COLORADO
Department of Public Health & Environment

Air Pollution Control Division

Technical Services Program

APPENDIX GM2

Standard Operating Procedure for the Determination of
Oxides of Nitrogen in Ambient Air

Page intentionally left blank

TALBE OF CONTENTS

1 Scope and Applicability 6
1.1 Introduction 6
1.2 Method Overview 6
1.3 Format and Purpose 6
2 Summary of Methods 6
2.1 Chemiluminescent Reaction of NO with O_3 6
2.2 NO, NO_x and NO_2 Determination 7
3 Definitions 8
4 Health and Safety Warnings 8
5 Cautions 9
6 Interferences 10
7 Personnel Qualifications 10
8 Apparatus and Materials 10
8.1 Monitoring Equipment 10
8.1.1 Analyzers 10
8.1.1.1 TAPI 200E / T200 10
8.1.1.2 200EU / T100U (Trace) 11
8.1.1.3 TAPI T200UP (Trace) 11
8.1.2 Instrument Shelter 11
8.1.3 Test Gas System 11
8.1.4 Data Acquisition System 12
8.1.5 Wiring, Tubing and Fittings 13
8.1.6 Reagents and Standards 13
8.1.7 Spare Parts and Incidental Supplies 13
8.2 Calibration Equipment 14
8.2.1 Calibration System 14
8.2.2 Accessories and Incidental Supplies 14
8.2.3 Reagents and Standards 15
9 Calibration 15
9.1 Introduction 15
9.2 Site Inspection 15
9.3 Calibration Procedure 16
9.3.1 Calibration Train Setup 16
9.3.2 Pre-calibration Zero, Span, and Precision Routine 17
9.3.3 Pre-Calibration Audit, Calibration Adjustment and Post-Calibration Assessment 18
9.3.3.1 Pre-Calibration Audit Procedure 18
9.3.3.2 Calibration Adjustment 20
9.3.3.3 Post-Calibration Assessment 22
9.4 Reporting and Filing of Calibration Results 24
10 Operation and Maintenance 25
10.1 Introduction and Description of Monitoring 25
10.2 Equipment and Supplies 26
10.3 Logs and Forms 26
10.4 General Operations 27
10.5 Routine Preventative Maintenance and Scheduled Activities 27

10.6 Maintenance Procedures 30
10.6.1 Disable/Enable Analyzer in Data Logger 30
10.6.2 Check Analyzer Calibrations Factors and Diagnostic Test Parameters Procedure 31
10.6.3 Filter Change Procedure 32
10.6.4 Internal Data Acquisition System Verification 33
10.6.5 Bottle Change Procedure 34
10.6.6 Leak Check Procedures 36
10.6.6.1 Determination of Sample Stream Leak 36
10.6.6.2 Determination of Calibration Solenoid Manifold Bank Leak 37
10.6.7 Time Change Procedure 37
10.6.8 Message to Central Procedure 38
10.6.9 Line change Procedure 39
10.6.10 Perform Manual Precisions 40
10.7 Calibration Standards 41

11 Handling and Preservation 42

12 Sample Preservation and Analysis 42

13 Troubleshooting 42
13.1 Environmental Factors 42
13.2 General Factors 42
13.3 Instrument Troubleshooting 42

14 Data Acquisition, Calculations, and Data Reduction 43
14.1 Data Acquisition 43
14.1.1 Primary Onsite Data Acquisition Systems 43
14.1.2 Secondary Onsite Data Acquisition Systems 43
14.1.3 Central Polling System 43
14.2 Calculations and Data Reduction 44
14.2.1 Zero Adjustment Methods 44

15 Computer Hardware and Software 44

16 Data Management and Records Management 45
16.1 Data Management 45
16.2 Records Management 45

17 Quality Assurance and Quality Control 45
17.1 Quality Assurance 45
17.1.1 Audits 46
17.1.2 Data Quality Assessment 46
17.2 Quality Control 46
17.2.1 Performance and Precision Tests 47
17.2.2 Calibrations 47
17.2.3 Documentation 47

18 Bibliography 48

TABLE OF TABLES

Table 1. Calibration Ranges for Oxides of Nitrogen Analyzers 20
Table 2. NO_2 Test Targets 26
Table 3. Routine Preventative Maintenance and Schedule Activities 28
Table 4. Internal Cross-Sectional Area for Teflon Tubing 39

TABLE OF FIGURES

Figure 1. NO / NO_2 / NO_x Calibration Setup 49
Figure 2. Typical zero-air supply system - TAP 701 50
Figure 3. Calibration/Audit Worksheet 51
Figure 4. Station and Met Log 55
Figure 5. NO_2 Log 56
Figure 6. Maintenance Report Form 57
Figure 7. Calculation of Moly Converter Efficiency 60

TABLE OF EQUATIONS

Equation 1. Percent Relative Error 18
Equation 2. Percent Relative Error 19
Equation 3. Relative Error at Full Scale 23

Standard Operating Procedure for the Determination of Oxides of Nitrogen in Ambient Air

1 SCOPE AND APPLICABILITY

1.1 Introduction

This standard operating procedure (SOP) document describes the procedures used by members of the Air Pollution Control Division (APCD) to operate continuous monitoring oxides of nitrogen ($NO/NO_2/NO_x$) analyzers at state of Colorado, Department of Public Health and Environment (CDPHE) air quality monitoring sites. This includes both standard and trace level analyzers at State and Local Air Monitoring Stations (SLAMS), special purpose monitoring (SPM) and NCore monitoring stations. The CDPHE uses the Teledyne 200E, 200EU, T200U, and T200UP analyzers in its air monitoring network and this SOP covers all these analyzers. The "oxides of nitrogen analyzer" term is synonymous with the "NO_x analyzer" term and may be used interchangeably throughout this SOP.

The Teledyne Advanced Pollution Instrumentation (TAPI) 200 series analyzers utilize gas phase chemiluminescence principle in the detection of oxides of nitrogen. Gas phase chemiluminescence has been designated as the reference measurement principle for the measurement of nitrogen dioxide (NO_2) in the ambient atmosphere. The 200 series analyzers may be calibrated with NO_2 from either the gas phase titration of nitric oxide (NO) with ozone (O_3) or from an NO_2 permeation device. These procedures are a supplement to APCD's Quality Assurance Project Plan (QAPP), the latest information published in the Code of Federal Regulations CFR), and the Operator's manual for TAPI 200E, 200EU, T200U, and T200UP analyzers.

1.2 Method Overview

The method for the determination of oxides of nitrogen has been widely used for almost 30 years. TAPI oxide of nitrogen analyzers which operate on a gas phase chemiluminescence principle initially attained federal equivalency designation in 1994, and the new trace level model designations attained in 2012. The lower detection limit (LDL) for a standard oxides of nitrogen analyzers (TAPI 200E, T200) reported by TAPI is 0.4 parts-per-billion (ppb) and for trace level analyzers (TAPI 200EU, T200U, T200UP) is 0.05 ppb. For reference, the primary nitrogen dioxide standard is the 98th percentile of 1-hour daily maximum concentrations, averaged three years to not exceed 100 ppb (40 CFR 50.11). An annual standard exists, and is the annual average of all 1-hour measurements that is not to exceed 53 ppb. The secondary standard is the same as the primary standard

1.3 Format and Purpose

The sequence of topics covered in this SOP follows 2007 EPA guidance on preparing standard operating procedures (SOPs). This method was also written to help field operators understand why (not just how) key procedures are performed. (US EPA, 2007)

2 SUMMARY OF METHODS

2.1 Chemiluminescent Reaction of NO with O_3

"The oxides of nitrogen analyzers measure the amount of NO present in the test gas by detecting the chemiluminescence which occurs when nitrogen oxide is exposed to ozone. In this reaction, one molecule of NO and one molecule of O_3 collide and chemically react to produce one molecule of oxygen (O_2) and one molecule of NO_2. Some of the NO_2 molecules created by this reaction retain excess energy from the collision and exist in an excited state, where one of the electrons of the NO_2 molecules resides in a higher energy state.

$$\boldsymbol{NO + O_3 \rightarrow NO_2^* + O_2}$$

The excited NO_2 molecule quickly returns to its ground state, releasing the excess energy. This release takes the form of quantum of light (*hv*) in the spectral region from 600 nm to 3000 nm, with a peak at about 1200 nm.

$$NO_2^* \rightarrow NO_2 + hv_{1200\,nm}$$

The relationship between the amount of NO present in the reaction cell and the amount to light emitted from the reaction is very linear. If more NO is present, more infrared light is produced. By measuring the amount on infrared light produced by the reaction the amount of NO present can be determined. Additionally, the excited NO_2 molecule can collide with other gases or the reaction cell walls and transfer its excess energy to this collision partner without emitting any light at all. This process is called third party quenching. The amount of third body quenching is directly proportional to the reaction cell pressure and is an unwanted process. Low reaction cell pressures are essential to the measurement of oxides of nitrogen." (Teledyne-API, 2013)

2.2 NO, NO_x and NO_2 Determination

The only gas that is measured by the chemiluminescent analyzers is NO. NO_2 contained in the gas is not directly detected because NO_2 does not react with O_3 to created chemiluminescence. Since NO_2 cannot be measured directly, NO_2 is converted to NO by passing the sample stream through a converter. The NO is then measured via the chemiluminescence reaction with ozone. The analyzer periodically switches the sample gas stream through the converter and alternately by-passing the converter. The NO_x measurement is attained while the sample gas is passing through the converter, and includes NO in the ambient air plus NO that was created by the converter from NO_2. The NO measurement is attained while the sample gas is by-passing the converter, and includes only NO in the ambient air. The difference between the NO_x response and the NO response results in the amount of NO_2 in the sample gas. The APCD uses analyzers with two different types of converters. (Teledyne-API, 2013)

<u>Molybdenum Converter:</u>
Molybdenum converters are used in the 200E, 200EU, T200 and T200U analyzers. "Sample gas is pulled through the converter that is filled with molybdenum (Mo, "moly") chips that are heated to a temperature of 315 ^oC. The heated molybdenum reacts with NO_2 in the sample gas and produces a NO gas and a derivative of molybdenum." (Teledyne-API, 2013)

$$xNO_2 + yMo \rightarrow xNO + M_yO_z \ (at\ 315\ C)$$

<u>Photolytic Converter</u>
Photolytic converters are used in the T200UP analyzer. The ultraviolet-based photolytic converter provides for a "true" NO_2 measurement. This means the photolytic converter selectively converts NO_2 to NO. NO_2 derived from the above method that utilizes a molybdenum converter does not result in a "true" NO_2 measurement because the converter does not selectively convert NO_2 only, but also converts other reactive oxides of nitrogen species to NO. NO_2 concentrations resulting from the molybdenum converter method contains NO_2 from the ambient air plus an unknown amount of reactive oxides of nitrogen species that survive the sample inlet and enter the analyzer.

Within the T200UP analyzer, sample gas passes through the photolytic converter chamber where it is exposed to blue light at specific wavelengths (350 – 420 nm) from an array of ultraviolet light-emitting diodes (LEDs). This selectively converts the NO_2 to NO with negligible radiant heating or interferences from gases. (Teledyne-API, 2013)

"Once the NO_2 in the sample gas has been converted to NO, it is routed to the reaction cell where it undergoes the chemiluminescence reaction. By converting the NO_2 in the sample gas into NO, the analyzer can measure the total NO_x content of the sample gas. Total NO_x = NO present + NO converted from NO_2. This is accomplished by switching the sample gas stream in and out of the photolytic converter every 6 – 10 seconds to obtain a quasi-continuous measurement of both NO and NO_x. Finally, the NO_2 concentration is not directly measured, but is calculated by subtracting the known NO content of the sample gas from the know NO_x content." (Teledyne-API, 2010)

3 DEFINITIONS

The CDPHE/APCD/TSP QAPP contains an appendix of acronyms and definitions. Any commonly used shorthand designations for items such as the sponsoring organization, monitoring site, and the geographical area will be defined and included in this SOP or in the QAPP Appendix P2.

4 HEALTH AND SAFETY WARNINGS

Chemical Hazards:

Purafil is used in the zero air generators to remove nitrogen oxide from air. Sodium permanganate is a component within Purafil and should be handled with care. Sodium permanganate is a known irritant and care should be taken to avoid exposure to open wounds, burns or mucous membranes. Prolonged exposure (usually over many years) to heavy concentrations of manganese oxides in the form of dust and fumes, may lead to chronic manganese poisoning, chiefly involving the central nervous system.

Compressed Gas Cylinder Hazards

Use and transport of NO gas cylinders are a major concern. Gas cylinders may contain pressures as high as 2000 pounds per square inch. Handling of cylinders must be done in a safe manner. If a cylinder is accidentally toppled and the valve breaks off, the cylinder can become explosive or a projectile.

- Make sure the cylinder is equipped with the correct regulator, for NO gas cylinders this is the stainless steel regulator with the Compressed Gas Association (CGA) 660 female connection. Do not use Teflon tape on threads connecting the regulator to the bottle. The regulator thread design allows for a tight seal and tape should never be used. Once the regulator is installed – provide a leak check using a proper leak check product.

- Inspect the regulator and cylinder valves for grease, oil, dirt, and solvent. Never use grease or oil to lubricate regulators or cylinder valves because they can cause an explosion.

- The cylinder should be placed so that the valve handle at the top is easily accessible.

- Only use wrenches or tools that are provided by the cylinder supplier to open or close a valve. Pliers should never be used to open a cylinder valve. Some regulators require washers; this should be checked before the regulator is fitted.

- Refer to MSDS for the gas being used for information regarding use and toxicity.

- Gas cylinders must be secured at all times to prevent toppling.

- Use appropriate material, such as chain, plastic coated wire cable, commercial straps, etc., to secure cylinders.

- Always place valve protectors on gas cylinders when the cylinders are not connected for use. Ensure that standing cylinders are strapped either to a transport cart or to a bottle rack, and NEVER standing while untethered.

- Cylinders must be protected from damage. Do not store cylinders near elevators or gangways, or in locations where heavy-moving objects may strike or fall on them.

- Cylinders must be stored where they are protected from the ground moisture to prevent rusting.

- Cylinders should be protected against tampering by unauthorized individuals.

- Sample and test gas should be delivered to the analyzer at atmospheric pressure. Ensure that the test gas is introduced to the sample stream through a tee where excess flow can be safely vented to the atmosphere.

- Do not completely empty the cylinder; always leave some residual pressure (200 psi).

- Transportation of cylinders is regulated by the Department of Transportation (DOT). It is strongly recommended that all agencies contact the DOT or Highway Patrol to learn the most recent regulations concerning transport of cylinders.

- Shipping of cylinders is governed by the DOT. Contact the DOT or your local courier about the proper procedures and materials needed to ship high pressure cylinders.

Electrical Hazards

1. Always use a third ground wire on all instruments.

2. If it is necessary to work inside an analyzer while it is in operation, use extreme caution to avoid contact with high voltage inside the analyzer. The analyzer has high voltages in certain parts of the circuitry, including a 110 volt AC power supply. Refer to the manufacturer's instruction manual and know the precise locations of these components before working on the instrument

3. Avoid electrical contact with jewelry. Remove rings, watches, bracelets, and necklaces to prevent electrical burns.

4. Always unplug the analyzer whenever possible when servicing or replacing parts.

5 CAUTIONS

To prevent damage to the equipment, the following precautions should be taken:

1. In the event that it is necessary to clean the optical bench, be careful to avoid damaging the interior of the sample chamber. Use extreme caution when cleaning or servicing the sample chamber(s). Be cautious while handling the analyzer. A drop could cause misalignment or damage to sensitive components.

2. Keep the interior of the analyzer clean. Clean the optical bench carefully to avoid damaging the interior of the bench, cleaning should be performed only if needed. Use cleaning procedures outlined in the manufacturer's instruction manual

3. Inspect the system regularly for structural integrity.

4. To prevent major problems with leaks, make sure that all sample and source/test gas lines are reconnected after required checks and before leaving the site.

5. Inspect tubing for cracks and leaks. Sample tubing and tubing within the analyzer may rest upon parts that vibrate, such as the air pump. Check the areas of the tubing where they come into contact with other parts for wear.

6. It is recommended that the analyzer be leak checked after replacement of pneumatic parts.

7. Ensure that all shelter electrical equipment is plugged into power strips and that the electrical load is properly balanced across the available circuits within the shelter.

8. Even low levels of nitrogen oxides can irritate your eyes, nose, throat, and lungs, possibly causing you to cough and experience shortness of breath, tiredness, and nausea. Exposure to low levels can also result in fluid build-up in the lungs a day or two after exposure. Breathing high levels of nitrogen oxides can cause rapid burning, spasms, and swelling of tissues in the throat and upper respiratory tract, reduced oxygenation of body tissues, a build-up of fluid in your lungs, and death. It is possible (and practical) to purchase multi-blend cylinders containing pollutant gases in addition to NO. If this is done, it is recommended that Material Safety Data Sheets (MSDS) for all cylinder gas components be made available to all staff members who use and handle the cylinders.

6 INTERFERENCES

It should be noted that the chemiluminescence method for detecting oxides of nitrogen is subject to interference from a number of sources. "The most common source of interferences is from gasses that cause third body quenching. Third body quenching occurs when other molecules in the reaction cell collide with the excited NO_2, causing the excited NO_2 to return to its ground state without releasing a photon of light. Quenching is an unwanted phenomenon and the extent to which it occurs depends on the properties of the collision partner. Larger, more polarized molecules such as H_2O and CO_2 are the most significant quenching interferents of NO chemiluminescence. Smaller less polar and electronically "harder" molecules such as N_2 and O_2 can cause interference, however, the concentrations of N_2 and O_2 are virtually constant in the ambient air measurements, and hence provide a constant amount of quenching that is accounted for in the calibration of the analyzer. All 200 series analyzers have been successfully tested for its ability to reject interference from most of these sources" (Teledyne-API, 2013).

7 PERSONNEL QUALIFICATIONS

General Personnel Qualifications are discussed in the CDPHE/APCD/TSP QAPP.

8 APPARATUS AND MATERIALS

8.1 Monitoring Equipment

8.1.1 Analyzers

8.1.1.1 TAPI 200E / T200

The Model 200E (also referred to as M200E) and the T200 Nitrogen Oxides Analyzer uses chemiluminescence detection, coupled with state-of-the-art microprocessor technology to provide the sensitivity, stability and ease of use needed for ambient or dilution continuous emission monitoring requirements of nitric oxide, nitrogen dioxide and the total nitrogen oxides (NO_x). The instrument: 1) Calculates the amount of NO present by measuring the amount of chemiluminescence given off when the sample gas is exposed to ozone. 2) Uses a catalytic-reactive converter that converts any NO_2 in the sample gas to NO, which is then measured as above (including the original NO in the sample gas) and reported as NO_x. 3) NO_2 is calculated as the difference between NO_X and NO.

Since the density of the sample gas effects the brightness of the chemiluminescence reaction, the 200 series analyzers software compensates for temperature and pressure changes.

Stability is further enhanced by an Auto-Zero-feature which periodically redirects the gas flow through the analyzer so that no chemiluminescence reaction is present in the sample chamber. The analyzer measures this, "dark" condition and uses the results as an offset, which is subtracted from the sensor readings recorded while the instrument is measuring NO and NO_X. The result gives a sensitive, accurate, and dependable performance under the harshest operating conditions.

The T200 series analyzer is the successor to the 200E series analyzers. The T200 series analyzer has the same analytical bench as the 200E series analyzers but includes an upgraded touch screen interface and processor that

allows for optimal networking within the analyzer and enables true Ethernet communications. The multi-tasking software in both types of analyzers gives the ability to track and report a large number of operational parameters in real time. These readings are compared to diagnostic limits kept in the analyzers memory and should any fall outside of those limits the analyzer issues automatic warnings.

Built-in data acquisition capability, using the analyzer's internal memory, allows the logging of multiple parameters including averaged or instantaneous concentration values, calibration data, and operating parameters such as pressure and flow rate. Stored data are easily retrieved through the serial port or optional Ethernet port via APICOM software or from the front panel, allowing operators to perform predictive diagnostics and enhanced data analysis by tracking parameter trends. Multiple averaging periods of one minute to 365 days are available for over a period of one year (Teledyne-API, 2010) (Teledyne-API, 2013).

8.1.1.2 200EU / T100U (Trace)

The TAPI 200EU/T200U analyzers operate on the same principle as the above described TAPI 200E and T200 analyzers with several notable exceptions. 1) The 200EU and T200U analyzers are more sensitive at low NO_x levels than the standard 200E and T200 analyzers. The instruments have low level full scale ranges that are appropriate in a trace level environment (0-5 ppb). 2) The reaction cell is gold plated. In addition there is a pre-reactor, which accounts for the measurements of any hydrocarbon interferents in the sample stream. 3) The sample flow rate is 1000 mL/min. 4) The analyzers are equipped with a high performance pump, capable of producing a reaction cell pressure of less than 5 in Hg absolute (Teledyne-API, 2010) (Teledyne-API, 2013).

8.1.1.3 TAPI T200UP (Trace)

The TAPI T200UP analyzers operate on the same principle as the above described TAPI T200 analyzers with several notable exceptions. 1) The analyzer has better speciation for lower NO_2 levels than a standard T200, due to the inclusion of a UV bases photolytic converter. 2) The photolytic converter includes a Teflon cell with reflective properties that increase the overall conversion efficiency. 3) The reaction cell is gold plated. In addition there is a pre-reactor, which accounts for the measurements of any hydrocarbon interferents in the sample stream. 4) The sample flow rate is 1100 mL/min. 4) The analyzers are equipped with a high performance pump, capable of producing a reaction cell pressure of less than 5 in Hg absolute, which increases the effectiveness of the chemiluminescent reaction (Teledyne-API, 2013).

8.1.2 Instrument Shelter

A shelter is required to protect the analyzer from precipitation and adverse weather conditions, maintain operating temperature, and provide security and electrical power. The following are operational shelter temperature requirements for the SLAMS (US EPA, 2013) and NCore networks (US EPA, 2005).

SLAMs: 5-40 °C (20-30 °C preferred) at <± 2 °C Standard Deviation over 24 hours.
SLAMs: 41-104 °F (68-86 °F preferred) at <± 3.6 °F Standard Deviation over 24 hours

NCore: 20-30 °C, daily changes in hourly temperature should not exceed ±5 °C over a 24-hour period.
NCore: 68-86 °F, daily changes in hourly temperature should not exceed ±9 °F over a 24-hour period.

8.1.3 Test Gas System

The APCD uses TAPI Advanced Pollution Instrumentation (TAPI) Model 700 series dynamic dilution calibration systems to create concentrations of NO by diluting high concentration NO gas from National Institute of Standards and Technology (NIST) traceable compressed gas cylinders. The onsite test system that introduces known test gas concentrations to select NO_2 analyzers does so by blending known concentrations of test gases with diluent air having zero concentration of the test analyte. The NO_2 test gas is generated from NO gas using the gas-phase titration function within the 700 dilution calibrator (GPT). The principle of GPT is based on the rapid gas-phase reaction between NO and O_3 that produces stoichiometric quantities of NO_2 as shown by the following reaction:

$$NO + O_3 \rightarrow NO_2 + O_2$$

If the initial and final NO concentrations for this reaction are known, resulting concentration of NO_2 can be determined. Ozone is added to excess NO in the dilution calibrator, and the NO channel of the chemiluminescent analyzer detects the change in NO concentration. After the addition of O_3, the observed decrease in NO concentration is equivalent to the concentration of NO_2 produced. The concentration of NO_2 generated may be varied by increasing or decreasing the concentration of O_3 produced by a stable O_3 generator (Teledyne-Monitor Labs, 2009).

For details on the operation of the calibration system, refer to the API Operator's Manual and to the SOP Appendix GM7 in the Air Pollution Control Division (APCD) Quality Assurance Project Plan (QAPP.) The compressed gas cylinders at the site are single-blend mixtures of the target analytes in a nitrogen balance. The zero air at the site is produced by pumping room or outside air through an Advanced Pollution Instruments (API) model 701 zero air module. For removal of interferences, the air is also passed through a Purafil/charcoal scrubber system. All gas must be delivered to the instrument at atmospheric pressure.

This system is enhanced by the use of the station data logger to control the span and precision process and data collection in the same manner if performed on site, remotely, or automatically. This standardizes the test process and reduces process errors. Data logger control of tests and data averaging allows test results to be reported by the data logger to a central computer. To provide the desired span/precision concentration, pre-programmed sequences are stored in the dynamic dilution calibrator. These sequences are subsequently triggered by the station's data logger through a series of contact closures or by the activation of modbus coils.

8.1.4 Data Acquisition System

The APCD employs three different models of onsite, data acquisition system equipment (DAS) in the operations of its air monitoring network. These are the ESC 8816 data logger, the ESC 8832 data logger, and the Agilaire 8872 data logger. The 8816 model is the oldest type of data logger in the network and is a predecessor to the 8832 and 8872 data loggers. The following are descriptions of these data loggers.

ESC 8816 Data Logger

The ESC Model 8816 Data System Controller is a microprocessor-based data acquisition system designed to acquire, process, store, report, and telemeter data in a multi-tasking environment. The 8816 is designed around an expansion bus that gives the user great flexibility in configuring the unit with a combination of analog and serial input and output (I/O) types.

For more details, refer to APCD's Data logger SOP or the individual operator manuals (Environmental Systems Corporation, 2001).

ESC 8832 Data Logger

The ESC Model 8832 Data System Controller is a microprocessor-based data acquisition system designed to acquire, process, store, report, and telemeter data in a multi-tasking environment. The 8832 is designed around an expansion bus that gives the user great flexibility in configuring the unit with almost any combination of input and output types. It is the successor to the 8816 data logger and is more robust in numerous areas. Of significance is expanded memory, faster processing speeds, faster communication speeds, remote Ethernet communications and polling and Modbus enabled communications with peripheral devices.

For more details, refer to APCD's Datalogger SOP or the individual operator manuals (Environmental Systems Corporation, 2006).

Agilaire 8872 Data Logger

The Model 8872 is a Windows-based data logger, a departure from the earlier 8816 / 8832 embedded systems designs. The 8872 includes a number of hardware and software features to ensure that the device matches the field reliability of the 8832, while offering the convenience of a Windows-based platform and integration with Agilaire's AirVision software.

The core of the 8872 is a fan-less PC, typically 2 GB of RAM. The device can be equipped with a 160 GB standard hard drive or, more commonly, a 64 GB solid state flash drive (SSD). For all digital versions of the 8872, the remainder of the enclosure simply provides convenient universal serial bus (USB), serial, and VGA I/O connections in a standard 3U rack mount enclosure, a form factor similar to the 8816 / 8832 family. However, the 8872 also supports traditional analog/discrete I/O via a variety of internal I/O modules and a protection / connector board to provide familiar detachable terminal block connections to the back. The layout of the connections is designed to make the unit easy to use as a 'drop in' replacement for an 8816 or 8832. (Agilaire, 2013)

For more details, refer to APCD's Datalogger SOP or the individual operator manuals.

8.1.5 Wiring, Tubing and Fittings

Teflon™ and borosilicate glass are inert materials that should be used exclusively throughout the ambient air intake system. It is recommended that Polytetrafluoroethylene (PTFE) or Fluoroethylpropylene (FEP) Teflon™ tubing and fittings be used. FEP Teflon is the best choice for sample lines and the connection between an intake manifold and the bulkhead fitting because of its inertness and lower costs. All fittings and ferrules should be made of Teflon™. Connection wiring to the DAS should be shielded two-strand wire for analog communications and properly shielded RS-232 serial cable or Cat5 or higher Ethernet cable for digital communications.

8.1.6 Reagents and Standards

A reagent is a substance or compound used to bring about a chemical reaction. The TAPI 200 series analyzers utilize a built-in ozone generator to react with NO to initiate the chemiluminescence reaction. Additionally, the built in molybdenum converter utilizes molybdenum chip to catalyze the reaction of NO_2 to NO. Replacement of these converters is performed on an as needed basis. All gas calibration and quality control test gas concentrations for the $NO/NO_2/NO_x$ method are obtained by dynamic dilution of gas from cylinders whose contents are traceable to National Institute of Standards and Technology (NIST) Standard Reference Material (SRM) gases via Environmental Protection Agency (EPA) Protocol procedures.

8.1.7 Spare Parts and Incidental Supplies

Information regarding spare parts and incidentals can be found in the following sections of each of the below listed analyzer's operators manual.

TAPI 200E: See Chapter 13 (Preventive Maintenance), Chapter 14 (Troubleshooting) and Appendix B (Spare Parts) in the TAPI "Technical Manual – Model 200E Nitrogen Oxide Analyzer, P/N 04410" for specific maintenance and replacement requirements.

TAPI 200EU: See Chapter 4 (Spare Parts) in the TAPI "Manual Addendum – Ultra Sensitivity Model 200EU $NO/NO_2/NO_x$, P/N 05385" for specific maintenance and replacement requirements.

TAPI T200: See Chapter 11 (Preventive Maintenance) and Chapter 12 (Troubleshooting and Repair) in the TAPI "Operation Manual - T200 Nitrogen Oxide Analyzer, P/N 06858" for specific maintenance and replacement requirements.

TAPI T200U: See Chapter 6 (Spare Parts List) in the TAPI "Manual Addendum to Ultra Sensitivity Model T200U $NO/NO_2/NO_x$", P/N 006861" for specific maintenance and replacement requirements.

TAPI T200UP: See Section 6 (Maintenance and Service) in the TAPI "Operation Addendum to Model T200UP Photolytic Nitrogen Oxide Analyzer, P/N 07450" for specific maintenance and replacement requirements.

8.2 Calibration Equipment

8.2.1 Calibration System

See **Error! Reference source not found.**.

- Dilution gas calibrator (Teledyne-API, 2009).
    - The calibrator must have mass flow controllers for dilution air with flow from 0.0 – 10.0 liters per minute (Lpm) and NO cal gas at 0 – 100Lpm, with these flows as the minimum full scale ranges. (Mesa Laboratories, MK01-26 Rev H)
    - The calibrator must have a mixing chamber for dilution air and calibration gas flows.
    - Replaceable outlet particulate filter.
    - Clean air pack with particulate filter.
    - Permeation dryer, Indicating Silica gel or Calcium Carbonate.
- Certified NO calibration gas cylinder bottle(s) traceable to a NIST standard via EPA Protocol 2. Pre-dilution concentrations used are usually approximately 10 - 20 ppm in a balance of nitrogen and air.

8.2.2 Accessories and Incidental Supplies

- External flow meter system capable of measuring flows of 10 - 10000 cc/min.
    - All flow measurement systems are to be certified by the manufacturers against references traceable to an NIST standard.
- Digital thermometer measuring to tenths of a degree Celsius. It is periodically referenced against an in-house mercury thermometer that is traceable by the manufacturer to a NIST standard (use only if manual dilution calculations are performed).
- Hand held barometer measuring to tenths of an inch Hg. It is periodically adjusted against the in-house digital barometer standard that is traceable by the manufacturer to a NIST standard (use only if manual dilution calculations are performed).
- Digital voltmeter (DVM) with a 0 - 1 volt range. It is periodically referenced against the in-house voltage standard, which has NIST traceability.
- Connecting lines made of 1/4" OD Teflon.
- Teflon™ is an inert material that should be used exclusively throughout the calibration system. It is recommended that Polytetrafluoroethylene (PTFE), Fluoroethylpropylene (FEP) Teflon™ or Perfluoroalkoxy (PFA) tubing be used. They are all equally effective, however (FEP) Teflon™ is the most cost effective solution.
- Calibration sheet (**Error! Reference source not found.**).

- TAPI 200EU manual. Each station must have a permanent copy.

8.2.3 Reagents and Standards

Certified NO calibration gas cylinder bottles are traceable to a NIST standard via EPA Protocol 2. Pre-dilution concentrations used are usually between 10 or 50 ppm in a balance of nitrogen and air.

9 CALIBRATION

9.1 Introduction

The calibration of a gaseous analyzer centers on introducing known concentrations of a pollutant to the analyzer and adjusting the analyzer so that its readings accurately represent those concentrations (US EPA, 2013). An overview of the calibration process is given below.

1. Summary of Calibration Procedure: Site Inspection (section 9.2):

    a. General inspection of the station shelter.

    b. General inspection of all measurement and recording instruments, along with the NO_x analyzer, to see if they are working properly.

    c. Minor maintenance on the shelter or instruments if required and within the scope of the cal worker's resources. If any of the analyzer operational parameters are out of specification or nearing being out of specification from the station log sheet target values, the calibration should be halted so repairs and/or major maintenance can be performed prior to calibration.

2. Calibration Procedure (section 9.3):

    a. A pre-calibration auto span and precision routine is run (section 9.3.2).

    b. A pre-calibration audit point at the precision level using the calibration equipment is introduced, plus calibration zero, to the NO_x analyzer (section 9.3.3.1, Pre-Calibration Audit Procedure).

    c. Performance of any minor maintenance on the analyzer if required and within the scope of the calibration specialist's resources. If major repairs are needed, the calibration should be halted so that this can be done before any calibration.

    d. Adjustment of the analyzer's responses so that they accurately reflect introduced known concentrations of $NO/NO_2/NO_x$ (section 9.3.3.2, Calibration Adjustment).

    e. Introduction of five known concentrations of each of the three parameters (NO, NO_2, NO_x), plus zero air, in order to characterize the calibrated NOx analyzer's response curves (section 9.3.3.3, Post-Calibration Assessment).

    f. Determination of the automated zero, span, and precision values (section 9.3.3.3, in Post Calibration Assessment).

3. Calculation, recording, and reporting of results.

9.2 Site Inspection

A site inspection is conducted every time a calibration specialist goes to a monitoring station to calibrate, audit, or perform any other kind of calibration unit operation.

The inspection routine includes the following actions:

1. Check that any water drop (if present), and sample lines are not dirty or show condensation.

2. Check that all monitors' operational parameters such as pressure, temperature, and sample flow look normal compared to the values recorded on their calibration stickers and station log sheets. Refer to an analyzer's manual and station NO_2 log sheet for allowable ranges for each of its diagnostic parameters. If any parameter on any analyzer is out of bounds then the monitoring technician should be notified that day. Maintenance should be performed by the calibration specialist if possible, and a calibration on the analyzer may be necessary afterwards.

3. Check that the station temperature high/low readings are within a range of 20 - 30 °C (68-86°F).

4. Check the station logs for non-routine actions.

5. Check that all gaseous analyzers and meteorological (met) sensors appear to be reading ambient values that are reasonable given outside conditions and past readings for that individual station. This is done by looking at the real time data logger readings. For the gaseous analyzers, make sure their front panel readings match those on the data logger. For specifics on using the data logger refer to data logger SOP appendix in this QAPP document.

6. If you need to access the data logger functions through one or more login codes (codes are required) and aren't sure if you're authorized for access, call either the supervisor or the monitoring technician to see if you are. If you know that you are authorized, but have forgotten the login codes, call key contact personnel within the GMM unit for the codes. Key contact people within the GMM unit are posted within every monitoring station.

7. If present, visually check that the meteorological tower's instrument crossbar is properly aligned. Check that the meteorological sensors aren't damaged and are moving without binding.

8. Check that the station structure is not damaged.

9. Check that all analyzer clocks and digital chart recorder clocks agree with the data logger and that they are showing the proper time (**Error! Reference source not found.**). If any change is made to a device then log the action, date and calibration specialist's initials in the relevant log. For changes to the data logger clock consult first with GMM supervisory or data management staff.

10. Check that all pumps are running smoothly and are not overly hot to the touch. Check also that exhaust lines between the pump and the analyzer are not rubbing on the pump, which can lead to a hole being worn in the line.

11. Perform a leak check on the analyzer that is to be calibrated (10.6.6).

If anything is found out of the ordinary it is to be recorded in the relevant log, along with the date and the calibration specialist's initials. The station's monitoring technician is notified that day (or another monitoring technician of the GMM unit if that person is not available). Maintenance should be performed if appropriate and within the scope of the calibration specialist's resources.

9.3 Calibration Procedure

9.3.1 Calibration Train Setup

1. Connect the clean air supply directly to the zero air input of the calibrator (**Error! Reference source not found.**).

2. Before the NO cal gas cylinder is connected to the calibrator, its line and regulator must be purged at least three times. This is done in order to remove all ambient air from the regulator. (Ambient air in the regulator can dilute the NO and bias the calibration results and introduce ambient contaminants that interact with the NO.) The following describes the line and regulator purging action:

    a. Open the regulator and cylinder valves. The closed quick connect will keep the cal gas from escaping

    b. Close the cylinder valve.

    c. Push the end of the quick connect nozzle against a clean, flat surface to partially release the pressure within the regulator and line. Carefully watch the two regulator gauges and do not let either of them fall to zero. A positive pressure compared to ambient must be kept so that room air will not surge back into the line and regulator. To stop the release of cal gas, pull the quick connect nozzle away from the flat surface.

    d. Repeat Steps a through c two times.

    e. Open the cylinder valve to recharge the regulator and line to full pressure as indicated by the two regulator gauges.

3. After purging, connect the NO cal gas regulator line directly to the cal gas input of the dilution calibrator. Adjust delivery pressure between 20 to 30 psi.

4. Connect a Teflon line to the exit port of the transfer standard calibrator. The length of this line should be of sufficient length to reach from the transfer standard (TS) calibrator to the back of the station (Stat) calibrator or the station NOx analyzer. This is the transfer standard calibrator supply line (supply line). Leave this other end of this line unconnected end for now.

5. The introduction of test gas to the analyzer can be performed in one of two ways depending upon how the station calibrator is configured for the nightly performance tests. The transfer standard calibrator should be configured similarly to the station calibrator if possible. If the station calibrator is configured to introduce test gas through the probe (TTP) then the transfer standard calibrator should be configured likewise. The same is true if the station calibrator is configured to the back of the analyzer (BOA). In most situations the site calibration line can be removed directly from the back of the station calibrator and connected to the transfer standard calibrator output line with a Teflon union. If the a solenoid manifold is used external to the station calibrator to direct test gas TTP to individual analyzers, then it is acceptable to connect the transfer standard output line to the station TTP calibration line on the output side of the solenoid. Simply disconnect the TTP calibration line from the output side of the solenoid and connect it to the transfer standard output with a Teflon union. This method eliminates the need to activate the solenoid for the entire length of the calibration. An exception to the above methods is if the station calibrator is connected directly to a calibration port on the back of the analyzer. In this situation the sample line is removed from the sample inlet port on the back of the analyzer and the transfer standard output line is connected directly to the sample inlet port through the use of a Teflon tee. A 12” (or >) length of clean Teflon is connected to the empty leg of the tee that will be used as a vent to bleed off excess test gas that is introduced to the analyzer by the transfer standard calibrator to prevent back pressure in the analyzer.

9.3.2 Pre-calibration Zero, Span, and Precision Routine

This routine is done before there is adjustment to the analyzer to help correlate the preceding automatic zeros and spans (z/s) and precisions (p) with the pre-calibration audit responses. It is also done at the end of the calibration

procedure to generate new official z/s/p values for the following sampling period until the next calibration. In practice these routines are started just before and after any calibration / audit to allow time to set up or tear down the calibration equipment while they run their course.

If the analyzer is communicating with the data logger over an analog connection, connect a digital volt meter (DVM) or digital chart recorder to the analog output of the monitor or the analog input of the data logger according to ease of accessibility. This step should not be performed if the analyzer is communicating with the data logger over a digital connection (GSI or Modbus).

1. Take the $NO/NO_2/NO_x$ analyzer channels offline. (10.6.1)

2. Start an automatic precision/zero routine. This is done by a command through the data logger (10.6.10). Allow this routine to run fully until its automatic ending. During the run make sure that all concentration readings ($NO/NO_2/NO_x$) from the front panels of the station calibrator and NOx analyzer match the numbers seen in the data logger. Record the final reported numbers on the calibration (cal) sheet. A precision is done is done before a span because the NOx analyzer is more sensitive to conditioning effects at this level, and the purpose of the pre-cal precision is to emulate the midnight precisions as closely as possible. Note that there will be two parts to the precision proper, a NO/NOx component without titration to assess those two channels, and then a titration of the NO gas to NO_2. The span will also have these two components.

3. Start an automatic span/zero routine as done with step two with the precision. If a second auto zero is not needed, the automatic span/zero routine can be aborted through the data logger after the span phase is finished; but if done so, the last five minute readings of the station calibrator and analyzer during span must be manually averaged as no report will be provided by the data logger.

4. Zero-correct the data logger precision span test level (t) results for all channels ($NO/NO_2/NO_x$).

$$t - zero\ value = zero\ corrected\ test\ level\ (zct)$$

5. Calculate the percentage relative error (%RE) of the two zct's and record on the calibration sheet.

Equation 1. Percent Relative Error

$$\frac{zct - \ true[NO, NO_2, NO_x]^*}{true[NO, NO_2, NO_x]^*} * 100\% = \%RE$$

*True [NO,NO_2,NO_x] is the concentration of the test gases as reported by the station calibrator through the data logger. True [NO_2] is determined by the difference in NO between the NO only phase and the gas phase titration phase.

The pre-calibration span and precision plus station zero can also be run manually through the data logger, but the calibration specialist must be careful to emulate automatic phase times so that conditioning effect differences between previous midnight auto spans and precisions and this pre-calibration span and precision can be minimized. For some diagnostic purposes a manual running of the precision and span is sometimes more useful and practical than using the automatic routines. The manually triggering of relays through the data logger is non-routine and the procedure to perform this task is not included in this SOP. Contact the Data Manager to attain information on how to perform this task.

9.3.3 Pre-Calibration Audit, Calibration Adjustment and Post-Calibration Assessment

9.3.3.1 Pre-Calibration Audit Procedure

<u>Introduction</u>

From the transfer standard calibrator set up introduce zero and precision levels (including a separate titrated NO_2 precision level) test gas to the analyzer. Calculate %RE for the zero corrected precision level results. If this exceeds +/- 10 %RE, follow with a full five point (intervening with five titrated NO_2 levels) plus zero calibration assessment audit (the same as a post-calibration assessment in method below) before any adjustment is made to the analyzer. This assessment audit is the same as described below in section 9.3.3.3 Post-Calibration Assessment. This is to characterize the out-of-spec condition fully, and the information will be used during data validation.

If the analyzer fails the five point assessment audit then repairs and calibration of the instrument are done as soon as possible after the audit. If the repairs required are beyond the resources of the calibration specialist then the monitoring technician for that station is notified immediately. Proceed to the calibration adjustment procedure in Section 9.3.3.2 if the pre-calibration audit results less than +/- 10 %RE. Failed pre-calibration assessment audits require an electronic message in the data logger that will to be use for data validation purposes. The procedure for performing the pre-calibration audit is given below.

<u>Procedure</u>

1. Generate a zero point (Level 5) from the transfer standard calibrator. If a TAPI 700x calibrator with certified MFCs is used then simply request the desired NO/ NO_2 concentration level or ZERO point. Refer to the calibrator's operating manual for procedures on how to generate manual concentrations from the calibrator (Teledyne-API, 2009).

2. Let the zero dilution airflow in the calibrator stabilize. This should usually take less than five minutes.

3. Connect the transfer standard calibrator to the analyzer's inlet system. This connection can be made several ways depending upon how the station calibrator is configured with the inlet system. Please see Section 9.3.1 Step 5 for a more detailed description of the setup options.

4. Send zero air through the probe to the analyzer from the transfer standard calibrator. Be sure that excess supply flow at the probe is 10 to 50% greater than analyzer flow (compare total flow readings on the analyzer and transfer standard calibrator).

5. Allow at least five minutes after the analyzer has stabilized. Record the NO,NO_2,NO_x results on the calibration sheet. This is the pre-calibration zero air concentration reading.

6. Generate a test precision concentration of NO that is approximately 20-85 % higher than the desired NO_2 concentration. Precision levels are typically between 10 and 20% of the calibration range of the analyzer. The MFCs in the transfer standard calibrator should not be used below 10% or above 90% of their full scale for older TAPI 700xs. Some of the newer MFCs in newer TAPI 700xs are capable of using an upper range of 99% of their full scale, but if in doubt use the more restrictive range when generating a concentration while keeping in mind that an excess of gas must be provided to the probe. Record the NO,NO_2,NO_x results on the calibration sheet.

7. Titrate from this NO precision the NO_2 precision level immediately afterwards. NOTE: When titrating from a given NO level, do not leave less than 20% or more than 80% of the original NO concentration. This will minimize back reactions between NO and NO_2. Allow at least five minutes after a stable response from the analyzer is achieved. Record the NO,NO_2,NO_x results on the calibration sheet. Apply a zero correction to the raw results.

   Calculate the relative error of the analyzer's response

   Equation 2. Percent Relative Error

$$\frac{Analyzer\ Reading/\ (DAS) - \ true[NO, NO_2, NO_x]}{true[NO, NO_2, NO_x]} * 100\% = \%RE$$

8. Percent relative error is determined for each channel on the analyzer (NO,NO_2,NO_x). If the precision level error for each channel is < +/- 10% RE a full assessment audit is not required, proceed to 9.3.3.2. If it equals or exceeds +/-10%RE, follow with a full four point plus zero calibration assessment audit (the same as a post-calibration assessment in section 9.3.3.3 below) before any adjustment or repairs are made to the analyzer. This is to characterize the out-of-spec condition fully, and the information will be used during data validation. Additionally, if the assessment fails, documentation of this failure in a Message to Central is required as described in Section 9.3.3.3 Step 10.

9.3.3.2 Calibration Adjustment

Introduction

After the pre-calibration audit, the analyzer is adjusted (calibrated) at the zero and precision level so that the analyzer most closely matches the known concentrations produced by the calibration system. After this is done, a five level plus zero multipoint calibration assessment (9.3.3.3) is reintroduced to characterize the analyzer response over the entire measurement range. The calibration points are generated by diluting a higher concentration of NO from a NIST-traceable calibration gas to a target concentration. The recommended ranges for the multi-point calibration points are detailed in Table 1. As each calibration point is generated, the responses shown by the data logger should be compared to the calibrator value.

Table 1. Calibration Ranges for Oxides of Nitrogen Analyzers

Units	**Parts per billion (ppb)**	**Parts per billion (ppb)**
Calibration Scale	0 to 1000 ppb	0 to 500 ppb
Compressed gas cylinder	15-25 ppm*	15-25 ppm*
*** Based on calibrator mfc ranges: gas1 = 50mL/min, gas2 = 100 mL/min, dil = 10 or 20 L/min**		
Calibration points		
Level 1	750-1000 ppb	350-500 ppb
Level 2	500–750 ppb	250–350 ppb
Level 3	250–500 ppb	150–250 ppb
Level 4	50–250 ppb	50–150 ppb
Level 5 - zero	0 ppb	0 ppb

Level 4 is the accepted precision level that is used to adjust the calibration of the analyzer with as little error as possible (along with Level 5, or the zero level).

9.3.3.2.1 Molybdenum Converter Models

1. To start the analyzer calibration adjustment, introduce zero air again to the analyzer and let the chart trace stabilize.

   If any of the three channels do not display zero for the concentration reading, on the analyzer's front panel press CAL. ZERO will appear. Press this. Display concentration will go to 0.000. This is the calibration adjustment of the zero level.

2. Generate another precision level and introduce to the analyzer again. Let the chart trace stabilize.

3. TAPI 200x: Press Cal. CONC will appear. Press this. NO SPAN CONC: XXX.X CONC will appear. Using buttons, input NO and NO_x precision concentration as displayed by the transfer standard calibrator. Press ENTER. This is the calibration adjustment of the precision level.

   TAPI 200E: To auto calibrate analog outputs go to DIAG menu, then ANALOG I/O CONFIGURATION. Press ENTER. On AOUTS CALIBRATED menu, press ENTER. A YES signal will show auto calibration completed. To adjust analog output offsets, from ANALOG I/O CONFIGURATION menu, press ENTER.

4. Press SET until CONC_OUT_X:1V, CAL (where X=output channel under adjustment) appears. Press EDIT. Press SET until CONC_OUT_X REC OFS:O mV appears. Press EDIT and then enter channel offset value in mV

5. Send zero air again to the analyzer. Let it stabilize for at least five minutes. Readjust the zero display value if necessary and repeat steps 1,2 and 3 and then come back to this step. Several jumps between the zero air and the precision level, along with calibration adjustments, may be required.

6. If the NO_x channel changes from its untitrated level during an NO_2 input during titration, then the analyzer's electronic Converter Efficiency (a correction constant in memory) may need to be adjusted. Send about a 60%full scale NO into the analyzer and note the NO_x reading. Off of this same high level NO concentration, titrate a high level NO_2 (keeping in mind the 15 and 85% titration constraints). Note how much the NOx channel changes. In the analyzer's CAL menu go to the NO_2 CONC. Take the real time NO_2 reading and correct this by how much the NO_x channel changed between no-titration and titration. (e.g. if the NO_x channel went up 3ppb during titration, then correct the real time NO_2 reading by subtracting 3ppb from it) Enter this corrected NO_2 value in the NO_2 CONC field and press ENTER. The new Converter Efficiency will be calculated automatically and a new correction constant stored in memory. NOTE: if the new CE is less than 97.5% as read in the menu, then the calibration will need to be stopped and maintenance on the analyzer performed.

7. Steps 1 thru 6 can be repeated if the calibration settings from the initial calibration or subsequent calibrations are not sufficiently accurate. This is accomplished by independently sending zero air and known test gas concentrations (10 to 20% of calibration full scale) to the analyzer to assess the accuracy of the calibration. If the results are not optimal, repeat steps 1 thru 6. Several jumps between the zero air and the test gas, along with calibration adjustments, may be required. Record the calibration results on the calibration sheet.

9.3.3.2.2 Photolytic Converter Models

1. To start the analyzer calibration adjustment, introduce zero air again to the analyzer and let the chart trace stabilize.

2. If any of the three channels do not display zero for the concentration reading, on the analyzer's front panel press CAL. ZERO will appear. Press this. Display concentration will go to 0.000. This is the calibration adjustment of the zero level.

3. Generate another precision level and introduce to the analyzer again. Let the chart trace stabilize.

4. Press Cal. CONC will appear. Press this. NO SPAN CONC: XXX.X CONC will appear. Using buttons, input NO and NO_x precision concentration as displayed by the transfer standard calibrator. Press ENTER. This is the calibration adjustment of the precision level.

5. Press SET until CONC_OUT_X:1V, CAL (where X=output channel under adjustment) appears. Press EDIT. Press SET until CONC_OUT_X REC OFS:O mV appears. Press EDIT and then enter channel offset value in mV

6. Steps 1 thru 5 can be repeated if the calibration settings from the initial calibration or subsequent calibrations are not sufficiently accurate. This is accomplished by independently sending zero air and known test gas concentrations (10 to 20% of calibration full scale) to the analyzer to assess the accuracy of the calibration. If the results are not optimal, repeat steps 1 thru 5. Several jumps between the zero air and the test gas, along with calibration adjustments, may be required. Record the calibration results on the calibration sheet.

7. If the NO_x channel changes from its untitrated level during an NO_2 input during titration, then the analyzer's two (A and B) electronic Converter Efficiency settings may need to be adjusted. The A CE is the low level correction factor for converter efficiency, and the B CE is for the high part of the range.

8. Send about a 60%full scale NO into the analyzer and note the NO_x reading. Off of this same high level NO concentration, titrate a high level NO_2 (keeping in mind the 15 and 85% titration constraints). Note how much the NOx channel changes.

9. Take the real time NO_2 reading and correct this by how much the NO_x channel changed between no-titration and titration. (e.g. if the NO_x channel went up 3ppb during titration, then correct the real time NO_2 reading by subtracting 3ppb from it)

10. Enter this corrected NO_2 value into the NO_2 B menu of the CAL>CONC>CONV menu and press ENTER. Exit to SETUP and allow the readings to stabilize.

11. Press the CALB button in the CAL>CONC>CONV menu.

12. Press CAL and then ENTER. This is the actual calibration adjustment, and Point B CE value should have changed. Press EXIT until back to the SETUP menu.

13. Deliver a low level NO in the precision range to the analyzer. Note the NOx as before, and then titrate a precision level NO_2 off of this. Find a corrected NO_2 as before from the change in the NOx value.

14. Enter the corrected NO_2 value calculated into the NO2A menu of the CAL>CONC>CONV menu and press ENTER. Exit to SETUP and allow the readings to stabilize.

15. Press the CALA button in the CAL>CONC>CONV menu.

16. Press CAL and then ENTER. This is the actual calibration adjustment, and Point A CE value should have changed. Press EXIT until back to the SETUP menu.

9.3.3.3 Post-Calibration Assessment

Introduction

The post-calibration assessment challenges the analyzer with five different test gas concentrations levels plus a zero to evaluate the accuracy of the new calibration. The assessment begins with a zero point followed by points at<20% (Level 4 - precision), >80% (Level 1 - span), ~60% (Level 2), and ~40% (Level 3). Results for these tests are used to evaluate the relative error at full scale. Concentration levels are generated as described in the pre-calibration assessment (9.3.3.1). Note: Generated NO concentrations should be at least 20% greater than the desired NO_2 target concentrations. This is to allow for a 20% NO residual that is required during the gas phase titration phase. It is acceptable to generate and evaluate the NO/NO_x channel at concentration levels slightly higher than the desired NO_2 concentration levels. The procedure for performing the post-calibration assessment is given below.

Procedure

1. Generate zero air and deliver it to the analyzer. Record zero air results and all following test points for each analyte (NO,NO_2,NO_x) on the calibration sheet.

2. Generate an NO tests gas concentration at >20% above the NO_2 Level-4 precision target concentrations range and introduce it to the analyzer. Note results for all analytes. Follow this by the generation an NO_2 test gas concentration at the Level-4 precision target concentration using gas phase titration. Note results for all analytes.

3. Repeat Step 2 for the Level-1, Level-2 and Level-3 test gas concentration ranges as describe in Table 1 above.

4. Send a final zero air to the analyzer and record the results. Calculate a least-squares linear regression between the known NO concentrations (including the zero point) as the ordinate and the zero corrected analyzer responses as the abscissa. Perform the same regression for the NO_2 and NO_x analytes. Record slope, intercept, and correlation coefficient on the calibration sheet. Also calculate, using this response curve, a %REFS for a calibrated analyzer response given a known introduced concentration of exactly 90% of the full measurement range of the analyzer.

5. The criteria for a successful calibration is where all non-zero test points after the calibration adjustment show a <+/-2% full scale error from the final best fit regression calibration line. The precision level should be as close to 0% error as possible. If the post-calibration assessment begins to show a failure at any point, and repeating previous analyzer adjustments do not solve the problem, then maintenance is probably needed for the analyzer.

   Equation 3. Relative Error at Full Scale

$$\frac{[(90\%\ full\ scale * m) + i] - 90\%\ full\ scale}{90\%\ full\ scale} * 100 = \%REFS$$

   where:

   m = slope of response curve.
   i = intercept of response curve.
   90% full scale = 900 ppb (calibration full scale 0-1000 ppb)
   = 450 ppb (calibration full scale 0-500 ppb)

   %REFS = Relative Error at Full Scale

6. Reattach the station calibrator's supply line back to its solenoid valve on the span panel.

7. Do another zero, span and precision routine like the one done before the calibration (Section 9.3.2). Record results on the calibration sheet and on the calibration sticker. These are the z/s/p values at time of calibration.

8. Record analyzer parameters, especially the new analyzer calibration settings (slope, offset), from the front panel display on the calibration sticker and sheet.

9. Enable the $NO/NO_2/NO_x$ channels (**Error! Reference source not found.**). Record the MST time the instrument was brought back on line on the calibration sheet and on the station NO_2 log. Put the calibration sticker on a surface near the analyzer so that it is easily read.

10. Enter the calibration results in a "message to central" (10.6.8). On the data logger message window to Central type and send:

700 read, NO sp=xxx, pr=xxx
(these are the Stat calibrator's readings when doing an NO span and precision)

200 read, NO sp=xxx, NOx sp=xxx, NO pr=xxx, NOx pr=xxx
(these are the analyzer's NO and NOx readings during untitrated span and precision)

200 read Titr, NO2 sp=xxx, NOx sp=xxx, NO2 pr=xxx, NOx pr=xxx
(these are the analyzer's NO_2 and NO_x readings during titrated span and precision)

Plus type the calibration specialist's initials and any comments that are felt relevant such as non-routine actions or maintenance done.

This is a message through the data logger to the GMM unit worker responsible for tracking calibrations in the ZSPTracking database. This message is permanently stored in the AirVision system and information from this message is manually inputted into the ZSPTracking database.

In the event of a failed precalibration audit or assessment, a separate message is sent to Central in the form of

NOx CAL FAILED AUDIT,

(in all CAPS) followed by a general description in regular text and the calibrator's initials. This is to highlight important cal/audit information for the purposes of data validation.

11. Record analyzer parameters and calibration and maintenance actions on the station NO_2 log.

9.4 Reporting and Filing of Calibration Results

The results of a calibration or assessment audit are recorded and reported by the calibration specialist as follows (this is a summary; some of these actions have already been mentioned):

1. Record analyzer parameters, calibration and maintenance actions, cal date, beginning/ending disabled time and calibration specialist's initials on the station logs.

2. Record the calibration and audit points, linear regression results, cal date and calibration specialist's initials and relevant comments on the Calibration Report form (**Error! Reference source not found.**), and the Calibration database (if available). If possible and if the required computer and software are available, download the data stored in the analyzer's own internal data logger.

3. Any unusual thing seen at a station, even if rectified by the calibration specialist, is reported that day to the monitoring technician and recorded in the station logs.

4. Record uncorrected data logger and chart z/s/p results, analyzer calibration settings, cal date and calibration specialist's initials on the station sticker.

5. File data logger z/s/p results into the data logger (see Section 9.3, Step 10 above). These can be accessed at any time by the home office.

6. Put the calibration sheet with all of the calibration information, beginning/ending disabled time, cal date and calibration specialist's initials into the specially designated ring binder at the home office. Each year of calibrations and assessment audits has its own binder. The most recent four to five years of calibration and audit sheets are kept at the home office. Older binders are put into permanent storage.

7. When the calibration specialist is at the home office, the Calibrations database forms (if available) on their field PCs will be uploaded to the Technical Services' J:Drive Master Calibration database on a monthly or less than monthly basis.

10 OPERATION AND MAINTENANCE

10.1 Introduction and Description of Monitoring

The APCD Technical Services Program (TSP) uses exclusively TAPI model 200E, 200EU, T200U, and T200UP oxides of nitrogen instruments. In 2000 the TSP began replacement of its older technology TECO Model 42A ambient oxides of nitrogen analyzers with newer TAPI 200E instruments. In 2013, the TSP began using TAPI T200U trace level instruments in new sites, including Denver's NCore site. Some factors influencing the installation of trace level analyzers are:

- federal requirements to use trace level instrumentation at NCore monitoring sites
- diminishing ambient concentrations require the use of trace level analyzers to achieve higher accuracies at lower concentrations

The two main operator manuals for these analyzers, are the 200E and the T200 manuals. These analyzers are the base models for the 200 series analyzers. Specialized models, such as the trace-level analyzers, that are built upon the base model will have operator manuals that are addendums to the base model. Specifically, addendum manuals exist for the 200EU and T200U trace level analyzers, the 200EU-NO_y analyzer and the T200UP photolytic analyzer. These manuals are complete and cover all necessary procedures for their operation. There is a manual accompanying its respective analyzer at each site and at the central offices of TSP. For the ESC AQM-8816, AQM-8832 and Agilaire 8872 data loggers, the manufacturer's technical manuals provide all operating instructions and system keyboard command descriptions. These manuals are also available at each site, with each manual accompanying its respective analyzer, and at the central offices of TSP. Refer to these manuals regarding any aspect of operation of these systems.

Each continuous NO_2 monitoring site is assigned to a specific TSP employee qualified by formal training, experience, TSP on-the-job training, and courses offered by EPA. This employee is responsible for all aspects of assigned site monitoring operation, including but not limited to maintenance, repair, documentation updates, logs, etc. In addition to keeping sites operational with a minimal downtime, any of the senior level instrument specialists may be called upon to accept the responsibility for training of new TSP employees and contracted operators.

In the current monitoring network all of the gaseous analyzers have some capacity to store data through an internal Data Acquisition System (iDAS). iDAS provides a backup of data by storing it on the analyzers internal memory. As a result TSP considers the data acquired by the site data logger system, when properly validated, to be the primary data source and iDAS data as an emergency data backup system. The iDAS system can also be use as a troubleshooting tool if properly configured.

Data quality and validity determinations are based partly on quality control (QC) data produced from onsite test systems. An "Onsite Test System" is a system of control hardware, software and standards at the monitoring location that is capable of accurately generating and introducing known concentrations of test gas to a monitoring system. These onsite test systems are capable of performing "Performance Tests" and "QC Precision Tests". The different tests are used to assess and document different aspects of system performance and data quality. A "Performance Test" is an automated or manual evaluation of a monitoring system's performance and is achieved through the introduction of a known concentration of test gas, typically at the span or precision level, and is not intended to be submitted to EPA for determinations of bias. A "QC Precision Test" is a manual check initiated by APCD staff, who can attest to its validity, and is achieved through the introduction of a known concentration of test gas at the precision level and whose purpose is to be submitted to EPA for determination of bias. "Performance Tests" and "QC Precision Tests" are inherently different and are initiated by different sequences within the data logger. These sequences consist of phases that can vary in concentration, order, and duration.

For NO_2, test concentrations are listed below.

Table 2. NO_2 Test Targets

	Span	**Precision**
Diluted EPA protocol	~300-400 ppb	~70 ppb

The APCD uses three different types of onsite test systems within the air monitoring network, one of which is used in the oxides of nitrogen air monitoring network. The explanation of this onsite test system is as follows.

Diluted EPA protocol test gas system

The test gas and a zero-air source are connected to a dynamic dilution calibrator, which then connects to the analyzer. The onsite test system that introduces known test gas concentrations to select NO_x analyzers does so by blending known concentrations of test gases with diluent air having zero concentration of the test analyte. The NO_2 test gas is generated from NO gas using the gas-phase titration function within the 700 dilution calibrator (GPT). The principle of GPT is based on the rapid gas-phase reaction between NO and O_3 that produces stoichiometric quantities of NO_2 as shown by the following reaction:

$$NO + O_3 \rightarrow NO_2 + O_2$$

If the initial and final NO concentrations for this reaction are known, resulting concentration of NO_2 can be determined. Ozone is added to excess NO in the dilution calibrator, and the NO channel of the chemiluminescent analyzer detects the change in NO concentration. After the addition of O_3, the observed decrease in NO concentration is equivalent to the concentration of NO_2 produced. The concentration of NO_2 generated may be varied by increasing or decreasing the concentration of O_3 produced by a stable O_3 generator.

A bottle of high concentration of NO test gas and a source of diluent gas are connected to a TAPI model 700dilution calibrator containing two or more calibrated mass flow controllers. The dilution calibrator is then instructed to generate a known concentrations of NO and NO_2 test gas, using the dilution calibrators GPT function, to feed a solenoid manifold configured to allow the gas to the sample inlet of the analyzer at atmospheric pressure. The combination of the NIST traceable test gas and the calibrated mass flow controllers provide sufficient confidence in the calculated concentrations. This system is ideal for monitoring stations with span and precision requirements that are not otherwise achievable by the non-diluted EPA protocol test gas system, such as when a target concentration is lower than available test gas bottle concentrations. As with the non-diluted EPA protocol system, this system is enhanced by the use of the station data logger to control the span and precision process and data collection in the same manner if performed on site, remotely, or automatically. This standardizes the test process, while reducing process errors. Data logger control of tests and data averaging allows test results to be collected and reported by the central computer.

10.2 Equipment and Supplies

For a complete listing of supplies and equipment please see Section 8 of this standard operating procedure.

10.3 Logs and Forms

All actions at the site, scheduled and non-scheduled, are logged on forms. These forms are collected monthly, reviewed and filed together in monthly folders in a maintenance files cabinet. Three complete calendar years of forms are readily available on site. The intent of these forms is to be able to recreate events and actions well after the fact. Examples of these forms can be found at the end of this subsection.

The forms in routine use are:

1. MONTHLY STATION/MET ACTIVITIES LOG (Figure 5)
2. MONTHLY NO_2 ACTIVITIES LOG (Figure 6)
3. MONTHLY MAINTENANCE REPORT FORM (Figure 7)

10.4 General Operations

This section provides an overview of scheduled inspection and preventive maintenance procedures. To minimize downtime and ensure data quality, preventive maintenance is to be performed on all gaseous monitors in the network according to a schedule established by the TSP, using the inspection criteria documented in this chapter. Below is a general summary of the types of maintenance checks performed.

Data from each site is evaluated daily. There is a daily morning review of overnight performance tests results, data validity flags, data completeness, data representativeness, logger messages, and shelter environmental status to determine if an immediate site visit is needed. Data loggers are contacted as needed to evaluate and configure instrument systems.

The Weekly inspection is performed once each calendar week and as needed.

Performance tests and QC precision tests are performed at prescribed intervals. Performance tests are automatically performed every night and QC precision tests are manually performed once every two weeks and are to be reported as the regulatory required bi-weekly QC precision test.

The Monthly inspection is performed on or near the beginning of each calendar month.

Upon completion of an inspection, log entries onto the STATION/MET log, NO_2 TAPI 200 log, and into a “message to central” are required. Enter all tasks performed, and note any malfunctions or other actions needed or discovered during the inspection.

All scheduled checks are minimum requirements. Individual site circumstances may dictate a more frequent preventative maintenance schedule. Monthly, quarterly, and semi-annual inspections are always conducted by TSP-approved staff that has the training or experience to reliably perform the required checks or maintenance.

By contract agreement, it is the responsibility of all contracted site operators to notify TSP of any unusual instrument/equipment performance, possible malfunction, or outright malfunction, and action taken, if any. TSP in turn will take the appropriate action as soon as workload and priorities permit. TSP monitoring technician will summarize work performed in a “message to central” for all non-scheduled maintenance activities.

10.5 Routine Preventative Maintenance and Scheduled Activities

Preventive maintenance inspections and services should follow the recommended intervals by the EPA, the manufacturer, or as determined by actual experience. If preventive maintenance services are not being done according to the minimum guidelines of the manufacturer as set forth in this standard operating procedure, the TSP may jeopardize any claim to a manufacturer’s warranty and may jeopardize the validity of the data collected. The preventive maintenance inspections are scheduled to provide an opportunity to detect and repair damage or wear conditions before major repairs are necessary and the loss of data occurs. The documentation of these activities is essential for QC tracking and for compliance with EPA’s Quality Systems methods. Site and analyzer log sheets along with “messages to central” are part of the official record and the documentation of maintenance or observations are to be written clearly and concisely and in accordance with good laboratory practices.

Table 3. Routine Preventative Maintenance and Schedule Activities

Procedure or Resource	Description
Every Onsite Visit	
	Check station for general condition and proper operation of heating, air conditioning, lighting, and sample pumps.
10.6.2	Check all analyzers for faults and operability. Verify that the data logger is working correctly and reported values match the analyzer display.
Figure 2	If equipped, observe the operating condition of zero air pack. Check for faults and short cycling.
	Remove trash when waste receptacles are full. Remove from shelter all odorous trash, such as leftover food and food packaging.
10.6.8 Figure 5 Figure 5. Station and Met Log	Leave a "message to central" and a site log entry summarizing purpose of visit and a summary of any significant findings or maintenance performed.
Weekly Inspection / Maintenance	
	Perform Every Onsite Visit inspection as defined above.
	Perform general housekeeping as necessary. Includes sweeping station as necessary. Dispose of trash as necessary. Clean up trash and remove weeds/vegetation from surrounding property.
Figure 6	Note analyzer operational and diagnostic parameters on analyzer log sheets. • Check results from previous night's Performance Test and record ppm levels on Analyzer Log Sheet • Using the log sheet as guidance, record the analyzer calibration factors and analyzer diagnostic test parameters on analyzer log sheet.
	Check analyzer $NO/NO_2/NO_x$ readout, data chart trace (if equipped) and data logger NO2 readout for agreement. Verify agreement between devices is within ±1 ppb.
10.6.6	Inspect and empty water drop out system, (if equipped) – note on analyzer log sheet if water found. If flask is removed, perform a leak check after reassembling the system.
10.6.3	Inspect sample filter and replace once every 2 weeks at a minimum. If the sample filter is dirty, a change frequency of greater than once every 2 weeks is permissible. Leak check analyzer after filter change.
	Visually inspect the sample line inlet. Ensure the Teflon inlet shroud in place and free from insects and debris. Clean if necessary.
	Enter notes and initial analyzer log sheet

Procedure or Resource	Description
Figure 5. Station and Met Log	Log all bottle gas supply pressures on station log sheet
Figure 5. Station and Met Log	Log station maximum & minimum temperatures on station log sheet and reset thermometer if available.
Figure 5. Station and Met Log	Enter notes and initial station log sheet
10.6.8	Leave a "message to central" and a site log entry summarizing purpose of visit and a summary of any significant findings or maintenance performed.
Every Two Week Period	
10.6.10	Perform a manual Quality Control Precision Test – Performed by APCD staff (Ref 17.1.1)
Monthly Inspection / Maintenance	
	Perform Weekly Inspection/Maintenance as defined above.
	Check associated power strips, wiring, power cables, and source and analyzer lines and fittings for wear, damage and proper installation. Ensure all power loads are evenly distributed across all building circuits.
	Inspect analyzer fan filters and clean as necessary (if equipped).
10.6.7	Check analyzer and Data Charts times against a National Institute of Standards and Technology traceable time piece (i.e. cell phone) and adjust if (>± 2 min) see analyzer manual or clock procedure. For changes to a data logger clock contact GMM supervisor or central PC staff first.
10.6.4	Check that the internal data acquisition program in the analyzer or the data chart is operational.

Procedure or Resource	Description
10.6.3 **10.6.6**	Replace sample filter. Leak check the analyzer.
10.6.6.2	Perform leak check of test gas manifold solenoid/s (if equipped)
Figure 5 **Figure 6**	Fill out new monthly station, analyzer, and calibrator (if equipped) log sheets for the upcoming month. The format of log sheets change over time. Follow the format of the current log sheet and be sure to include the following key elements: • Analyzer log sheet – site name, month, year, analyzer range and analyzer firmware, analyzer SN and other appropriate info required by log sheet • Station log sheet - site name, month, year, bottle numbers, expiration date, concentration and pressure and other appropriate info required by log sheet • Calibrator log sheet - site name, month, year, model, firmware, SN and other appropriate info required by log sheet
	Upon completion of the Monthly Maintenance site visit, all previous months log sheets are collected and placed in the monthly forms data collection box within 2 business days of being collected.
Quarterly Inspections / Maintenance	
	None Required
Six Month Inspections / Maintenance	
	Inspect and clean the sample probe weather cap once every 6-months and when the sample line is replaced. Inspect the first 6" of sample line and calibration line for cleanliness. If dirty, trim 6" off the beginning of the line.
Annual Inspections / Maintenance	
	Inspect and clean Heating, Ventilation and Air Conditioners (HVAC) units at site. Inspect for water access holes in the shelter, roof, and sides. Ensure AC unit is sealed against moisture on the shelter wall. • Perform maintenance in June or July • Replace or clean air conditioning and/or heater dust filters (if equipped) • Clean air conditioner coils
10.6.9	In March or April, replace all sample lines. Through the probe (TTP) calibration lines are to be replaced once every three years (2015, 2018, 2021, ect…). On years when the TTP calibration lines are not replaced, trim 6" off the inlet side of the calibration line.
Error! Reference source not found.	Perform annual maintenance as prescribed in the service manual and perform a complete "moly" converter efficiency check.
40 CFR Appendix B to part 136	Perform Method Detection Limit (MDL) testing on NCore trace analyzers (reference CFR Method). These tests are only required at the NCore site (LaCasa) and is the responsibility of the site operator to perform these tests.

10.6 Maintenance Procedures

10.6.1 Disable/Enable Analyzer in Data Logger

<u>ESC 8816/ 8832</u>

Disable analyzer data channel:

From the top level menu, to disable a data channel from reporting to the data logger, the user must:

1. Choose menu options **CDM** (**C Configuration Menu** > **D Configure (Data) Channels** > **M Disable/Mark Channel Offline)** to view the list of available channels.

2. From the keyboard, using the down arrow button, scroll to the target channel name and hit the **Enter** or **Return** key. For $NO/NO_2/NOx$, select the respective choices. A limited list of channels that could be encountered includes:

Channel Option	Instrument or Analyzer / Channel
O_3	Ozone Analyzer
O_3 Cal	Ozone Calibrator
CO	Carbon Monoxide Analyzer/Calibrator
CO_Trace	Carbon Monoxide Trace Level Analyzer/Calibrator
NO	Nitrogen Oxide Analyzer
NO_2	Nitrogen Oxide Analyzer
NO_x	Nitrogen Oxide Analyzer
NO_y	NOY Analyzer
SO_2	Sulfur Dioxide Analyzer

3. Next, hit the **Esc** (Escape) key twice to get back to top level menu.

4. Select menu option **DF** (**D Real-Time Display Menu** > **F Display Readings w/flags**) to ensure the proper machine was disabled. You should see the letter "D" within parenthesis and adjacent to the targeted channel indicating it has been disabled.

Enable analyzer data channel:

From the top level menu to enable the data channel to resume reporting to the data logger, the user must:

1. Choose menu options **CDE** (**C Configuration Menu** > **D Configure (Data) Channels** > **E Enable /Mark Channel Online)** to view the list of available channels.

2. From the keyboard, using the down arrow button, scroll to the target channel name, and hit the **Enter** or **Return** key.

3. If all machines/instruments and/or channels are already on line, the user will receive a message stating "No channels are offline" at the bottom left screen. Otherwise a list of channel names will appear.

4. Next, hit the **Esc** key twice to get back to the top level menu.

5. Select menu option **DF** (**D Real-Time Display Menu** > **F Display Readings w/flags**) to ensure the proper channel was enabled. You should see parenthesis adjacent to the targeted channel without the letter "D" inside indicating the machine/instrument channel is enabled and reporting to the data logger.

<u>Agilaire 8872</u>

Disable analyzer data channel:

1. After logging in to AirVision , if the Site Node Logger Toolbox is not open, from the top level menu select the **Home** tab > **Utilities** > **Site Node Logger Toolbox** > then select the **Channels** tab.

2. Identify the channel to be disabled. At the right side of the form, under the "Disabled" heading, click on the row with the target channel name. This action will change the channel state from "False" to "True" indicating that it is now disabled and not reporting to the data logger.

Enable analyzer data channel:

1. After logging in to AirVision , if the Site Node Logger Toolbox is not open, from the top level menu select the **Home** tab > **Utilities** > **Site Node Logger Toolbox** > then select the **Channels** tab.

2. Identify the channel name to be enabled. At the right side of the form, under the "Disabled" heading, click on the row with the target channel name. This action will change the channel state from "True" to "False" indicating that it is now enabled and will now report to the data logger.

10.6.2 Check Analyzer Calibrations Factors and Diagnostic Test Parameters Procedure

All criteria pollutant analyzers contain a list of test parameters which provide health status and active measurements. Test parameters have an allowable operating range specified on the log form. Monthly and weekly logging activities require verification and recording of these parameters.

On the NO_x analyzer front panel are two function buttons, **< TST** and **TST >**, as shown in the below figure. The **TST >** button allows the operator to step down through the parametric value list, while the **< TST** button allows transition up through the list. Both buttons cycle back to their start point.

Not all analyzer parameters are required on the log form. Changes occur to the form when a parameter is added or removed. Newer analyzers also have slightly different parameters, or different orders. A matrix of NO_2 analyzer parameters and respective log entries follow:

Analyzer Parameter	**Log Form Parameter**
SAMP FLW	Sample Flow
OZONE FL	Ozone Flow
HVPS	HVPS
RCELL TEMP	R Cell Temp
BOX TEMP	Box Temp
PMT TEMP	PMT Temp
MOLY TEEMP	Converter Temp
RCEL	R Cell Pressure
SAMP	Sample Pressure
SLOPE (NO/NOX)	Slope (NO/NOx)
OFFSET(NO/NOX)	Offset (NO/NOx)
TIME	Clock
(NA)	Filter
(NA)	Leak Check
(NA)	iDas Data Check

During monthly or weekly inspections complete the log form as outlined below:

1. Hit the, **TST** > button to find the first value on the log form.

2. Sequentially record each value requested by the log form.

3. At "Clock" field, verify analyzer time is within 2 minutes of data logger time. If not, correct the time (10.6.7).

4. Change the filter per according to schedule (10.6.3).

5. Perform a leak check on the analyzer according to schedule (10.6.6).

Once finished logging, ensure analyzer is in "Sample" mode (see figure below for T series analyzers,). "Sample" indicates analyzer is in the normal ambient air sampling mode.

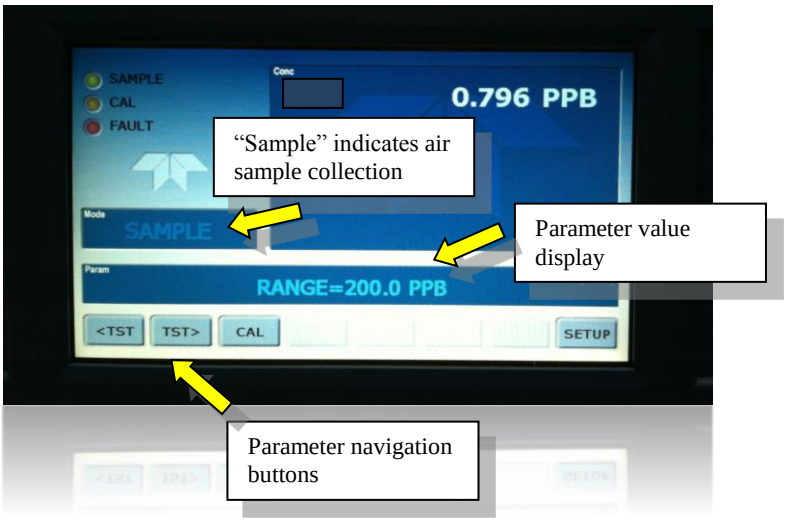

10.6.3 Filter Change Procedure

1. Disable the NO, NO_2, NO_x channels from data logger (10.6.1)

2. Remove filter glass casing (analyzer front panel door) Place it upside down on flat surface, still containing the glass.

3. With tweezers, remove old filter and security ring from housing. Place ring on glass to keep clean.

4. Position a new 1um filter in filter housing using tweezers for filter, and also to place security ring over filter.

5. Gently hand-tighten filter holder being careful to keep glass centered. If not centered, lens will chip or break when casing is tightened!

6. Inspect lines and fittings for seal.

7. Perform leak check from back of analyzer (10.6.6).

8. Enable NO/NO_2/NO_x channel on data logger (10.6.1).

10.6.4 Internal Data Acquisition System Verification

The purpose of this procedure is to ensure that the internal data logging capabilities of the analyzers are functioning properly. The procedure was taken from the TAPI NO_2 analyzer manuals.

TAPI Analyzers

To verify internal data logging:

1. Access the internal data stored on the analyzer through the front panel: **SETUP > DAS > VIEW**, refer to Figure 1 below for menu structure

2. Verify data is stored by selecting the first data channel and pressing **VIEW,** then press **PV10** several times to view whether data was stored since the last data acquisition verification was performed

3. Press **EXIT > NEXT > VIEW > PV10** to verify data in the other data channels

4. At a minimum, verify one parameter for each data channel

5. Continue to press **EXIT** until the analyzer returns to the sample mode

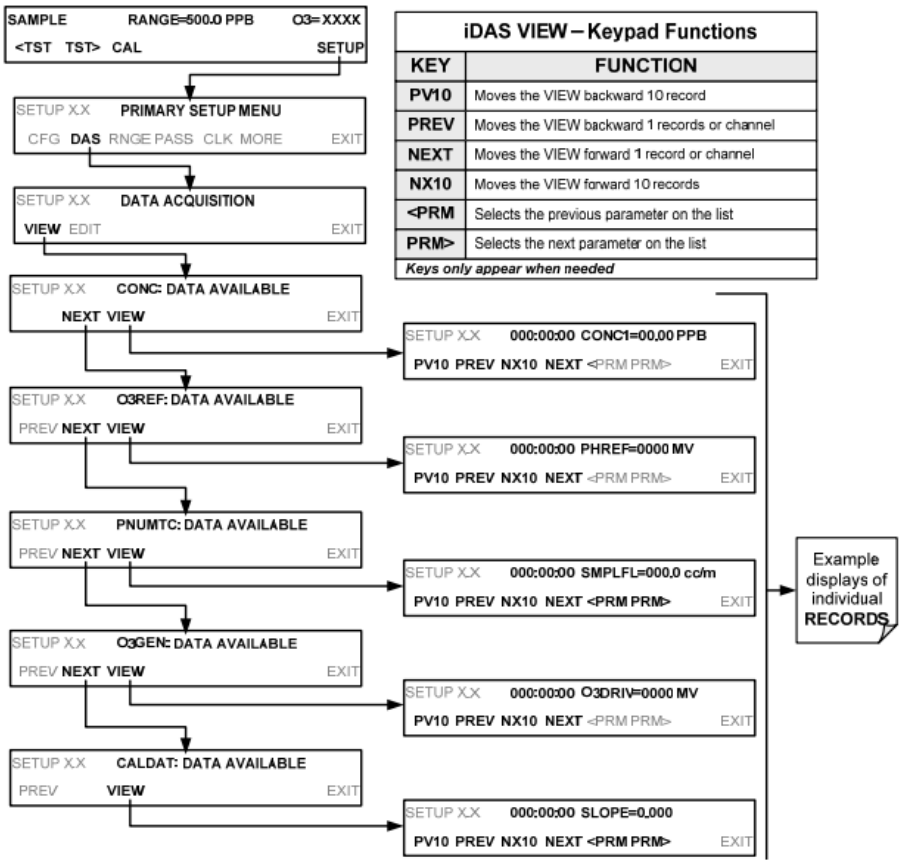

iDAS VIEW – Keypad Functions	
KEY	**FUNCTION**
PV10	Moves the VIEW backward 10 record
PREV	Moves the VIEW backward 1 records or channel
NEXT	Moves the VIEW forward 1 record or channel
NX10	Moves the VIEW forward 10 records
<PRM	Selects the previous parameter on the list
PRM>	Selects the next parameter on the list
Keys only appear when needed	

TAPI iDAS menu structure

6. If data is not being stored, notify appropriate personnel

7. Fill out the required data acquisition verification entry on the Monthly log sheet

10.6.5 Bottle Change Procedure

1. Make note of the pressure left in the old bottle (psi).

2. Close the old gas bottle valve (clockwise turn).

3. Remove the gas line from the back of the dilution calibrator for NO, SO_2 and some CO; most CO cylinders are connected directly to the analyzer.

4. Inspect the line and fittings and replace as necessary.

5. Remove the two-stage regulator from the gas bottle.

6. For 660 CGA stainless regulators install a new Teflon washer onto the stem connection.

7. Connect the regulator to the new gas bottle.

8. If replacing the regulator, move the calibration gas line from the old to the new regulator.

9. Purge the regulator and line:

    a. Using a quick connect with a push stop or your thumb over the end of the gas line, cap the gas line closed.

    b. Back off the regulator pressure knob, and close the regulator valve.

    c. Open the gas bottle valve until the bottle-side pressure gauge reads the bottle psi.

    d. Once the bottle-pressure gauge reads the bottle pressure, quick close the gas bottle valve. It is important to quickly open and close the bottle valve to eliminate any back diffusion of air captured in the regulator connections back into the bottle.

    e. Open the regulator valve and the gas line until the regulator gauges go to zero psi.

    f. Close the regulator valve and the gas line.

    g. Repeat for a total of three times

10. Connect the gas line back to the appropriate gas port on the back of the dilution calibrator or analyzer (if applicable), vent gas out of the line before tightening the fitting to ensure that gas is flowing through the line.

11. Set the regulator pressure to 30psi and ensure that the gas bottle valve and regulator valve are open, if connected to a calibrator verify that the gas pressure is within the required range.

12. Make note of the bottle change on the station log and record the new bottle number, gas type, concentration, expiration date and pressure.

13. Send two messages to central through the data logger (10.6.8)

    a. The first message will consist of the designation of “old”, old bottle number, concentration(s), expiration date, and current bottle pressure. Note: Most nitrogen oxide bottles will report a concentration for both NO and NO_x, report both values.

    b. Use the following format.

i. **Bottle Change Old FF40348 NOx 9.89 NO 9.74 07/29/16 600**

c. The second message will consist of the designation of "new", **new** bottle number, concentration(s), expiration date, and current bottle pressure.

d. Use the following format.

i. **Bottle Change New FF55716 NOx 9.81 NO 9.9 07/29/16 1000**

e. Substitute the labels"SO_2", "CO" for "NO, NOX" as needed in the messages.

14. Enter the new bottle concentration into the 700 calibrator if different than old bottle

a. On the 700 calibrator, press Setup > Gas > Cyl > Port(n) where n is the appropriate port number 1-4 connected to the gas bottle

b. On the 700 calibrator, make sure the displayed analyte is the correct bottle. Press Edit and use the keys to enter the new concentration. The units can be changed if necessary but under normal circumstances it should stay the same.

c. When finished, press Enter (or Exit to cancel) and press exit enough times to return to the main screen.

10.6.6 Leak Check Procedures

The purpose of this procedure is to provide guidance on determining the presence of a leak in the sample stream. The sample stream can consist of the analyzer, a water drop-out, and a sample line. This procedure also outlines how to determine if the sample manifold on a dynamic dilution calibration check system is leaking.

10.6.6.1 Determination of Sample Stream Leak

1. Disable analyzer channels on data logger (10.6.1).

2. On the front panel of the analyzer view the sample pressure parameter using the TST > key

3. Cap the sample stream. Either:

a. Disconnect the sample line and cap the sample inlet on the back of the analyzer (analyzer leak check).

b. Or cap the end of the water drop-out furthest from the analyzer (water drop-out leak check).

c. Or cap the end of the sample line (sample stream leak check).

4. After several minutes, when the pressures have stabilized, note the SAMP (sample pressure) and the RCEL (Vacuum pressure) readings.

a. If both readings are equal to within 10% and less than 10 in-Hg-A within 2 minutes, the instrument is free of large leaks.

b. If pressure is not reached within 5 minutes, leak check has failed, troubleshoot or seek assistance from an APCD gaseous monitoring technician.

c. If the instrument has passed the above criteria, it is still possible that the instrument has minor leaks.

d. If both readings are < 10 in-Hg-A, the pump is in good condition.

e. A new pump will create a pressure reading of about 4 in-Hg-A at sea level.

5. Uncap the sample stream by reverting steps taken in step 3.

6. Enable analyzer channel on data logger (10.6.1).

7. If the leak check fails, leave a message for central detailing findings, actions taken, and initials (10.6.8).

10.6.6.2 Determination of Calibration Solenoid Manifold Bank Leak

1. Using the data logger, energize the solenoid that allows gas to escape to the room (usually labeled as the dump solenoid).

   a. On an 8832, from the main screen select D > O (Display > Outputs) and scroll to the appropriate digital output. Press C for closed (O will open) – in this case the C and O refer to the circuit and C means "energize" while O means "de-energize".

   b. On an 8872, in the Site Node Logger Toolbox, switch to the Digital Outputs tab and click the State button in the row with the Dump Solenoid. The State button will change from OPEN to CLOSED indicating the circuit is energized.

2. On the 700, generate zero air at 2-3 Lpm while watching the pressure needle on the solenoid manifold.

   a. Press the "Gen" button

   b. Press the "Auto" button

   c. Press the "Species" button until "zero" appears (it may read $CO/SO_2/NO$, etc). The "Species" button selects the type of gas the dilution calibrator will generate. The factory default selection when entering into this menu is typically "zero".

   d. Press Enter

   e. Adjust the total flow to between 2 and 3 Lpm and press enter

3. When the pressure needle reaches > 20 (but preferably less than 30) psi, put the 700 into Standby mode.

   a. It is normal for the pressure needle on the manifold to drop when putting the 700 into Standby. Use the post-drop number for this test.

4. Watch the pressure needle for 2 minutes. A drop of less than 5 psi over 2 minutes indicates there is no sufficient leak.

   a. If a drop of < 5 psi occurs in 2 minutes, the leak check has passed.

   b. If a drop of > 5 psi occurs in 2 minutes, troubleshoot the manifold or the 700 (the leak could be in either in this test) or contact the site operator.

5. Revert steps taken in step 1 to de-energize the dump solenoid.

6. If leak check fails, leave a message for central detailing findings, actions taken, and initials (10.6.8).

10.6.7 Time Change Procedure

The following describes the standard procedure to change the time on the TAPI NO_2 Analyzer and the Data Chart. First compare the Analyzer/Data Chart's time with the Data logger, if it is out of the +/- 2 minute specification, then adjust the Analyzer/Data Chart's time. Check the Data logger's time with cell phone time, if it is significantly off, contact the Data Manager.

Important Note! – All times on data loggers and analyzers are to be set to Mountain Standard Time and do not adjust for daylight savings. Data logger and analyzers clocks should appear to be running 1 hour late from March to November (daylight savings time period, clocks move one hour forward). Reference a calendar or other source to determine the exact and end dates of daylight savings.

TAPI Gaseous Analyzer

This procedure was taken from the TAPI NO_x analyzer manual. For any time changes done to the analyzer make a note on the analyzer log sheet.

1. Using the **TST >** keys toggle to the TIME Display and determine whether a time change is necessary.

2. If the time needs to be adjusted, from the home menu press: **SETUP** > **CLK** > **TIME**

3. Toggle the numbers up or down to get the correct time

4. Press ENTER

5. EXIT to the home menu

6. Make a note on the NO_x log sheet of the time change

Data logger

If the clock on a data logger is incorrect, there may be more serious issues to consider including data validity and proper operation of the data logger. If the clock is incorrect contact the Data Manager.

10.6.8 Message to Central Procedure

ESC 8816 or 8832

1. Log in to the data logger.

2. From the top level menu Type **SMC** (**S Status Menu** > **M Message Menu** > **C Leave a Message for Central**) followed by hitting the **Enter** or **Return** key.

3. When the text entry display appears, type in up to 80 characters of text explaining the site visit, followed by your initials, example, "Weekly completed. No problems noted. – JJ" then hit the **Enter** or **Return** key on the keyboard to accept the log entry.

Agilaire 8872

1. Log in to the data logger using the AirVision application.

2. Select the **Home** tab > then **Data Editors** drop down menu.

3. From the drop-down menu select, **Log Book Entry Editor**, and click the round green icon with white "plus" symbol, entitled, **New Log Entry**.

4. Next, click on the **Category**: drop-drop down menu and choose **Logger Message**.

5. Select the drop-down menu item, **Site** and choose the appropriate site, for example, **Welby**.

6. Enter text explaining the purpose of the site visit, followed by your initials. Example, "Weekly completed. No problems noted. – JJ" hit the **Save** button at the top left to save your comments. The application will allow more characters than 80, but they are truncated for the Central computer.

10.6.9 Line change Procedure

1. All sample lines are to be changed annually or as needed if defects are suspected. Sample lines should be trimmed (at the probe end) by approximately 1 ft. six months after installation. Through the probe calibration lines are to be changed once every three years or when defects or degradation are suspected.

2. Disable analyzer channels on data logger (10.6.1).

3. Perform a leak check on the existing sample line to confirm data validity prior to changing the line (10.6.6).

4. Remove the existing line and measure out and cut a length of new sample line of approximately the same length as the old line plus at least an additional foot. Be sure to have enough excess inside the shelter to allow for effective analyzer calibrations. Use a designated tubing cutter to cut the Teflon tubing to ensure the cut is straight, at a 90 degree angle to the tubing's outer wall, and not beveled.

5. Cover or cap the end of the new line prior to installation. This ensures dirt does not enter the line during the installation process. Remove the line cover or cap once the line is installed.

6. Record the final length of the sample line.

7. Ensure fittings used in the sample train are made of Teflon.

8. Clean water dropout manifold (if equipped).

9. Perform a leak check on the new sample line (10.6.6).

10. If the line replaced is a sample line, note sample line length and determine residence time. All Residence times must be < 20 sec. The calculation of residence time requires knowledge of the sample flow rate, length of sample line, additional static volumes such as water dropouts, and the internal cross-sectional area of the tubing. When determining an additional static volume, as with a water dropout, use only the volume that sees active gas flow. For example, the water catch flask on the bottom of the water dropout should not be included in volume calculations, only the upper portion of the manifold. Below is a table of internal cross-sectional areas for common types ¼ Teflon tubes that can be use in residence time calculations.

Table 4. Internal Cross-Sectional Area for Teflon Tubing

Tubing Diameter	ID	OD	ID Area
Thin Wall (3/16 x 1/4)	4.8 mm	6.35 mm	18.10 mm^2
Medium Wall (5/32 x 1/4)	4.0 mm	6.35 mm	12.57 mm^2
Thick Wall (1/8 x 1/4)	3.2 mm	6.35 mm	8.04 mm^2

(Note* 1 cm^3 = 1 mL)

Equation 7. Residence Time

$$Residence\ Time\ (sec) = \left(\frac{\left(\left(\frac{ID\ area\ of\ tube\ (mm^2) \times Tube\ Length\ (in) \times\ 2.54(\frac{cm}{in})}{100\ (\frac{mm^2}{cm^2})} \right) + Static\ Vol.\ (cm^3) \right)}{Sample\ Flow\ (\frac{cm^3}{min})} \right) \times 60\ (\frac{sec}{min})$$

11. Enable analyzer channels on data logger (10.6.1).

12. Note line change activities on log sheet.

13. Enter message to central, including the new residence times and/or sufficient information to determine residence time based upon the analyzers flow rate (10.6.8).

10.6.10 Perform Manual Precisions

<u>ESC 8816 or 8832</u>

1. Login to the data logger.

2. From the top level menu type **CCS** (**C Configuration Menu** > **C Configure Calibrations** > **S Start a Calibration Program**.)

3. A list of calibration options appears (see figures below.) To run a manual QC NO_2 Precision select, **QC-NO_2** by scrolling to that option and hitting the **Enter** or **Return** key.

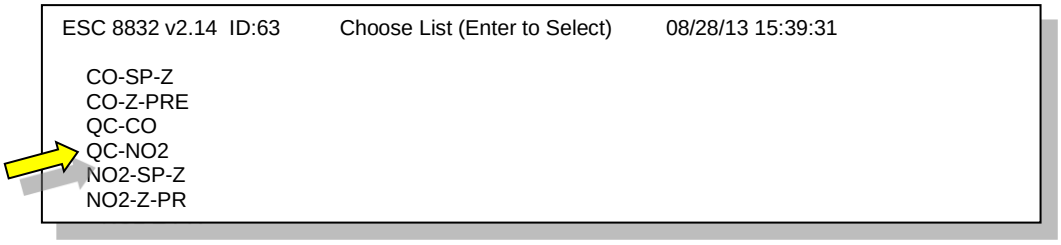

CCS Menu Option Results

4. Hit **Esc** (escape) key twice for the top level menu. Type, **DF** to verify the QC precision test was initiated. You should see the letter, "C" next to the NO_2 line indicating it is now calibrating. For NO_2 it may run 20 minutes or longer. After completion, allow time for the data logger to update. Once updated the new precision value will appear in the **RL** list.

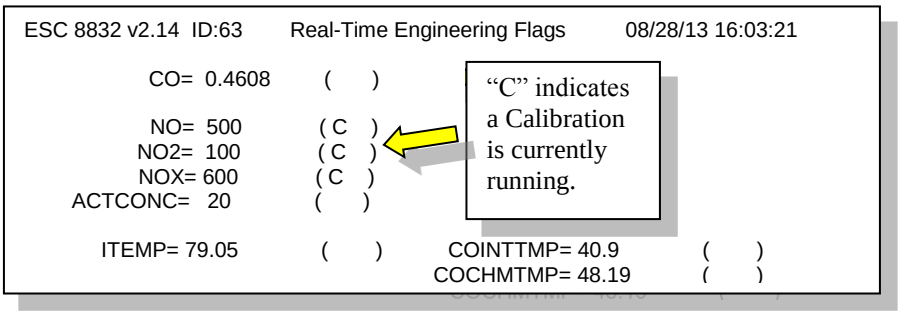

5. Hit the **Esc** key twice to get to the top level menu then type **RL** to view results as shown in the below figure.

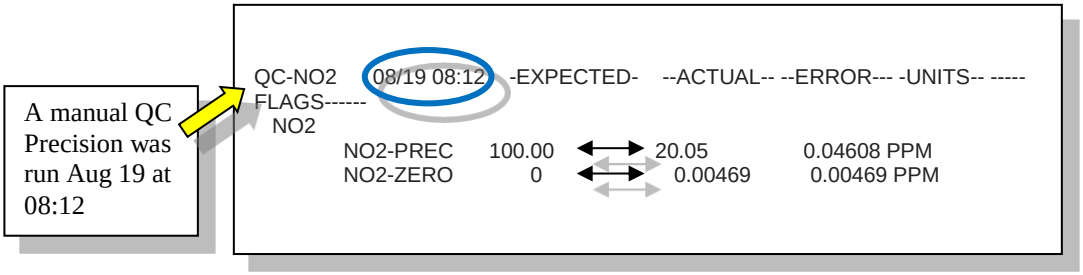

<u>Agilaire 8872</u>

1. Login to the 8872 data logger.

2. From the **Home** tab select **Utilities** > **Site Node Logger Toolbox**.

3. When the **Site Node Logger Toolbox** tab appears, select the **Calibration** tab and click on the proper calibration sequence. Each QC manual Precision choice will have QC" in the Sequence Name. If a sequence has "PRE" or "PR" in the name, it is a test performed at the precision level.

4. Select **Start** at the right side of the window, in the "QC-NO_2" row to run the QC-NO_2 manual Precision. Next, look in the "Phase Name" column to see the current phase (progress) of the calibration. For SO_2 and NO_2 it can take up to an hour or longer to get results. For CO and O3 it takes approximately 25 minutes.

5. Once the Precision has completed, on the **Home** tab click **Reports**. From the drop-down menu, select **Calibration Results**.

6. When the "Report Criteria" window appears, notice the "Parameter Selection" section. On the keyboard, hold the **Ctrl** button down and click on each parameter for which you wish to see calibration results. Options are, **ACTCONC**, **CO**, **NO**, **NO_2**, **NOX**, and **O3CAL**, and **SO_2.** Select all or a subset depending on the site, available equipment, and result needed.

7. Now look at the "Date Range" section of the window. Modify the "Start Date" and time and "End Date" and time to coincide with the Precisions just run.

8. Finally in the "Calibrations Results" section click on **Generate Report** to see the Precision results, presented in a report format.

    a. The "Value" column will show the average value collected by the analyzer. The "Expected Value" column contains the value that should have been generated by the calibration equipment. With O3, the O3 Cal "Expected Value" column shows the value the O3 calibration equipment was attempting to generate and the "Value" column shows what it actually did generate. With NO_2, the ACTCONC section "Expected Value" column shows the value the NO_2 calibration equipment was attempting to generate and the "Value" column shows what it actually did generate.

9. Now import the Manual QC Precision results into the ZSP Tracking Database. This procedure can be found in the Gaseous and Meteorological Data Validation SOP, Appendix D3.

10.7 Calibration Standards

Refer to the Standards Verification/Calibration SOP in the CDPHE/APCD/TSP QAPP for more detailed information on standards and traceability of gas standards.

11 HANDLING AND PRESERVATION

Atmospheric oxides of nitrogen concentrations are monitored continuously; no discrete samples are collected, handled, or preserved. Therefore a section for sample handling and preservation in this SOP is not required.

12 SAMPLE PRESERVATION AND ANALYSIS

Oxides of nitrogen gas stream samples receive no special preparation prior to analysis. Therefore a section for sample preservation and analysis in this SOP is not required.

13 TROUBLESHOOTING

13.1 Environmental Factors

Environmental conditions can play a role in the operational characteristics of analyzers. Some external factors may be constant while others are sporadic in nature. External factors to check include:

1. Is the shelter temperature stable throughout the day?

2. Is vibration from other equipment causing an affect?

3. Is the air conditioner or heater blowing directly on the instrument?

13.2 General Factors

Other factors linked to the shelter and manifold design can contribute to data loss. The sample probe, water dropouts, sample lines and external pump lines should be checked on a regular basis to ensure integrity. Dirty sample lines can artificially suppress readings of reactive analytes. Low sample flow rates causes increased residence times within the sample train and may lead to the premature degradation of reactive species. Sample pumps should be maintained to ensure proper flow rates. Sample line bulkhead fittings to the exterior of the shelter are to be sealed to prevent inside air from exiting the shelter near the sample inlet resulting in a biased measurement. Power to the site is another factor that can contribute to data loss. Incoming power needs to be stable and have a good waveform. All power strips are to be in good working order and power loads are to be balanced across all station outlets.

13.3 Instrument Troubleshooting

Troubleshooting of problems with analyzers is specific to each analyzer and its design. Common problems with instruments include:

1. Low or erratic flow
2. Erratic or noisy readings
3. No readings or off-scale readings
4. No display
5. No output
6. Analyzer completely inoperative

Troubleshooting sections in specific analyzer operation and service manuals, located at each site or in the APCD office, should be consulted to assist in resolving instrument problems.

Chapter 14 outlines troubleshooting techniques in both the 200E manual, and Chapter 14 in the T200 manual. Troubleshooting techniques for the data logger and supporting sample system parts or components, including external solenoid manifolds and calibration systems, are the purview of their respective manuals and the experience of qualified operators.

14 DATA ACQUISITION, CALCULATIONS, AND DATA REDUCTION

All data is collected, stored, and retrieved digitally from data loggers. The terms data logger and onsite data acquisition system are used interchangeably throughout this SOP.

14.1 Data Acquisition

The APCD/TSP data acquisition system (DAS) is comprised of three components: an onsite primary data acquisition system that collects data from all continuous monitoring equipment, an onsite secondary data acquisition system, or back-up system that collects data from the continuous monitoring equipment, and a centralized polling system that routinely collects data from the primary data acquisition system and stores it in a SQL database for processing and validation.

14.1.1 Primary Onsite Data Acquisition Systems

The APCD employs three different models of onsite DAS in the operations of its air monitoring network. These are the ESC 8816 data logger, the ESC 8832 data logger, and the Agilaire 8872 data logger. The 8816 data logger is the oldest type of data logger in the network and is a predecessor to the 8832 and 8872 data loggers. See Section 8.1.4 for a more detailed description of these data loggers.

14.1.2 Secondary Onsite Data Acquisition Systems

The APCD uses a backup data acquisition system to provide backup data in case of failure of the primary systems. The backup data acquisition system is the analyzer based on-board data acquisition systems that are unique to each manufacturer. In the event an on-board data acquisition system is not available, a digital strip chart recorder can be used. Internal data logging is available on the newer TAPI analyzers. A description of these secondary data acquisition system is as follows.

<u>TAPI iDAS System</u>

The TAPI internal data acquisition system (iDAS) is available on all analyzers. The non-volatile memory retains the data even when the instrument is powered off or the firmware is updated (back up before update advised). Access to the iDAS is available either through the front panel or the APICOM remote interface. The remote interface allows for data to be automatically downloaded to a remote PC. The iDAS is flexible in the parameters stored and triggering events to initiate data storage. The maximum iDAS data storage is limited to the analyzers available memory and the number of data parameters and channels (Teledyne-Monitor Labs, 2009).

14.1.3 Central Polling System

The APCD uses the AirVision software package for its central data management system. AirVision is a centralized data management and polling software system that is used to acquire, edit, validate, analyze, and report air quality data. AirVision supports open data acquisition and data imports thru modular drivers that can be added to provide connectivity to a data source. The system has combined data editing and quality control tools that can be utilized in evaluating and validating data in the post-processing environment. The post-processing environment allows user control of the data from the management of raw data within the server environment through the exporting of validated data through built in reports or for external statistical evaluations and reporting. A more detailed description of this application can be found in APCD's Data Logger and Central Polling Standard Operating Procedure. (Agilaire, 2009)

<u>Central Polling Daily Tasks</u>

1. Task managers within Air Vision polls data from remote air quality monitoring sites at the top of each hour, at a minimum. Some sites may be polled at a greater frequency depending upon data needs. Data from each site is stored in a SQL database and made available for review and analysis after polling has been completed.

2. Ambient data on the AirVision Central polling computer is reviewed every business day in the morning, the previous 24 hours (or 3 days on Mondays) worth of data is reviewed for completeness and accuracy. This data review is used to determine if a physical site visit is required.

3. Low level (precision) and high level (span) test gas sequences are run on alternate days. The precision and span level tests are followed by a zero test and a two-minute recovery period. The results are reviewed each morning and plotted on control charts. It is the responsibility of one individual within TSP to review the daily Zero/Span results, plot them on the control charts, and notify the technician responsible of any out of control condition. "Out of control" is defined as:

    a. trending toward warning limit as defined on the control chart

    b. points plotted exceeding the warning limit

    c. points plotted exceeding the action limit as defined on the control chart

14.2 Calculations and Data Reduction

As mentioned above, data collected on a DAS are available as soon as the averaging period is complete. Data are polled automatically via modems (analog phone, wireless cellular, or DSL) by the Central polling computer hourly. If needed, sub-hourly polls or remote checks can also be performed.

Data from the continuous air monitoring equipment are generally stored at hourly and minute resolution averages. The software on the Central polling computer stores the downloaded minute and hourly averages and is capable of aggregating these averaging intervals into larger averaging intervals such as 8-hour or 24-hour averages.

A more detailed description of the DAS is given in the CDPHE/APCD/TSP QAPP and in the manufacturers' manual.

14.2.1 Zero Adjustment Methods

$NO/NO_2/NO_x$ analyzers base line response, as measured by the nightly performance checks, can change over time at a significant magnitude relative to the analytical system's method detection limit. Base line shifts can occur for numerous reasons, these reasons can include changes in lamp intensity due to normal aging, accumulation of dirt and contaminates in the sampling systems, and detector drift. A drifting baseline does not necessarily necessitate the invalidation of data. If the drift is small and reproducible over the course of several days, then post processing of data to remove the baseline bias can be performed. A more detailed description of APCD's zero adjust methods can be attained in APCD's Data Validation SOP.

15 COMPUTER HARDWARE AND SOFTWARE

The data acquisition system (DAS) used by the APCD/TSP for collecting data from continuous air monitors is generally described in Section 14 and in the CDPHE/APCD/TSP QAPP.

The primary DAS Central polling computer is a Windows based server. The AirVision data system on this server provides for polling the sites using both dial-up and digital modems, along with broadband access for data. A printer is attached to the system for printing out reports. The primary repository for data, and the engine for information assembly, is the Microsoft SQL Server operated and maintained by the Governor's Office of Information Technology (OIT). The CDPHE/APCD/TSP maintains a database owner position responsible for logical maintenance of the data system.

The 8872 is a Windows based PC with attached monitor, keyboard, and mouse. The 8832 and 8816 are proprietary hard-circuit systems that may or may not have attached screens and keyboards. Sites usually include other computer hardware and software such as switches, RS232 cables, Ethernet cables, and analog cables.

16 DATA MANAGEMENT AND RECORDS MANAGEMENT

16.1 Data Management

Data are generated from the analyzer at intervals internally set, ranging from an averaging time of 20 seconds to 5 minutes. The data is collected by the on-site data logger as near-real-time data (often every 3 to 10 seconds) and is aggregated into 1-minute averages, which are in turn aggregated into 1-hour averages. Some data streams may be stored at a user defined third averaging interval. Note the capacity of the on-site data logger is limited to three time-base averaging intervals. The Central polling computer collects these averages routinely.

For reporting purposes, other averaging intervals are derived. In these cases, the data is aggregated by the Central polling computer for the purpose of the report and are often not stored independently. The Central polling computer connects to a SQL server, which is maintained, and backed up, by OIT.

Data are sent to the EPA centralized Air Quality System (AQS) database for long-term storage. Additionally, the data are stored and archived by the APCD/TSP in both electronic and hard copy formats. Monthly electronic data files and related printed material packets (maintenance forms, etc.) are produced.

A more detailed description of the data management is given in the Data Processing Central SOP in the CDPHE/APCD/TSP QAPP.

16.2 Records Management

Continuous ambient air monitoring data are archived both in electronic and hard-copy formats. Electronic data and calibration files from the primary data acquisition system are archived. Data from the backup electronic strip chart recorders, where used, are downloaded annually and archived on a computer hard drive. Hard copy printouts of the data are kept at the APCD office for a minimum of three calendar years before being sent to an off-site archive/storage facility.

17 QUALITY ASSURANCE AND QUALITY CONTROL

The APCD has in place robust Quality assurance (QA) and quality control (QC) programs to ensure all methods and procedures are done accurately and systematically to ensure data quality. QA and QC are two terms commonly discussed, but often confused. Quality assurance refers to the overall process of ensuring that the data collected meet previously stated Data Quality Indicators (DQI) and associated measurement quality objectives (MQOs). The principal DQIs are precision, bias, representativeness, completeness, comparability, and sensitivity. The principal MQO's are parameter specific and are listed in CDPHE's QAPP. Quality control covers specific procedures established for obtaining and maintaining data collection within those limits. Field staff are predominantly responsible for the implementation of QC procedures, however, data attained from these procedures is utilized in QA evaluations.

17.1 Quality Assurance

The goal of the quality assurance program is to control measurement uncertainty to an acceptable level through the use of various QC and evaluation techniques. The entire Quality Assurance effort put forward by the APCD is too large to include here. The scope of this SOP will describe efforts taken by site operators and data validation personnel to ensure the quality of the data collected meets standards set forth in various sections of the *Code of Federal Regulations*. For a complete description of the QA and QC process undertaken by the APCD, see the appropriate quality assurance appendices in the QAPP. Two of the most significant Quality Assurance procedures are described below.

17.1.1 Audits

Audits are evaluation processes used to measure the performance of effectiveness of a system and its elements. APCD quality assurance staff performs two types of audits. These audits are performed at a frequency as described in APCD QAPP.

Systems Audits - A systems audit is an on-site review and inspection of an ambient air monitoring program or air monitoring site to assess its compliance with established regulations governing the collection, analysis, validation, and reporting of ambient air quality data.

Performance Audits - A performance audit is a type of audit in which the quantitative data generated in a measurement system are obtained independently and compared with routinely obtained data to evaluate the proficiency of an analyst, laboratory, or measurement system. Two types of performance audits are discussed below.

- Monitoring Organization Performance Audits - These performance audits are used to provide an independent assessment of the measurement operations of each instrument being audited. This is accomplished by comparing performance samples or devices of "known" concentrations or values to the values measured by the instruments being audited.

- National Performance Evaluation Program (NPEP) – These performance audits are implemented at the federal level although some programs may be implemented by the monitoring organizations if certain requirements are met.

17.1.2 Data Quality Assessment

Data Quality Assessment is used to assess the type, quantity, and quality of data in order to verify that the planning objectives, Quality Assurance Project Plan components, and sample collection procedures were satisfied and that the data are suitable for its intended purpose. Data Quality Assessment is a five-step procedure for determining statistically whether or not a data set is suitable for its intended purpose. This assessment is a scientific and statistical evaluation of data to determine if it is of the type, quantity, and quality needed and is performed annually by quality assurance staff to check if objectives were met.

17.2 Quality Control

Quality Control is the overall system of technical activities that measures the attributes and performance of a process, item, or service against defined standards to verify that they meet the stated requirements established by the EPA. Quality control includes establishing specifications or acceptance criteria for each quality characteristic of the monitoring/analytical process, assessing procedures used in the monitoring/analytical process to determine conformance to these specifications, and taking any necessary corrective actions to bring them into conformance.

Quality control refers to procedures established for collecting data within pre-specified tolerance limits. These pre-specified tolerances are defined in the Measurement Quality Objectives as defined in APCD's QAPP. While all QC procedures are important, the most significant procedure employed by the APCD is the routine measurement of a known test gas by gaseous analyzers. All procedure documented in this SOP are QC procedures because they allow the analytical systems to continue running in exceptional condition and serves to minimize out-of-control conditions as defined by APCD MQO's. By definition, the creation and use of this SOP is a QC function. All QC procedures are described in Sections **Error! Reference source not found.** and 10 of this SOP. Three of the most significant QC procedures are described below.

17.2.1 Performance and Precision Tests

A primary quality assurance task carried out by site operators is the performance of routine QC checks. The APCD performs two types of QC checks at designate precision level test gas concentrations. These two tests are called Performance checks and QC Precision checks. The Performance check is an automated performance test that is performed nightly and is used to evaluate the health of the sample system. The QC Precision check is a manual evaluation performed by qualified personnel who can attest to their validity and are reported to the EPA. The former are not reported to the EPA to prevent an artificial bias introduced by sample pools of different size. Sites operated by subcontractors are not required to manually perform QC Precision checks. Instead, one performance check is selected at random from each two-week period to satisfy the QC Precision check requirement. The performance check is selected by APCD personnel and is included with the APCD-operated QC Precision check submission to the EPA's AQS.

For instructions on performing a manual QC precision test, see Section 10.6.10.

17.2.2 Calibrations

Calibration of an analyzer or instrument establishes the quantitative relationship between the actual value of a standard, be it a pollutant concentration, a temperature, or a mass value, and the analyzer's response (chart recorder reading, output volts, digital output, etc.). This relationship is used to convert subsequent analyzer response values to corresponding concentrations. Once an instrument's calibration relationship is established, it is checked at reasonable frequencies to verify that it remains in calibration. It is the goal of APCD to perform calibrations on all analyzers quarterly, however, circumstances my require calibrations be performed at the longer frequency of every 6-months. A 6-month calibration frequency still meets EPA recommended calibration frequency criteria.

For instructions on performing a calibration, see Section **Error! Reference source not found.**.

17.2.3 Documentation

Documentation is an important component of the QC system. Extensive certification paperwork and log sheet must be rigorously maintained for procedures, standards and analyzers. APCD takes special care to prepare and preserve electronic and paper backup copies of all site log sheets, ambient sample data, QC data, and calibration data. All data and supporting documentation should be held on-site for a minimum of three calendar years then sent for offsite archive. See Section 16 for additional information.

18 BIBLIOGRAPHY

Agilaire. (2013). *Agilaire Model 8872 Manual.* Knoxville, TN: Agilaire LLC.
Agilaire. (2009). *AirVision Version 1.* Knoxville, TN: Agilaire LLC.
Environmental Systems Corporation. (2001). *ESC Model 8816 Data Logger Engineering Manual.* Knoxville, TN: Environmental Systems Corporation.
Environmental Systems Corporation. (2006). *ESC Model 8832 Data Logger Engineering Manual.* Knoxville, TN: Environmental Systems Corporation.
Mesa Laboratories. (MK01-26 Rev H). *Definer 220 Series User Manual.* Butler, NJ: Mesa Laboratories.
Monarch Instruments. (MLK 071612 Rev1.62). *Data Chart 1250 Paperless Recorder Instruction Manual.* Amherst, NH: Monarch Instruments.
Teledyne-API. (2010). *Addendum - M200EU-NOy Converter.* San Diego, CA: Teledyne-API.
Teledyne-API. (2013). *Addendum - Model T200UP Photolytic Nitrogen Oxide Analyzer.* San Diego - CA: Teledyne-API.
Teledyne-API. (2010). *Addendum - Ultra Sensitivity Model 200EU NO/NO2/NOx Analyzer.* San Diego, CA: Teledyne-API.
Teledyne-API. (2013). *Addendum - Ultra Sensitivity Model T200U NO/NO2/NOx Analyzer.* San Diego, CA: Teledyne-API.
Teledyne-API. (2010). *Operation Manual - Model 200E Nitrogen Oxide Analyzer.* San Diego, CA: Teledyne-API.
Teledyne-API. (2013). *Operation Manual - Model T200 Nitrogen Oxide Analyzer.* San Diego, CA: Teledyne-API.
US EPA. (2007). *Guidance for Preparing Standard Operating Procedures.* Research Triangle Park, NC: US EPA OAQPS AQAD.
US EPA. (2013). *Quality Assurance Handbook for Air Pollution Measurement Systems, Volume 2.* RTP, N: US EPA.
US EPA. (2005). *Technical Assistance Document for Precursor Gas Measurements in the NCore Multi-pollutant Monitoring Network.* Research Triangle Park, NC: US EPA.

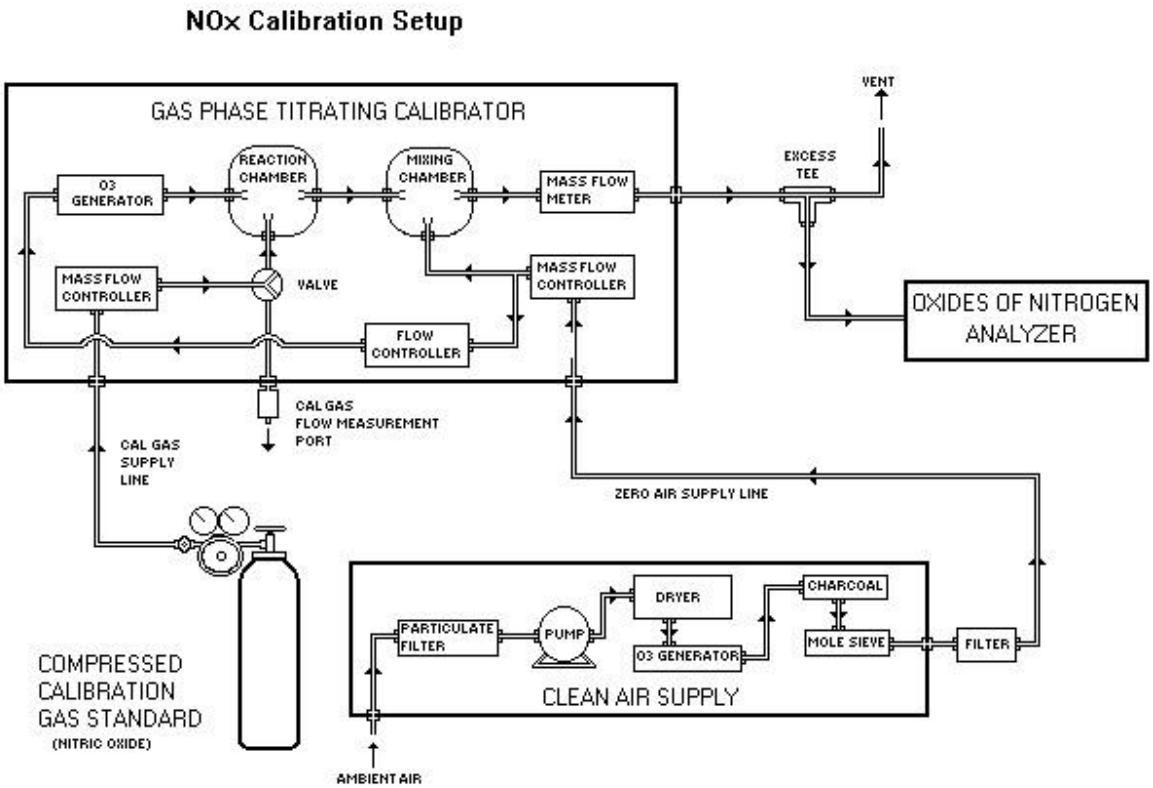

Figure 1. NO / NO_2 / NO_x Calibration Setup

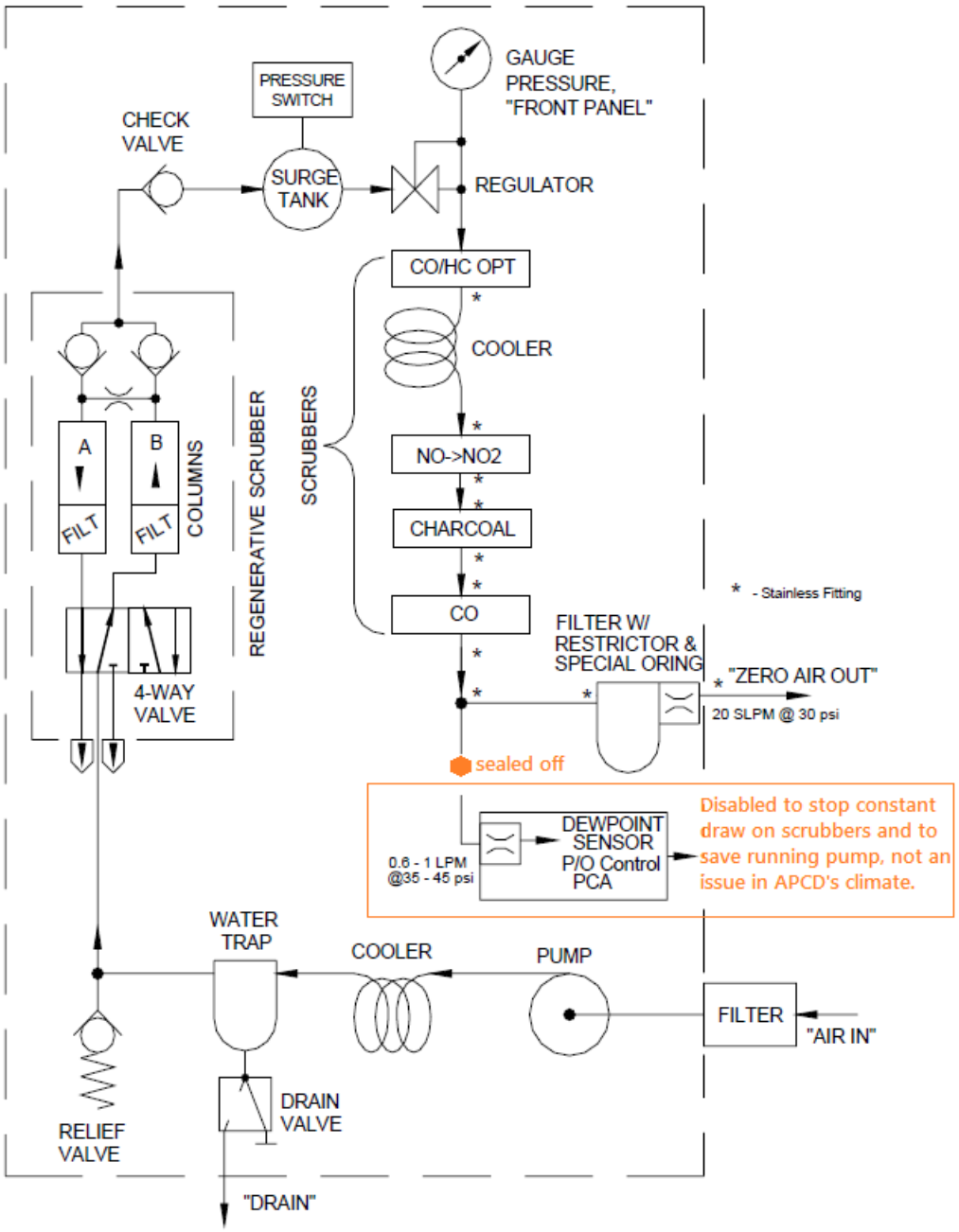

Figure 2. Typical zero-air supply system - TAP 701

Nitrogen Dioxide

____of____

Calibration \ Audit: AA ET SC

STATION_____ TIME OFF LINE_____/_____ DATE_____
ANALYZER: TECO 48 _____ S/N_____ Last Audit/Cal_____
Performed by_____ ZERO CTRL _____/_____
SAMPLE FLOW Leak Check_____ GAIN CTRL _____/_____
Prior Setting _____ Manifold Fan _____
Current Flow _____/_____ Press _____Temp_____
Rotometer #_____ DAS_____ Intens 1 _____ 2 _____

CALIBRATOR setting	Read	PPM OUT	DATA read	AQ. corr	SYS. %re	DVM	CHART read	corr	%re	DISP	COMMENTS
_____	_____	_____	_____	_____	_____	_____	_____	_____	____	_____	_____
_____	_____	_____	_____	_____	_____	_____	_____	_____	____	_____	_____
_____	_____	_____	_____	_____	_____	_____	_____	_____	____	_____	_____
_____	_____	_____	_____	_____	_____	_____	_____	_____	____	_____	_____
_____	_____	_____	_____	_____	_____	_____	_____	_____	____	_____	_____
_____	_____	_____	_____	_____	_____	_____	_____	_____	____	_____	_____
_____	_____	_____	_____	_____	_____	_____	_____	_____	____	_____	_____
_____	_____	_____	_____	_____	_____	_____	_____	_____	____	_____	_____
_____	_____	_____	_____	_____	_____	_____	_____	_____	____	_____	_____
_____	_____	_____	_____	_____	_____	_____	_____	_____	____	_____	_____
_____	_____	_____	_____	_____	_____	_____	_____	_____	____	_____	_____
_____	_____	_____	_____	_____	_____	_____	_____	_____	____	_____	_____
_____	_____	_____	_____	_____	_____	_____	_____	_____	____	_____	_____
_____	_____	_____	_____	_____	_____	_____	_____	_____	____	_____	_____

SLOPE = _____CORR. COEF. = _____ Linear regression

INTCP = _____ %REL.ERROR F.S. = _____% (50.0 or 100.0 ppm)

	X	Y	%RE
100.0	____	____	
75.0	____		___
50.0	____		____
35.0	____		____
25.0	____		____
15.0	____		____
9.0	____		____

COMMENTS _____
_____
_____
_____
_____

Figure 3. Calibration/Audit Worksheet

FLOW MEASUREMENT

STATION_____ DATE _____

CALIBRATOR _____ ZERO AIR_____VAC = _____" PSI = _____"

CATALYTIC OXIDIZER at_____mv/_____ F/C

GAS STANDARD CYL #_____ REGULATOR PRESS = _____/_____ CONC = _____

CAL SETTING	RAW FLOW MEASURED	AVG FLOW	TEMP °C	(BP-Pv) * 298.2 / 29.92 * (273.1 T)	FLOW CONC @STP	* Fg PPM (Fd + Fg)	OUT
		$\bar{X}$=	$\bar{X}$=	(__ - __) * 298.2 / 29.92 * (273.2 +) CF =			
		$\bar{X}$=	$\bar{X}$=	(__ - __) * 298.2 / 29.92 * (273.2 +) CF =			
		$\bar{X}$=	$\bar{X}$=	(__ - __) * 298.2 / 29.92 * (273.2 +) CF =			
		$\bar{X}$=	$\bar{X}$=	(__ - __) * 298.2 / 29.92 * (273.2 +) CF =			
		$\bar{X}$=	$\bar{X}$=	(__ - __) * 298.2 / 29.92 * (273.2 +) CF =			
		$\bar{X}$=	$\bar{X}$=	(__ - __) * 298.2 / 29.92 * (273.2 +) CF =			
		$\bar{X}$ =	$\bar{X}$ =	(__ - __) * 298.2 / 29.92 * (273.2 +) CF =			

CALIBRATOR FLOW Total Excess FLOW STANDARD = Make and SN # _____
Rotometer _____ _____ _____mb or HBM - 1 # _____

BP = Barometric Pressure "Hg
STP = 25º C & 29.92 "Hg
Fd = Flow rate of dilution air
Fg = Flow rate of gas standard
Pv = Vapor
T = Temperature
CF = Correction Factor (dimensionless) to compensate flow for temp/barometric pressure

COMMENTS

Error! Reference source not found. (continued)

COLORADO
Air Pollution Control Division
Department of Public Health & Environment

Oxides of Nitrogen (NO, NO2, NOx, NOy)
Calibration Form

Site Name:	

Site Info.		Date Time		Calibration Equipment Info	
AQS ID:		Date (mm/dd/yy)		Calibrator Type:	
Parameter:		Prev Cal. Date (mm/dd/yy)		Calibrator SN:	
Analyzer Type:		Calibrator's Initials:		Calibrator Cert Date:	
Analyzer SN:				Bottle SN:	
Cal Full Scale:				Cal Bottle NO Conc:	
				Cal Bottle NOx Conc:	
				Exp. Date:	

Pre-Cal System QC NO				Pre-Cal System QC NO2 (NOy-NO)				Pre-Cal System QC NOx or NOy		
Pre-Cal Analyzer Slope:				Pre-Calibration CE Set :				Pre-Cal Analyzer Slope:		
Pre-Cal Intercept:								Pre-Cal Intercept:		
Set Point	Source NO Conc	NO only DAS Conc.	DAS %Diff	Source NO2 Conc	NO GPT DAS Conc	NO2 GPT DAS Conc	DAS %Diff	Source NOx Conc	NOx GPT DAS Conc	DAS %Diff
Zero										
Span										
Precision										

Pre-Calibration Assessment												
NO				Linearity	NO2/NOy-NO			Linearity	NOx/NOy			Linearity
Set Point	Source	DAS	Diff/%	%at Point	Source Corr	DAS	Diff/%	%at Point	Source	DAS	Diff/%	%at Point
Zero												
Level 1					Titration Level 1							
Titration Level 1												
Titration Level 1												
Titration Level 1												
Level 2					Titration Level 2							
Titration Level 2												
Titration Level 2												
Titration Level 2												
Level 3					Titration Level 3							
Titration Level3												
Titration Level 3												
Level 4					Titration Level 4							
Titration Level 4												
Level 5					Titration Level 5							
Titration Level 5												
Level 6												
Level 7												

NO Pre - Regression Results		NO2 Post - Regression Results		NOx / NOy Pre - Regression Results	
Slope:		Slope:		Slope:	
Intercept:		Intercept:		Intercept:	
R2:		R2:		R2:	

Figure 4. Calibration Report – Page 1

Post-Calibration Assessment

NO				Linearity	NO2/NOy-NO			Linearity	NOx/NOy			Linearity
Set Point	Source	DAS	Diff/%	%at Point	Source Corr	DAS	Diff/%	%at Point	Source	DAS	Diff/%	%at Point
Zero												
Level 1					Titration Level 1							
Titration Level 1												
Titration Level 1												
Titration Level 1												
Level 2					Titration Level 2							
Titration Level 2												
Titration Level 2												
Titration Level 2												
Level 3					Titration Level 3							
Titration Level3												
Titration Level 3												
Level 4					Titration Level 4							
Titration Level 4												
Level 5					Titration Level 5							
Titration Level 5												
Level 6												
Level 7												

NO Pre - Regression Results		NO2 Post - Regression Results		NOx / NOy Pre - Regression Results	
Slope:		Slope:		Slope:	
Intercept:		Intercept:		Intercept:	
R2:		R2:		R2:	

Post-Cal System QC NO

Post-Cal Analyzer Slope:	
Post-Cal Intercept:	

Set Point	Source NO Conc	NO only DAS Conc.	DAS %Diff
Zero			
Span			
Precision			

Post-Cal System QC NO2 (NOy-NO)

Post-Calibration CE Set :	

Source NO2 Conc	NO GPT DAS Conc	NO2 GPT DAS Conc	DAS %Diff

Post-Cal System QC NOx or NOy

Post-Cal Analyzer Slope:	
Post-Cal Intercept:	

Source NOx Conc	NOx GPT DAS Conc	DAS %Diff

Comments:

Calibration Acceptance Criteria (<=)	
Maximum Slope Deviation (+/-%) :	5%
%Diff from Best Fit Line (+/-%) :	3%
Zero Criteria (ppb) < :	3

Figure 4. Calibration Report – Page 2 (Continued)

STATION/MET

STATION: _____ / _____

	Supplier	Bottle #	Expiration	Conc	Month	Year
CO Span						
CO Prec						
NO						
NO2						
SO2						
O3	TAPI	SN:				

	Date						
Max Temp	<90F						
Min Temp	>50F						
CO Span Press	>200psi						
CO Prec Press	>200psi						
NO Press	>200psi						
NO2 Press	>200psi						
SO2 Press	>200psi						
Wind Speed	<100mph						
Wind Direction	>0<360						
Temp Shield	free						
Translator							
Data Collection							
	Operator						

Day	Time	Action	Initials	Date Online

Figure 5. Station and Met Log

Colorado Department of Public Health and Environment
Air Pollution Control Division - Technical Services Program

NO API 200

sn: _____ / _____
1: A E T 2: A E T

STATION: _____
/
Month Year

Monthly Station Activities Log	Date						
Sample Flow	E,T: 350-450 EU,TU,UP: 800-1000						
Ozone Flow	45 - 75						
HVPS	400 - 900						
R Cell Temp	E: 49 - 51 TU,UP: 39 - 41						
Box Temp	25 - 35						
PMT Temp	E,T: 5 - 9 EU,TU,UP: 3 - 7						
Converter Temp	310 - 320 NOy: 320 - 330						
R Cell Pressure	E,T: <10 EU,TU,UP: 2 - 5						
Sample Pressure	ambient +/-2						
Slope (NO/NOx)	0.7 - 1.3	/	/	/	/	/	/
Offset (NO/NOx)	-50 - 150	/	/	/	/	/	/
Clock	+/- 2 min						
Filter	Changed?						
Leak Check	<10 S Press						
	Operator						

IDAS (Monthly), >30 Days Initials: _____

Day	Time	Action	Initials	Time Online

Use ✓ for yes and in-range and ✗ for no and out-of-range, Δ for changed

Figure 6. NO_2 Log

MAINTENANCE REPORT

DATE_____

STATION_____

ASSIGNED TO_____

ORIGINATED BY_____

ANALYZER or EQUIPMENT_____ S/N_____

MALFUNCTION DESCRIPTION OR COMPLAINT

ACTION TAKEN

DATA TO BE DELETED (IF ANY)
ENTER EXACT DATES AND DATA HOURS

COMPLETED BY_____

COMPLETION DATE_____

J:\zsfiles\forms\forms.xls:MaintRpt

Figure 7. Maintenance Report Form

TELEDYNE
INSTRUMENTS
Advanced Pollution Instrumentation
A Teledyne Technologies Company

9480 Carroll Park Drive, San Diego, CA 92121-2251
Phone (858) 657-9800 Fax: (858) 657-9818 Toll Free 1800 324-5190
E-mail: api-customerservice@teledyne.com www.teledyne-api.com

04-001C 17-MAY-2010

HOW TO CALCULATE MOLY CONVERTER EFFICIENCIES

I. PURPOSE: To provide instructions on how to calculate the efficiency of a Moly converter when using a GPT method of testing converters, by using the US EPA method, where the actual concentration of ozone is not a factor in the accuracy of the calculation of the converter efficiency. This procedure is based on the Code of Federal Regulations, Title 40, Chapter I, subchapter C, Part 50, Appendix F.

II. TOOLS:

a. API M700, M700E, or M700EU calibrator with O3 Gen option (or equivalent)

III. PARTS:

NONE

IV. PROCEDURE:

1. For the sake of numbers to input into this note, we have chosen 450 PPB NO gas as our reference point, you don't have to pick these values, they are just an example. There is also an assumption that the analyzer has a good calibration done @ 450 PPB NO span gas. If this is not the case, then once you are done with the leak check on the analyzer, input your 450 PPB NO span gas & calibrate the analyzer.

NOTE: For the GPT to be performed correctly there must be a minimum of 10% MORE NO than O3 produced. For example, if the Ozone produced is 400 PPB then the NO used must be 440 or more. Typically 450 PPB NO is made & 400 PPB of Ozone is produced.

2. Leak check machine to ensure that there are no leaks in the analyzer.

3. If you have input a CE factor into the instrument firmware (this would be in the CAL-CONC-CONV-SET menu) other than 100%, change this back to 100% for the duration of this test.

4. The first gas check is to test to see how much the converter is eating NO gas or out gassing NO gas. Bypass the converter in the machine, by placing a short piece of tubing in place of the converter. Perform a straight dilution with NO gas & air as a diluent gas. Input this 450 PPB NO gas into the analyzer, allow the machine to stabilize, & write down the NOx value on your data sheet on line 3.

5. Remove the converter bypass & install the converter back into the NOx sample stream, such that the NO sample goes through the converter again & allow the machine to stabilize. Write down your NOx value on your data sheet on line 4.

6. Subtract line 3 from line 4 & write that number down on line 5. The spec on the data sheet is the value that we use here in house, and your spec might be a bit higher. We have found that on NEW Moly converters this spec is a good one that predicts a good performing Moly converter, but in an older converter might eat a bit more NO, & this would be acceptable. If it is a constant value, or changes little over time, this is not a problem the machine will calibrate this out.

7. The next step depends on what type of calibrator you have. For the M700 generate 450 PPB of NO, and 0 PPB of O3. For the M700E or M700EU generate GPTZ with 450 PPB of NO and 400 PPB of O3. After allowing time to stabilize, record the NOX value on line 6, and the NO value on line 9. This is to allow for the extra flow from the ozone generator to be taken into account for when determining the change in the total concentration of gas takes place.

8. The next step is to perform your GPTPS. Generate 450 PPB of NO gas & input 400 PPB of O3. Allow instrument to run for 30 minutes or until the green sample light on the front display stops flashing. No values are taken during this step as it is an internal conditioning step for the O3 generator necessary for setting the proper drive voltage for the remainder of the test.

9. The next step is to perform your GPT. Generate the same 450 PPB NO gas & input 400 PPB of O3 (or generate 450 PPB NO & 400 PPB NO2, if that's what your calibrator says). Allow the machine to stabilize for 30 minutes & then write down the NOx value on line 7 & the NO value on line 10.

10. Subtract line 7 from line 6 & put that onto line 8

11. Subtract line 10 from line 9 & put that onto line 11

12. Put the number from line 8 into the letter A on line 12 & put the number from line 11 into the letter B on line 12.

13. Divide A by B & multiply it by 100 & put it into letter C on line 12.

14. Put the number in letter C onto the C on line 13 & subtract that value from 100 & put it into letter D on line 13. This is the converter efficiency.

15. This value should be >96%. For CEMS applications, a CE of <96% might be acceptable, depending on application & the guideline set up by the regulatory agency. In any application, check with your regulatory agency to see what the minimum CE factor is before replacing the converter.

MOLY TEST DATA SHEET

Line #	TEST		RESULT
1.	LEAK-CHECK (WHEN HOT)		YES / NO
2.	NO_X RESPONSE (MOLY BYPASSED)		_____
3.	NO_X RESPONSE (MOLY IN-LINE)		_____
4.	**OUT-GASSING / EATING** (NO – NO_X)		_____ (>-5 PPB, <5PPB)
5.	($NO_{X\ ORIG}$)	(NO_X mode, O_3 off)	_____ PPB
6.	($NO_{X\ REM}$)	(NO_X mode, O_3 on)	_____ PPB
7.	**NO_X LOSS** (9A - 10B)		_____ (A) (<4% of NOx ORIG; ex: for 450PPB 4% is 18 PPB)
8.	(NO_{ORIG})	(NO mode, O_3 off)	_____ PPB
9.	(NO_{REM})	(NO mode, O_3 on)	_____ PPB
10.	**NO_2** (9B - 10A)		_____ (***B***) (>300PPB)

11. Efficiency LOSS [(***A*** / ***B***) x 100] = [(____***A***___ / ___***B***____) x 100] = ____***C***____%

12. Total Conv Eff [100% – ***C***] = 100% - ____***C***_____ = _____***D***_____% (> 96%)

Figure 8. Calculation of Moly Converter Efficiency