TOWN OF MONUMENT

SANITARY SEWER COLLECTION SYSTEM SPECIFICATIONS

Approved: _____
Date: _____

SANITARY SEWER COLLECTION SYSTEM SPECIFICATIONS

TABLE OF CONTENTS

		Page
SUBSECTION 1 - GENERAL INFORMATION		
1-1	Authority	2
1-2	Effective Date of Specifications	2
1-3	Revisions, Amendments or Additions	2
1-4	Conformance	2
1-5.	Definitions	3
1-6	Abbreviations	4
SUBSECTION 2 - APPLICATION PROCEDURE/ENGINEERING STANDARDS		
2-1	Granting of Service	6
2-2	Application Procedures	6
2-3	Engineering	6
	A. Plans	6
	B. Inspections	6
2-4	Construction Documents	7
	A. Title	8
	B. Overall Utility Plan	8
	C. Plan and Profile Sheets	8
	D. Detail Sheet(s)	9
2-5	Easements	10
2-6	Plan Approval	11

SUBSECTION 3 – CONSTRUCTION INSPECTION AND ACCEPTANCE PROCEDURES

			Page
3-1	General		13
	A.	Scope	13
	B.	Engineered and Approved Plans	13
3-2	Construction Procedure		13
3-3	Inspection Procedure		14
3-4	Surveying		15
3-5	Maintenance of Traffic		15
3-6	Road Closings		16
	A.	General	16
	B.	Detours	16
	C	Permits	17
3-7	Service Interruption		17
3-8	Connections to Existing Mains		17
3-9	Existing Utilities and Structures		18
3-10	Disconnection of Service		18
3-11	Safety		18
3-12	Acceptance of Facilities		19
	A.	Initial Acceptance Inspection	19
	B.	Record Drawings and Easements	19
	C.	Final Acceptance	19

SUBSECTION 4 - DESIGN SPECIFICATIONS

4-1	General		21
	A.	Scope	21
	B.	Engineered and Approved Plans	21
4-2	Sanitary Sewer Main Design Criteria		21
	A.	Flow Design Criteria	21
	B.	Hydraulic Design	22
	C.	Location and Alignment	23
	D.	Depth	28
	E.	Manholes	28
	F.	Underdrain Systems	31
	G.	Sewer Main Cleanouts	32
	H.	Lift Stations	32

			Page
I.	Special Applications		33
	J	Limits of Accuracy	33
	K.	Stubouts	34
	L.	Materials	34
4-3	Sanitary Sewer Service Design Criteria		34
	A.	Flow Design Criteria	34
	B.	Hydraulic Design	34
	C.	Location and Alignment	35
	D.	Depth	35
	E.	Manholes	36
	F.	Materials	36
	G.	Underdrain Systems	36
	H.	Sewer Service Cleanouts	36

SUBSECTION 5 - MATERIALS AND INSTALLATION

5-1	General		39
	A.	Scope	39
	B.	Engineered and Approved Plans	39
5-2	Definitions		39
5-3	Reference Standards		40
5-4	Sanitary Sewer Main Materials and Appurtenances		41
	A.	Polyvinyl Chloride Pipe – PVC SDR 35	41
	B.	Polyvinyl Chloride Fittings	41
	C.	Ductile Iron Pipe	42
	D.	Concrete	43
	E.	Grout	45
	F.	Manhole Rings and Covers	46
	G.	Bedding Materials	46
	H.	Manhole Steps	48
	I.	Flexible Plastic/Rubber Joint Sealing Compounds	49
	J.	O-Ring Joint for Precast Concrete	49
	K.	Coal Tar Epoxy Lining	49
5-5	Sanitary Sewer Service Materials		50
	A.	Polyvinyl Chloride Pipe – PVC	50
	B.	Ductile Iron Pipe	50
	C.	Bedding Materials	50
	D.	Sanitary Sewer Service Fittings	50
	E.	Tapping Saddles	51
	F.	Pipe Adapters/Couplings	51
	G.	Lamphole/Cleanout Ring and Cover	51

			Page
5-6	Sanitary Sewer Main Installation		51
	A.	Excavation and Trenching	51
	B.	Pipe Foundations and Bedding	67
	C.	Trench Backfilling and Compaction	68
	D.	Installation of Sanitary Sewer Main	72
	E.	Installation of Manholes	74
	F.	Alignment and Grade Testing	77
	G.	Exfiltration and Infiltration Testing	78
	H.	Manhole Vacuum Testing	80
	I.	Cleaning	81
5-7	Sanitary Sewer Service Installation		82
	A.	Excavation	82
	B.	Pipe Foundation and Bedding	82
	C.	Trench Backfilling and Compaction	82
	D.	Installation of Sanitary Sewer Service Line	82
	E.	Installation of Service Line Taps	83
5-8	Grease Traps and Grease Interceptors		84
	A.	General	84
	B.	Definitions	85
	C.	Design and Sizing	85
	D.	Installation	89
	E.	Maintenance	90
	F.	Regulation	92
	G.	Application	93
5-9	Sand/Oil Interceptors		94
	A.	Regulation	94
	B.	Definitions	95
	C.	Design and Sizing	95
	D.	Installation	97
	E.	Maintenance	98
Appendix			100
Peaking Factor Chart			101
Grease-Sand/Oil Interceptor Maintenance Chart			102
Standard Detail Drawings			103

SUBSECTION 1

GENERAL INFORMATION

TABLE OF CONTENTS

		Page
1-1	Authority	2
1-2	Effective Date of Specifications	2
1-3	Revisions, Amendments or Additions	2
1-4	Conformance	2
1-5	Definitions	3
1-6	Abbreviations	4

SUBSECTION 1

GENERAL INFORMATION

1-1 Authority

These specifications are promulgated by the Town of Monument Director of Development Services in accordance with the authority granted by the Town's Board of Trustees and by consent of the Triview Metropolitan District Board of Directors.

The administration of these specifications, including interpretation, enforcement, revision, and waiver, is hereby delegated to the Director of Development Services. These standards are comprised of written standards of engineering practice, materials specifications, construction procedures and standard detail drawings. Interpretation of any discrepancies between sections of the specifications shall be made by the Director of Development Services.

1-2 Effective Date of Specifications

These specifications shall be effective from the date they have been approved by the Board of Trustees. The date shall be noted on the title sheet of the specifications. It shall be the responsibility of the holders of the specifications to determine that the set in their possession is the current edition.

1-3 Revisions, Amendments or Additions

These standards may be administratively revised, amended or added to from time to time, and such revisions, additions or amendments shall be binding and in full force and effect as of the date of their adoption.

Where these specifications do not address a specific design or construction matter, the Colorado Springs Utilities Wastewater Line Extension and Service Standards (latest edition) shall be utilized as the basis for review, inspection, and approval.

1-4 Conformance

No action, direct or indirect, of or by any person in making any connection, disconnection, repair, or otherwise doing work with respect to any sewer facility served by the Town or the Triview Metropolitan District in violation of these standards shall continue after discovery of such violation.

1-5 Definitions

A. Board

The Board of Trustees for Town of Monument.

B. Director of Development Services

The Director of Development Services is designated by the Town and the Triview Metropolitan District to exercise all authority on behalf of the Board of Trustees and the Triview Board of Directors in accordance with these Standards. The Director of Development Services shall have the authority to assign the Town Engineering Inspector to check any and all work in areas subject to this document. This includes all materials, equipment, excavation, bedding, backfill, and structures. The Director of Development Services shall have the sole authority to issue, in writing, any waiver from the provisions contained in these Standards or changes to any previously approved drawings.

C. District

The Triview Metropolitan District.

D. District Representative

Authorized field operations supervisor for the Triview Metropolitan District.

E. Fire District

The applicable Fire District for the area where construction is to take place. For areas north of Baptist Road, the applicable Fire District is the Tri-Lakes/Monument Fire Protection District. For areas south of Baptist Road, the applicable Fire District is the Donald Wescott Fire Protection District.

F. Owner/Developer

Any person, firm, corporation, association or agency who is authorized, or who desires, to obtain services from the Town or District. For the purposes of these specifications, the term Owner/Developer also includes any person, firm, corporation, association or agency constructing facilities which are to be connected to the Town's or District's facilities.

G. Town Engineering Inspector

The authorized representative(s) of the Town, who shall conduct plan review, site inspection, and other duties as assigned by the Director of Development Services.

H. Triview Manager

The Manager of the Triview Metropolitan District.

I. Utilities

Water distribution or transmission mains, sanitary sewer collection or trunk mains, storm sewer mains, and all overhead and underground lines.

J. Shall

Shall is mandatory.

K. May

May is permissive.

1-6 Abbreviations

All mention or reference to documents or specifications shall be the latest edition or revision thereof. The following abbreviations are commonly used in these specifications:

ACI	American Concrete Institute
AISC	American Institute of Steel Construction
AREA	American Railway Engineers Association
ASA	American Standards Association
ASTM	American Society for Testing and Materials
AWPA	American Wood Preserver's Association
ATSSA	American Traffic Safety Services Association
AWWA	American Water Works Association
ANSI	American National Standards Institute, Inc.
AASHTO	American Association of State Highway and Transportation Officials
UL	Underwriters Laboratory
UNI	Unibell Association
OSHA	Occupational Safety and Health Administration

SUBSECTION 2

APPLICATION PROCEDURES/ENGINEERING STANDARDS

TABLE OF CONTENTS

		Page
2-1	Granting of Service	6
2-2	Application Procedures	6
2-3	Engineering	6
	A. Plans	6
	B. Inspections	6
2-4	Construction Documents	7
	A. Title	8
	B. Overall Utility Plan	8
	C. Plan and Profile Sheets	8
	D. Detail Sheet(s)	9
2-5	Easements	10
2-6	Plan Approval	11

2-1 Granting of Service

Sanitary sewer service shall be provided in accordance with the Rules and Regulations of the Town or District, as applicable. The request for service shall be submitted to and approved by the Director of Development Services or the Triview Manager, as applicable.

2-2 Application Procedures

The Town shall establish, and may amend from time to time, procedures to be followed by the Owner/Developer requesting approval for the extension of, or connection to, Town's or District's facilities. These procedures shall include all requirements for paperwork submittal, engineering design, construction, and acceptance. Prior to final approval of the construction documents the following shall be prepared and submitted to the Town.

- Site Plan Improvement Agreement (SPIA)
- A "will serve" letter from the applicable District.
- Effluent Discharge Toxic Pollutant Checklist

2-3 Engineering

A. Plans

All plans and specifications submitted to the Town for review, comment, and approval of a system extension or modification shall be prepared by, or under the direct supervision of, a Professional Engineer registered by the State of Colorado. The Professional Engineer (the "Engineer-of-Record") shall be responsible for preparing and interpreting the plans and determining the materials specifications. All submitted plans shall bear the Professional Engineer's seal and shall be submitted for review to the Director of Development Services pursuant to Town administrative procedures.

The Owner/Developer or his representative shall be responsible for the adequacy of the installation of all items therein, and the Engineer-of-Record shall be responsible for assuring the sanitary sewer system has been installed in substantial conformance with the approved plans. Any failure or unsatisfactory performance of the system shall not be a cause for action against the Town or District.

B. Inspections

The Town shall have a right to inspect at all times all facilities connected to, or to become connected to, the Town's or District's facilities. Authorized employees and representatives of the Town shall be allowed free access at all reasonable hours to any building or premises receiving water or sanitary sewer service to insure compliance with these specifications.

Any inspection performed by the Town is solely for the purposes of the Town or District, and the Town assumes no liability or responsibility as a result of having performed any such inspection, for having failed to perform any such inspection, or for having collected a fee thereof. Any such inspection shall not be deemed to be an approval of the size, slope, alignment, materials used in construction, the method used in excavating, the placing of pipe, jointing, testing, backfilling or any other aspect of the facility inspected.

The construction of any facility connected to, or to become connected to, the Town's or District's facilities shall conform to the criteria set forth in the most current edition of these standards and the applicable plumbing codes enacted and enforced by the Pikes Peak Regional Building Department. Representatives of the Town shall have ready access at all reasonable times to all parts of the premises for the purpose of inspection and/or sampling. (This is a part of the Industrial Pretreatment Program required by the Environmental Protection Agency.)

Projects under the Pretreatment Program Regulations of the Donala Water and Sanitation District, and any connection to its wastewater system, should comply with those regulations. For work not within the Town boundaries, these regulations do not apply.

2-4 Construction Documents

All plans and specifications submitted shall be in strict compliance with the Standards contained herein and shall meet any special conditions that may be reasonably required by the Director of Development Services. <u>No work shall commence on any facilities until the plans and specifications are approved in writing by the Town of Monument.</u>

Construction Documents (CD's) shall be submitted to the Town for review. Sanitary Sewer plans are ordinarily included in the full set of CD's for a project. The CD's shall contain, at a minimum, the following:

- Title Sheet
- Overall Utility Plan
- Plan and Profile Sheets
- Detail Sheet(s)

The standard size shall be 24" X 36".

The following minimum standards shall apply to each sheet as follows:

A. Title

1. Name of project

2. Name of Developer (or Owner) and address

3. Name of Engineering Firm preparing the plans

4. Filing number and subdivision name

5. Signature line for Director of Development Services

6. Professional Engineer's Seal and signature

Note: For projects within the service area of either the Monument Sanitation District (MSD) or Woodmoor Water and Sanitation District (WWSD), a signature line for approval by either applicable agency is required on each sheet of sanitary sewer drawings.

B. Overall Utility Plan (Scale 1"=20' to 1"=100') shall contain:

1. Location, horizontal alignment and dimensions of existing and proposed streets, easements, and rights-of-way.

2. Street names, if applicable.

3. Lots to be served (with lot and block numbers).

4. All existing or proposed water, sanitary sewer, and storm sewer lines. Gas, electric and telephone lines need not be shown unless there are potential conflicts with these utilities. Utilities shown shall include all water mains, sewer mains, water service lines, sewer service lines, valves, fire hydrants, fittings, manholes, vaults and catch basins.

5. Stationing of utilities shall only be shown on the plan and profile sheets.

C. Plan and Profile Sheets (Scale: Horizontal 1"=20' to 1"=50'; vertical 1"=4' to 1"=8') shall contain:

1. Centerline profile of streets and easements. Horizontal alignment of streets and easements.

2. Lot and block numbers of lots to be served, with property lines shown.

3. Existing and proposed water, sanitary sewer, and storm sewer facilities. Sanitary sewer, storm sewer, and water mains shall be shown in plan view whether in road right-of-way, open space, or commercial lots. All storm sewer and water crossings shall be shown on sanitary sewer profiles. Drawings shall show all crossings of sanitary sewers, or other major utilities that, in the sole judgment of the Director of Development Services, may potentially interfere with the construction of the proposed water main.

4. Existing and proposed curb, gutter, sidewalk, and parking lots.

5. Dimensions from property line, flowline or centerline for all proposed water, sanitary sewer, and storm sewer facilities. Dimensions between utilities shall be required.

6. Pipe diameters, lengths, depths, slopes, and inverts for water mains at all crossings, side lot installations, or in open space areas.

7. All valves, fire hydrants, manholes, service lines, blowoffs, segments of restrained pipe, etc. All facilities shall be stationed, dimensioned and drawn accurately. Service lines may follow a standard layout if shown on the detail sheets, and shall then be installed at a consistent location throughout the entire planning area.

8. North arrow, scale, benchmarks, profile elevations, pipeline stationing.

D. Detail Sheet(s) shall contain:

1. Standard detail drawings which apply to the project in accordance with these specifications.

2. Any special details specific to the project.

3. Water and sanitary sewer service line standard layout, if applicable.

Note: Standard Detail Drawings which are included in these specifications may be omitted from the construction drawings with the approval of the Director of Development Services. The exclusion of these Standard Detail Drawings shall be at the sole discretion of the Town and shall not relieve the Owner/Developer of any responsibility to construct all facilities in strict accordance with these specifications.
Whenever a conflict occurs in the standard specifications or between the standard specifications and construction drawings, all final interpretations shall be made by the Director of Development Services pursuant to Section 1-1 of these specifications.

Each and every deviation from the specifications shall be considered a waiver and each request shall be in writing and submitted to the Town prior to the approval of the construction drawings.

Addenda and modifications to the drawings and specifications take precedence over the original documents. In the drawings, calculated dimensions shall take precedence over scaled dimensions and noted material over graphic indication.

2-5 Easements

All water and sanitary sewer facilities which are to be owned and operated by the Town or District, as applicable, shall be located within a dedicated right-of-way or easement.

Easements shall be identified on the Plat for the specific use. In the event an easement is not identified on the plat, a Grant of Easement form may be obtained from the Department of Development Services, and completed by the owner of the property. If easements are granted by separate instrument, they shall be executed and recorded prior to the issuance of a Land Development Permit.

A fence may be allowed in an easement, provided the Town has approved a fence permit.

Trees shall not be placed in sewer easements without written permission of the Director of Development Services. In the event that trees are placed in a sewer easement without written permission, they shall be removed at the expense of the Owner/Developer.

The minimum width of a sewer easement shall be 30 feet. This easement is intended for a single utility line. An easement width of 50 feet shall be required if two or more utilities are to be located within the same easement.

The criteria for determining additional width shall be dependent on the type and depth of utilities.

When selecting the location of utility lines within an easement, consideration shall be given to the excavation requirements for maintenance purposes of each line. Generally, a sanitary sewer line shall be centered within the easement if it is the only utility line located in the easement. The minimum separation requirements for water, sanitary sewer, and storm sewer mains shall apply within the easement.

2-6 Plan Approval

Final approval of the construction documents may only be given by the Director of Development Services.

Submittal of plans for Town approval shall be pursuant to the Town's adopted administrative procedures.

Once approval has been obtained for the Construction Documents, any revisions or modifications which affect the sanitary sewer system shall be brought to the attention of the Town Engineering Inspector, who will determine if the revision requires a modification to the approved plans and review and approval by the Director of Development Services, or if the revision is a minor change that can be noted on the as-built drawings. If revised plans are required, no work will be permitted on the affected area until a set of Town approved and stamped plans are on site.

SUBSECTION 3

CONSTRUCTION INSPECTION AND ACCEPTANCE PROCEDURES

TABLE OF CONTENTS

		Page
3-1	General	13
	A. Scope	13
	B. Engineered and Approved Plans	13
3-2	Construction Procedure	13
3-3	Inspection Procedure	14
3-4	Surveying	15
3-5	Maintenance of Traffic	15
3-6	Road Closings	16
	A. General	16
	B. Detours	16
	C. Permits	17
3-7	Service Interruption	17
3-8	Connections to Existing Mains	17
3-9	Existing Utilities and Structures	18
3-10	Disconnection of Service	18
3-11	Safety	18
3-12	Acceptance of Facilities	19
	A. Initial Acceptance Inspection	19
	B. Record Drawings and Easements	19
	C. Final Acceptance	19

3-1 General

A. Scope

All sanitary system construction within the Town or District, or future connections within the Town or District, shall be performed in accordance with these specifications. Any deviation from these specifications shall be approved in writing by the Director of Development Services.

B. Engineered and Approved Plans

All sanitary sewer system construction shall comply with engineered construction plans prepared by and/or under the direction of a Professional Engineer registered in the State of Colorado and which have been approved by the Town. Construction shall not begin without approved construction plans and specifications.

3-2 Construction Procedure

Following final approval of the plans and specifications, the Owner/Developer may proceed with construction. In addition to all construction requirements contained in other portions of these specifications, the Owner/Developer shall observe the following:

Construction shall commence within 180 days of the approval date shown on the plans, or the plans shall be resubmitted for review and approval. If any of the information on the construction plans changes in any manner for the installation of the mains, service lines or lot configuration, the Town Engineering Inspector shall be notified and will determine if the revision requires a modification to the approved plans and review and approval by the Director of Development Services. Work shall not proceed until the revision has been approved by the Director of Development Services. All revisions shall be included on the record drawings (as-builts).

Prior to the commencement of work, a preconstruction conference shall be held between personnel representing the Town (and District if applicable), the licensed utilities contractor (Contractor) who is scheduled to perform the work, and the Owner/Developer's consulting engineer (Engineer-of-Record).

The Town Engineering Inspector shall be notified a minimum of 48 hours prior to the commencement of work in order to schedule inspection activities.

Development phasing of any project shall be shown on the initial drawing submittal and made a part of the application procedure. All construction shall be accurately surveyed and staked in accordance with the approved plans.

Adequate provisions for notification of a service interruption must be given by the Owner/Developer prior to the actual isolation of the system by the Town or District. Service interruptions shall be kept to a minimum.

The Town Public Works Department or District Representative, as applicable, shall be notified whenever it becomes necessary to open or close a valve on the existing water system. Only Town or District personnel are authorized to operate valves in the service area. The Owner/Developer may operate valves under the supervision of Town or District personnel at the Town Engineering Inspector's discretion.

3-3 Inspection Procedure

All construction of utilities shall be inspected by personnel authorized by the Town. Inspection is intended to be periodic review on behalf of the Town and is not intended to be a replacement for the Owner.

Inspection by the Town shall not relieve the Owner/Developer from any obligation to perform the work strictly in accordance with the plans and specifications or any modifications thereof. Any work which is determined by the Town Engineering Inspector to be in conflict with these specifications shall be removed and corrected by the Owner/Developer at his sole expense.

Approval by the Director of Development Services shall in no manner relieve the Owner/Developer or his Engineer-of-Record from responsibility for errors or omissions in the plans. Any errors shall be corrected by the Owner/Developer at no expense to the Town.

Whenever a conflict occurs in the standard specifications or between the standard specifications and construction drawings, the final interpretation shall be made by the Town Engineering Inspector.

All materials used shall be subject to the inspection and approval of the Town Engineering Inspector at all times. The Town Engineering Inspector has the right to perform any testing deemed necessary to ensure compliance of the material with these standards. Failure to condemn or reject inferior materials or work shall not be construed as acceptance. The Town Engineering Inspector shall have the authority to reject defective or inferior materials and/or defective workmanship and to suspend work until such time that the Owner/Developer has corrected the discrepancies in question.

Whenever defective materials or work is rejected, the Owner/Developer shall promptly remove the materials from the job site and replace all defective portions to the satisfaction of the Town Engineering Inspector. In the event the Owner/Developer fails to remove rejected materials from the job site within a

reasonable length of time, the Town Engineering Inspector may arrange for such removal at the expense of the Owner/Developer. Except in cases of emergency maintenance or protection of work already done, no work shall be allowed between the hours of 7 p.m. and 7 a.m. during weekdays, and 5 p.m. to 8 a.m. on Saturdays, Sundays or legal holidays unless approved by the Director of Development Services.

3-4 Surveying

Line and grade for sewer mains shall be established by a Land Surveyor licensed to practice in the State of Colorado or by his authorized representative.

Correct alignment and elevation of the mains as shown on the approved drawings is the responsibility of the Owner/Developer. Approval of the staked alignment and elevations by the Town Engineering Inspector does not relieve the Owner/Developer in any manner from the responsibility for field errors. Under no circumstances shall pipe be installed without line and grade stakes set by the Surveyor and approved by the Town Engineering Inspector.

Hubs and stakes shall be set on an offset line to mark the location of the center line of the main. Center line hubs and stakes may be used in addition to the offset hubs and stakes; however, they may not be set instead of the offset hubs and stakes.

All valves, crosses, tees, horizontal and vertical bends, fire hydrants, and manholes shall be staked for line and grade. Points of curvature and points of tangency of curves, as well as points on the curve, shall be staked for line and grade.

3-5 Maintenance of Traffic

Contractor shall conduct his work to interfere as little as possible with public travel, whether vehicular or pedestrian. Whenever is it necessary to cross, obstruct, or close roads, driveways, and walks, whether public or private, Contractor shall provide and maintain suitable and safe bridges, detours, or other temporary expedients for the accommodation of public and private travel, and shall give reasonable notice to owners of private drives before interfering with them. Such maintenance of traffic will not be required when Contractor has obtained permission from the owner and tenant of private property, or from the authority having jurisdiction over public property involved, to obstruct traffic at the designated point. Contractor shall conform to the minimum signage and flagging requirements of the U.S. Department of Transportation's Manual on Uniform Traffic Control Devices. A traffic control plan shall be submitted whenever travel on a public thoroughfare is impacted by the construction.

Written approval by the Director of Development Services must be obtained before work can commence.

In making open cut street crossings, Contractor shall not block more than one-half of the street at a time. Whenever possible, Contractor shall widen the shoulder on the opposite side to facilitate traffic flow. Temporary surfacing shall be provided as necessary on shoulders.

3-6 Road Closings

A. General

The Contractor shall not close any street or portion of a street without receiving approval from the Director of Development Services 48 hours prior to closing any street. It is the Contractor's responsibility to notify the Police Department, appropriate Fire District, and School District 38 within 48 hours prior to closing any street which has been authorized. The Contractor shall also notify the Police Department, Fire District, and School District 38 immediately after reopening any street.

All streets, roads, highways, and other public thoroughfares which are closed to traffic shall be protected by effective barricades on which shall be placed acceptable warning signs. Barricades shall be located at the nearest intersecting public highway or street on each side of the blocked section. Barricading shall meet all appropriate ATSSA Standards and be in conformance with the traffic control plan approved by the Development Services Department.

All barricades and obstructions shall be illuminated with warning lights from sunset to sunrise. Material storage and conduct of the work on or alongside public streets and highways shall cause minimum obstruction and inconvenience to the traveling public.

All barricades, signs, lights, and other protective devices shall be installed and maintained in conformity with applicable statutory requirements, and where within railroad and highway right-of-way, as required by the authority having jurisdiction thereof. All barricades and lights shall conform to the U.S. Department of Transportation's Manual on Uniform Traffic Control Devices.

B. Detours

Where required by the authority having jurisdiction that traffic be maintained over any construction work in a public street, road, or highway, and traffic cannot be maintained on the alignment of the original roadbed or pavement, Contractor shall, at his own expense, construct and maintain a detour around the construction work. Traffic shall be maintained at all times on all State highways. Each detour shall include a bridge across the pipe trench and all necessary

barricades, guard rails, approaches, lights, signals, signs, and other devices and precautions necessary for the protection of the work and safety of the public.

C. Permits

A Town permit must be acquired before beginning construction within the right-of-way. This permit list includes, but is not limited to, street cut, jack and bore, and maintenance of traffic permits. Dewatering, local building, Corps of Engineers, and all other permits for work within the State, County, or railroad right-of-way shall be obtained by the Developer prior to the start of construction. All work performed within the limits of the right-of-way shall be in conformity with the requirements, and be under the control of, the authority having jurisdiction.

Contractor must notify owners of private property and utilities when execution of the work may affect them. When it is necessary to temporarily deny access by owners or tenants to their property, or when any utility service connection must be interrupted, Contractor shall give notice 48 hours in advance to enable the affected persons to provide for their needs. Notice will conform to any applicable local ordinances and, whether delivered orally or in writing, will include appropriate information concerning the interruptions and instructions on how to limit their inconvenience.

Utilities and other concerned agencies shall be contacted at least 24 hours prior to cutting or closing streets or other traffic areas or excavating near underground utilities or pole lines.

3-7 Service Interruption

In the event that existing sanitary sewer service will be interrupted as a result of construction, the Owner/Developer shall be responsible for the notification of all affected customers at least 24 hours in advance of the work. All notifications shall be approved by the Director of Development Services. Service interruptions for schools, medical clinics and various commercial businesses shall be conducted at times specified by the Director of Development Services. If outages for more than 4 hours are necessary, they must be conducted at times to cause the least inconvenience to other customers. Under all circumstances, work shall be continuous until all customers are back in service. If, in the process of installing a connection, a facility exists that cannot be without service, such as a hospital, appropriate temporary means shall be taken. Any such measure shall be approved by the Director of Development Services.

3-8 Connections to Existing Mains

Where connections are made between new and existing mains, each connection shall be made as indicated on the drawings. If field conditions make the detailed

connection impossible, then an alternative method approved by the Town Engineering Inspector shall be used.

It shall be understood that the location of existing stubouts, as shown on the drawings, is based on the best available information but is not intended to be exact. The Contractor shall be responsible for performing exploratory excavations prior to the start of installation from, or connection to, a stubout.

The Owner/Developer shall notify the Town Public Works Department, the Town Engineering Inspector, and the District Representative, if applicable, a minimum of 48 hours in advance of intentions to connect to an existing line or to shut off service to an existing line.

At the beginning of a construction project, the Owner/Developer shall install a watertight plug in the connection manhole, or first manhole upstream, in order to prevent any inflow from entering the existing sewer system. After the new sewer system construction is completed and accepted by the Town for service, this plug shall be removed by the Contractor in the presence of the Town Engineering Inspector. All related costs shall be borne by the Owner/Developer and/or Contractor.

3-9 Existing Utilities and Structures

It shall be the responsibility of the Owner/Developer to investigate and verify the existence and location of existing utilities, whether or not they are shown on the plans. The Owner/Developer shall be solely responsible for the protection of all structures or utilities including pipes, cables, fences, or similar items. Permission for adjustment of existing utilities or other items or structures shall be obtained from the appropriate owners or agencies with the concurrence of the Director of Development Services.

3-10 Disconnection of Service

Upon request to the Town, or District if applicable, the Town or District will grant a disconnect certificate to anyone making the request for the demolition of a building. The service connection must be capped off completely. The property will continue to be billed at its regular monthly service charge. The applicable property owner must apply to the Town for a sewer permit before reconnection will be allowed.

3-11 Safety

The Owner/Developer shall be responsible for initiating, maintaining, and supervising all safety precautions and programs in connection with the work.
The Owner/Developer shall comply with all applicable laws, ordinances, rules, regulations and orders of any public body having jurisdiction for the safety of

persons or property or to protect them from damage, injury or loss; and shall erect and maintain all necessary safeguards for such safety of property and utilities when construction of the work may affect them. All damage, injury, or loss to any property caused, directly or indirectly, in whole or in part, by the Owner/Developer, or anyone directly or indirectly employed by any of them or anyone for whose acts any of them may be liable, shall be remedied by the Owner/Developer.

The Owner/Developer's duties and responsibility for the safety and protection of the work shall continue until such time as the work is completed.

3-12 Acceptance of Facilities

Sanitary sewer utilities shall be inspected during installation by the Town Engineering Inspector. Prior to acceptance of the facilities by the Town for the two-year warranty period, the Owner/Developer shall fulfill the requirements below:

A. Initial Acceptance Inspection

Once the installation of all sanitary sewer mains and appurtenances has been completed and all the required tests have passed, the Town Engineering Inspector shall conduct an Initial Acceptance inspection of the project. This inspection shall include all aspects of the sanitary sewer system. All discrepancies shall be noted on a punchlist, which shall be submitted to the Owner/Developer's Representative or Owner/Developer for correction prior to the Town's acceptance of the system and the start of the warranty period.

B. Record Drawings and Easements

In addition to the field inspection requirements noted above, the Owner/Developer shall submit to the Director of Development Services the following documents prior to the commencement of the two-year warranty period:

1. "As-Built" record drawings including plan and profile sheets, one CD in PDF format and two (2) hard copies.

2. Recorded legal descriptions and exhibits for any easements for sanitary sewer lines which were not recorded on the plat.

C. Final Acceptance

Upon satisfactory completion of the two-year warranty period, the Town shall accept the facilities for perpetual maintenance. Failure of the Owner/Developer to address all discrepancies noted on the final punchlist shall result in the extension of the warranty period until the discrepancies have been resolved.

SUBSECTION 4

SANITARY SEWER COLLECTION SYSTEM - DESIGN SPECIFICATIONS

TABLE OF CONTENTS

		Page
4-1	General	21
	A. Scope	21
	B. Engineered and Approved Plans	21
4-2	Sanitary Sewer Main Design Criteria	21
	A. Flow Design Criteria	21
	B. Hydraulic Design	22
	C. Location and Alignment	23
	D. Depth	28
	E. Manholes	28
	F. Underdrain Systems	31
	G. Sewer Main Cleanouts	32
	H. Lift Stations	32
	I. Special Applications	33
	J. Limits of Accuracy	33
	K. Stubouts	34
	L. Materials	34
4-3	Sanitary Sewer Service Design Criteria	34
	A. Flow Design Criteria	34
	B. Hydraulic Design	34
	C. Location and Alignment	35
	D. Depth	35
	E. Manholes	36
	F. Materials	36
	G. Underdrain Systems	36
	H. Sewer Main Cleanouts	36

SUBSECTION 4

SANITARY SEWER COLLECTION SYSTEM - DESIGN SPECIFICATIONS

4-1 General

A. Scope

All sanitary sewer mains, services and related facilities within the Town or any future connections within the Town shall be designed and constructed in accordance with these specifications. Any deviation from these standards shall be approved in writing by the Director of Development Services.

B. Engineered and Approved Plans

All sanitary sewer system construction shall be in accordance with plans prepared under the direction of a Professional Engineer registered in the State of Colorado and approved by the Town.

4-2 Sanitary Sewer Main Design Criteria

A. Flow Design Criteria

1. Domestic Sewage

Sanitary sewer mains designed to transport domestic sewage shall comply with the criteria established in these specifications. Roof drains, foundation drains, sump pumps or storm water drains shall not be connected to the sanitary sewer system. The criteria in the table below shall be considered the minimum criteria and, at the discretion of the Director of Development Services, higher unit flow factors may be required for specific facilities.

QUANTITIES OF WASTEWATER – MIN. AVERAGE UNIT FLOW FACTORS

Type of Use	Unit Flow (Average Daily Flow)	Peaking Factor (Maximum Day vs. Average Day)
Residential: Single Family	300 gpd/DU	See Appendix
Residential: Multi-Family	300 gpd/DU	"
Commercial, Industrial	1500 gpad	"
School with Cafeteria and Gym	25 gpsd	"
School without Cafeteria and Gym	15 gpsd	"
Hospitals	250 gpbd	"

Any use not addressed above shall conform to the fixture unit count table of the most current edition of the International Plumbing Code and the requirements of the Pikes Peak Regional Building Department.

Definitions:

Single Family:	Any detached residential home
Multi-Family:	Any attached residential home
gpd:	Gallons per day
gpad:	Gallons per acre day (gross acres of entire lot)
gpsd:	Gallons per student per day
gpbd:	Gallons per bed per day
DU:	Dwelling Unit

B. Hydraulic Design

Sanitary sewers shall be designed to carry the peak discharge and to transport suspended material such that deposits in the sewer are prevented. The sewer shall have capacity for the peak annual sewage flow with adequate velocity at minimum sewage flows.

Sewer mains shall be designed to provide velocities at peak flow of not less than 2 feet per second nor more than 10 feet per second based on Manning's equation:

$$V = \frac{1.49(R)^{2/3}(S)^{1/2}}{n}$$

Where:
V = average velocity (ft/sec)
R = hydraulic radius (ft)
S = slope of pipe (ft/ft)
n = Manning's roughness coefficient
(n = .013 for ductile iron and PVC pipe)

The maximum depth of flow in the pipe at peak flow shall be 50% of the diameter for lines 12" diameter and smaller; and 75% of the diameter for lines 15" and 18" or larger in diameter.

Although the hydraulic characteristics shall be calculated for each portion of a sanitary sewer main, the following slopes are generally permissible for sewer mains:

Size of Sewer (inches)	Minimum Slope (inch/foot)
8	.0040
10	.0035

Size of Sewer (inches)	Minimum Slope (inch/foot)
12	.0026
15	.0020
18	.0015
21	.0012
24	.0011

Sanitary sewer main sizing shall be determined by the minimum line size on the lowest portion of the system. Line sizing may only be decreased going uphill - and an "upsized" main may not be used to accommodate a flat slope unless all the main line downstream is of equal size or larger.

The minimum diameter for a sanitary sewer main shall be 8 inches.

C. Location and Alignment

1. Sewers in Streets

When sewers are placed in streets, they shall be placed as follows:

a. Collection system sewers shall be placed on the centerline of street sections located midway between curb and gutter on each side of the traveled surface.

b. On streets running north and south where it is not possible to locate the pipe on centerline, the sewer line shall be placed no more than 10’ west of the centerline of the street.

c. On streets running east and west where it is not possible to locate the pipe on centerline, the sewer line shall be placed no more than 10’ south of the centerline of the street.

d. On streets shaped as a “U” or on streets having unusually sharp turns, the sewer line will conform to the above specifications as closely as practical, but the final locations shall be determined by the Director of Development Services or designee. Curvilinear sewer mains shall not be allowed without prior approval of the Town. Designs must attempt to minimize the use of manholes and maximize the operability and maintainability of the collection system.

e. In no case shall a sewer line be installed closer than 5’ from the lip of a pan or gutter.

2. Easements

Sanitary sewer mains shall be located within dedicated streets. However, when such an alignment is not feasible, sanitary sewer mains may be located within a dedicated easement of a minimum width of thirty (30) feet. In some instances, additional width may be required in accordance with Section 2-5 of these specifications.

The sanitary sewer main shall be placed along the centerline of the easement with a minimum depth of cover of five (5) feet. No sewer shall be located less than 5' from the edge of the easement. Manholes shall be placed at each end of the easement at a location that permits access by large, tandem wheel maintenance vehicles. "Jogs" in sanitary sewer mains, and manholes that are located in the back of lots, shall not be permitted. Manholes may be located in dedicated open space or common areas, provided that access is available along the easement with slopes not exceeding 6:1. The minimum change in direction of a sanitary sewer main through a manhole from the incoming (upstream) pipe is 90 degrees.

3. Open Space and Drainageways

When a sanitary sewer line crosses an existing or future drainageway, the line shall cross perpendicular to the drainageway or as close to perpendicular as feasible, unless specified otherwise by federal agencies. If the slope of the drainageway downstream from the crossing exceeds a grade of 0.5 percent within 200 feet of the crossing, a cutoff wall, a minimum of 5 feet deep, shall be poured 10 to 15 feet downstream from the crossing.

All stream drainage channel crossings shall be ductile iron pipe encased in reinforced concrete where the installation is below the flow line of the stream or drainage channel as outlined in the Colorado Springs Utilities Wastewater Line Extension and Service Standard Drawing C1-2, Sheet 3 of 3 (latest edition).

Crossings less than 4 feet below existing or proposed channel bottoms shall be supported by reinforced concrete caissons constructed in accordance with the Colorado Springs Utilities Wastewater Line Extension and Service Standard Drawing C1-2, Sheet 2 of 3 (latest edition).

Where the pipeline crossing will be above the stream or drainage channel flow line, special approval and design will be required by the Town. All details of the design shall be submitted to the Director of Development Services for approval.

4. Railroad, Highway, and Street Crossings

All work shall be accomplished in accordance with the appropriate permit issued by the responsible agency having jurisdiction over the work.

Crossings under railroads, highways, and streets shall consist of polyvinyl chloride (PVC), ductile iron or epoxy coated steel pipe (carrier pipe) laid inside a steel pipe conduit (casing pipe), which is placed beneath the track or roadway. The steel conduit pipe (casing pipe) shall be jacked horizontally through the ground on substantially the grade of the sewer, with due allowance for the bells or joints of the carrier pipe. As the pipe is jacked along, the earth shall be excavated from the face and removed so that it will not be necessary to force the pipe through solid ground. Specifications for materials and installation of the railroad or highway agency shall govern.

The Town reserves the right to require a casing pipe be placed when crossing under a Town street.

The casing pipe diameter for 16-inch and smaller carrier pipes shall be a minimum of 8 inches larger than the carrier pipe, and the casing pipe diameter for larger than 16-inch diameter carrier pipe shall be a minimum of 12 inches larger than the carrier pipe.

After the conduit has been completed, the carrier pipe shall be placed inside and blocked in exact position and grade with a support at least every 8 feet and behind each bell or coupling. A minimum of three blocks or other points of support shall be installed to prevent displacement by floating.

Each end of the casing pipe shall then be plugged tight around the carrier pipe and inside the casing pipe. The plug may consist of a prefabricated rubber boot with stainless steel tightening bands specifically designed for sealing casing pipe ends.

5. Encasement and Casings

a. General

Concrete encasements shall be installed under the following conditions:

1) Where sewer lines are at a depth too shallow to sustain traffic load or any other load to which they are subjected. The depth may range from 0 to 4 feet, depending on the loading conditions.

2) At all locations where infiltration is likely to be significant.

3) At locations where horizontal movement of the sewer mains may be experienced, such as in stream beds with less than 5' of cover.

4) At potable water supply crossings.

5) At any location designated by the Town Engineering Inspector.

b. Design Considerations

1) All concrete encasements shall be reinforced in accordance with Detail 4 and shall be a length to completely span the condition encountered.

2) Unless so designed, encasements are for the purpose of pipeline protection and are not to be considered a structural beam. Therefore, special attention to a good foundation and compaction effort for the encasement must be provided.

3) Pipe casings shall be used where bores are required under rights-of-way by the governing agency. All pipe casings shall be constructed to conform to the Town's standard details, the Colorado Department of Transportation Standards, and the requirements of any other applicable approving agency.

6. Alignment with Other Utilities

Sanitary sewer mains shall be located at least ten (10) feet horizontally from any water main or appurtenance. This distance shall be measured edge to edge unless otherwise approved by the Director of Development Services.

In the event that a sanitary sewer main must cross a water main, the following criteria shall apply:

a. Sanitary Sewer Main Crossing Below a Water Main: If the vertical clearance exceeds 18", no special provisions apply. If the vertical clearance is less than 18", the sanitary sewer main shall be encased in concrete for ten feet on each side of the crossing.

b. Sanitary Sewer Main Crossing Over a Water Main: If the vertical clearance exceeds 18", no special provisions apply. If the vertical clearance is less than 18", the sewer main shall be encased in concrete for ten feet each side of the crossing. If the vertical clearance is less than 12", the water main shall also be ductile iron pipe with no pipe joint closer than ten feet from the crossing.

c. All joints shall include rubber gasketed fittings with stainless steel tightening bands. The joints shall be enclosed in a concrete collar at least six (6) inches thick and extending at least six (6) inches on either side of the joint.

The above-described protection from potential cross connections shall apply to service lines as well as sanitary sewer mains where the above described protection and special installation are required.

In the event that a sanitary sewer main must cross a storm sewer line, the following criteria shall apply:

a. Sanitary Sewer Line Crossing Over a Storm Sewer Line: If the vertical clearance is less than 18", the storm sewer joints shall be encased in concrete for ten feet on each side of the crossing.

b. Sanitary Sewer Line Crossing Below a Storm Sewer Line: If the vertical clearance is less than 18", encase the sanitary sewer line 10' each side of the crossing. Ductile iron pipe may be used in lieu of an encasement for the sanitary sewer line.

7. Curvilinear Mains

Sanitary sewer mains shall follow horizontally straight alignments between manholes whenever possible. In the event that such an alignment results in a substantial increase in the number of manholes, curvilinear sewers may be permitted as directed by the Director of Development Services. Curvilinear sewers shall parallel the street centerline or easement centerline from to manhole with the radius of curvature exceeding the minimum as noted below:

Pipe Diameter	Minimum Radius of Curvature
8"	200 feet
10"	250 feet
12"	300 feet
15”	350 feet
18”	400 feet

The curvature of the sewer main shall be achieved by a uniform deflection of the pipe joints up to 2 degrees. Angle fittings are permitted. Curvilinear sewers may either be a continuous curve from manhole to manhole or a single transition from "tangent to curve" or "curve to tangent".

D. Depth

All sanitary sewer mains shall be designed so that cover exists over the top of pipe after final grade has been established as set forth in these specifications.

In general, sewers shall be designed deep enough to drain basements and to prevent freezing. No public mains shall be less than 5 feet deep measured from the top of pipe unless special protection is provided. Special protection shall consist of the use of ductile iron pipe, reinforced concrete encasement, or arch.

E. Manholes

1. Spacing

Manholes shall be installed at the end of each line, at all changes in grade, size, or alignment, and at all junctions or intersections of sewer mains. Manholes shall be spaced at distances not greater than 500 feet for 8-inch through 21-inch sewers with a straight horizontal alignment. Curvilinear sewers shall have manholes at distances not greater than 300 feet.

2. Type and Sizing

Except as otherwise specifically approved by the Town, manholes shall be precast concrete consisting of a base, barrel sections, and an eccentric cone section, and manufactured in accordance with the referenced specifications.

Size of Sewer Main	Inside Diameter of Manhole
8 inches through 36 inches	5’
Greater than 36 inches	6’

3. Hydraulic Design

Manholes shall have a minimum drop across the manhole of 0.2 foot along the flow channel. At manholes where there is a change in pipe diameter, the crown elevation of the pipes shall match.

Head losses through manholes shall be 0.20 foot loss for a "straight run" or intersection greater than 90 degrees to the outlet line; and 0.30 foot loss for 90 degree intersections to the outlet main.

4. Drop Manholes

In any manhole where the invert between the inlet line and outlet line exceeds 18 inches, an outside drop manhole shall be constructed. Drop manholes shall have cleanout assemblies in accordance with Detail 10. The entire manhole structure shall be completely lined with a coal tar epoxy coating in accordance with Section 5-6E.8.

5. Service Connections to Manholes

a. In general, sewer service lines will not be allowed to connect to manholes. Certain exceptions, however, may be made by the Town. No sewer service shall connect to the main line closer than 5' to the upstream manhole. Services which follow an alignment behind a dead-end manhole shall be connected to the system by means of a five-foot stub of 8" main which is extended beyond the manhole and contains wyes for the service lines. No more than four service lines may be connected behind a dead end manhole.

b. Manholes which are more than sixteen (16) feet from the finished cover to the pipe invert shall be considered deep manholes subject to special design. The items below shall be given special attention and subject to approval by the Town.

1) Intermediate platforms constructed with manhole shaft offsets shall be governed by OSHA regulations. Regardless of the application of OSHA regulations, an offset intermediate platform will be required on any manhole greater than 24 feet in depth at no more than 12-foot intervals.

2) Structural integrity of precast or cast-in-place concrete structures shall be verified and certified by the responsible design professional for all manholes in excess of 16 feet in depth. Specific attention shall be given to concrete thickness, reinforcing design, and concrete strength.

6. Ring Adjustments

Manholes shall be constructed to permit grade adjustments by use of precast concrete adjusting collars not to exceed a total height of 12 inches.

7. Watertightness

Precast concrete manhole joints shall be made watertight. Manholes of brick or segmented block shall not be used in the sanitary system.

a. Each precast manhole segment shall be joined with a rubber “O” ring, Ram-Nek, Con-Seal, or similar approved material.

b. All concrete manhole joints above the flow channel shall receive a ⅜” to ½” thick coating of cement grout. Concrete surfaces shall be thoroughly wetted and damp prior to the application of cement grout. Liquid membrane curing compound shall be applied to the finished cement grout surface to facilitate proper curing. Cement grouting shall be applied prior to the application of dampproofing material and the liquid membrane curing compound shall be deleted. Exterior cement grout shall be film cured utilizing polyethylene sheets. The Town reserves the right to require the entire interior surface above the flow channel to receive a ⅜” to ½” thick coating of cement grout, dependent upon existing ground water conditions.

c. All exterior concrete manhole surfaces shall be coated with coal tar dampproofing material. Where ground water is present or, in the opinion of the Town, ground water could be present, the entire manhole structure shall be completely lined with coal tar dampproofing material. The joint shall be wrapped with an external elastomeric concrete joint wrap covering the area. The need for exterior cement grouting will be determined by the Town.

d. Dampproofing materials shall be applied to clean, dry surfaces in accordance with the coating manufacturer’s written instructions/recommendations and the following:

1) Preparation

a) Examine surfaces to receive dampproofing to assure conditions are satisfactory for application of materials.

b) Remove dirt, dust, sand, grit, mud, oil, grease, and other foreign matter.

c) Brush down surfaces to remove all loose scale, fins, dust, etc.

d) Complete surface preparation in accordance with manufacturer’s recommendations.

2) Application

a) General

i. Apply in three (3) coats with high pile rollers or by spray equipment.
   Minimum air pressure: 90 psi
   Spray apply in a fine mist

ii. Provide adequate forced ventilation when applying coating in enclosed spaces.

iii. Do not use benzol or other volatile solvents for thinning coating.

b) First Coat

i. Apply only when surface of concrete is dry and at a suitable temperature for adequate penetration.

ii. Thin as recommended by manufacturer.

iii. Apply for maximum penetration.

iv. Absorbed by concrete within 5 to 30 minutes of application so no continuous film remains on surface.

c) Second Coat: Cover surface with 5 mil film.

d) Third Coat: Produce a high gloss 5 mil film.

e) Cure materials as recommended by manufacturer.

f) Do not cover with backfill until installation is accepted by the Town.

F. Underdrain Systems

Underdrains shall not be considered part of the sanitary sewer system and are not required by, nor are they the responsibility of, the Town. Underdrains shall only be permitted to convey groundwater which may accumulate around building foundations. Roof drains and other surface water collection systems shall not discharge into the sanitary sewer system.

The underdrain systems shall be designed by the Owner/Developer's consulting engineer in conjunction with the recommendations of the Owner/Developer's soils engineer. The type of underdrain (i.e., gravel, solid or perforated pipe, etc.) as well as the capacity and sizing shall be submitted to the Director of Development Services for approval.

Although not part of the sanitary sewer system, a detailed drawing of any underdrain cross-section shall be included on the sanitary sewer plans.

The underdrain systems shall be designed and constructed as a groundwater conveying system independent of the sanitary sewer line foundation and bedding material. No allowance shall be taken for the porosity of the sewer main bedding material in calculating the underdrain capacity to drain freely from the system. Underdrain systems shall have adequate daylight points to permit the groundwater to drain freely from the system. When a daylight line leaves the underdrain trench, a clay or concrete cutoff wall shall be constructed immediately downstream in the underdrain trench so that the groundwater will follow the daylight line.

Where an underdrain must be used, the underdrain must be carried under or around the manhole base. In no case shall any underdrain, sump pump, or trench drain be connected to the public sewer main.

When passing around or below manholes, underdrain systems shall be constructed of a solid wall pipe to prevent water from accumulating around the manhole. The solid wall pipe shall extend a minimum of one joint of pipe or 13 feet +/- upstream of each manhole. Horizontal separation between underdrain and sewer main shall be a minimum of 6 inches. Under no circumstances shall a sump condition exist below the manhole base. Cutoff walls may be required upstream of the manhole. Underdrain cleanouts shall not be installed in sanitary sewer manholes.

Active groundwater underdrains shall be constructed of perforated PVC pipe SDR 35 or Schedule 40, in a gravel bed of 3/4” clean rock consolidated using vibratory methods acceptable to the Town Engineering Inspector. The flow line of the groundwater underdrain shall be located approximately 2” below the flow line of the sanitary sewer pipeline. If inactive underdrains are to be used, then solid wall SDR 35 PVC pipe shall be used unless otherwise approved by the Town. Groundwater underdrain stubs to the property line shall be 3” diameter pipe and constructed of Schedule 40 or SDR 35 PVC pipe.

G. Sewer Main Cleanouts

The use of sewer main cleanouts shall not be permitted.

H. Lift Stations

Only upon demonstration as to viability and the lack of an acceptable alternative, and upon demonstration to the Director of Development Service’s satisfaction that gravity service is not feasible, will lift stations be permitted. Lift stations shall not be used as an alternative to extending a gravity service line which may be longer or deeper than normal.

Lift stations shall be designed by the Owner/Developer's Engineer and shall include a comminutor or grinder for all solids. The force main shall be sized for the maximum discharge flow from the pump.

All lift station designs shall be submitted to the Director of Development Services for approval. The use and design of the lift station shall also be approved by El Paso County Department of Health and Environment, and the State of Colorado Department of Public Health and Environment (CDPHE).

All costs for the construction of the lift station, force main, and gravity sewer lines shall be the sole responsibility of the Owner/Developer.

As general guidelines for planning purposes, any lift station to be considered by the Town must include, at a minimum, the following:

1. Dry pit or wet well mounted pumping equipment.
2. Multiple pumps.
3. Standby power generation or dual source of power supply.
4. Ventilation, heating, and dehumidification equipment.
5. Automatic controls.
6. Remote alarm system for operating functions.
7. Emergency overflow storage.

I. Special Applications

Special applications or designs of sanitary sewer systems, such as lift stations, siphons, elevated pipelines, etc., are generally not permitted. Any situations which dictate the need for such an application shall be presented in the form of a written request and preliminary design to the Director of Development Services for approval.

J. Limits of Accuracy (Allowable Error)

Limits of accuracy shall refer to the horizontal and vertical deviation that is permissible during the laying of sewer mains. The allowable error shall be a maximum of plus or minus two one hundredths of a foot (± 2/100 ft.) for lines designed at one percent or less in a vertical direction. Lines designed at greater than one percent slope shall be a maximum of plus or minus one tenth of a foot (± 1/10 ft.) in a vertical direction. In a horizontal direction the allowable error shall be a

maximum of three tenths of a foot. Any line that does not meet these criteria shall be removed and relaid.

On curvilinear mains, the maximum horizontal deviation shall not exceed plus or minus three tenths of a foot (± 3/10 ft.).

K. Stubouts

Stubouts from manholes shall not exceed 18" in length for lines without service connections. For lines with service connections, stubouts shall not exceed 40 feet. Whenever practical, designs to complete the manhole run shall be submitted to the Director of Development Services for review to insure proper grade and alignment for future construction. Future extensions of stubouts shall be of like material using the same grade and alignment.

L. Materials

All materials for the sanitary sewer collection system shall be in accordance with Subsection 5 of these specifications.

4-3 Sanitary Sewer Service Design Criteria

A. Flow Design Criteria

Flow design criteria for residential and non-residential sanitary sewer service lines shall be based on the estimated flow in accordance with the Owner/Developer's architect or mechanical engineer and shall comply with the most current International Plumbing Code.

B. Hydraulic Design

Service lines shall be designed to carry the peak discharge and transport suspended materials from the building sewer to the collection main. Service lines shall be laid to a constant grade between the collection main and the outlet of the building sewer. In situations where the collection main is deeper than 20 feet, the service line may be laid at a constant slope to a point where an angle fitting is installed to make a relatively steep (45 degree) connection to the collection main.

Although the hydraulic characteristics of each sanitary sewer service line shall be calculated by the Owner/Developer's engineer, the following slopes are generally permissible for service lines:

Diameter	Minimum Slope (inches/foot)	Minimum Fall (inches/foot)
4"	0.0208	1/4
6"	0.0104	1/8

The minimum diameter for a sanitary sewer service line shall be 4 inches.

C. Location and Alignment

Each single family residential detached or attached dwelling unit shall have a separate sanitary sewer service line and tap. Townhomes, condominiums, and apartments which are designed to utilize common plumbing within the structure may have a service line that serves more than one dwelling unit.
Service lines shall follow a straight horizontal alignment between the outlet of the building sewer and the connection to the collection main. In the event that a horizontal deflection is necessary, a cleanout may be required, per Section 4-3H.

Sanitary sewer service lines are to be placed 10 feet from water lines in separate trenches.

Alternatively, sanitary sewer service lines may be placed in a common trench with a water service line providing the following conditions exist.

1. The water service line is HDPE.

2. The subgrade bench for the water service line is of undisturbed soil with a minimum width of twelve (12") inches.

3. The top of the sanitary sewer service line is located a minimum of eighteen inches (18") below the water service bench.

Sanitary sewer service lines shall be located at the center of each single-family residential lot, unless otherwise approved by the Town Engineering Inspector. The service line location is limited to the property it serves, or within public rights-of-way.

Service lines may not cross private property without an easement being dedicated to the property owner being served by the service line.

In the event that two service lines are located at the same station on the main line, the service wye for the lot on the long side of the street shall be placed a minimum of three feet downstream of the adjacent service wye. When the service lines are the same length the service wye for the service lines on the east or north side of the street shall be placed a minimum of two feet downstream of the adjacent service. The service line shall extend from the main to the lot in an orientation that is parallel with the lot line or perpendicular with the main.

D. Depth

All sanitary sewer service lines shall be designed so that a minimum of four (4) feet of cover exists over the top of pipe after final grade has been established, unless otherwise approved by the Town Engineering Inspector. Under no circumstances shall PVC ASTM D2321 SDR 35 pipe be used with less than three (3) feet of cover.

E. Manholes

Manholes for sanitary sewer service lines 8" diameter and larger shall comply with Section 5-2-E of these specifications. Manholes for sanitary sewer service lines shall be required for the purposes of monitoring or sampling in accordance with the Town of Monument/Triview Metropolitan District Industrial Pretreatment Program, which regulations are attached as an addendum to the Town's Site Plan Improvement Agreement.

F. Materials

All materials for sanitary sewer service lines shall be in accordance with Subsection 5 of these specifications.

G. Underdrain Systems

Underdrain systems which are installed in conjunction with sanitary sewer service lines shall comply with all provisions of Section 5-4G of these specifications.

H. Sewer Service Cleanouts

Cleanouts shall be installed on sewer service lines at all points of horizontal deflection of 45˚ or greater, and on service lines which exceed 100 feet in length. The cleanout diameter shall match the nominal diameter of the service line and shall be constructed in accordance with Detail 16.

All commercial service lines greater than 100' in length shall require dual cleanouts.

Cleanouts shall be located so that at ground surface, water does not accumulate. When cleanouts are located in existing or future landscape area, the cleanout cover shall be 4-6 inches above finished grade.

When the cleanouts are located in paved areas, a concrete collar and traffic bearing lid shall be installed pursuant to Detail 16.

SUBSECTION 5

SANITARY SEWER COLLECTION SYSTEM – MATERIALS AND INSTALLATION

TABLE OF CONTENTS

			Page
5-1	General		39
	A.	Scope	39
	B.	Engineered and Approved Plans	39
5-2	Definitions		39
5-3	Reference Standards		40
5-4	Sanitary Sewer Main Materials and Appurtenances		41
	A.	Polyvinyl Chloride Pipe - PVC SDR 35	41
	B.	Polyvinyl Chloride Fittings	41
	C.	Ductile Iron Pipe	42
	D.	Concrete	43
	E.	Grout	45
	F.	Manhole Rings and Covers	46
	G.	Bedding Materials	46
	H.	Manhole Steps	48
	I.	Flexible Plastic/Rubber Joint Sealing Compound	49
	J.	O-Ring Joint for Precast Concrete	49
	K.	Coal Tar Epoxy Lining	49
5-5	Sanitary Sewer Service Materials		50
	A.	Polyvinyl Chloride Pipe - PVC	50
	B.	Ductile Iron Pipe	50
	C.	Bedding Materials	50
	D.	Sanitary Sewer Service Fittings	50
	E.	Tapping Saddles	51

	F.	Pipe Adapters/Couplings	51
	G.	Lamphole/Cleanout Ring and Cover	51
5-6	Sanitary Sewer Main Installation		51
	A.	Excavation and Trenching	51
	B.	Pipe Foundations and Bedding	66
	C.	Trench Backfilling and Compaction	68
	D.	Installation of Sanitary Sewer Main	72
	E.	Installation of Manholes	74
	F.	Alignment and Grade Testing	77
	G.	Exfiltration and Infiltration Testing	78
	H	Manhole Vacuum Testing	80
	I	Cleaning	81
5-7	Sanitary Sewer Service Installation		82
	A.	Excavation	82
	B.	Pipe Foundation and Bedding	82
	C.	Trench Backfilling and Compaction	82
	D.	Installation of Sanitary Sewer Service Line	82
	E.	Installation of Service Line Taps	83
5-8	Grease Traps and Grease Interceptors		84
	A.	General	84
	B.	Definitions	85
	C.	Design and Sizing	85
	D.	Installation	89
	E.	Maintenance	90
	F.	Regulation	92
	G.	Application	93
5-9	Sand/Oil Interceptors		94
	A.	Regulation	94
	B.	Definitions	95
	C.	Design and Sizing	95
	D.	Installation	97
	E.	Maintenance	98

SUBSECTION 5

SANITARY SEWER COLLECTION SYSTEM - MATERIALS AND INSTALLATION

5-1 General

A. Scope

All sanitary sewer system construction within the Town shall be performed in accordance with these specifications. Any deviation from these specifications shall be approved in writing by the Director of Development Services.

B. Engineered and Approved Plans

All sanitary sewer system construction shall comply with construction plans prepared under the direction of a Professional Engineer registered in the State of Colorado and approved by the Director of Development Services. Construction shall not begin without approved construction plans and specifications.

5-2 Definitions

Backfill

Material used in refilling a trench or other excavation above the pipe or utility.

Compaction

The process of mechanically stabilizing a material by increasing its density at a controlled moisture condition. "Degree of Compaction" is expressed as a percentage of the maximum density obtained by the test procedure described in ASTM D1557 or ASTM D698 for general soil types. An example abbreviation in this specification is "90% ASTM D1557 maximum density".

Pipe Bedding

A dense, well-graded aggregate mixture of sand, gravel, or crushed stone (mixed individually, in combination with each other, or with on-site soil) placed on a subgrade and extended around pipe as shown in Detail 3. See Section 5.4-G for specific material requirements.

Unyielding Material

Rock or solid with cobbles in the trench bottom requiring a covering of finer grain material or special bedding to avoid bridging the pipe or conduit.

Unstable Material

Material in the trench bottom which lacks firmness to maintain alignment and prevent joints from separating in the pipe, conduit, or appurtenant structure during backfilling. This may be material otherwise identified as satisfactory which has been disturbed or saturated.

Lift

A layer or course of soil placed on top of unprepared subgrade or previously prepared or placed soil in a fill or backfill.

Rock

Any material which cannot be excavated with a track-mounted 235 Caterpillar or equivalent backhoe with a 12-inch bucket, and teeth, and which requires the use of special buckets, rock teeth, jack-hammering, and/or other special methods of excavation. Blasting is not permitted.

Unsatisfactory Material

Soil or other material identified as having insufficient strength or stability to carry intended loads on trench backfills without excessive consolidation or loss of stability. This also includes backfill material which contains refuse, frozen material, large rocks, debris and other material which could damage the pipe or cause the backfill not to compact. As a minimum, materials classified as PT, OH, or OL by ASTM D2487 are unsatisfactory.

Crushed Rock

Manufactured crushed stone with at least 3 angular faces.

5-3 Reference Standards

This section references the following entities. They are a part of this section as specified and modified. In case of conflict between the requirements of this section and the listed documents, the requirements of this section shall prevail.

Reference	Title
AASHTO	*American Association of State Highway and Transportation Officials*
ACI	*American Concrete Institute*
ANSI	*American National Standards Institute*

ASTM	*American Society for Testing and Materials*
AWWA	*American Water Works Association*
CDOT	*Colorado Department of Transportation, Division of Highways, "Standard Specifications for Road and Bridge Construction", latest edition (Sections 100 through 109 and measurement and payment provisions do not apply)*

5-4 Sanitary Sewer Main Materials and Appurtenances

All pipe materials used in the construction of the sanitary sewer system shall conform to the requirements specified herein. Any other material proposed as an equal must be approved by the Director of Development Services in writing prior to construction. All materials furnished shall be new and undamaged. Everything necessary to complete all installations in accordance with these specifications shall be furnished and installed whether shown on approved drawings or not, and all installation shall be completed so that the sewer system is fully operable.

A. Polyvinyl Chloride Pipe - PVC SDR 35

All PVC pipe 15 inches in diameter and smaller furnished under this specification shall be manufactured in strict accordance with ASTM Standard D 3034 and ASTM D 1784.

Material - All PVC plastic shall have a minimum cell classification of 12354-B in accordance with ASTM D 1784.

Thickness Class - Pipe furnished under this specification shall have a DR ratio of 35, unless otherwise approved by the Director of Development Services.

Laying Lengths - Pipe shall have a normal laying length of 13 feet.

B. Polyvinyl Chloride Fittings

PVC fittings shall only be permitted for service connections such as tees and wyes. PVC fittings shall be manufactured in strict accordance with ASTM D1784, ASTM D3034, ASTM F477 and ASTM F679. Joint type shall be identical to that of the pipe. **The use of solvent weld fittings is not permitted.**

Joints – ASTM D3212; Bell and spigot, push-on with single rubber gasket. Jointing of dissimilar pipe materials shall be accomplished with a specially manufactured rubber connection with stainless steel tightening bands (Mission Rubber Company, Fernco, or equivalent).

Criteria for Acceptance – Pipe which has any of the following defects will not be accepted.

1. Improperly formed pipe such that pipe intended to be straight has an ordinate, measured from the concave side of the pipe, exceeding 1/16 inch per foot of length.

2. Pipe which is out-of-round to prohibit proper jointing.

3. Improperly formed bell and spigot ends or bells which are less than 1-1/2 inches in length.

4. Pipe which is fractured, cracked, chipped or damaged in any manner.

5. Pipe that has been damaged during shipment or handling.

C. Ductile Iron Pipe

Ductile iron pipe furnished under this specification shall be manufactured in strict accordance with AWWA Standard Specification C151, as amended, with the following additional requirements:

Size of Pipe - This specification shall cover all sizes of ductile iron pipe 24 inches in diameter and smaller.

Joint Type - All ductile iron pipe joints shall conform to the following requirements:

1. Mechanical Joint: ANSI A21.11

2. Push-On: ANSI A21.11

3. Flanged: ANSI B16.1, 125 lb. drilling

4. Rubber Gaskets: AWWA C111 (ANSI A21.11)

Thickness Class - Pipe furnished shall be Class 50 for all sizes 6” in diameter and larger. Pipe 4” in diameter shall be Class 52. The preceding classes are minimum and higher classes may be required, as specified on the construction plans.

Laying Length - Pipe furnished shall have a normal laying length of 18 feet or 20 feet.

Grade of Iron - Iron used in the manufacture of pipe shall have 60/42/10 iron strength.

Polyethylene Wrapping – All ductile iron pipe shall be installed with an 8 mil thick polyethylene wrapping. The polyethylene wrapping shall conform to AWWA C105, latest revision.

Epoxy Lining - All pipe furnished shall have an epoxy lining in accordance with the criteria in Subsection 5-4K of these specifications.

Criteria for Acceptance – In addition to any deficiencies covered by the referenced specifications above, any of the following visual defects will not be accepted.

1. Improperly formed pipe such that pipe intended to be straight has an ordinate, measured from the concave side of the pipe exceeding 1/16 inch per foot of length.

2. Pipe which is out-of-round to prohibit proper jointing.

3. Pipe which is fractured, cracked, chipped or damaged in any manner.

4. Pipe that has been damaged during shipment or handling.

5. Pipe which has lining that is fractured, cracked, chipped or damaged in any manner and would not provide satisfactory service under the conditions intended.

D. Concrete

1. Precast Concrete Vaults and Manholes

Precast vaults and manholes shall conform to the size, shape, form, and details shown on the Plans. Concrete for precast manhole units shall be Class A concrete. The precast cylinder units, the precast concrete taper sections, and precast concentric cone sections shall meet the strength requirements for ASTM Designation C478, "Precast Reinforced Concrete Manhole Sections". All vaults and manholes shall be adequate to withstand AASHTO H-20 loading and shall be designed in accordance with ACI 3-1 - "Specifications for Structural Concrete for Building". Shop drawings for structures not specified in the Standard Detail Drawings shall be submitted to the Director of Development Services for approval at least 3 weeks prior to installation. A minimum amount of steel hoops of No. 4 wire shall be cast into each unit at adequate places for handling. A flexible plastic joint sealing compound shall be used between each manhole section so as to provide a watertight joint.

Manholes shall have a minimum wall thickness of 5 inches for depths up to 11 feet. For depths greater than 11 feet, the minimum wall thickness shall be 6 inches.

2. Pipe Encasement

All concrete encasements shall be reinforced in accordance with Detail 4. Concrete for encasement shall be Class “B" as defined in these specifications.

3. Materials

Concrete shall be defined as two classes, Class "A" Concrete and Class "B" Concrete.

Class "A" Concrete shall be used for all cast-in-place and precast concrete structures.

Class "A" Concrete shall have a maximum allowable water/cement (w/c) ratio of 0.50 by weight. The w/c ratio may be decreased to 0.45 by weight by the addition of a water reducing agent (WRA) conforming to "Standard Specification for Chemical Admixtures for Concrete", ASTM Designation C494 - Type A, provided that the WRA is approved by the Engineer-of-Record. The WRA, in suitably diluted form, may be added to water containing an air-entraining agent for the batch, providing the materials are compatible with each other. If the two are incompatible, they shall be introduced separately.

Class "B" concrete shall be used for all concrete thrust blocks, protective pads, and concrete encasements. The Class "B" concrete shall have a maximum w/c ratio of 0.63 by weight. The w/c ratio may be increased to 0.70 by the addition of a WRA as specified above.

All cast-in-place concrete utilized in sanitary sewer construction shall have a minimum compressive strength of 3000 psi at 28 days unless specifically required otherwise by the project.

a. Aggregates – Conform to ASTM C33, maximum size shall be ¾-inch nominal diameter.

b. Cements – Portland Cement in accordance with ASTM C150. Type II or IILA will be used for all concrete.

c. Admixtures – Air entraining admixtures will be permitted in conformance with ASTM C260. Maximum entrained air shall be 6.5% and minimum shall be 5.0%. Water reducing and retarding

admixtures may be utilized with specific approval of the Town. Such admixtures shall be in conformance with ASTM C493. Flyash or calcium chloride are not permitted for use.

d. Slump – Maintain within the following limits: 1" minimum, 3" maximum for all concrete to be incorporated in sanitary sewerage facilities.

A minimum of 10 days prior to starting concrete work, the contractor shall submit for approval, samples of the various aggregates to be used in the final mix and the concrete mix he proposes to use. The source of each sample of aggregate shall be stated. After approval of the aggregates and concrete mix, no change shall be made in the source of aggregates or concrete mix without written approval of the Director of Development Services.

Class "A" Concrete shall have a minimum 28-day compressive strength of 3000 psi for cast-in-place structures and a minimum 28-day compressive strength of 4000 psi. for precast structures.

Class "B" Concrete shall have a minimum 28-day compressive strength of 3000 psi.

4. Concrete Reinforcement

All deformed reinforcing bars shall conform to ASTM Standard A615, Grade 40 or 60, or ASTM Standard A617, Grade 40 or 60. All welded steel wire fabric shall conform to ASTM Standard A185 except that the weld shear strength requirement shall be extended to include a wire size differential up to and including six gauges.

E. Grout

1. Cement Grout

a. Cement - Portland Cement in accordance with ASTM C150, Type II or II LA.

b. Sand – Clean, well-graded, natural sand in accordance with ASTM C33.

c. Proportioning – One part Portland Cement, 2-½ parts sand, by weight, with minimum water required for placement and hydration.

2. Non-Shrink Grout

   a. Approved commercial factory mix product made especially for intended use.

   b. Utilize non-metallic chemical grout for non-shrink application

F. Manhole Rings and Covers

Manhole rings and covers shall be cast iron in accordance with ASTM A48, Class 35 B. Twenty-four inch diameter assemblies shall be the "Denver heavy" style with a combined weight of not less than 400 pounds (approximate distribution: Frame - 235 lbs., Lid - 165 lbs.). Covers shall be manufactured as shown on the plans with the appropriate lettering and checkered pattern. All bearing surfaces shall be machined to the tolerances shown on the drawings. Manhole lifting holes shall be manufactured with an elongated oval hole per Detail 13. Manhole lids with more than one lifting hole shall not be accepted. Rim elevation shall be 4 inches above grade in open space and shall be 0 to ½-inch below grade of any finished surface.

G. Bedding Materials

Pipe Bedding shall be Class A-1, A-2, B, or C.

Pipe bedding shall be defined as that portion of the pipe zone which extends from 6 inches below the bottom of the pipe to 12 inches above the top and along the sides of the pipe.

Bedding material shall be an approved granular material or engineered fill, free from organic matter and of such size and gradation that the specified compaction can be readily attained. As a minimum, granular materials shall have a sand equivalent value of not less than 20 with a coefficient of uniformity of 3 or greater.

Class A bedding shall be used for the bedding of ductile iron and PVC sanitary sewer main at depths of cover less than 15 feet. Class B bedding shall be used in situations where the pipe is installed at a depth of cover that is 15 feet or greater, as recommended by the pipe manufacturer.

Class A bedding shall have two designations:

1. Class A-1
2. Class A-2

Class A-1 bedding as defined with these limits shall be used only during the warm weather periods of the year. Warm months shall be determined by the Town Engineering Inspector. Materials meeting this designation shall be

consolidated in the ditch by means of a vibratory plate to insure that the material has been uniformly distributed around the pipe. These materials shall not be used during the winter months.

Class A-2 bedding as defined with these limits may be used year round and shall be used during the cold weather period of the year. Cold months shall be determined by the Town Engineering Inspector.

Class A-1 bedding shall conform to the following limits when tested by means of laboratory sieves:

Size	Total Percent Passing by Weight
3/8"	100%
No. 8	65% - 100%
No. 50	10% - 30%
No. 100	0% - 10%

This specification conforms to CDOT specifications for squeegee-type bedding materials.

Class A-2 bedding material shall conform to the following limits:

Sieve Size	Total Percent Passing by Weight
3/8"	100%
No. 4	60% - 90%
No. 8	0% - 45%
No. 50	0% - 6%
No. 100	0% - 6%
No. 200	0% - 2%

Class B bedding shall be used for the bedding of PVC sanitary sewer main at depths of cover greater than 15 feet. Class B bedding shall be clean, crushed aggregate, conforming to ASTM D448 as follows:

Sieve Size	Total Percent Passing by Weight
1"	100%
3/4"	90% - 100%
3/8"	20% - 55%
No. 4	0% - 10%
No. 8	0% - 5%

The Owner/Developer shall provide, upon request, certified test results of the bedding material confirming compliance with the above standard, and a sample of the material.

Class C Bedding (Concrete Cradle). A concrete cradle bedding shall be used only when approved by the Town Engineering Inspector. The pipe shall be bedded in unreinforced concrete having a minimum thickness of one-fourth of the inside pipe diameter, or a minimum of 6 inches, whichever is greater, under the pipe bottom and extending up the sides to the horizontal center of the pipe ("spring line"). The backfill above the cradle shall be densely compacted to obtain a Standard Proctor density of 95% as determined by AASHTO T99, and shall extend 12 inches above the crown of the pipe.

Groundwater Barrier. Barrier material shall meet soil classification GC, SC, CL, or ML-CL. Material may be finely divided suitable job excavated material, free from stones, organic matter, and debris.

Stabilization Material. If the existing top 6 inches of soil in the trench bottom is deemed to be unsuitable by the Town Engineering Inspector, the unsuitable material shall be removed and replaced with stabilization material.

Stabilization material is crusher-run rock, conforming to CDOT Size #4.

U.S. Standard Sieve Size	Percent Passing by Weight
2"	100%
1-1/4"	90% - 100%
3/4"	50% - 90%
No. 4	30% - 50%
No. 200	3% - 12%

Geotextile: CDOT, Section 712.08, Class A Table 712-2.

Subgrade below top 6 inches - same as top 6 inches except that broken concrete and rock may be included in sizes permitting compaction as specified in Section 5-6C without discernible voids.

H. Manhole Steps

Manhole steps shall be aluminum or polypropylene in accordance with the specifications below. Manhole steps shall be no more than 18 inches from the rim elevation of the manhole ring nor more than 18 inches from the top of the bench of the manhole. Steps are to be placed at a maximum 12-inch vertical spacing, if necessary. All steps shall have adequate treads.

Aluminum steps shall be Alcoa No. 12653-B in accordance with Detail 14, or approved equal. Aluminum steps shall be cast into the concrete manhole wall at the same time the manhole section is cast. Steps shall carry a minimum load of 1000 lbs.

Polypropylene steps shall be constructed of a co-polymer polypropylene shell reinforced with a 1/2" diameter steel rod (Grade 60). Polypropylene step shall be model PS-2-PF as manufactured by M. A. Industries, or approved equal. The step shall have impact strength of 300 foot-pounds and, when installed, shall resist a pullout force of 600 pounds. The step may be installed in a preformed hole or cast in place as part of the manhole or vault.

I. Flexible Plastic/Rubber Joint Sealing Compound

Preformed flexible plastic/rubber joint sealing compound shall meet Federal Specifications SS-S-00210 "Sealing Compound, Preformed Plastic/Rubber for Pipe Joints" and AASHTO M-198 75 1, Type B. The sealing compound shall show no visible deterioration when immersed separately in a solution of acid, alkaline and saturated hydrogen sulfide for a period of 30 days. The plastic/rubber gasket shall be "Ram-Nek" manufactured by Henry Company or approved equal.

J. O-Ring Joint for Precast Concrete

In lieu of a flexible plastic/rubber joint sealant, an "O-ring" joint may be used for sealing two sections of precast concrete. O-ring shall meet ASTM C443 with a minimum diameter of 3/4". Lubricant shall be used as recommended by the O-ring manufacturer.

K. Coal Tar Epoxy Lining (Dampproofing)

The interior of all manhole structures shall receive coal tar epoxy lining.

Dampproofing may be completed at the manhole fabrication yard

If dampproofing is to be applied on site, the product shall be delivered in original unopened containers with labels intact. Dampproofing material shall not be allowed to freeze.

The coal tar epoxy shall be a two (2) component polyamine coating having the following physical characteristics:

Color: Black - Glossy
Mil thickness: 50 mil minimum (average)
45 mil absolute (minimum)

Touch Dry: 10 hours (will vary with temperature)
Heat resistance (wet): 160 Degrees Fahrenheit

Acceptable manufacturers of Coal Tar:

a. Koppers “Bitumastic Super Black Solution”.
b. Tnemec “449 Tnemecol”.
c. Porter “Tarmastic 100”.
d. Approved equal.

The coating shall be so formulated that the percentage by weight of the coal tar pitch shall not exceed the percentage by weight of the epoxy resin. The coating shall be satisfactory to produce a hard, glossy surface free from runs, sags, cracks and blisters and shall meet the following formulation:

Volatile	Maximum 20% by weight
Coal Tar	Maximum 30% by weight
Epoxy Resin	Minimum 30% by weight
Film Forming Solids	Minimum 80% by weight

5-5 Sanitary Sewer Service Materials

A. Polyvinyl Chloride Pipe – PVC

Sanitary sewer service lines may be constructed of polyvinyl chloride pipe in compliance with Section 5-4A of these specifications.

B. Ductile Iron Pipe

Sanitary sewer service lines may be constructed of ductile iron pipe in compliance with Section 5-4B of these specifications with the lining to be epoxy. Standard interior linings are acceptable.

C. Bedding Material

Pipe bedding for all types of sanitary sewer service lines shall comply with Section 5-4G of these specifications.

D. Sanitary Sewer Service Fittings

1. Pipe fittings for PVC service lines shall be PVC, bell and spigot joint in compliance with Section 5-4B of these specifications. Solvent weld fittings may not be used.

2. Pipe fittings for DIP service lines shall be cast-iron, bell and spigot joint in compliance with Section 5-4C of these specifications.

E. Tapping Saddles

Sanitary sewer service tapping saddles shall be constructed of PVC in accordance with Section 5-4B of these specifications. Tapping saddles shall consist of: a rubber gasket attached to the flange of the saddle which will seal against the outside wall of the main, a bell and spigot gasket in the bell of the service outlet, and two stainless steel straps which secure the saddle to the main line. Solvent welded saddles shall not be acceptable.

F. Pipe Adaptors/Couplings

Pipe adaptors, couplings, or bushings shall be used to connect pipes of different materials or dimensions. Adaptors, couplings and bushings shall provide a secure, leak-proof joint which shall meet or exceed the leak testing requirements of the pipe. Adaptors, couplings, and bushings shall be secured to the pipe by means of a mechanical connection such as stainless steel clamps or a positive bell and spigot gasketed joint. The nominal diameter of the adapter, coupling, or bushing shall match the nominal diameter of the pipes being connected. Field modifications, of these items shall not be permitted. Pipe adaptors, couplings, or bushings shall be manufactured by Fernco, Inc. or an approved equal. Concrete collars with "diapers" shall not be permitted.

G. Lamphole/Cleanout Rings and Covers

Lamphole/cleanout rings and covers shall be cast iron, heavy duty with an ability to withstand traffic loading. Rings and covers shall be manufactured by Neenah, Tyler, or approved equal. Lamphole covers for drop manholes and cleanouts shall have the lid secured in place with brass bolts and shall be Neenah R-1977 or approved equal.

5-6 Sanitary Sewer Main Installation

A. Excavation and Trenching

1. Topsoil

Contractor shall remove and stockpile sufficient topsoil from the surface to a minimum depth of 4 inches along all areas of the pipeline route disturbed by his operations which are not covered by paving, concrete, or gravel. Topsoil shall be free from trash and debris, and from surface vegetation more than 6 inches in height. After all other work has been completed in each area, topsoil shall be placed to a depth of at least 4 inches and graded to the satisfaction of the Town Engineering Inspector.

2. Limits of Excavation

Excavations shall provide adequate working space and clearances for the work to be performed therein and for installation and removal of concrete forms. In no case shall excavation faces be undercut for extended footings. All excavations shall abide by current OSHA safety rules.

Except with the written approval of the Town Engineering Inspector, the maximum length of open trench shall be 300 feet, one block, or the distance necessary to allow for full inspection of the entire length of pipe installed in a single day, whichever is less. The distance is the collective length at any location, including open excavation, pipe laying, and appurtenances and backfill, which have not been brought to finished grade. No trench shall be left open at any time that construction operations are not ongoing.

3. Alignment, Grade, and Cover

The alignment and grade or elevation of each pipeline shall be fixed and determined from offset stakes. Vertical and horizontal alignment of pipes, and the maximum joint deflection used in connection therewith, shall be in conformity with the requirements of Section 4-2C of these specifications.

4. Trench Width

Trenches shall be excavated so that a minimum clearance of six (6) inches shall be maintained on each side of the pipe for proper placement and densification of the bedding or backfill material. For 12-inch or larger diameter pipes, the minimum sidewall clearance is eight (8) inches. The maximum trench width, measured at the top of the pipe, shall be the outside diameter plus twenty-four (24) inches. Any trench exceeding this width may require a higher-class pipe as approved by the Town Engineering Inspector.

5. Mechanical Excavation

The use of mechanical equipment will not be permitted in locations where its operation would cause damage to trees, buildings, culverts, or other existing property, utilities, or structures above or below ground. In all such locations, hand excavating methods shall be used.

Mechanical equipment used for trench excavation shall be of a type, design, and construction, and shall be so operated, that the rough trench excavation bottom elevation can be controlled, that uniform trench widths and vertical sidewalls are obtained at least from an elevation one foot above the top of the installed pipe to the bottom of the trench, and that trench alignment is such that pipe when accurately laid to specified alignment will be centered in the trench with adequate clearance between the pipe and sidewalls of the trench. Undercutting the trench sidewall to obtain clearance will not be permitted.

Cutting trench banks on slopes to reduce earth load to prevent sliding and caving shall be used only in areas where the increased trench width will not interfere with surface features or encroach on right-of-way limits. Slopes shall not extend lower than one foot above the top of the pipe. Where, for any reason, the width of the lower portion of the trench, as excavated at any point, exceeds the maximum permitted in the table below, either pipe of adequate strength, special pipe embedment, or arch concrete encasement, as required by loading conditions and with the concurrence of the Town Engineering Inspector, shall be furnished and installed by, and at the expense of, the Contractor.

Nominal Pipe Size (in.)	Minimum Sidewall Clearance (in.)	Maximum Trench Width (in.)
Less than or equal to 12	6	Pipe OD + 24
Between 12 and 24	8	Pipe OD + 24

Any requests for deviation of these widths shall be accompanied by a certification from the Developer's/Contractor's engineer stating that the deviation will not be detrimental to the pipe.

6. Tunneling and Boring

Tunneling or boring may be permitted, with approval by the Director of Development Services, when tunneling or boring is to occur within public property or right-of-way. If the earth in the tunnel sloughs off, the roof of the tunnel shall be broken down, and the trench excavated as an open trench. All tunneling methods of construction shall be submitted to the Director of Development Services for approval.

Pipelines shall be constructed in tunnels of the type designated on the drawings, in conformity with the requirements which follow. Tunnels shall be made of tunnel liner plate, corrugated steel pipe, or smooth steel pipe as specified below. Before starting work on any tunnel, detailed drawings, specifications, and other data covering the liner to be used shall be submitted to the Director of Development Services for review and approval.

The clear inside diameter of tunnel liners shall be within 4 inches of the nominal diameter indicated on the drawings.

a. Tunnel Liner Plate - Steel tunnel liner plates shall be corrugated sections as manufactured by Armco or approved equal. Liner plates shall have sectional properties conforming to Section 16.5 of AASHTO "Standard Specifications for Highway Bridges" or Section 4.12.5, Table 1 of AREA "Manual for Railway Engineering". The liner plates shall be designed so that erection and assembly can be accomplished entirely from inside the tunnel. Liner plates shall be capable of withstanding the ring thrust load and transmitting this from plate to plate. Liner plates shall have a minimum thickness of 0.1046 inches.

   All liner plates shall be hot-dip galvanized in conformity with ASTM A123 for 2.50-ounce coating after the plates are formed or shaped. Bolts and nuts shall be hot-dip galvanized in conformity with ASTM A153.

   Care shall be taken during installation to maintain alignment, grade, and the circular shape of the tunnel. Longitudinal joints in adjacent rings shall be staggered and not in alignment more often than every second ring. The entire operation of tunneling and setting of liners shall be acceptable to the Town Engineering Inspector and the agency having jurisdiction. Adequate means shall be provided to keep the work free from water.

   Sufficient sections shall be provided with 1-1/2 inch or larger grouting holes, located near the centers, so that when the plates are installed there will be one line of holes on each side of the tunnel and one at the crown; the lower line of holes on each side shall be not more than 18 inches above the invert. The holes in each line shall be not more than 9 feet apart and shall be staggered.

   All space between the lining and the earth shall be filled with grout forced in under pressure. The grout shall be mixed in the volumetric proportions of two parts Portland cement, one part fly

ash, and not to exceed six parts of sand. Enough water shall be used to produce, when well mixed, a grout having the consistency of thick cream. As the pumping through any hole is stopped, it shall be plugged to prevent backflow of grout.

Grouting shall be performed in a sequence which will preclude deflections exceeding 5 percent of the tunnel diameter.

b. Corrugated Steel Pipe - Corrugated steel pipe shall be manufactured in accordance with all applicable requirements of the specifications of the American Railway Engineering Association.

Pipe shall be fabricated from galvanized steel sheets not less than 12 USS gauge in thickness, measured before galvanizing.

Each conduit shall be installed by jacking into place. Earth displaced by the conduit shall be removed through the interior of the conduit by hand, by auger, or by other acceptable means. Sections of the corrugated steel pipe shall be coupled with bolted connections to form a continuous conduit capable of resisting all stresses, including jacking stresses. Each corrugated steel pipe conduit in its final position shall be straight and true in alignment and grade, as required by the drawings. There shall be no space between the earth and the outside of the conduit.

c. Smooth Steel Pipe - Smooth wall casing pipe shall be of welded steel construction and shall be new material with a minimum yield strength of 35,000 psi. The pipe shall have a wall thickness of at least 0.250 inch. The casing pipe shall be cleaned and coated both inside and outside with two coats of coal tar paint, Koppers "Bitumastic Super Service Black", Mobil "High-Build Bituminous Coating 35-J-10", or Tnemec "46-449 Heavy Duty Black".

The conduit shall be installed by jacking into place. Earth displaced by the conduit shall be removed through the interior of the conduit by hand, by auger, or by other acceptable means. Sections of the casing pipe shall be welded together to form a continuous conduit capable of resisting all stresses, including jacking stresses. The casing pipe conduit in its final position shall be straight and true in alignment and grade, as required by the drawings. There shall be no space between the earth and the outside of the casing.

d. Wood Skids - Wood skids shall be provided to support the pipe barrel within the tunnel. The wood shall be pressure treated with creosote, pentachlorophenol, or salt-type preservative in accordance with AWPA C2. Cut surfaces shall be given two heavy brush coats of the same preservative.

   The wood skids shall be securely strapped to the carrier pipe with steel strapping material at least ¾-inch wide.

e. End Closure - At the option of the Contractor, both ends of each casing conduit shall be closed with 2-inch thick wood planks or with common brick and mortar. Planks shall be pressure treated with creosote, pentachlorophenol, or salt-type preservative in accordance with AWPA C2. Cut surfaces shall be given two heavy coats of the same preservative. Nails and fasteners shall be galvanized or aluminum coated.

f. Paved Invert - The bottom portion of each casing conduit constructed using either tunnel liner plates or corrugated steel pipe shall be provided with a paved concrete invert.

g. Interruption of Traffic – No interruption of traffic will be permitted at any location where tunnels are required.

7. Asphalt/Concrete Cutting

Cuts in concrete and asphalt pavement and concrete base pavements shall be no larger than necessary to provide adequate working space for proper installation of pipe and appurtenances. Cutting shall be started with a concrete saw in a manner which will provide a clean groove at least 1-½ inches deep along each side of the trench and along the perimeter of cuts for structures.

Concrete and asphalt pavement and concrete base pavement over trenches excavated for pipelines shall be removed so that a shoulder not less than 6 inches in width at any point is left between the cut edge of the pavement and the top edge of the trench. Trench width at the bottom shall not be greater than at the top and no undercutting will be permitted. Pavement cuts shall be made to, and between, straight or accurately marked curved lines which, unless otherwise required, shall be parallel to the centerline of the trench.

Pavement removed for connections to existing lines or structures shall not be of greater extent than necessary for the installation as determined by the Town Engineering Inspector.

Where the trench parallels the length of concrete walks and the trench location is all or partially under the walk, the entire walk shall be removed and replaced. Where the trench crosses drives, walks, curbs, or other surface construction, the surface construction shall be removed and replaced between existing joints or between saw cuts as specified for pavement.

8. Blasting

Under no circumstances shall blasting be permitted in order to construct any sanitary sewer facility.

9. Drainage Maintenance

Trenches across roadways, driveways, walks, or other trafficways adjacent to drainage ditches or watercourses shall not be backfilled prior to completion of backfilling the trench on the upstream side of the trafficway, to prevent impounding water after the pipe has been laid. Bridges and other temporary structures required to maintain traffic across such unfilled trenches shall be constructed and maintained by the Contractor. Backfilling shall be done so that water will not accumulate in unfilled or partially filled trenches. All material deposited in roadway ditches or other watercourses crossed by the line of trench shall be removed immediately after backfilling is completed, and the original section, grades, and contours of ditches or watercourses shall be restored. Surface drainage shall not be obstructed longer than necessary. In the event of heavy rains or precipitation, the Contractor will be required to temporarily open ditches or water courses to facilitate drainage.

10. Stabilization

Subgrades for concrete structures and trench bottoms shall be firm, dense, and thoroughly compacted and consolidated; free from mud and muck; and sufficiently stable to remain firm and intact under the feet of the workmen.

Subgrades for concrete structures or trench bottoms which are otherwise solid but which become mucky on top due to construction operations shall be reinforced with one or more layers of crushed rock or gravel. The stabilizing material shall be spread and compacted to a depth of not more than 4 inches; if the required depth exceeds 4 inches, the material shall be furnished and installed as specified for granular fills. Not more than ½-inch depth of mud or muck shall be allowed to remain on stabilized trench bottoms when the pipe bedding material is placed thereon. The finished elevation of stabilized subgrades for concrete structures shall not be above subgrade elevations indicated on the drawings.

If in the opinion of the Town Engineering Inspector, the subgrade is not solid enough to properly support the pipe or concrete structure, Contractor will stabilize the subgrade using granular material per Section 5-4G and the Detail 3.

All stabilization work shall be performed by and at the expense of the Contractor.

11. Sheeting and Shoring

Except where banks are cut back on a stable slope, excavation for structures and trenches shall be sheeted, braced, and shored as necessary to prevent caving or sliding, to provide protection for workmen and the work in accordance with current OSHA safety rules, and to provide protection for existing structures and facilities. Sheeting, bracing, and shoring shall be designed and built to withstand all loads that might be caused by earth movement or pressure and shall be rigid, maintaining shape and position under all circumstances.

Trench sheeting shall not be pulled before backfilling unless the pipe strength is sufficient, in the opinion of the Town Engineering Inspector, to carry trench loads based on trench width to the back of sheeting, nor shall sheeting be pulled after backfilling. When ordered by the Town Engineering Inspector, sheeting shall be left permanently in the trench.

Where trench sheeting is left in place, such sheeting shall not be braced against the pipe, but shall be supported in a manner which will preclude concentrated loads or horizontal thrusts on the pipe. Cross braces installed above the pipe to support sheeting may be removed after pipe embedment has been completed.

12. Protection of Trench Backfill in Drainage Courses

Where trenches are constructed in ditches or other watercourses, backfill shall be protected from surface erosion. Where the grade of the ditch exceeds one percent, check dams shall be installed. Unless otherwise directed by the Town Engineering Inspector, check dams shall be concrete. Check dams shall extend not less than 2 feet below the original ditch or water course bottom for the full bottom width and at least 18 inches into the side slopes, and shall be at least 12 inches thick.

13. Disposal of Excess Excavated Materials

Except as otherwise permitted, all excess excavated materials shall be disposed of away from the site of the work.

Broken concrete and other debris resulting from pavement or sidewalk removal, excavated rock in excess of the amount permitted to be installed in trench backfill, debris encountered in excavation work, and other similar waste materials shall be disposed of away from the site of the work.

Excess earth from excavations located in unimproved property shall be distributed directly over the pipe trench and within the pipeline right-of-way to a maximum depth of 6 inches above the original ground surface elevation at and across the trench and sloping uniformly each way. Material thus wasted shall be carefully finished with a drag, blade machine, or other suitable tool to a smooth, uniform surface without obstructing drainage at any point.

Wasting of excess excavated material in the above manner will not be permitted where the line of trench crosses or is within a railroad, public road, or highway right-of-way. The disposal of waste and excess excavated materials, including hauling, handling, grading, and surfacing shall be a subsidiary obligation of the Contractor and no separate payment will be made thereof.

14. Resodding

All established lawn areas cut by the line of trench or damaged during the work shall be resodded, after completion of construction to the complete satisfaction of the property owner and the Town Engineering Inspector. All sod used shall be the same type as removed or damaged, shall be best quality and, when placed, shall be live fresh growing grass with at least 1-1/2 inches of soil adhering to the roots.

All sod shall be procured from areas where soil is fertile and contains a high percentage of loamy topsoil and from areas that have been grazed or mowed sufficiently to form a dense turf.

Sod shall be transplanted within 24 hours from the time it is harvested unless stacked at its destination in a suitable manner. All sod in stacks shall be kept moist and protected from exposure to the sun and from freezing. In no event shall more than one week elapse between cutting and planting.

Before placing sod, all shaping and dressing of the areas shall have been completed to the satisfaction of the Town Engineering Inspector. After shaping and dressing, commercial fertilizer of a type acceptable to the Town Engineering Inspector shall be applied uniformly in the manner and amounts recommended by the manufacturer and harrowed lightly. Sodding shall follow immediately. For slopes 3:1 or steeper, staking of sod shall be required.

All sodding shall be done during the period from April 1 to November 15, unless written permission is given by the Town Engineering Inspector to extend the planting season.

15. Reseeding

Where required by the drawings or as directed by the Town Engineering Inspector, lands disturbed by the Contractor's operations shall be reseeded. Personnel who are experienced and qualified in seeding native grasses shall perform seeding work.

Mulch shall be applied to all disturbed areas following seeding. Mulch shall lightly disked or covered with a biodegradable net.

a. Seed

Seed shall be certified seed labeled in accordance with the U.S. Department of Agriculture Rules and Regulations and shall comply with the State Seed Laws of the State of Colorado. Seed mixture and application rate shall be acceptable to the Town Engineering Inspector.

b. Construction

Seeding shall be completed between April 1 through November 15, and no seeding shall be done during periods of high winds, excessive moisture, snow cover, frozen ground, or when ground cannot be worked, as determined by the Town Engineering Inspector. Seeding performed during the summer months shall be watered sufficiently by the Owner/Developer or Contractor as to establish a substantial stand of grass.

Seed shall be applied at the rate of 50 pounds of live seed per acre. Seed shall be applied with a drill or cultipacker type of seeder such that it is spread over the area and buried an average depth of ¼ to ½ inch. Certified weed free straw or native hay mulch shall be applied after seeding at a rate of 2 tons per acre and shall be crimped in mechanically. Hydro-seeding is acceptable as an alternative, provided it meets the requirements of the Town Engineering Inspector.

16. Settlement

The Contractor shall be responsible for all settlement of backfill, fills, and embankments that may occur during the two-year warranty period.

The Contractor shall make, or cause to be made, all repairs or replacements made necessary by settlement within 30 days after notice from the Town Engineering Inspector.

17. Off-Road Construction

Because of scenic impacts, all off-road construction shall be done with extreme care to minimize erosion and damage to existing vegetation.

Restoration of vegetation shall be done after backfilling and compaction are complete and the surface is brought to final grade, and shall match the planting in place prior to being disturbed.

18. Maintenance of Traffic

Contractor shall conduct his work to interfere as little as possible with public travel, whether vehicular or pedestrian. Whenever it is necessary to cross, obstruct, or close roads, driveways, and walks, whether public or private, Contractor shall provide and maintain suitable and safe bridges, detours, or other temporary means to accommodate public and private travel, and shall give reasonable notice to owners of private drives before interfering with them. Such maintenance of traffic will not be required when Contractor has obtained permission from the owner and tenant of private property, or from the authority having jurisdiction over public property involved, to obstruct traffic at the designated point. Contractor shall conform to the minimum signage and flagging requirements of the U.S. Department of Transportation's Manual on Uniform Traffic Control Devices, latest edition.

In making open cut street crossings, Contractor shall not block more than one-half of the streets at a time. Whenever possible, Contractor shall widen the shoulder on the opposite side to facilitate traffic flow. Temporary surfacing shall be provided as necessary on shoulders.

a. Road Closings - The Contractor shall not close any street or portion of a street without receiving approval from the Town of Monument 48 hours prior to such closure. It is the Contractor's responsibility to notify the Town Police Department and the applicable Fire District 24 hours prior to closing any street for which authorization has been granted. The Contractor shall also notify the Police and

Fire Departments immediately after the reopening of any street, alley, or fire lane.

b. Detours - Where required by the authority having jurisdiction that traffic be maintained over any construction work in a public street, road, or highway, and the traffic cannot be maintained on the alignment of the original roadbed or pavement, Contractor shall, at his own expense, construct and maintain a detour around the construction work. Traffic shall be maintained at all times on all State highways. Each detour shall include a bridge across the pipe trench and all necessary barricades, guardrails, approaches, lights, signals, signs, and other devices and precautions necessary for protection of the work and safety of the public.

c. Permits - All permits for work within the State, County, or railroad rights-of-way shall be obtained by the Developer prior to the start of construction. All work performed within the limits of the rights-of-way shall be in conformance with the requirements, and be under the control of, the authority having jurisdiction.

19. Interruption of Service

The Contractor shall coordinate interruptions of utility services with the Town and/or utility owner as appropriate. Connections to the existing system requiring the interruption of service shall be made during the time designated by the Town or utility owner.

Notices will conform to any applicable local ordinances and, whether delivered orally or in writing, will include appropriate information concerning the interruption and instructions on how to limit inconvenience.

Utilities and other concerned agencies shall be contacted at least 24 hours prior to cutting or closing streets or other traffic areas, or excavating near underground utilities or overhead lines.

Permission shall be obtained to cut and replace existing service lines to facilitate trenching. Affected users shall be notified a minimum of two hours in advance of, and restore service within four hours after, any interruption. All lines shall be repaired at no cost to the Town unless otherwise provided for.

20. Barricades and Lights

All streets, roads, highways, and other public thoroughfares which are closed to traffic shall be protected by effective barricades on which shall be placed acceptable warning signs. Barricades shall be located at the

nearest intersecting public highway or street on each side of the blocked section. Barricading shall meet all appropriate MUTCD Standards.

All open trenches and other excavations shall have suitable barricades, signs, and lights to provide adequate protection to the public. Obstructions such as material piles and equipment shall be provided with similar warning signs and lights.

All barricades and obstructions shall be illuminated with warning lights from sunset to sunrise. Material storage and conduct of the work on or alongside public streets and highways shall cause the minimum obstruction and inconvenience to the traveling public.

All barricades, signs, lights, and other protective devices shall be installed and maintained in conformance with applicable statutory requirements, and where within railroad and highway rights-of-way, as required by the authority having jurisdiction. All barricades and lights shall conform to the U.S. Department of Transportation's Manual on Uniform Traffic Control Devices, latest edition.

21. Fences

Contractor shall maintain all existing fences affected by the work until completion of the work. Fences which interfere with construction operations shall not be relocated or dismantled until written permission is obtained from the owner of the fence, and the period the fence may be left relocated or dismantled has been agreed upon. Where fences must be maintained across an easement, adequate gates shall be installed. Gates shall be kept closed and locked at all times when not in use.

Upon completion of the work across any tract of land, Contractor shall restore all fences to their original or better condition and in their original location. Upon completion of the work, the Contractor must obtain a release from the owner of the fence verifying that the fence has been restored to the owner's satisfaction. A copy of this release shall be delivered to the Director of Development Services.

22. Protection of Public and Private Property

Contractor shall protect shore, brace, support, and maintain all underground pipes, conduits, drains, and other underground construction uncovered or otherwise affected by his construction operations. All pavement, surfacings, driveways, curbs, walks, buildings, utility poles, guy wires, fences, and other surface structures affected by construction operations, together with all sod and shrubs in yards or parking areas,

shall be restored to their original condition, whether within or outside the easement. All replacements shall be made with new materials.

No trees shall be removed outside of the permanent easement, except where authorized by the Director of Development Services. Whenever practicable, Contractor shall tunnel beneath trees in yards when on or near the trench line. Hand excavation shall be employed as necessary to prevent injury to trees. Trees left standing shall be adequately protected against damage by construction operations.

Contractor shall be responsible for all damage to streets, roads, highways, shoulders, ditches, embankments, culverts, bridges, and other public or private property, regardless of location or character, which may be caused by transporting equipment, materials, or men to or from the work or any part or site thereof, whether by him or his subcontractors. Contractor shall make satisfactory and acceptable arrangements with the owner of, or the agency or authority having jurisdiction over, the damaged property concerning its repair or replacement or payment of costs incurred in connection with the damage.

All fire hydrants and water control valves shall be kept free from obstruction and available for use at all times.

23. Dust Control

Contractor shall obtain a Dust Control permit from the Town, which outlines measures to be taken to limit unnecessary dust and airborne particulates. Surfaces subject to dust emission shall be kept moist with water or by application of a chemical dust suppressant. Dusty materials in piles or in transit shall be covered when practicable to prevent blowing. All dust control chemicals must meet current EPA requirements.

24. Temporary Drainage Provisions

Contractor shall provide for the drainage of storm water and such water as may be applied or discharged on the site in performance of the work. Drainage facilities shall be adequate to prevent damage to the work, the site, and adjacent property and rights-of-way.

Existing drainage channels and conduits shall be cleaned, enlarged, or supplemented as necessary to carry all increased runoff attributable to Contractor's operations. Dikes shall be constructed as necessary to divert increased runoff from entering adjacent property (except in natural channels), to protect facilities and the work, and to direct water to drainage channels or conduits. Detention ponds and other acceptable BMP’s shall

be provided as necessary to prevent downstream flooding or sedimentation.

25. Erosion Control

Contractor shall prevent erosion of soil on the site and adjacent property resulting from construction activities. Effective measures shall be initiated prior to the commencement of clearing, grading, excavation, or other operations that will disturb the natural protection. All erosion control measures must be implemented per Chapters 8 and 16 of the Monument Municipal Code.

Work shall be scheduled to expose areas subject to erosion for the shortest possible time and natural vegetation preserved to the greatest extent practicable. Temporary storage and construction buildings shall be located, and construction traffic routed, to minimize erosion. Temporary, fast-growing vegetation or other suitable ground cover shall be provided as necessary to control runoff.

26. Pollution Control

Contractor shall prevent the pollution of drains and watercourses by sanitary wastes, sediment, debris, and other substances resulting from construction activities. No sanitary wastes will be permitted to enter any drain or watercourse other than sanitary sewers. No sediment, debris, or other substance will be permitted to enter sanitary sewers, and reasonable measures will be taken to prevent such materials from entering any drain or watercourse. If any such materials enter storm sewers or watercourses, the Monument Police, the applicable Fire District, and the Monument Public Works Department shall be notified immediately.

27. Storage and Stockpiling

All storage and stockpiling plans must be approved by the Director of Development Services prior to placing material on-site. The Director of Development Services may require the removal of all materials within 48 hours notice if, in his/her judgment, the storage or stockpiling has become a public nuisance.

28. Grading and Stockpiling

Stockpiling and grading shall be controlled to prevent water from flowing into excavations. Obstruction of surface drainage shall be avoided and means shall be provided whereby storm water can flow uninterrupted into existing gutters, other surface drains, or temporary drains. Excavated

material shall not be placed or stockpiled closer than two feet from the top edge of the trench.

29. Dewatering

Ample devices shall be provided at all times to promptly remove and dispose of all water from any source entering the trench or structure excavation. Dewatering may be accomplished by the use of well points, sump pumps, rock, or gravel drains placed below subgrade foundations, or subsurface pipe drains. Water shall be disposed of in a suitable manner without damaging adjacent property or endangering public health or safety. The water shall not be drained into work completed or under construction. The dewatering operation shall continue until such time that, in the opinion of the Director of Development Services, it is safe to allow the water table to rise. Pipe trenches shall contain sufficient backfill to prevent pipe flotation.

30. Structures

Except where exterior surfaces are specified to be dampproofed, monolithic concrete manholes and other concrete structures, or parts thereof, which do not have footings that extend beyond the outside face of exterior walls, may be placed directly against excavation faces without the use of outer forms, provided that such faces are stable and also provided that a layer of polyethylene film is placed between the earth and the concrete.

31. Weather

Backfilling and construction of fills and embankments during freezing weather shall not be done except by permission of the Town Engineering Inspector. No embedment, backfill, fill, or embankment materials shall be installed on frozen surfaces, nor shall frozen materials, snow, or ice be placed in any embedment, backfill, fill, or embankment.

All construction operations, including excavation and trenching, are restricted to certain months of each year. A written request to deviate from this requirement shall be made to the Director of Development Services. Any pipelines constructed during this period, without written consent of the Director of Development Services, will not be considered for inclusion in the Town or Triview Metropolitan District Sanitary Sewer System.

B. Pipe Foundations and Bedding

1. Pipe Foundation

The trench bottom shall be excavated 6 inches below the invert of the pipe unless otherwise designated on the plans. It will be permissible to slightly disturb the finished subgrade surface by withdrawal of pipe slings or other lifting tackle.

Where rock is encountered during excavation, it shall be removed below the pipe and the trench backfilled with bedding material as detailed in Section 5-4G, to provide a compacted foundation cushion with minimum thickness of 12 inches below the pipe bell. Any ledge rock, boulders and large stones encountered shall be removed to provide a clearance of at least 12 inches below and on the side of the pipe and fittings.

If the bottom of the excavation is soft or unstable and, in the opinion of the Town Engineering Inspector, cannot satisfactorily support the pipe or structure, additional excavation on the bottom and sides of the trench shall be required. The excavation shall continue until, in the opinion of the Town Engineering Inspector, the foundation can be backfilled with rock conforming to CDOT Size #4, as detailed in Section 5-4G, to provide an adequate foundation for the pipe or structure. Overexcavated subgrades shall be restored to proper elevation with compacted stabilization material. Once the pipe has been laid, the Town Engineering Inspector may require the same rock bedding in the pipe zone, if, in the opinion of the Geotechnical Engineer, migration of the finer Class A bedding is likely to occur.

2. Pipe Bedding

After each pipe has been graded, aligned, and placed in final position on the bedding material and shoved home, sufficient pipe embedment material shall be deposited and compacted under and around each side of the pipe and back of the bell or end thereof to hold the pipe in proper position and alignment during subsequent pipe jointing and embedment operations. Granular bedding material shall be compacted by vibrating or slicing with a shovel or bent tee-bar.

Embedment material shall be deposited and compacted uniformly and simultaneously on each side of the pipe to prevent lateral displacement. The first lift of material shall not exceed the depth of the pipe's springline. Additional lifts of embedment material shall not exceed 8 inches in uncompacted thickness.

The pipe shall be bedded as shown in Detail 3. Each joint shall be recessed in bedding material as specified in Section 5-4G in such a manner as to relieve the bell or coupling of the pipe of all load and to insure continuous bearing along the pipe barrel upon the pipe foundation.

The pipe bedding, conforming to Section 5-4G of these specifications, shall be placed from the pipe foundation to a point 12 inches above the top of pipe and compacted to the requirements set forth in Section 5-4C.1. Backfilling shall be carried on simultaneously on each side of the pipe to assure proper protection and alignment of the pipe. See Section 5-4G "Bedding Materials".

3. Groundwater Barrier

Continuity of embedment material shall be interrupted by low permeability groundwater barriers to impede passage of water through the embedment. Barriers for sewer lines shall be compacted soil the full depth of granular material, the full width of the trench, keyed into undisturbed trench wall a minimum 1 foot, and spaced not more than 400 feet apart. A groundwater barrier shall be placed 20 feet downstream of the edge of all drainage ways, streams, and watercourses.

C. Trench Backfilling and Compaction

All trenches shall be backfilled after pipe, fittings, and appurtenances have been installed, inspected, and approved by the Town Engineering Inspector. Bedding and "pipe zone" backfill shall be installed in accordance with these specifications. The pipe zone shall be defined as the area from the pipe invert extending to the top of the pipe.

Backfill materials shall be placed in uniform layers not exceeding 8 inches in uncompacted thickness unless otherwise approved by the Town Engineering Inspector and the Geotechnical Engineer. Each layer of material shall have optimum moisture as described in these specifications. The material in each layer shall be wetted or dried as required and thoroughly mixed to ensure uniform moisture content and adequate compaction. Contractor must demonstrate to the satisfaction of the Town Engineering Inspector that the specified compacted density will be obtained. The method of compaction and the equipment used shall be appropriate for the material to be compacted and shall not transmit damaging shocks to the pipe. Heavy compaction equipment shall not be used closer than three feet to walls at the top of any structure nor closer than three feet to the top of the pipe.

1. Procedure Within the Pipe Zone

The bedding material within the pipe zone shall be compacted to a relative density of 70% determined by ASTM D2049. When backfilling within the pipe zone, special care shall be exercised to prevent settling or lateral movement of the pipe. To safeguard against movement of pipelines or structures, backfill shall be placed in layers not exceeding eight inches in thickness. Each layer shall be thoroughly compacted with hand-operated, power driven tampers or bent Tee-bars.

2. Compaction Above the Pipe Zone

In the areas not within roadways, the backfill material from the pipe zone to the proposed finished grade shall be compacted to a Standard Proctor density of 90% as determined by ASTM D698 or 85% of Modified Proctor density per ASTM D1557, at near optimum moisture content. In existing or proposed roadways all backfill material from the pipe zone to the road subgrade shall be compacted in accordance with the requirements specified in Section 5.4C.3.

3. Compaction Tests

The Geotechnical Engineer will take samples and perform moisture content, compaction, and density tests during placement of backfill materials to check compliance with these specifications. The Contractor shall remove surface material at locations designated by the Geotechnical Engineer and provide such assistance as necessary for sampling and testing. The Geotechnical Engineer may direct the Contractor to construct inspection trenches in compacted or consolidated backfill to determine that the Contractor has complied with these specifications.

Tests will be made by the Geotechnical Engineer in accordance with the following:

Test	Standard Procedure
Moisture content	ASTM D3017
Density in-place	ASTM D1556 or ASTM D2922
Moisture-density relationships	ASTM D1557 or ASTM D698

Compaction shall be to the following minimum densities per ASTM D1557 unless otherwise indicated:

a. Compaction of pipe bedding: 90% maximum density.

b. Compaction of groundwater barrier material: 95% maximum density.

c. Compaction of backfill:

   1) Cohesive Soils: 90% maximum Modified Proctor dry density at +/-2% of optimum moisture content, or 95% maximum Standard Proctor dry density at +/-2% of optimum moisture content.

   2) Cohesionless Soils: 92% maximum Modified Proctor dry density at +/-2% of optimum moisture content, or 97% maximum Standard Proctor dry density at +/-2% of optimum moisture content.

   3) Expansive Soils: 88% maximum Modified Proctor dry density at +3% or greater above optimum moisture content, or 93% maximum Standard Proctor dry density at +1% or greater above optimum moisture content. For highly expansive soils (swelling potential > 2.00% under 200 psf surcharge pressure), paving will not be permitted without a subgrade treatment approved by the Engineer-of-Record and the Town.

d. The following tests will be required at a minimum:

   1) Two initial gradation tests for each type of embedment, fill, or backfill material and one additional gradation test for each additional 500 tons of each material.

   2) Two moisture-density (Proctor) tests in accordance with ASTM D698 or ASTM D1557 or two relative density tests in accordance with ASTM D4253 and ASTM D4254 for each type of embedment, fill, or backfill material proposed, except for granular embedment material.

   3) Pipeline in-place density tests at average intervals of 400 feet along the trench for up to five feet backfill, two tests approximately every 400 feet for five to eight feet of backfill, and one additional test every 400 feet for every 3 feet of backfill greater than eight feet, or as directed by the Town Engineering Inspector. Test locations will be at the discretion of the Town Engineering Inspector.

4) Precast and cast-in place structures shall have one in-place density test performed for up to five feet of backfill, two tests for five to eight feet of backfills and three tests for backfill greater than eight feet, or at the discretion of the Town Engineering Inspector.

5) For area fills and embankments, an in-place field density test for each 5,000 cubic yards of material placed or as directed by the Town Engineering Inspector.

Copies of test results shall be provided to the Town Engineering Inspector. In all cases where the tests indicate compaction less than that required in these specifications, additional compaction and tests will be required until these specifications are met. No base course or pavement installation shall be permitted to occur until the Town Engineering Inspector has reviewed and approved compaction test results. Final acceptance of the lines by the Town will be contingent upon satisfactory compaction results.

e. Compaction Test Failure

If the required state of compaction is not obtained, it shall be the responsibility of the Contractor to recompact the material to the required state of compaction. In cases where there is a failure to achieve the required state of compaction, the Town may require that the backfill be removed and recompacted, or replaced.

The pipeline and/or structures shall be required to be retested after recompaction, if the testing has been performed prior to recompaction.

Testing shall be performed between manholes on both sides of area being recompacted.

f. Settlement

The Contractor shall be responsible for all settlement of backfill, fills, and embankments which may occur within the two-year warranty period.

The Contractor shall make, or cause to be made, all repairs or replacements made necessary by settlement within 30 days after notice from the Town Engineering Inspector.

Backfill materials shall be placed in uniform layers not exceeding 8 inches in uncompacted thickness unless otherwise approved by the Town Engineering Inspector and the Geotechnical Engineer. Each

layer of material shall have optimum moisture as described in these specifications. The material in each layer shall be wetted or dried as required and thoroughly mixed to ensure uniform moisture content and adequate compaction. Contractor must demonstrate to the satisfaction of the Town Engineering Inspector that the specified compacted density will be obtained. The method of compaction and the equipment used shall be appropriate for the material to be compacted and shall not transmit damaging shocks to the pipe. Heavy compaction equipment shall not be used closer than three feet to walls at the top of any structure nor closer than three feet to the top of the pipe.

4. Surface Restoration

All areas disturbed by the construction operations after completion of backfilling and compacting shall be fine graded. Areas which are to receive pavement, surfacing, topsoil, or landscaping shall be graded as required to allow installation of the specific surface treatment. All other areas shall be graded to match the existing ground line.

Topsoil shall be replaced with suitable soil to the depth of stripping over all areas disturbed by the construction that do not receive other surface treatment. Topsoil shall not be compacted during stripping, stockpiling, or placing.

The Contractor shall restore all pavement, sidewalks, curbing, gutters, or other surface structures removed or disturbed as part of the work to a condition meeting the standards of the governing agency, and shall furnish all incidental labor and materials. No permanent pavement shall be restored until, in the opinion of the Town or agency having control, the condition of backfill is such as to properly support the pavement.

If any pavement, street, landscaping, shrubbery, sod, native grass areas, rock, fences, poles or other property and surface structures have been damaged, removed, or disturbed by the Contractor, whether deliberately or through failure to carry out the requirements of the controlling agency or the specific directions of the Town, or through failure to employ usual and reasonable safeguards, such property and surface structures shall be replaced or repaired, to the satisfaction of the property owner, at the expense of the Contractor.

D. Installation of Sanitary Sewer Main

1. General

Pipe shall be laid without break, upstream from structure to structure, with the bell ends of pipe upstream. Pipe shall be laid to the line and grade

given so as to form a close concentric joint with the adjoining pipe and prevent sudden offsets of the flow line. The interior of the sewer pipe shall be cleaned of all dirt and superfluous materials as the work progresses.

At all times when pipe laying is not in progress, the open end of the pipe shall be closed with a tight fitting cap or plug to prevent the entrance of foreign matter into the pipe. Under no circumstances shall sewers be used as drains for removing water which has accumulated in the construction trenches. At the beginning of a construction project, a watertight plug shall be installed in the connection manhole, or first manhole upstream, in order to prevent any inflow from entering the existing sewer system. Once the new system has been inspected and approved by the Town Engineering Inspector, this plug shall be removed by the Contractor in the presence of the Town Engineering Inspector. All related costs shall be borne by the Owner/Developer.

Unless otherwise noted on the plans, all sewer mains and laterals shall have a minimum of 5 feet of cover from finished grade.

All pipe and fittings shall be carefully examined for cracks and other defects before installation. All lumps, blisters and excessive coating shall be removed from the bell or coupling and spigot ends of each pipe. Defective pipe or fittings shall be laid aside for inspection by the Town Engineering Inspector who may prescribe corrective repairs or reject the pipe.

PVC pipe shall be installed in accordance with ASTM D2321 "Underground Installation of Flexible Thermoplastic Sewer Pipe", Uni-Bell Standard UNI B-5, the manufacturer's recommendations, and these specifications. All pipe and fittings shall be carefully lowered into the trench in such a manner as to prevent damage to the materials. Under no circumstances shall sewer main materials be dropped or dumped into the trench. PVC pipe with the potential for being stored outside and exposed to sunlight for more than 30 days shall be covered with an opaque material. Clear plastic sheets shall not be used to cover pipe. Both ends of the pipe shall be clear to allow for air circulation under the covering.

Immediately before joining two lengths of sanitary sewer pipe, the inside of the bell or coupling, the outside of the spigot, and the elastomeric gasket shall be thoroughly cleaned to remove all foreign material. Lubrication of the joint and rubber gasket shall be done in accordance with the pipe manufacturer's specifications.

Care shall be taken that only the correct elastomeric gasket, compatible with the annular groove of the bell, is used. Insertion of the elastomeric gasket in the annular groove of the bell or coupling must be in accordance

with the manufacturer's recommendations. Pipe that is not furnished with a depth mark shall be marked before assembly to assure that the spigot end is inserted to the full depth of the joint. The spigot and bell or coupling shall be aligned and pushed until the reference line on the spigot is flush with the end of the bell or coupling. Pushing shall be done in a smooth, steady motion.

E. Installation of Manholes

1. Excavation and Backfill

Excavation and backfill shall be performed in accordance with Sections 5-6A and 5-6C of these specifications.

2. Manhole Base

The manhole base shall be either precast or poured in place with Class A Portland Cement concrete if approved by the Town. The manhole stubs and sewer main shall be set before the concrete is placed and shall be rechecked for alignment and grade before the concrete has set. The various sized inlets and outlets to the manhole shall be located as indicated on the plans and as shown in Detail 9. The base shall be extended 8 inches below the bottom of the pipe for all manhole depths up to 14 feet and 12 inches below for depths greater than 14 feet. Invert elevations of connecting sewers may vary depending upon sizes. The crown elevation of all pipes shall be the same as the crown elevation of the largest pipe unless otherwise indicated on the shop drawings.

All channels shall be pummel stoned smooth and of the proper radius to give an uninterrupted transition of flow. The concrete shall be Class A concrete with ¾-inch maximum size aggregate and shall have a slump not greater than 2 inches. The concrete base shall be shaped with a wood float and shall receive a hard steel trowel finish before the concrete sets. In the event additional mortar is required after initial set has taken place, the surface to receive the mortar shall be primed, and the mortar mixed with "Willhold Concrete Adhesive" or approved equal, in the amounts and proportions recommended by the manufacturer and as directed by the Town Engineering Inspector in order to secure as "chip-proof" a result as possible. The base shall set a minimum of 24 hours before the manhole construction is continued.

The accumulation of water on the surface of the concrete due to water gain, segregation, or other causes during placement and compacting, shall be prevented as much as possible by adjustments in the mixture. Provisions shall be made for the removal of such accumulated water so

that under no circumstances will new concrete be placed in such accumulations.

When concrete is placed during cold weather, the temperature of the concrete mix shall not be lower than 50 degrees Fahrenheit. When concrete is placed during hot weather, the temperature of the concrete mix shall not be higher than 90 degrees Fahrenheit.

When concrete is deposited against ground without the use of forms, the ground shall be thoroughly moistened or other provisions made to prevent the ground from drawing water from the concrete.

3. Precast Manhole Sections

Each manhole section shall be placed in accordance with the manufacturer's recommendations in a perfectly plumb position. Each joint between the manhole sections shall either be an "O-ring" type joint or shall have a layer of flexible plastic/rubber joint sealing compound on both the tongue and groove part of the joint. Rubber gasketed joints for precast manhole sections shall be R-4 joint and designed in accordance with ASTM C443. Manhole joints may be joined with flexible plastic/rubber gaskets constructed of Ram-Nek, Rub'R-Nek, Con-Seal or equivalent. The concentric cone and steps shall be located over the downstream side of the manhole centered over the pipe. Coal tar epoxy lining shall be performed in accordance with these specifications.

4. Manhole Frames and Covers

Manhole frames and covers shall be set to the elevations shown on the plans, and shall match final grades. Manhole frames shall be set flush or 1/4" below the final grade of the asphalt or concrete roadway and shall be securely attached to the manhole shaft unit with a grout bed and fillet as shown in Detail 6. After the frames are securely set in the place provided herein, covers shall be installed and all necessary cleaning and scraping of foreign materials from the frames and covers shall be accomplished to ensure a satisfactory fit. In the event the manholes are placed in open space areas, the ring and cover shall be placed four inches above final grade in a collar of concrete. Provide precast concrete 2-inch high grade adjustment rings to bring the ring and cover to desired grade. A minimum of two (2) 2-inch adjustment rings are required with a maximum of six (6) grade adjustment rings being permitted. A maximum dimension of 18 inches shall be permitted between the manhole ring and the top manhole step. The eccentric cone and steps shall be located perpendicular to the pipe.

5. Watertightness of Manholes

Manholes and appurtenances shall be watertight and free from infiltration. The testing of the manholes is required; said test may be made in connection with the leakage test of the sanitary sewer main. Any leakage shall be repaired at the sole expense of the Owner/Developer.

6. Connection to Existing Manholes

New connections to existing manholes wherein stubs have not been provided shall be made by core drilling through the base or as approved by the Town Engineering Inspector.

7. Installation of Grout

Sealant consisting of a 3/8" to 1/2" thick layer of non-shrink cement grout extending a minimum of 4" on each side of all manhole segment joints shall be applied to the interior and exterior of all manhole joints. The cement grout shall be worked into the joint to completely fill all voids.

8. Installation of Coal Tar Epoxy Lining (Dampproofing)

The interior of all manhole structures shall receive coal tar epoxy lining. Coal Tar Epoxy shall conform to the physical and chemical requirements of this specification. When ground water is present, or potentially present in the opinion of the Town Engineering Inspector, an application of coal tar epoxy dampproofing material shall be applied to the completed manhole structure after the installation of cement grout if dampproofing is applied in the field. Dampproofing may be completed either at the fabrication yard or in the field, in accordance with the following conditions:

a. Surface Preparation:
   1) Remove foreign matter to clean concrete.
   2) Remove oil and grease with solvents.
   3) Protect adjacent surfaces not to be coated.
   4) Temperature of surface and air must be greater than 50 degrees F.

b. Application of Coal Tar
   1) Apply by spray application only.
   2) One coat only, 14 mils minimum dry film thickness.

c. Backfilling may take place when surface treatment is dry to the touch.

The excess joint compound shall be troweled smooth with the lining in the manhole, so that when the joint is properly made up, the joint compound will completely fill and seal the void, and the excess will be extended out of the inside of the joint.

When dampproofing material has been applied prior to manhole installation, all exterior joints shall receive Rub'R-Nek Concrete joint wrap, or approved equal.

All interior barrel surface and coated joint surface areas shall be thoroughly inspected for holidays at the place of application. Holiday testing will also be performed at the job site at the discretion of the Town Engineering Inspector. The operator shall make a small hole in the lining in the manhole and shall assure that the holiday detector is properly adjusted so that it can "find" the known holiday. All detected holidays shall be marked for easy location and patching.

F. Alignment and Grade Testing

After the sewer main and all appurtenances have been installed and all compaction test results have been submitted to and approved by the Town Engineering Inspector, but prior to paving, the line shall be inspected by the Town Engineering Inspector for alignment and grade.

Two methods are required for sanitary sewer inspection: T.V. inspection, and lamping.

Prior to any testing of the sewer mains, the lines shall be thoroughly flushed and balled to remove debris, dirt, or other foreign matter. The lowest manhole (or manholes) within the project shall be plugged with an approved water tight plug (Pollard or approved equal) on the downstream outlet of the manhole and all water, silt and debris shall be pumped from this manhole and disposed of properly. The above-mentioned plug shall be installed once the base for the lowest manhole has been constructed and shall not be removed at any time without the consent of the Town Engineering Inspector.

1. T.V. Inspection

Sewer mains that have been installed in a curvilinear horizontal alignment and those "straight-run" sewers that have been specified by the Town Engineering Inspector shall be viewed with the aid of a sewer T.V. camera system.

The Owner/Developer shall provide 24 hours notice prior to such inspection and the Town Engineering Inspector may request a CD with pictures or videotape copies of any area. Any defective portions of the

lines shall be corrected by the Owner/Developer in a manner acceptable to the Town Engineering Inspector. All costs for the T.V. inspection and any repairs, if necessary, shall be borne by the Owner/Developer.

2. Alignment Testing (Lamping)

a. Each section of pipeline on a linear alignment between manholes will be subject to testing by lamping by the Town Engineering Inspector to determine where proper alignment has been accomplished and whether any displacement of the pipe has occurred during construction.

   The Contractor and/or Developer shall provide suitable assistance to the Town Engineering Inspector in accomplishing this work. The Contractor and/or Developer shall be responsible for repairing any alignment, displaced pipe, or other defects discovered during this testing in accordance with these specifications.

b. For pipelines installed at grades less than 1%, a minimum of 90% of the full pipe cross-section shall be visible at the opposite end of the segment being observed.

c. For pipelines installed at grades less than 1%, a minimum of 75% of the full pipe cross-section at the opposite end of the segment shall be observed.

d. The determination of the acceptability of the pipeline alignment by lamping shall rest solely with the Town Engineering Inspector and his decision shall be final.

e. Pipelines not meeting the requirement of the alignment tests shall be completely excavated, removed, and relaid on prepared bedding material, backfilled and compacted in accordance with these specifications and then subjected to infiltration, air pressure and alignment testing.

G. Exfiltration and Infiltration Testing

Once the alignment and grade testing has been completed satisfactorily, a test for leakage and/or infiltration shall be performed. All materials and associated costs for such tests shall be at the Owner/Developer's expense.

1. Air Test

An Air Test shall be required on all new sanitary sewers.

Each section of sanitary sewer between two successive manholes shall be tested by plugging all pipe outlets with suitable test plugs. Air shall be slowly added until the internal pressure is raised to 4.0 psi. The compressor used to add air to the pipe shall have a blow-off valve set at 5.0 psi to assure that at no time the internal pressure in the pipe exceeds 5.0 psi. The internal pressure of 4.0 psi shall be maintained for at least two minutes to allow the air temperature to stabilize after which the air supply valve shall be closed and the pressure allowed to decrease to 3.5 psi. The time in minutes that is required for the internal air pressure to drop from 3.5 psi to 3.0 psi shall be measured and the results compared with the times listed in the table below. Pressure drop is calculated from the following equation:

$T = 0.000183d^2L$,
T = allowable time in seconds,
d = nominal pipe diameter in inches,
L = length of section to be tested in feet.

SPECIFICATION TIME (min:sec) FOR PRESSURE DROP FOR LENGTH BELOW

Pipe Diameter Inches	100 ft	200 ft	250 ft	300 ft
8	1:10	2:20	2:55	3:30
10	1:50	3:39	4:57	5:29
12	2:38	5:16	6:35	7:54
15	4:07	8:14	10:18	12:21

Pipe Diameter Inches	350 ft	400 ft	450 ft	500 ft
8	4:06	4:41	5:43	6:43
10	6:24	7:32	8:14	9:09
12	9:22	10:54	11:51	13:10
15	14:25	16:28	18:32	20:35

An air pressure correction is necessary when the prevailing groundwater is above the sewer line being tested. Under this condition, the air test pressure shall be increased 0.433 psi for each foot the groundwater level is above the invert of the pipe. If the prevailing groundwater is more than two feet above the invert of the pipe, the infiltration test shall be used. Internal air pressure should never exceed 5.0 psi. If the pressure drop from 3.5 psi to 3.0 psi occurs in less time than specified in the above table,

further inspection shall be conducted through the use of a T.V. camera to determine the defective area and the extent of such defect.

Corrective measures shall be submitted to the Town Engineering Inspector for approval. Such measures may include removal and replacement of the defective pipe. This process shall be repeated until the test section meets the specified limits. All costs for the testing and repair, if necessary, shall be borne by the Owner/Developer.

2. Infiltration and Inflow Test

During the construction of a section of the sewer between structures, if an excessive amount of groundwater is encountered, air testing for leakage shall not be used. If this occurs, the end of the sewer at the upper manhole shall be plugged with an approved watertight plug and the section shall be tested for infiltration. The infiltration shall not exceed 50 gallons per day, per inch of diameter, per mile of main line sewer being tested or as indicated in the table below, and does not include the length of house laterals entering that section.

ALLOWABLE LIMITS OF INFILTRATION
(50 Gal/Inch Dia/Mile/Day)

Pipe Diameter (Inches)	Maximum Allowable Infiltration in Gals/Hr/10 ft of Pipe
8	.0316
10	.0395
12	.0474
15	.0593

The amount of infiltration shall be measured through the use of a pipe weir, flume, or other approved apparatus in the presence of the Town Engineering Inspector. If the amount of infiltration exceeds the allowable limits, further inspection shall be conducted through the use of a T.V. camera to determine the location of the leak. Corrective measures shall be submitted to the Town Engineering Inspector for approval. Such measures may include removal and replacement of the defective pipe. All costs for the testing and repair, if necessary, shall be borne by the Owner/Developer.

H. Manhole Vacuum Testing

Manholes in areas of known or suspected areas of groundwater shall be vacuum tested after assembly and backfilling.

Care shall be taken to effect a seal between the vacuum base and the manhole rim. Pipe plugs shall be secured to prevent movement while the vacuum is drawn.

A vacuum of 10 inches of mercury shall be drawn. The time for the vacuum to drop to 9 inches of mercury shall be recorded.

Acceptance shall be defined as when the time to drop to 9 inches meets or exceeds the values shown in the table below.

If the manhole fails the test, necessary repairs shall be performed. Repairs and repair procedures must be acceptable to the Town Engineering Inspector.

Minimum Test Times for Manholes

Depth	Diameter (in.)		
(ft)	48	60	72
	Time (s)		
8	20	26	33
10	25	33	41
12	30	39	49
14	35	46	57
16	40	52	67
18	45	59	73
20	50	65	81
22	55	72	89
24	59	78	97
26	64	85	105
28	69	91	113
30	74	98	121

If preformed plastic gaskets are pulled out during the vacuum test, the manhole shall be disassembled and the gaskets shall be replaced.

Manholes and pipe lines shall not have any visible leaks.

Manholes that fail tests shall be repaired and retested until satisfactory results are obtained.

I. Cleaning

Prior to Substantial Completion, all accumulated construction debris, rocks, gravel, sand, silt, and other foreign material shall be removed from the sewer system. Mechanical rodding or bucketing equipment shall be used as required.

Upon final inspection, if any foreign matter is present in the system, Contractor/Owner shall flush and clean the sections of the line as required by the Town.

5-7 Sanitary Sewer Service Installation

A. Excavation

Excavation for sanitary sewer service lines shall be in accordance with Section 5-6A of these specifications.

In the event that a common trench is allowed for a sewer service line together with a water service line, the subgrade bench for the water service line shall have a minimum width of twelve inches (12"). This bench shall be excavated from undisturbed soil at an elevation no less than eighteen inches (18") above the top of the sanitary sewer service.

B. Pipe Foundation and Bedding

1. DIP and PVC Service Lines

Pipe foundation and bedding for PVC and DIP service lines shall be in accordance with Sections 5-6B and 5-4G, of these specifications with the exception that Class B bedding shall not be required unless PVC sewer service lines exceed a depth of cover of 15 feet.

C. Trench Backfilling and Compaction

Trench backfilling and compaction of sewer service lines shall be in conformance with Section 5-6C of these specifications.

D. Installation of Sanitary Sewer Service Lines

1. DIP and PVC Service Lines

Installation of PVC and DIP service lines shall be in accordance with Section 5-6D of these specifications.

Sewer services shall be connected to the main by means of a wye fitting entering the main at an angle of 45 degrees vertically above the spring line of the main. Service lines shall be extended from the main using a combination of no more than three 45 degree or 22-½ degree bends, unless otherwise approved by the Town. All service lines shall be plugged at the end of the line with a plug manufactured by Fernco, Inc., or approved equal.

Plugs must be able to withstand the internal pressure of leakage testing in accordance with Section 5-6G of these specifications.

Where new street construction is proposed immediately following construction of sanitary sewer facilities, extend the service line to 5 feet inside the property line, install the appropriate plug and mark with a vertical wood marker extending above the surface and having dimensions of 2” x 4” minimum.

2. Prohibition on Use of Side Easements

No sanitary sewer service lines shall be placed in any dedicated easements lying adjacent to lot lines.

E. Installation of Service Line Taps

Each structure and each subdivided lot shall be served by a separate service line. No compound taps are allowed. All service lines shall be connected to the main by means of either a PVC molded wye which was installed in conjunction with the main line or a PVC saddle in accordance with Section 5-4B of these specifications. Allowable combinations of service line connections are outlined in the table below.

The sewer main shall be scored to the shape of the wye using a template approved by the saddle manufacturer. The hole shall be cut with a hole cutter or keyhole saw and cleanly machined by hand to remove all burrs, rough edges, and debris. The exterior of the main shall be wiped clean and prepared with an approved cleaning solvent prior to the installation of the saddle. The saddle shall be drawn tight by means of stainless steel straps.

Upon completion of the tap, the main, tapping saddle and service line shall be bedded with Class A or Class B bedding as specified in Section 5-4G of these specifications, and hand tamped prior to backfilling. Saddle taps may be tested for leakage in accordance with Section 5-6G.

TAPPING REQUIREMENTS FOR SERVICE CONNECTIONS

Size of Main	PVC Sewer Main Material and Tap Size			
	4"	6"	8"	10" and over
8"	S/F	F	M	--
10"	S/F	S/F	M	M
12"	S/F	S/F	M	M

"S/F" -Tapping Saddle or Fitting (tee/wye) Required
"F" -Fitting Required
"M" -Manhole Required
"--” -Not Applicable

5-8 Grease Traps and Grease Interceptors

A. General

1. A grease interceptor or grease trap shall be provided when, in the judgment of the Town or District, it is necessary for the proper handling of liquid wastes containing grease or solids which may be harmful to, or cause obstruction of, the publicly owned wastewater collection system, or interfere with the operation of the publicly owned treatment works.

2. An adequate grease interceptor shall be installed, pursuant to these specifications, on the sanitary sewer system for any non-residential customer participating in the preparation and/or sale of food to the general public, including but not limited to restaurants, cafes, fast food outlets, pizza outlets, delicatessens, sandwich shops, and any and all other kinds and types of food vending establishments in which any food preparation (including heating and defrosting in or by means of any kind of oven or heating device) takes place on the premises, whether or not such facilities are located in a separate building or structure that is occupied by other businesses, as well as schools, churches, boarding houses with communal kitchen facilities, nursing homes, and day care centers which have kitchens and engage in the preparation of food. The adequacy of the grease interceptor or grease trap shall be determined by compliance with the design, sizing, and other requirements of this section.

   a. All drains from the kitchen food preparation and dishwashing areas shall be connected to a grease interceptor or grease trap. Fixtures to be connected include, but are not limited to, scullery sinks, pot and pan sinks, dishwashing machines, soup kettles, and floor drains located in areas where grease containing materials may exist.

   b. When deemed necessary by the Town or District, garbage disposals (garbage grinders) may be required to be connected to an approved grease interceptor. Connection of garbage disposals (garbage grinders) to grease traps will typically not be permitted.

   c. Toilets, urinals and similar fixtures shall not waste through a grease interceptor or grease trap. Such fixtures shall be plumbed directly into the building sewer and waste system.

3. A waiver for the requirement for a grease interceptor or grease trap on any non-residential structure may be granted after due consideration by the Town or District if good cause is shown including, without limitation, the particular hardship and unique circumstances of the customer which are not brought about as a result of the customer's acts or omissions. The granting of any waiver shall be at the sole discretion of the Director of Development Services based upon the facts and circumstances of each request.

B. Definitions

For the purpose of this regulation, the terms "grease interceptor" and "grease trap" shall be defined as follows:

1. Grease Interceptor: A unit of at least 1,000 gallons capacity designed to retain grease from one or more fixtures and which shall be located remote from the fixtures being served, typically outside the building being served. This is the minimum capacity allowed by the Town and the District.

2. Grease Trap: A unit designed to retain grease from one to four fixtures and which may be located inside the building being served. Generally these types of units will not be permitted in the Town or the District.

3. Fixture Unit Equivalent (FUE): A value which permits the comparison of different sized fixtures based on the drainage load produced. One (1) FUE = discharge flow rate of 7.5 gallons per minute.

C. Design and Sizing

1. General

The design and sizing of grease interceptors shall be in accordance with the International Plumbing Code, latest edition, and this section, and shall be designed, sized, installed, maintained, and operated so as to accomplish the intended purpose of intercepting of grease and solids from the customer's wastewater and preventing the discharge of such grease and solids to the regional wastewater treatment plant.

The edition of the International Plumbing Code currently utilized by the Pikes Peak Regional Building Department shall be applicable.

The size, type and location of each grease interceptor shall be approved by the Town or District, as applicable, in accordance with this section. Except where otherwise specifically permitted, no wastes other than those

requiring separation shall be discharged into any grease interceptors. Design plans for the grease interceptor, mechanical and plumbing sections, shall be submitted to the Town for approval along with the other construction documents for the project prior to construction. Such plans shall include the size, type, and location of each interceptor. Approval by the Town shall not exempt the user from compliance with any applicable code, ordinance, rule, regulation, or order of any governmental authority. Such approval shall not be construed as, or act as a guarantee or assurance that, any discharge is or will be in compliance with any applicable code, ordinance, rule, regulation, or order or any governmental authority. Any subsequent alterations or additions to such facilities shall not be made without due notice to, and prior approval of, the Town.

2. Design

   a. All waste shall enter the grease interceptor or grease trap through the inlet pipe only.

   b. Grease interceptors and grease traps shall be so designed and located as to be readily accessible for cleaning, and shall have a water seal of not less than six (6) inches for grease interceptors, and two (2) inches, or the diameter of the outlet, whichever is greater, for grease traps.

   c. Grease interceptors shall be constructed in accordance with the design specifications contained herein, and shall have a minimum of two (2) compartments with fittings designed for grease retention. There shall be a minimum of two (2) manholes to provide access for cleaning and inspection of all fixtures and compartments of the interceptor, a minimum of one (1) per ten (10) feet of the interceptor length. In the case of smaller or circular interceptors, where it is not practical to install two manholes, a single manhole shall be located so as to permit entrance to the first compartment, and inspection of the second. All areas of the second compartment shall be accessible for cleaning. Manhole covers shall be gastight in construction having a minimum opening dimension of twenty (20) inches. In areas where traffic may exist, the interceptor shall be designed to have adequate reinforcement and cover, meeting HS-20 load specifications. A flow control device will not be required preceding the grease interceptor.

   d. Grease traps shall be equipped with a flow control or restricting device installed in a readily accessible and visible location ahead of the grease trap. Flow control devices shall be designed and rated such that the flow through such a device shall at no time be greater

than the rated capacity of the grease trap. No flow control devices having adjustable or removable parts will be permitted.

e. If an existing grease trap does not meet the design and sizing criteria as set forth, the grease trap shall be replaced with a grease interceptor.

f. A grease trap will only be allowed in those establishments utilizing a grease trap at the time the Grease Interceptor/Grease Trap regulation was adopted.

g. For all new restaurant construction, or upon change of ownership of any existing restaurant, any application for sanitary sewer service shall demonstrate that a minimum of a 1,000 gallon functioning grease trap is installed and, in addition, a quarterly report showing cleaning of the grease trap shall be sent to the Town on a regular basis.

h. Grease interceptors and grease traps shall be so designed that they will not become air bound if closed covers are used. The tank and the discharge line shall each be vented, and the vents shall not tie together less than 42 inches above the tank lid elevation.

i. An effluent sampling box shall be provided on the discharge side of each grease interceptor or grease trap where so required by the Town.

3. <u>Sizing Criteria</u>

a. Grease Interceptors: When determining the minimum size of a grease interceptor required, the following shall be considered:

1) The minimum acceptable volume shall be not less than one thousand (1000) gallons.

2) The size of the grease interceptor shall be determined by the following formula:

Interceptor size (liquid capacity in gallons) = number of meals served per peak hour X waste flow rate X retention time X storage factor.

a) Meals served per peak hour = seating capacity X occupancy factor (0.80) X 2 meals per hour per seat

b) Waste flow rate:

With dishwashing machine	6 gallons
Without dishwashing machine	5 gallons
Food waste disposal	1 gallon

c) Retention time: 1.0 hour

d) Storage Factor:

Fully equipped commercial kitchen:	
8-hour operation	1
16-hour operation	2
24-hour operation	3
Single service kitchen	1.5

b. Grease Traps: Grease traps shall be sized based on one of the following methods:

1) Fixture Capacity Method: Under this method, the physical size of each fixture compartment to be connected to the grease trap shall be measured and the capacity determined. The drainage load in gallons shall then be computed assuming the drainage load to be equal to 0.75 times the total physical capacity. The sum of the drainage loads for each fixture compartment to be connected to a single grease trap will be the total grease trap drainage load. The total grease trap drainage load is then divided by the drainage period for the fixture compartments connected to determine the flow rate to the grease trap in gallons per minute. The grease trap flow rate thus determined, or the rated capacity of the flow control device, is then multiplied by the minimum retention time (15 minutes) to determine the required liquid capacity of the grease trap to be installed.

2) Fixture Unit Method: Under this method, the fixture compartment outlet or trap arm size shall be utilized to determine the fixture compartment drainage load in gallons per minute, assuming one (1) fixture unit equivalent produces a flow rate of 7.5 gallons per minute. The sum of the drainage loads for each fixture compartment to be connected to a single grease trap or the rated capacity of the flow control device will be the total grease trap drainage load in gallons per minute. This total drainage load in gallons per minute is then multiplied by the minimum retention time (15 minutes) to determine the required liquid capacity of the grease trap.

The following fixture unit equivalent values shall be utilized when verifying the size of an existing grease trap under the Fixture Unit Method:

Fixture Outlet Trap or Trap Arm Size	Fixture Unit Equivalent Value
1-1/4”	1
1-1/2”	3
2”	4
2-1/2”	5
3”	6
4”	8

3) The appropriate size for a grease trap is dependent on the drainage period of the fixtures connected to the trap. By adjusting the fixture drainage period through use of a flow control device, a smaller grease trap could be utilized for a given fixture size or capacity or, multiple fixtures could be connected to the same grease trap.

4) Where the existing grease trap size would exceed that which is commercially available or that which is required, a grease interceptor shall be utilized.

D. Installation

1. The installation of grease interceptors shall be in accordance with the International Plumbing Code, latest edition, and these specifications, and shall be accomplished in a workmanlike manner in compliance with the design and sizing requirements above.

   The edition of the International Plumbing Code currently utilized by the Pikes Peak Regional Building Department shall be applicable.

2. The installation of grease interceptors shall be accomplished by licensed plumbers with documented experience in the installation of such devices.

3. Each grease interceptor shall be readily accessible for inspection, servicing, and maintaining in proper working condition. The use of ladders or the removal of bulky equipment in order to inspect or service interceptors shall constitute a violation of accessibility. Where feasible, all interceptors shall be located outside of the facility served. Interceptors may not be installed in any part of a building where food is

handled. Location of all interceptors shall be approved by the Town, and shall be shown on the approved building and/or site development plans.

a. No dishwasher shall be connected to or discharge into any grease interceptor of less than 1,000 gallons capacity which is utilized by other fixtures. In these cases, automatic dishwashing units shall be plumbed through their own properly sized grease interceptor or directly into the building sewer and waste system.

b. No food grinder or disposal unit shall be connected to, or discharge into, any grease trap. Such units shall be plumbed through a properly sized grease interceptor or directly into the building sewer and waste system.

c. All fixtures not equipped with a garbage disposal (garbage grinder) which are connected to a grease interceptor shall be equipped with a fixed or removable mesh or screen which shall catch garbage and food debris and prevent it from entering the grease interceptor.

d. Wastes in excess of 140 degrees F shall not be discharged into a grease interceptor or grease trap, and liquid discharge from a grease interceptor or grease trap shall not exceed 70 degrees F.

E. Maintenance

1. Maintenance of grease interceptors and grease traps shall be done only by a business/professional normally engaged in the servicing of such plumbing fixtures. An individual property owner will not be permitted to accomplish maintenance specified by these regulations.

2. The Town or District, as applicable, shall provide a customer and/or maintenance business with a form for recording grease interceptor/grease trap maintenance (see Appendix). The maintenance business and customer shall provide one copy of the completed form to the Town or District within 14 calendar days of maintenance of any grease interceptor or grease trap within the Town or District, as applicable.

3. As a minimum, any grease interceptor in service in the Town shall be serviced at a maximum interval of 90 days.

   a. A waiver from this requirement may be obtained when the owner can confirm that there is no normal use during any given 90 calendar day period. With written authorization from the Director of

Development Services, the maximum time variance between services shall be 365 calendar days.

b. The Town or District may inspect the interceptor and outlet and, if it is deemed necessary by the Town, more frequent servicing and maintenance may be required as a result of such inspection.

4. As a minimum, any grease trap in service in the Town shall be serviced at a maximum interval of 30 days.

   a. A waiver from this requirement may be obtained when the owner can confirm that there is <u>no</u> normal use during any given 30 calendar day period.

   b. The Town or District may inspect the trap and outlet and, if it is deemed necessary by the Town or District, more frequent servicing and maintenance may be required as a result of such inspection.

5. Biological treatment shall not be a substitute for the pumping of grease interceptors and grease traps at the frequency determined by the Town or District. Emulsification of oil and grease with enzyme treatments only delays physical separation; therefore, biological treatment shall not be allowed.

6. The Town or District, as applicable, may inspect grease interceptors and grease traps monthly to determine the load on the fixture and effectiveness of maintenance activities. The Town or District will inventory all grease interceptors and grease traps in their service area and document the inspections of these interceptors and traps. These inspections may determine that more frequent maintenance than previously specified is required.

7. Existing sources not connected to a grease interceptor or grease trap which contribute oil and grease to the waste stream and collection system will be identified through the Town's inspection program. Once these sources are identified, they will be required to install a grease interceptor or grease trap and maintain it according to these guidelines. In the time before a grease interceptor or grease trap can be installed, the Town or District will require these businesses to implement Best Management Practices (BMPs) to keep oil and grease out of sanitary sewer system. These practices shall, at a minimum, include:

   a. Scrape food from plates into garbage cans.

b. Pre-wash plates by spraying them off with cold water over a small mesh catch basin positioned over a drain. This catch basin should be cleaned into a garbage can as needed.

c. Pour all liquid oil and grease from pots into a waste grease bucket stored at the pot washing sink. Heavy solid build-up of oil and grease on pots and pans should be scraped off into a waste grease bucket.

d. Other kitchen practices identified by the Town or District which will decrease the point source discharge of oil and grease.

F. Regulation

1. Property owners and lessees shall be jointly and severally responsible for cleaning grease interceptors and grease traps, for maintaining the grease interceptors and grease traps in efficient operating condition at all times, and for otherwise complying with the provisions of these rules and regulations. Grease interceptors and grease traps shall be maintained by regularly scheduled removal of the accumulated grease and solids so that they will properly operate as intended to intercept the grease and solids from the customer's wastewater and prevent the discharge of grease and solids to the Town's or District's wastewater treatment plant. This maintenance shall be performed in a workmanlike manner before the retention capacity of the interceptor or trap is exceeded. Detailed and accurate records of maintenance shall be maintained on-site and shall be provided to and available to the Town Public Works Department or the District Representative, as applicable, upon request. Such maintenance records shall be in the form provided at the end of this document, or such other form as reasonably required from time to time by the Town or District. The records shall include detailed information relating to the amount of grease removed compared to the size of the grease interceptor/trap.

2. A copy of the invoice and a manifest of disposal from the business/professional reporting the date the interceptor or trap was cleaned, the amount of grease, oil, and/or sand removed, the time, date and location the grease, oil, and/or sand was disposed, and a recommendation of how frequently the interceptor/trap should be cleaned must be sent to the Town Public Works Department or District Representative, as applicable, within 14 days after each cleaning. A copy of all interceptor/trap cleaning invoices is to be on file at the business being served and available to the Town Public Works Department or District Representative upon request. Failure to comply with the above could result in fines, penalties, or disconnection of service. The invoice for removal of interceptor and trap contents,

together with the waste disposal manifest, shall be attached to and made a part of the maintenance records required by these regulations.

3. The Town and the District reserve the right to levy any fines to such facilities that do not conform to the Town's or District's grease regulations. Retribution shall be paid to any surrounding businesses and/or homeowners for damage resulting from any non-compliance to these regulations. Any extraordinary cost incurred by the Town or District due to interference, damage, or special processing necessary in the treatment and/or collection system shall be paid by the business. The direct cost of all labor, equipment, and materials incurred in rectifying the interference or damage shall be billed directly to the business by the Town or District.

4. This regulation forms a part of the sewer use regulations of the Town of Monument and the Triview Metropolitan District. Enforcement of this regulation is governed by the express terms hereof. Any violation of this regulation for grease interceptors and grease traps shall be considered a discharge violation. Compliance with this regulation, as well as the other provisions of these regulations, shall be the joint and several obligation of the owner of the property served, and any party in possession of the property using the wastewater services of the Town or District. Any monies due or penalties to the Town or District under the provisions of this regulation shall constitute a lien upon the property.

5. The Town and the District have the right to reject any waste which may be harmful to, or cause obstruction of, the publicly owned wastewater collection system, or interfere with the operation of the publicly owned treatment works.

G. <u>Application</u>

1. This regulation applies to all existing and future uses within the scope of Section 5-8F above. For those businesses currently conducting operations subject to these regulations, they shall be provided a grace period of one year in which to come into full compliance with these regulations. The Town and the Triview Metropolitan District have determined that the enactment of this regulation is in the best interest of their customers, and is necessary for the efficient and proper operation and protection of the Town's/District's operations and facilities, and that this regulation is necessary and in furtherance of the health, benefit, and welfare of the Town's and District's customers.

5-9 Sand/Oil Interceptors

A. Regulation

1. A sand/oil interceptor shall be provided when, in the judgment of the Town or District, as applicable, it is necessary for the proper handling of sand, grit, and petroleum-based liquid waste which may be harmful to, or cause obstruction of, the publicly owned wastewater collection system, or interfere with the operation of the publicly owned treatment works. The Town or District will substantiate whether a sand/oil interceptor is suitable for installation. On a general basis, sand/oil interceptors will be recommended.

2. An adequate sand/oil interceptor shall be installed as specified on the sanitary sewer system from any non-residential customer participating in automotive service and repair, machine shops, and/or mechanics providing service to the general public, including but not limited to service stations, truck stops, gasoline stations, automotive/car care centers, auto body shops, automotive dealerships, car washes, motorcycle shops, welding shops, tractor/farm implement dealerships, truck/bus dealerships, bus barns, or any other facility that generates sand and grit or petroleum by-product waste that would discharge into the wastewater collection system. The adequacy of the sand/oil interceptor shall be determined by compliance with the design, sizing, and other requirements of this regulation.

   a. All drains from shop areas, washing areas and/or spill areas shall be connected to a sand/oil interceptor. Fixtures to be connected include, but are not limited to, floor drains, engine/parts cleaning sinks and wash areas located in areas where sand and petroleum-based liquid waste containing materials may exist.

   b. Toilets, urinals and similar fixtures shall not waste through a sand/oil interceptor. Such fixtures shall be plumbed directly into the building sewer and waste system.

3. A waiver from the requirement for a sand/oil interceptor for any non-residential structure may be granted after due consideration by the Town or District if good cause is shown including, without limitation, the particular hardship and unique circumstances of the customer which are not brought about as a result of the customer's acts or omissions. The granting of any waiver shall be at the sole discretion of the

Director of Development Services based upon the facts and circumstances of each request.

B. Definitions

For the purpose of this regulation, the terms shall be defined as follows:

1. Sand/Oil Interceptor: A unit of at least 500 gallons capacity designed to retain sand/oil from one or more fixtures and which shall be located remote from the fixtures being served, typically outside the building being served. This is the preferred unit of choice by the Town and the District.

2. Fixture Unit Equivalent (FUE): A value which permits the comparison of different sized fixtures based on the drainage load produced. One (1) FUE = discharge flow of 7.5 gallons per minute.

C. Design and Sizing

1. General

The design and sizing of sand/oil interceptors shall be in accordance with the International Plumbing Code, latest edition, and this section, and shall be designed, sized, installed, maintained and operated so as to accomplish their intended purpose of intercepting the sand/oil from the customer's wastewater and preventing the discharge of such sand and oil to the regional wastewater treatment plant.

The edition of the International Plumbing Code currently utilized by the Pikes Peak Regional Building Department shall be applicable.

The size, type and location of each sand/oil interceptor shall be approved by the Town or District, in accordance with this section. Except where otherwise specifically permitted, no wastes other than those requiring separation shall be discharged into any sand/oil interceptor. One set of plans, including complete mechanical and plumbing sections shall be submitted to the Town for approval prior to construction. Such plans shall include the size, type and location of each interceptor. Such approval shall not exempt the user from compliance with any applicable code, ordinance, rule, regulation or order of any governmental authority. Such approval shall not be construed as or act as a guarantee or assurance that any discharge is or will be in compliance with any applicable code, ordinance, rule, regulation or order of any governmental authority. Any subsequent

alterations or additions to such facilities shall not be made without due notice to and prior approval of the Town.

2. Design

a. All waste shall enter the sand/oil interceptor through the inlet pipe only.

b. Sand/oil interceptors shall be so designed and located as to be readily accessible for cleaning.

c. Sand/oil interceptors shall be constructed in accordance with the design specifications contained herein, and shall have a minimum of two (2) compartments with fittings designed for sand/oil retention. There shall be a minimum of two (2) manholes to provide access for cleaning and inspection of all fixtures and compartments of the interceptor, a minimum of one (1) per ten (10) feet of interceptor length. In the case of smaller or circular interceptors, where it is not practical to install two manholes, a single manhole shall be located so as to permit entrance to the first compartment, and inspection of the second. All areas of the second compartment shall be accessible for cleaning. Manhole covers shall be gastight in construction having a minimum opening dimension of twenty (20) inches. In areas where traffic may exist, the interceptor shall be designed to have adequate reinforcement and cover, meeting HS-20 load specifications.

d. Sand/oil interceptors shall be so designed that they will not become air bound if closed covers are used. The tank and the discharge line shall be vented, and the vents shall not tie together less than 42 inches above the tank lid elevation.

e. An effluent sampling box shall be provided on the discharge side of each sand/oil interceptor or grease trap where so required by the Town.

3. Sizing Criteria

When determining the minimum size of sand/oil interceptor, the following shall be considered:

a. The minimum acceptable volume shall not be less than five hundred (500) gallons.

b. Sand/Oil Interceptor Sizing Calculations

Size of Sand/Oil Interceptor = Square footage area of the facility/ Facility Factor X 7.48 gal/cu. ft. X retention time (2 hours).

Facility Factor

One (1) cu. ft. of interceptor capacity equals:

15 sq. feet of floor space at: Truck wash, heavy equipment wash.
50 sq. feet of floor space at: Automatic car wash.
75 sq. feet of floor space at: Car wash (hand held spray).
100 sq. feet of floor space at: Machine shop/work area/automotive workshop.
250 sq. feet of floor space at: Paint spray booth.
300 sq. feet of floor space at: Printer.

Machine Shops/Work/Storage Areas:

This includes but not limited to: motor vehicle, boat or airplane storage yards/garage, gasoline and diesel service stations, repair garage, storage warehouse, internal parking or truck loading/unloading bays.

Drainage from uncovered areas that are exposed to rainwater and/or storm water run-off shall be directed into the storm drainage system i.e. wash are and trash enclosures.

Maximum floor area of 3,000 sq. ft. = 500 gallon interceptor.
Floor area of 3,001 to 6,000 sq. ft. = 1000 gallon interceptor.
Floor area greater than 6,000 sq. ft. sizing requires approval by Town.

Car Wash:

This includes but not limited to: manual, auto and recycled car wash facilities.
Maximum wash floor area of 1500 sq. ft. = 500 gallon interceptor.
Wash floor area of 1,501 to 3,000 sq. ft. = 1,000 gallon interceptor.
Floor area greater than 3,000 sq. ft. sizing requires approval by Town

D. Installation

1. The installation of sand/oil interceptors shall be in accordance with the International Plumbing Code, latest edition, and these specifications,

and shall be accomplished in a workmanlike manner in compliance with the design and sizing requirements above. The edition of the International Plumbing Code currently utilized by the Pikes Peak Regional Building Department shall be applicable.

2. The installation of sand/oil interceptors shall be accomplished by licensed plumbers with documented experience in the installation of such devices.

3. Each sand/oil interceptor shall be readily accessible for inspection, servicing, and maintaining in proper working condition. The use of ladders or the removal of bulky equipment in order to inspect or service interceptors shall constitute a violation of accessibility. Where feasible, all interceptors shall be located outside of the facility served. Location of all interceptors shall be approved by the Town, and shall be shown on the approved building and/or site development plans.

E. Maintenance

1. Maintenance of sand/oil interceptors shall be done only by a business/professional normally engaged in the servicing of such plumbing fixtures. An individual property owner will not be permitted to accomplish maintenance specified by these regulations.

2. The Town or District, as applicable, shall provide a customer and/or a maintenance business with a form for recording sand/oil interceptor maintenance. The maintenance business and customer shall provide one copy of the completed form to the Town or District within 14 calendar days of maintenance of any sand/oil interceptor within the Town or District, as applicable. This form is included in the Appendix to these specifications.

3. As a minimum, any sand/oil interceptor in service in the Town or District shall be serviced at a maximum interval of 90 days.

   a. A waiver from this requirement may be obtained when the owner can confirm that there is no normal use during any given 90 calendar day period. With written authorization from the Town or District, the maximum time variance between services shall be 365 calendar days.

   b. The Town or District may inspect the interceptor and outlet and, if it is deemed necessary by the Town or District, more frequent servicing and maintenance may be required as a result of such inspection.

4. Biological treatment shall not be a substitute for the plumbing of sand/oil interceptors at the frequency determined by the Town or District.

5. The Town or District may inspect the sand/oil interceptor monthly to determine the load on the fixture and the effectiveness of maintenance activities. The Town or District, as applicable, will inventory all sand/oil interceptors in their service area and document the inspections of these interceptors. These inspections may determine that more frequent maintenance than previously specified is required.

6. Existing sources not connected to a sand/oil interceptor which contribute sand and oil to the waste stream and collection system will be identified through the Town's/District's inspection program. Once these sources are identified, they will be required to install a sand/oil interceptor and maintain it according to these guidelines. In the time before a sand/oil interceptor can be installed, the Town or District will require these businesses to implement Best Management Practices (BMPs) to keep sand and oil out of the sanitary sewer system. These practices, at a minimum, include:

    a. Avoid dumping petroleum-based waste products into the waste collection system.

    b. Discontinue the use of wash facilities until such time a suitable system is in place to intercept sand, grit, and petroleum-based products.

    c. Other practices identified by the Town and/or facility which will decrease the point source discharge of sand and oil.

APPENDIX

	Page
Peaking Factor Chart	101
Grease-Sand/Oil Interceptor Maintenance Report	102
Standard Detail Drawings	103

PEAKING FACTOR CHART

1. **Peaking Factor (PF) Single/Multi Family:** Convert the average daily flows for single-family and multi-family to peak day flows (maximum day) using the following table:

RESIDENTIAL PEAKING FACTORS FOR WASTEWATER FLOWS	
(Gravity lines)	
Population	Peaking Factor (PF)
100	3.6
112	3.5
125	3.4
150	3.3
175	3.2
200	3.1
250	3.0
300	2.9
350	2.8
450	2.7
500	2.6
750	2.5
1000	2.4
1500	2.3
2000	2.2
3000	2.1
4500	2.0
8000	1.9

2. **Peaking Factor (PF) Commercial and Industrial:** Convert the average daily flows for commercial and industrial to peak day flows using a constant peaking factor value of 2.0. This results in a peak day flow of 3000 gallons per acre per day for commercial and industrial.

TOWN OF MONUMENT
GREASE-SAND/OIL INTERCEPTOR MAINTENANCE REPORT

Business Information			
Company			
Owner			
Type of Business			
Address			
City/State/Zip	Monument, CO 80132		
Phone		E-Mail	
Other phone		Fax	

Cleaning/Repair Contractor			
Company			
Technician			
Address			
City/State/Zip			
Phone		E-Mail	
Other phone		Fax	

Facility Information			
Type of Device(s)			
Total Capacity			
Date Cleaned		Total Product Hauled Away in Gallons:	
Services Performed			
Next Service Date			

Comments:

Verification of Service: By signing this report, I certify that the above information is accurate and that the device(s) stated was pumped-out and cleaned by the contractor of record on the date stated herein.

Facility Manager Signature: _____ Date: _____

Maintenance reports are to be completed every 90 days at a minimum and made available for 3 years.

STANDARD DETAIL DRAWINGS

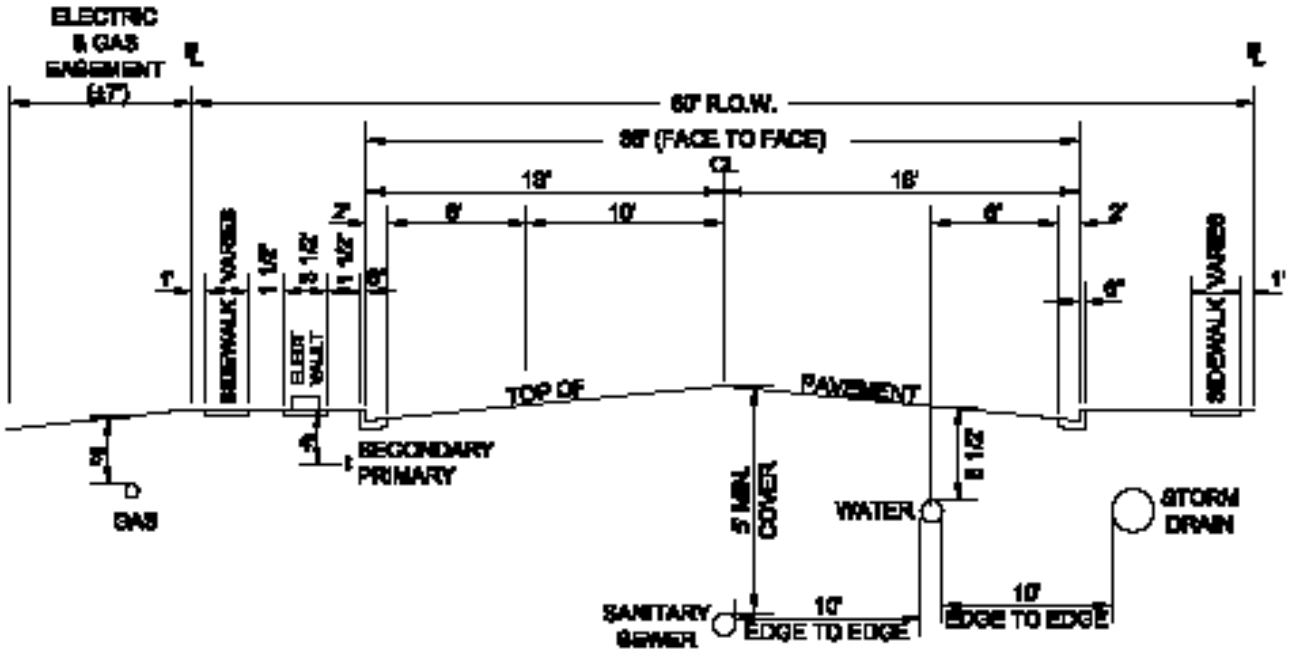

TYPICAL CROSS SECTION
UTILITIES LOCATION

60' R.O.W. COLLECTOR STREETS

NOTES:

1. STORM DRAINS AND SANITARY SEWERS SHALL MAINTAIN A 10' HORIZONTAL SEPARATION FROM WATER LINES (EDGE TO EDGE). REFER TO SUBSECTION 4-2.C.
2. ELECTRIC CONDUITS SHALL BE ON THE OPPOSITE SIDE OF THE STREET FROM WATER LINE.
3. ALTERNATIVE LOCATION FOR ELECTRIC SHALL BE WITHIN +/- 7 FT EASEMENT.

MONUMENT COLORADO
Proud of our past... Confident of our future!

TYPICAL UTILITIES LOCATION

DATE: FEBRUARY 2011	SCALE: NONE	DETAIL 1
PREPARED BY: NOLTE BEYOND ENGINEERING		
JOB NUMBER CSB040012	1101 RESEARCH PARKWAY, Suite 100 COLORADO SPRINGS, CO 80920 719.268.6300 TEL 719.268.6333 FAX WWW.NOLTE.COM	

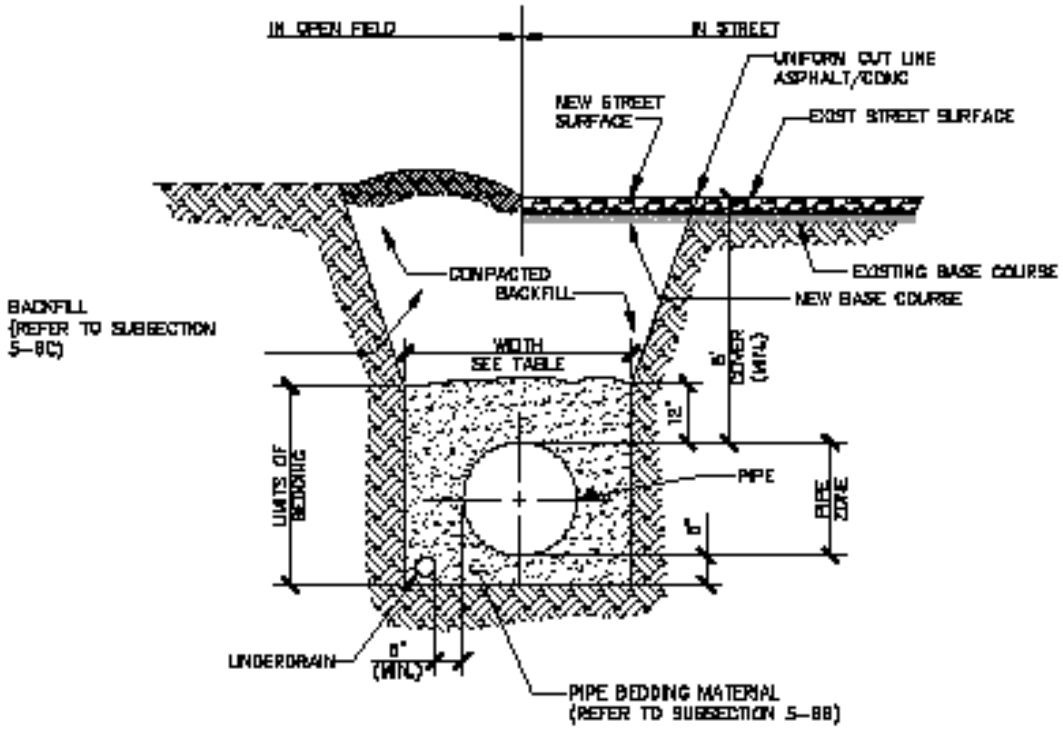

TYPICAL TRENCH SECTION

NOTES:

1. PAVING SURFACE SHALL COMPLY WITH TOWN STANDARDS.
2. TRENCH WALLS TO BE SUPPORTED AS REQUIRED BY OSHA-SUBPART P.
3. MINIMUM COVER TO BE BELOW STREET GRADE (SEE DETAIL 1).

PIPE ø	MIN WIDTH	MAX WIDTH
4"	1'-4"	2'-4"
6"	1'-6"	2'-6"
8"	1'-8"	2'-8"
12"	2'-0"	3'-0"
16"	2'-4"	3'-4"
20"	2'-8"	3'-8"
24"	4'-0"	5'-0"

2005 MODIFIED DRAWING FROM DENVER WATER
[SHEET 10]

MONUMENT COLORADO
Proud of our past...Confident of our Future!

TYPICAL TRENCH SECTION PIPE PROTECTION

DATE: FEBRUARY 2011 | SCALE: NONE

PREPARED BY: NOLTE

JOB NUMBER CSB04C012

DETAIL 2

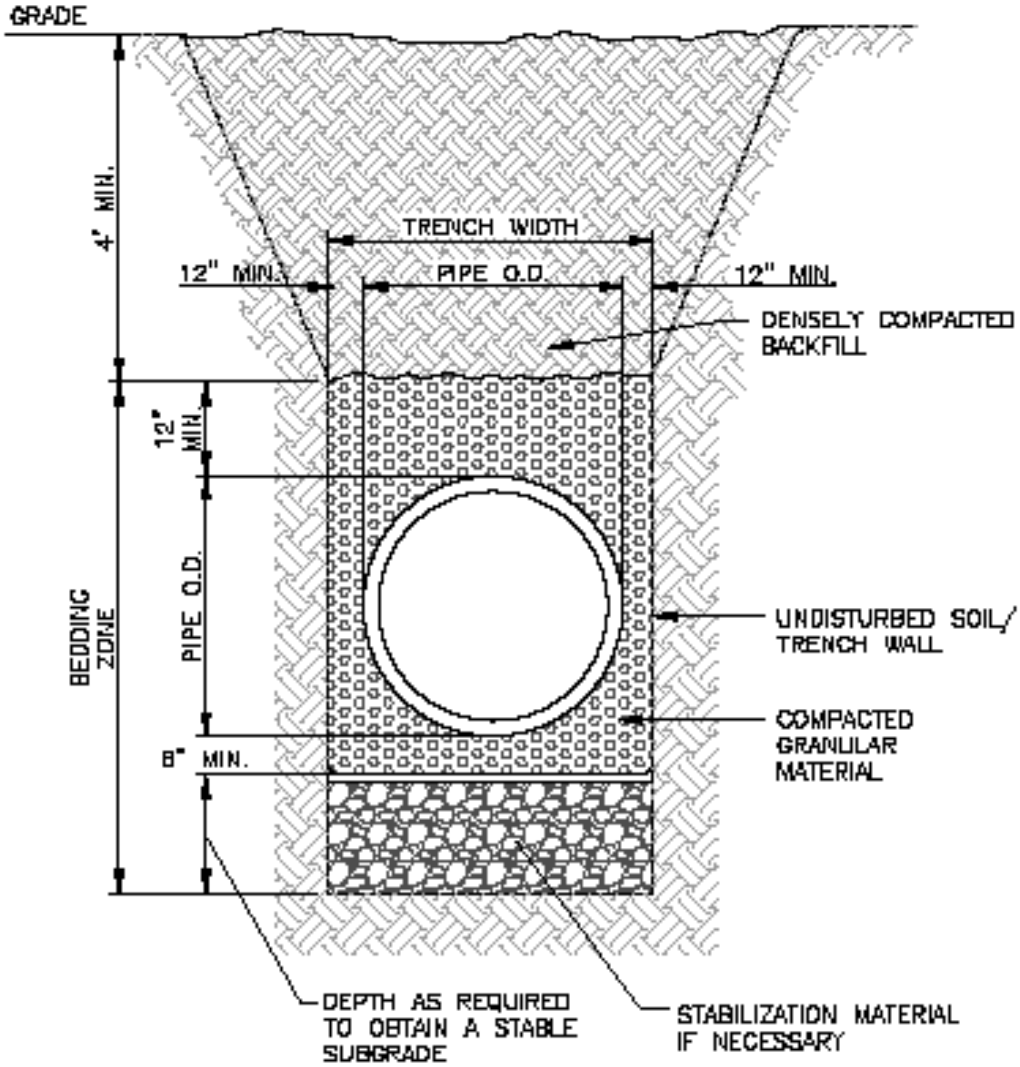

MONUMENT COLORADO

Proud of our past... Confident of our Future!

PIPE BEDDING DETAILS FOR SEWER

DATE: FEBRUARY 2011	SCALE: NONE

PREPARED BY: NOLTE

JOB NUMBER CS8040012

DETAIL 3

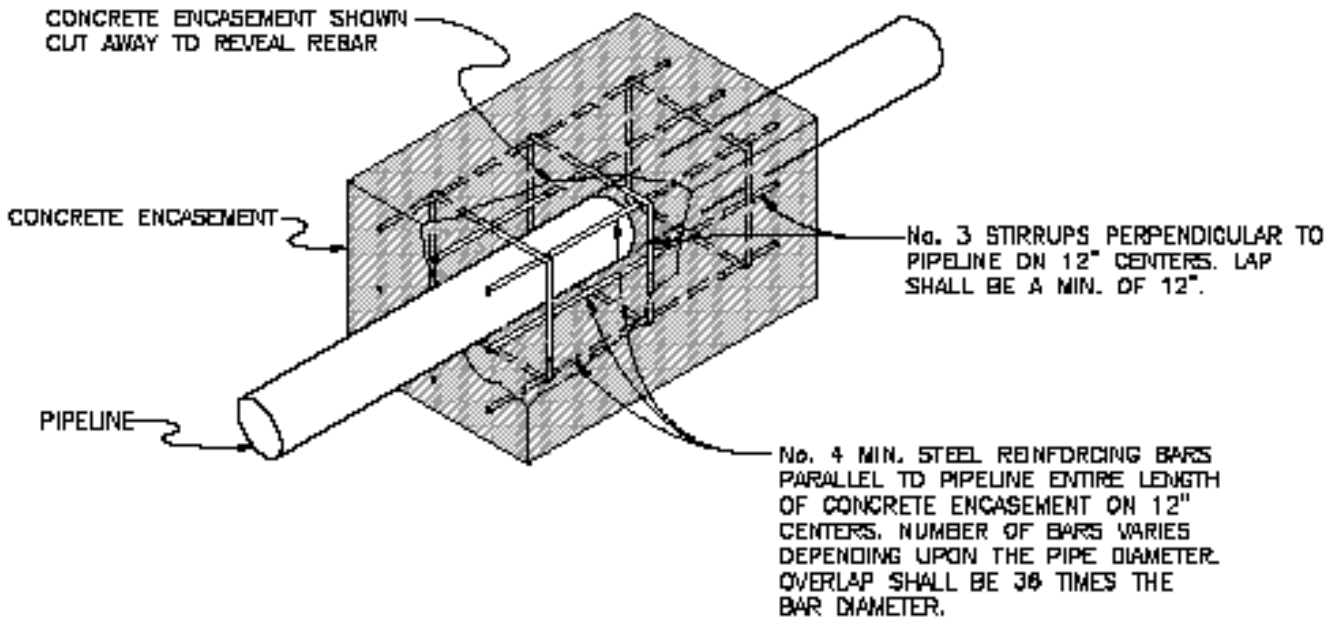

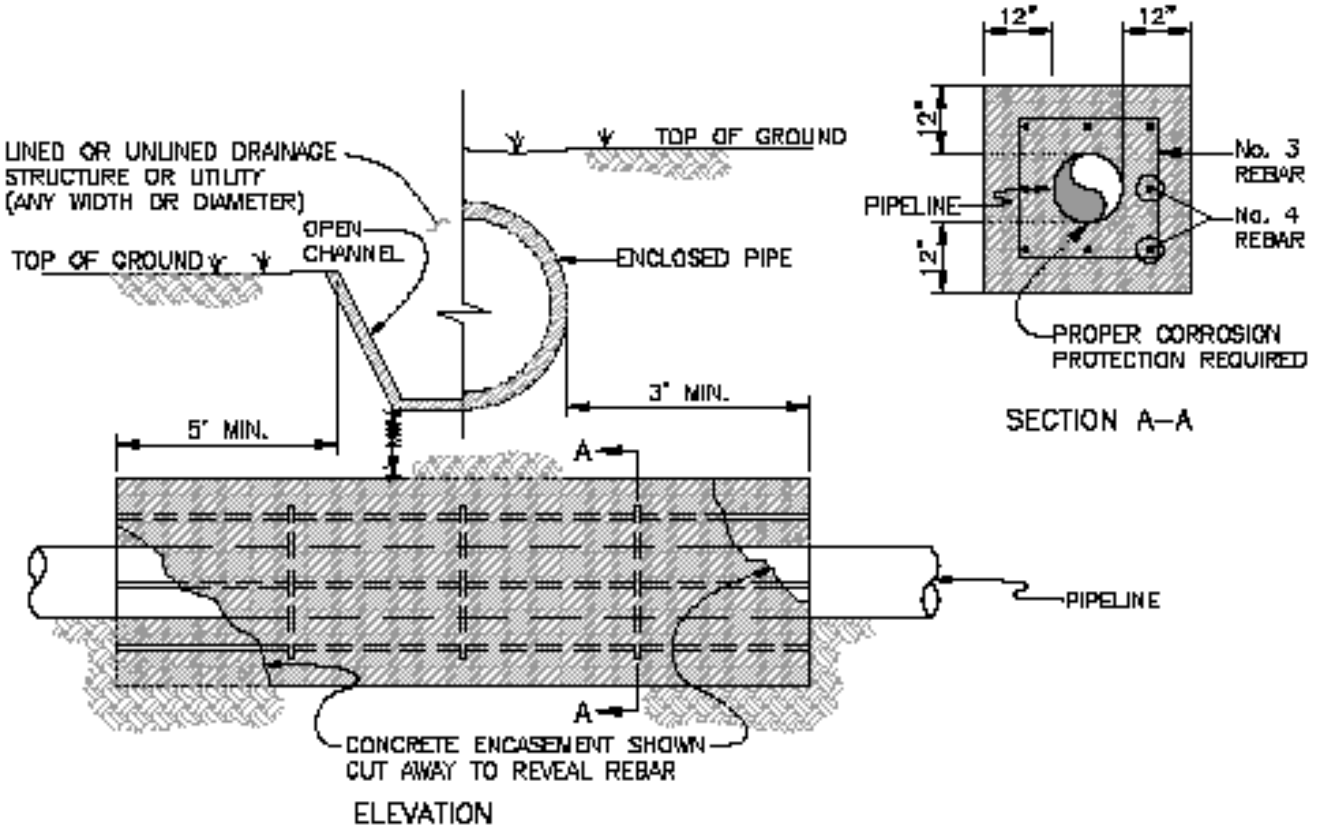

MONUMENT COLORADO

Proud of our past... Confident of our future!

PIPE ENCASEMENT DETAIL

DATE: FEBRUARY 2011	SCALE: NONE	DETAIL 4
PREPARED BY: NOLTE		
JOB NUMBER CSB040012		

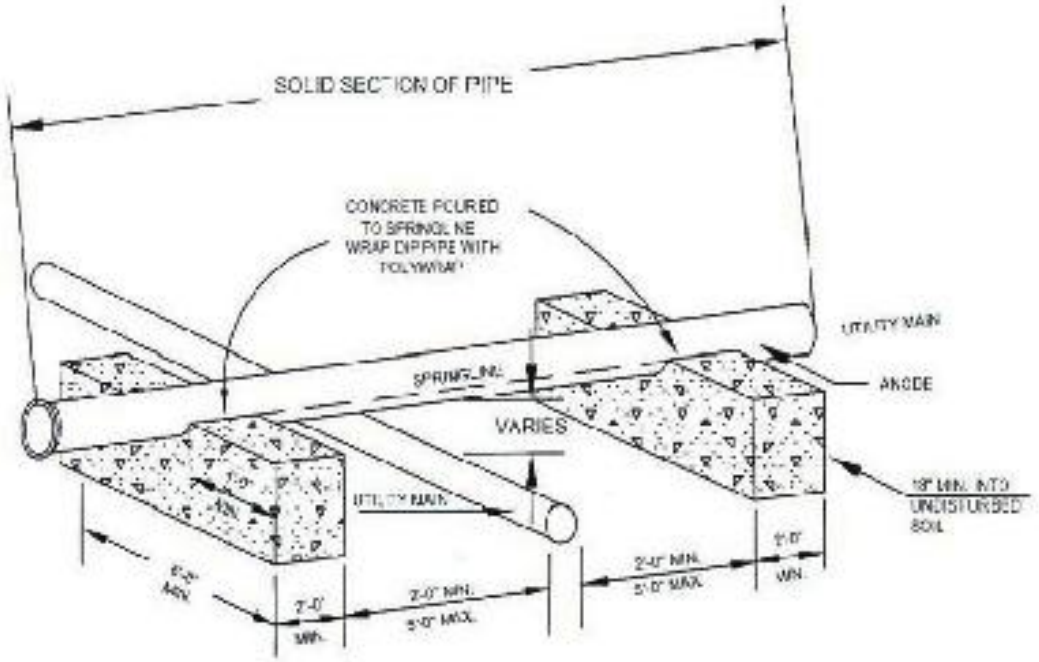

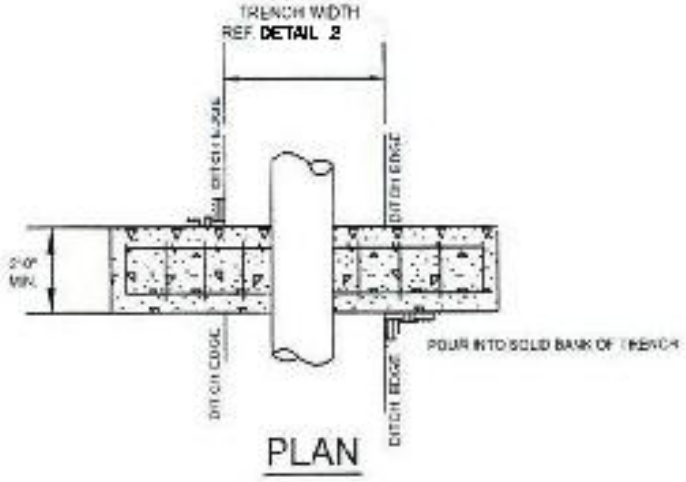

PLAN

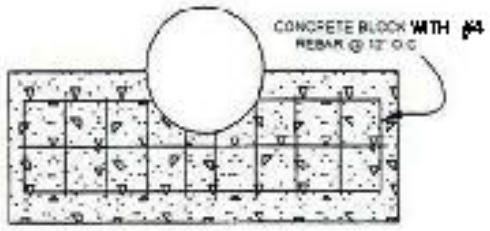

ELEVATION

NOTE:

1. Blocks will be reinforced with No. 4 rebar, set on 12" centers.
2. No joints of new utility main allowed between concrete bridging blocks.
3. Helical pier anchors maybe used depending on site conditions and locations.

2005 MODIFIED DRAWING FROM COLORADO SPRINGS UTILITIES [DETAIL A 8-6]

MONUMENT COLORADO

Proud of our past... Confident of our future!

PIPE BRIDGING DETAIL

DATE: FEBRUARY 2011	SCALE: NONE

PREPARED BY: NOLTE

JOB NUMBER CSB040012

DETAIL 5

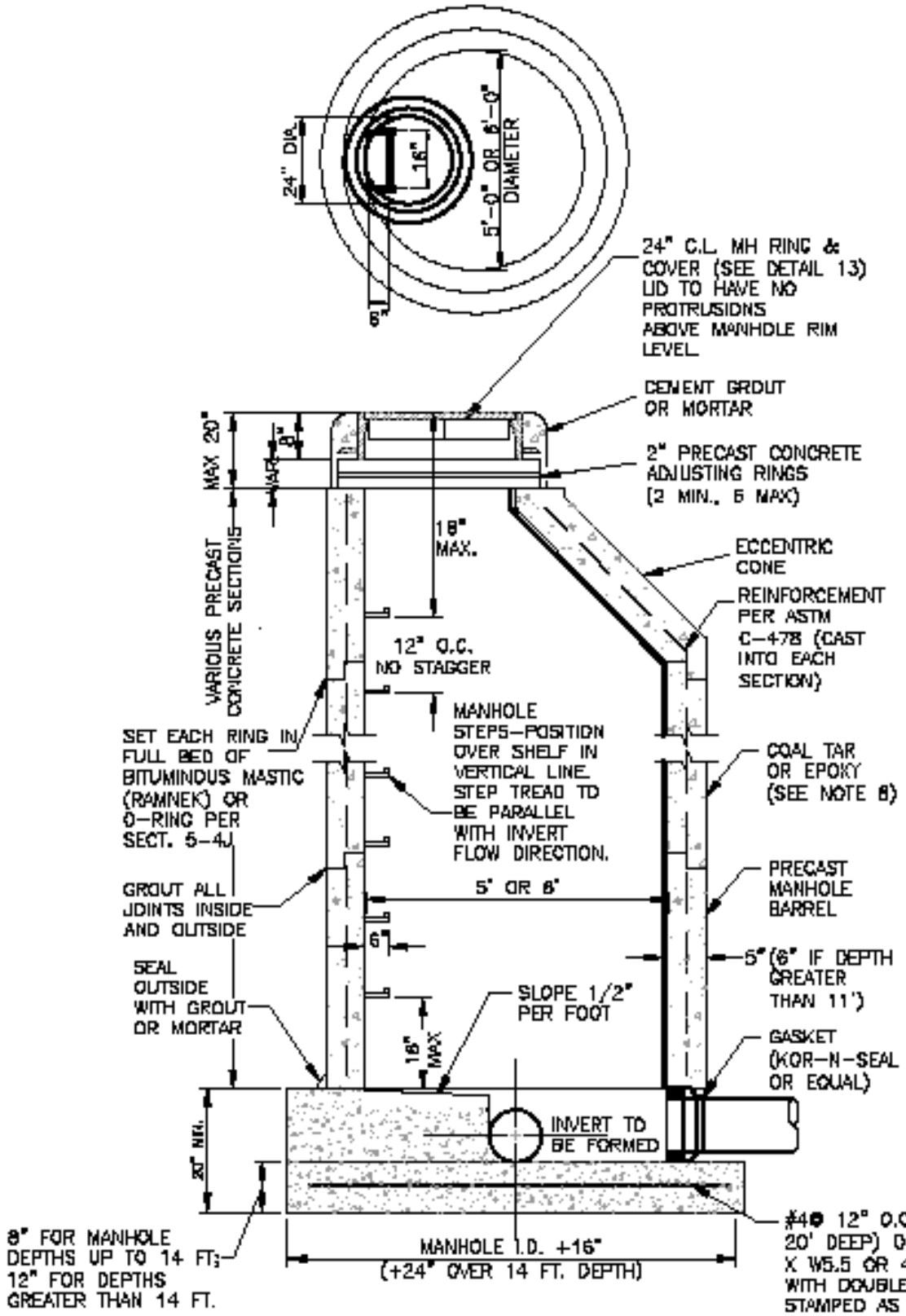

NOTES:

1. MANHOLE BARREL INSIDE DIAMETER SHALL CONFORM TO TABLE IN SECTION 4-2.E.2.

2. SHAPING FOR SMOOTH MANHOLE INVERTS MUST BE DONE BY FORMING/SHAPING CONCRETE BASE.

3. MANHOLE STEPS SHALL BE POLYPROPYLENE OR ALUMINUM PER DETAIL 14.

4. PRECAST SECTIONS TO CONFORM TO ASTM C-478.

5. STUB-OUTS SHALL EXTEND 4" PAST MANHOLE O.D. AND BE SATISFACTORILY PLUGGED.

6. CONCRETE MANHOLES MAY BE POURED IN PLACE ONLY WITH PRIOR APPROVAL BY THE TOWN.

7. ALL MORTAR GROUT SHALL BE MIXED WITH TYPE II OR II LA PORTLAND CEMENT.

8. APPLY COAL TAR EPOXY COATING TO ALL INTERIOR CONCRETE SURFACES. WHERE GROUND WATER IS PRESENT, THE ENTIRE MANHOLE STRUCTURE SHALL RECEIVE COAL TAR EPOXY COATING.

9. CENTER REINF. OR WIRE MESH IN BASE POUR BELOW PIPE O.D. AT FLOOR.

10. ALL MANHOLES SHALL BE CONSTRUCTED TO MEET HS20-44 LOADING.

11. ALL CONCRETE SHALL HAVE A MINIMUM COMPRESSIVE STRENGTH OF 3000 PSI @ 28 DAYS.

12. ALL MANHOLES PLACED IN OPEN SPACE AREAS SHALL BE INSTALLED WITH THE RING AND COVER AT 4 INCHES ABOVE FINAL GRADE.

MONUMENT COLORADO

Proud of our past... Confident of our future!

PRECAST MANHOLE

DATE: FEBRUARY 2011	SCALE: NONE	DETAIL 6
PREPARED BY: NOLTE ENGINEERING		
JOB NUMBER CSB040012		

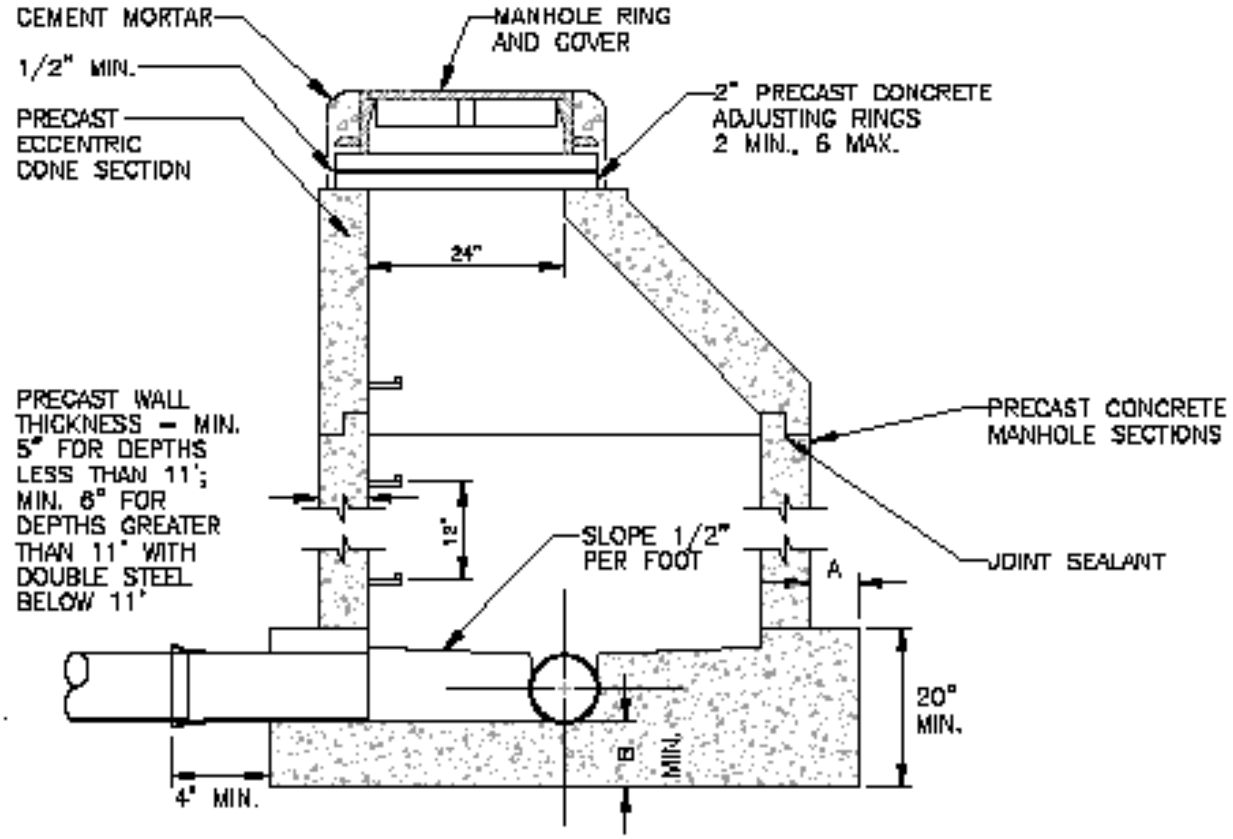

M.H. DEPTH	DIMENSION	
	A	B
0' TO 14'	8"	8"
OVER 14'	12"	12"

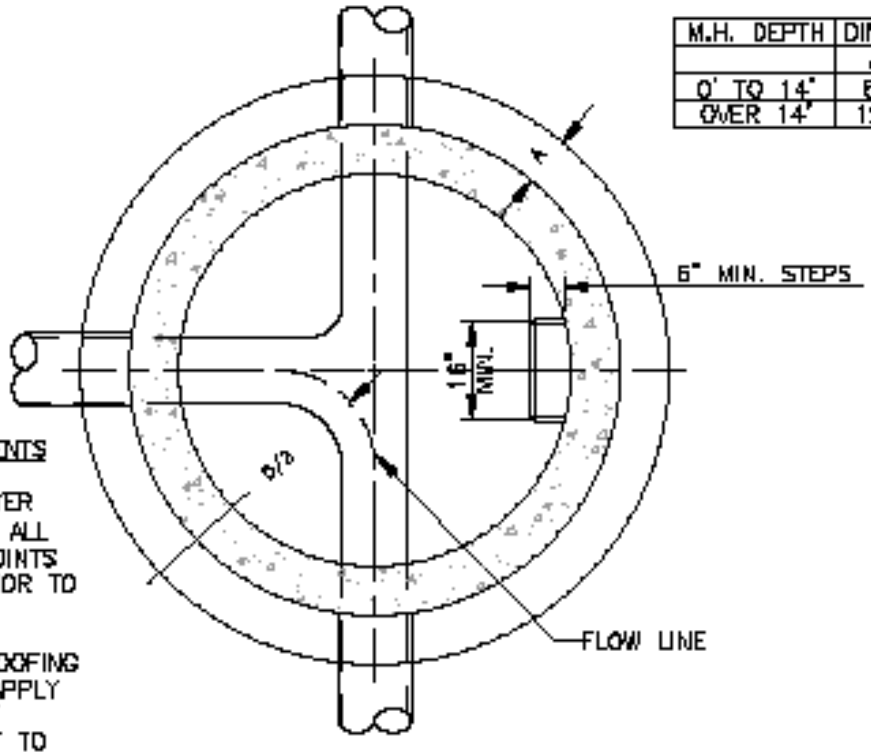

WATER TIGHTNESS REQUIREMENTS

1. APPLY CEMENT GROUT LAYER (3/8" TO 1/2" THICK) TO ALL INTERIOR AND EXTERIOR JOINTS ABOVE FLOW CHANNEL PRIOR TO DAMPPROOFING.

2. APPLY COAL TAR DAMPPROOFING TO ALL INTERIOR WALLS. APPLY TO EXTERIOR SURFACES IF GROUNDWATER IS THOUGHT TO BE PRESENT.

MONUMENT COLORADO
Proud of our past... Confident of our future!

PRECAST SANITARY SEWER MANHOLE DETAILS

DATE: FEBRUARY 2011 | SCALE: NONE

PREPARED BY: NOLTE

JOB NUMBER CSB040012

DETAIL 7

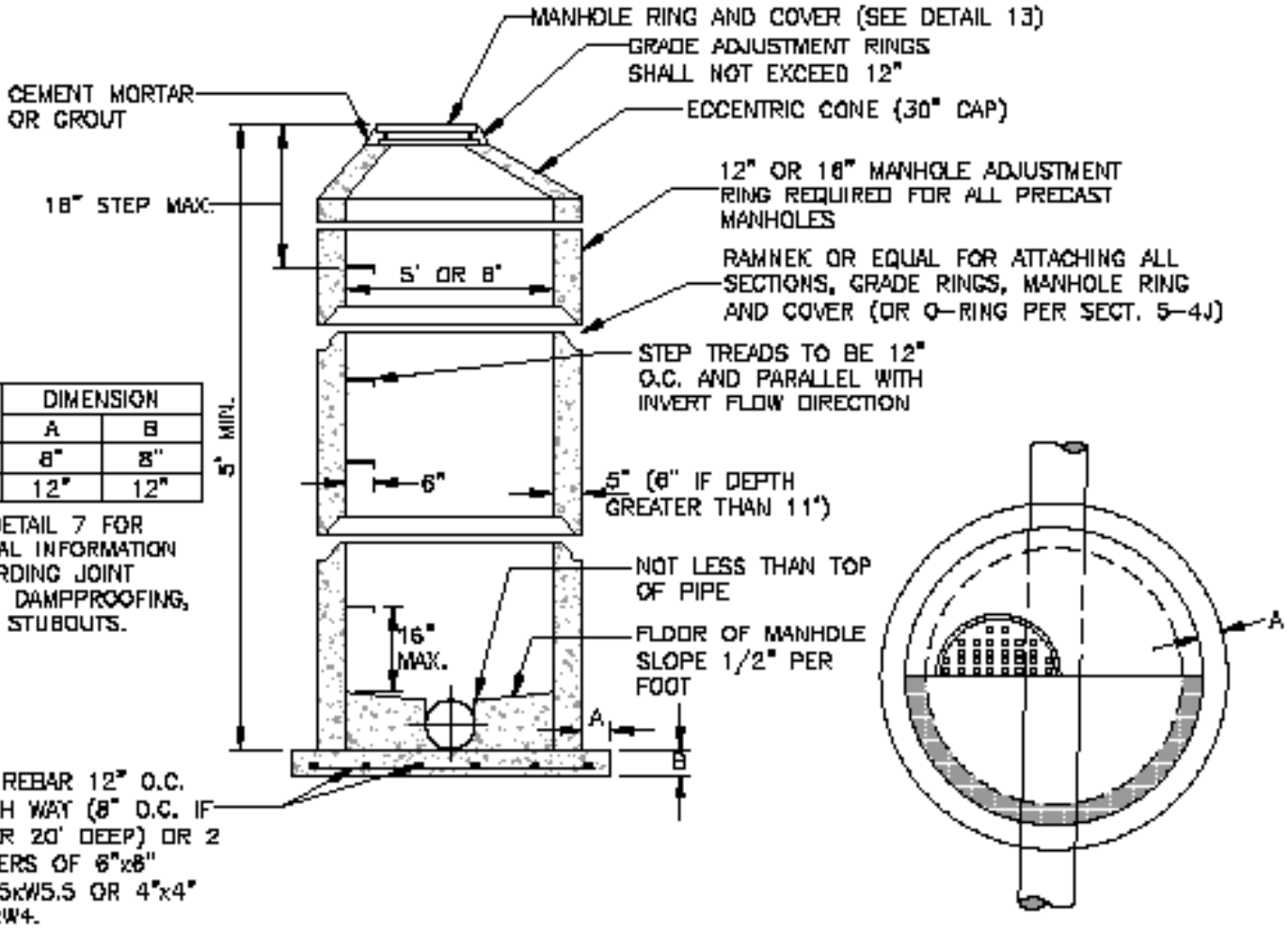

MANHOLE DEPTH	DIMENSION	
	A	B
0' TO 14'	8"	8"
OVER 14'	12"	12"

SEE DETAIL 7 FOR ADDITIONAL INFORMATION REGARDING JOINT SEALANTS, DAMPPROOFING, AND STUBOUTS.

NOTES:

1. ALL JOINTS TO HAVE PRE-FORMED PLASTIC GASKET (2 PER JOINT) WITH REQUIRED PRIMER.
2. ALL MANHOLES PLACED IN OPEN SPACE AREAS SHALL BE INSTALLED WITH THE RING AND COVER AT AN ELEVATION THAT IS 4" ABOVE FINAL GRADE.
3. WIRE HOOPS OR MESH TO BE CAST INTO EACH SECTION.
4. IN MANHOLES GREATER THAN 20' IN DEPTH DOUBLE WIRE MESH SHALL BE USED IN MANHOLE BARREL SECTIONS. MANHOLES WITH DOUBLE WIRE MESH SHALL BE STAMPED AS SUCH.
5. ALL MANHOLES SHALL BE CONSTRUCTED TO MEET HS 20-44 LOADING.
6. ALL CONCRETE SHALL HAVE A MINIMUM COMPRESSIVE STRENGTH OF NOT LESS THAN 3000 PSI @ 28 DAYS.
7. ALL CONCRETE SHALL BE MECHANICALLY VIBRATED.
8. DO NOT DROP CONCRETE A DISTANCE OF MORE THAN 5' UNLESS APPROVED BY THE TOWN.

MONUMENT COLORADO
Proud of our past... Confident of our future!

CAST-IN-PLACE CONCRETE MANHOLE

DATE: FEBRUARY 2011 | SCALE: NONE

PREPARED BY: NOLTE

JOB NUMBER CS8040012

DETAIL 8

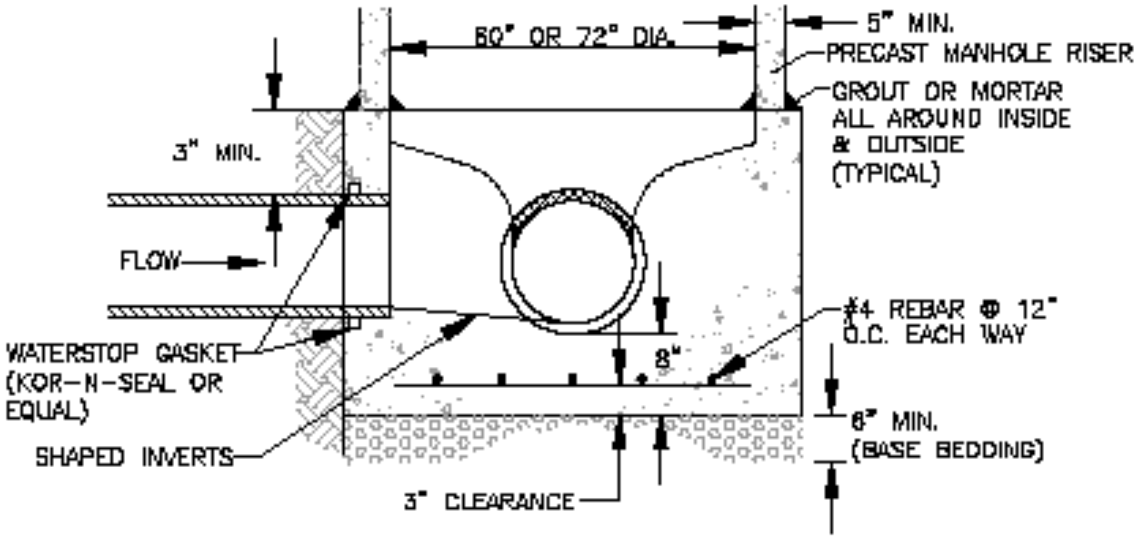

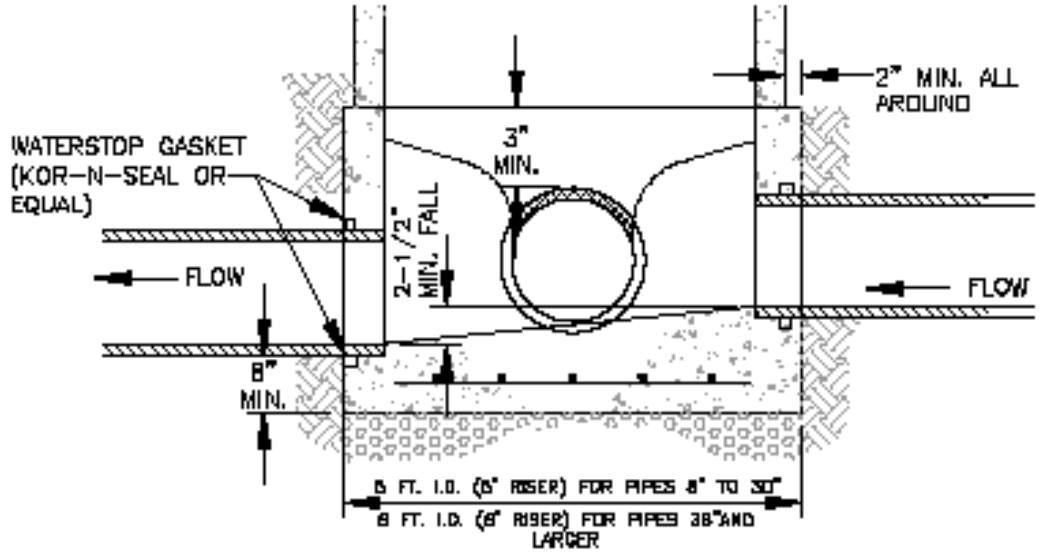

MONUMENT COLORADO

Proud of our past... Confident of our future!

STANDARD MANHOLE BASE

DATE: FEBRUARY 2011	SCALE: NONE	DETAIL 9
PREPARED BY: NOLTE ENGINEERING		
JOB NUMBER CS8040012		

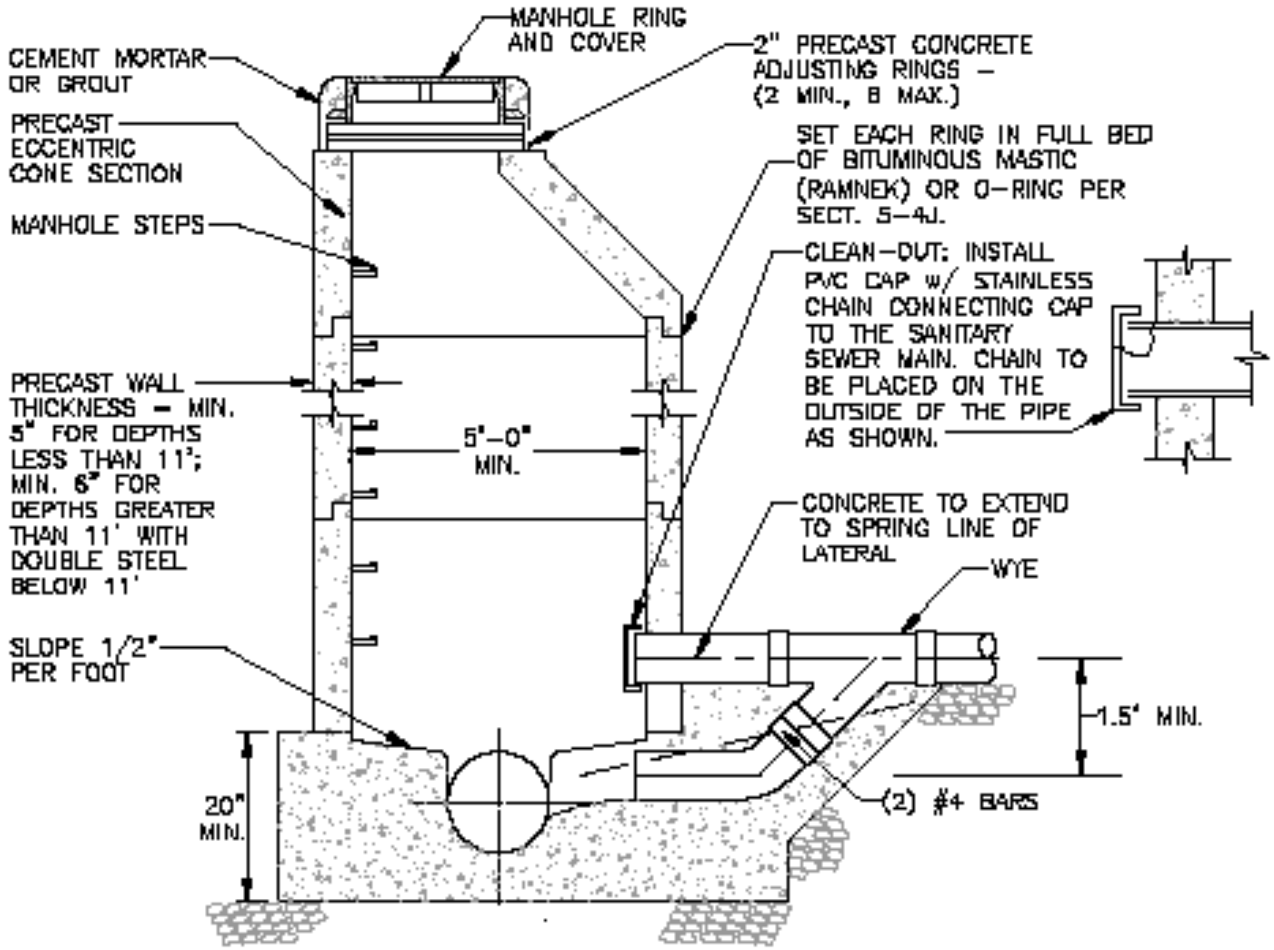

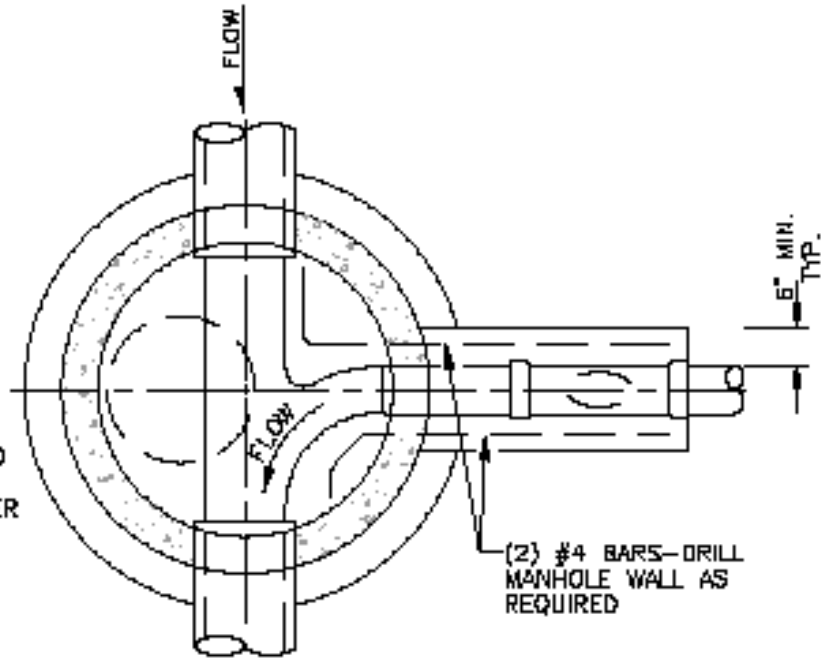

WATER TIGHTNESS REQUIREMENTS

1. APPLY CEMENT GROUT LAYER (3/8" TO 1/2" THICK) TO ALL INTERIOR AND EXTERIOR JOINTS ABOVE FLOW CHANNEL PRIOR TO DAMPPROOFING.
2. APPLY COAL TAR DAMPPROOFING TO ALL INTERIOR WALLS. APPLY TO ALL EXTERIOR CONCRETE SURFACES IF GROUNDWATER IS THOUGHT TO BE PRESENT.

MONUMENT COLORADO
Proud of our past... Confident of our future!

SANITARY SEWER DROP MANHOLE DETAIL

DATE: FEBRUARY 2011	SCALE: NONE	DETAIL 10
PREPARED BY: NOLTE ENGINEERING		
JOB NUMBER CS8040012		

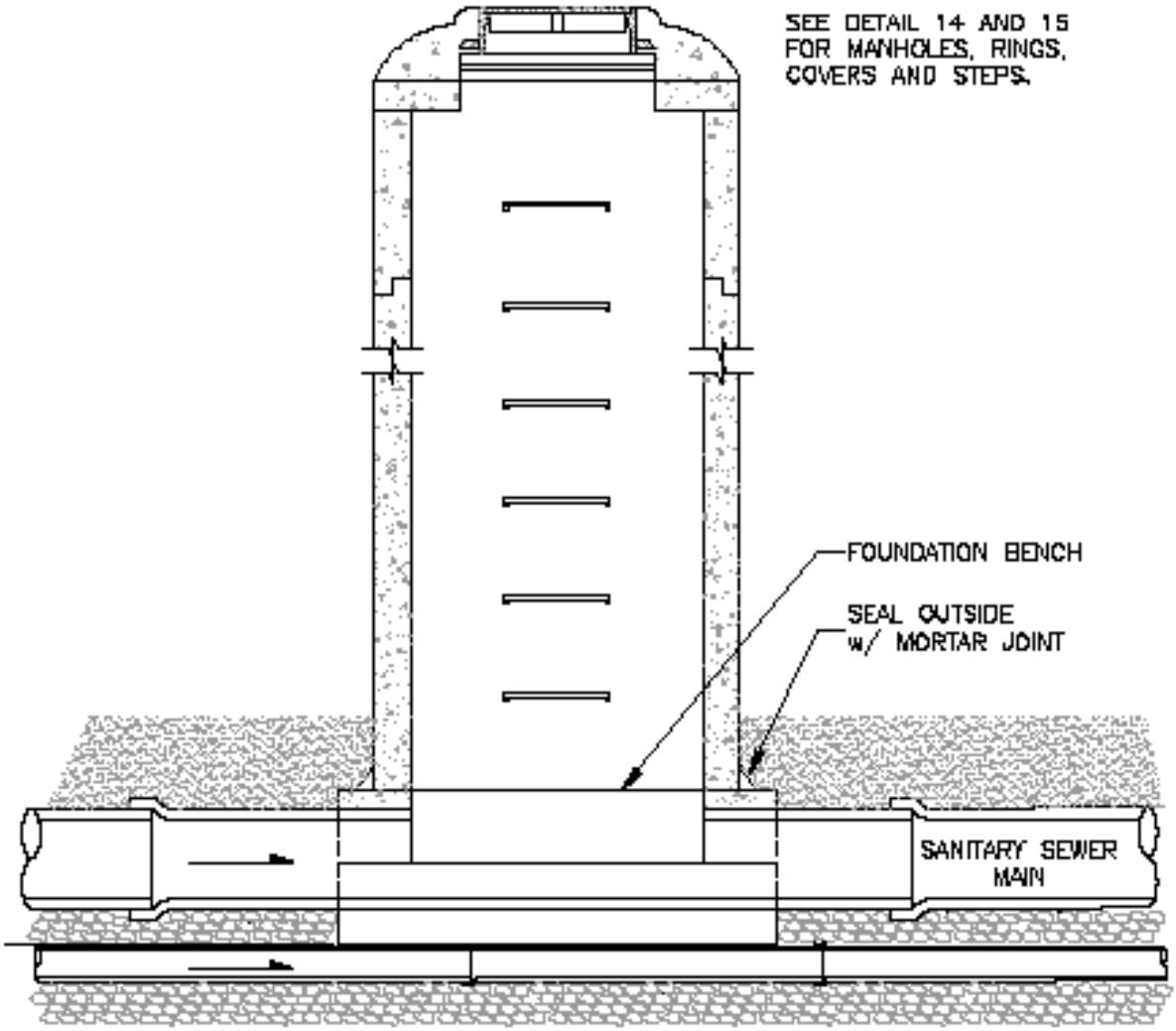

NOTES:

1. SEE PRECAST MANHOLE DETAILS FOR MANHOLE CONSTRUCTION.
2. UNDERDRAIN SHALL BE A SOLID WALL PIPE FOR A MINIMUM OF ONE LENGTH OF PIPE OR 13 FT. UPSTREAM OF THE MANHOLE.

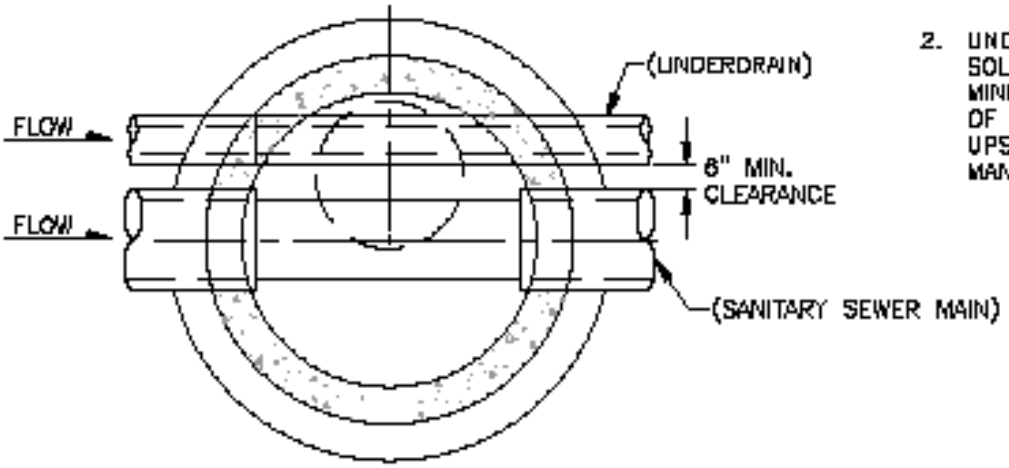

MONUMENT COLORADO

Proud of our past... Confident of our Future!

MANHOLE WITH UNDERDRAIN DETAIL

DATE: FEBRUARY 2011	SCALE: NONE	DETAIL 11
PREPARED BY: NOLTE		
JOB NUMBER CSB040012		

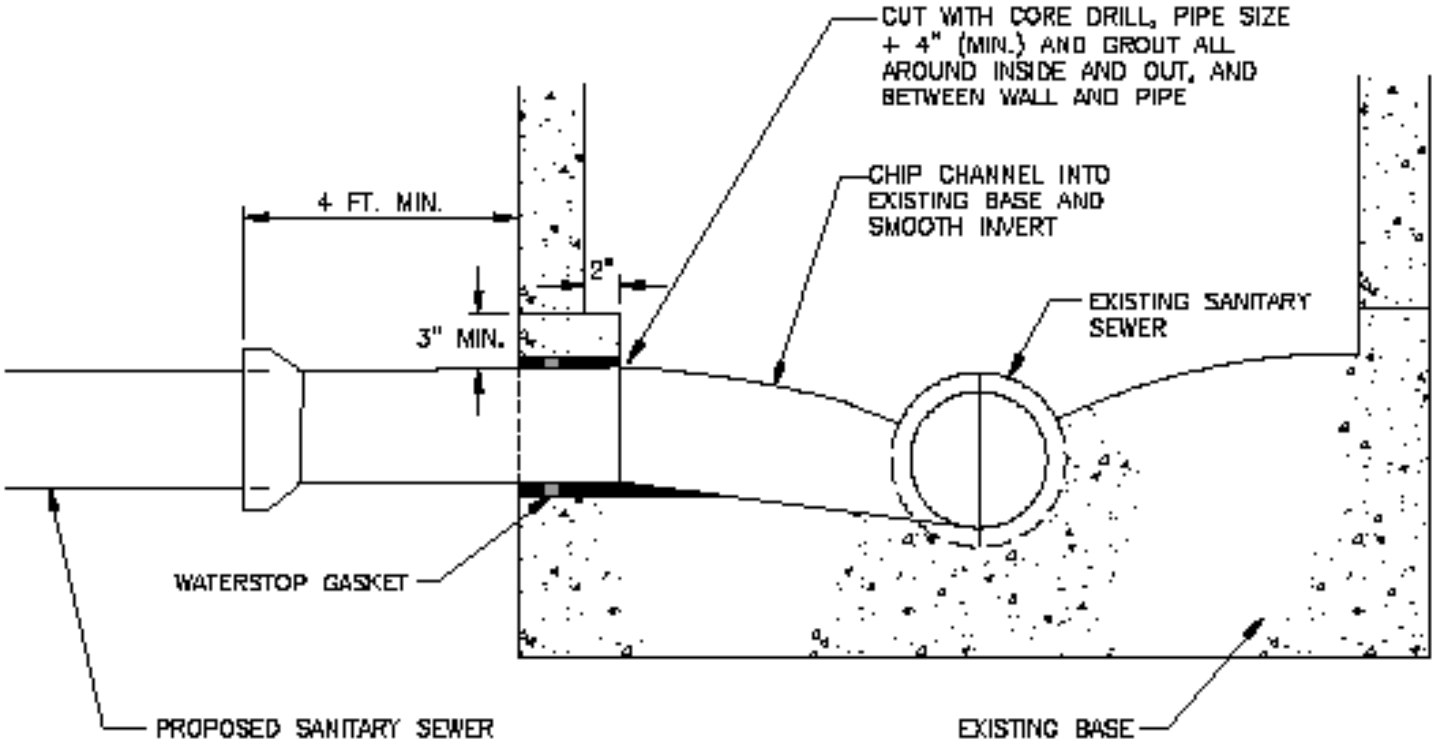

NOTES:

1. TIE-INS SHALL ONLY BE PERMITTED THROUGH BASE WALL.

MONUMENT COLORADO

Proud of our past... Confident of our future!

MANHOLE INVERT TIE-IN DETAIL

DATE: FEBRUARY 2011	SCALE: NONE	DETAIL 12
PREPARED BY: NOLTE		
JOB NUMBER CSB040012		

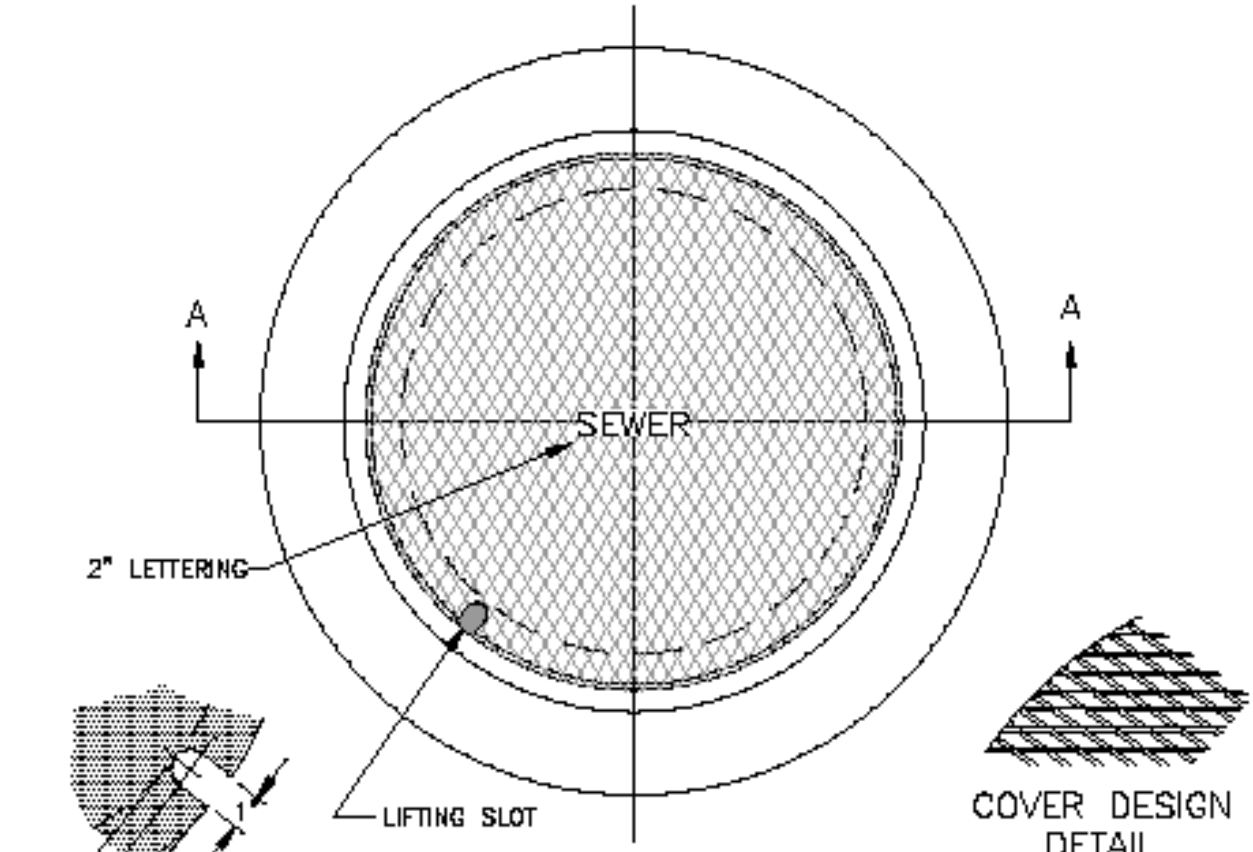

PLAN

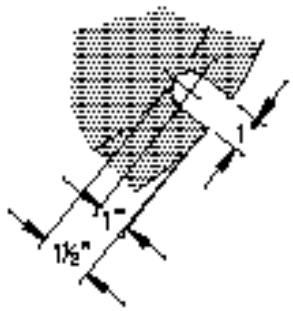

LIFTING SLOT DETAIL

COVER DESIGN DETAIL

TYPE "C" DESIGN 1"x1" SCORED 1/32"± DEEP

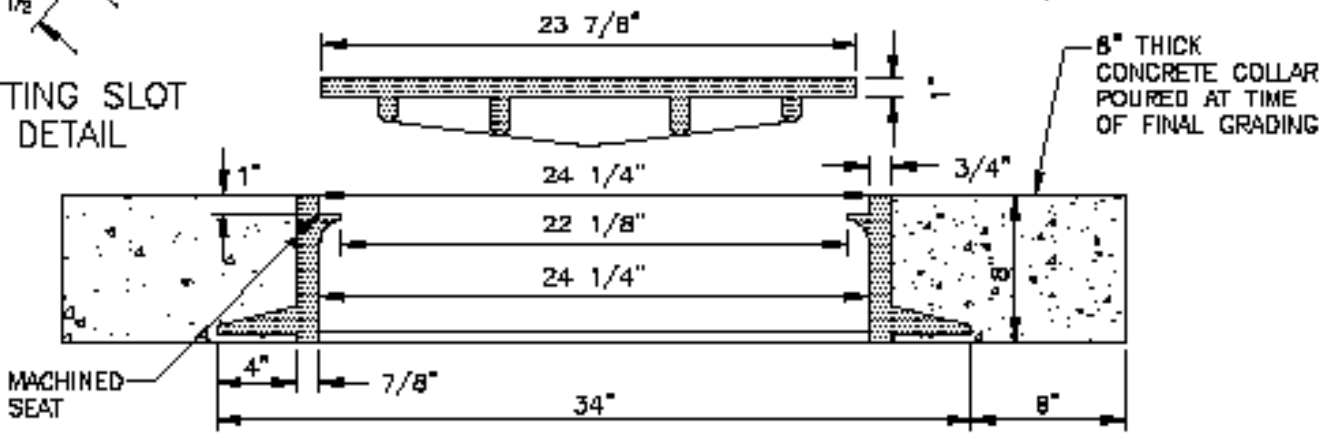

SECTION A–A

NOTES:

1. A.S.T.M. DESIGNATION A–48 CLASS 35 B (UNPAINTED).
2. LETTERING ON COVER AS REQUIRED.
3. ALL BEARING SURFACES TO BE MACHINED.
4. TOTAL MINIMUM WEIGHT APPROXIMATELY 400 LBS., CAST IRON ONLY.
5. LIFTING SLOT SHALL NOT EXTEND PAST INSIDE FACE OF RING SEAT.
6. MINIMUM FRAME WEIGHT – 235 LBS., MINIMUM LID WEIGHT – 165 LBS., NEENAH R–1706, OR EQUAL.

MONUMENT COLORADO

Proud of our past... Confident of our Future!

24" MANHOLE RING AND COVER

DATE: FEBRUARY 2011	SCALE: NONE	DETAIL 13
PREPARED BY: NOLTE ENGINEERING		
JOB NUMBER CSB040012		

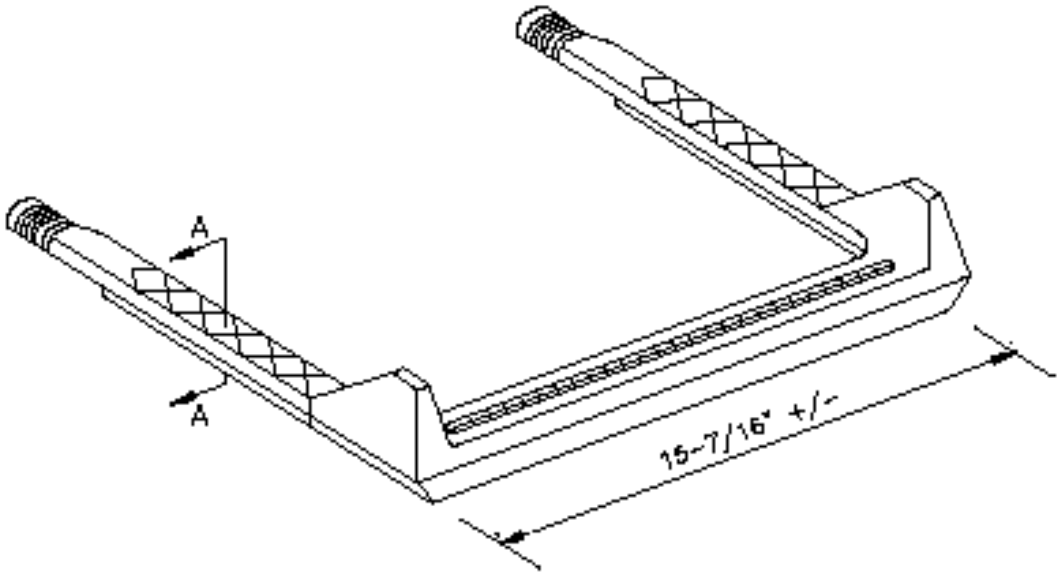

DETAIL FOR M.A. INDUSTRIES STEP

STEPS TO BE ALUMINUM (ALCOA NO. 12653-B) OR POLYPROPYLENE CONSTRUCTED OF A CO-POLYMER SHELL REINFORCED WITH A 1/2" DIAMETER STEEL ROD (GRADE 60). M.A. INDUSTRIES MODEL PS-2-PF OR APPROVED EQUAL

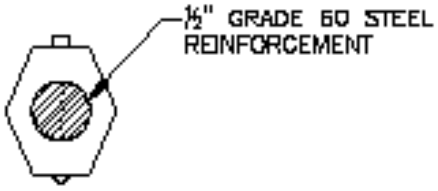

SECTION A-A

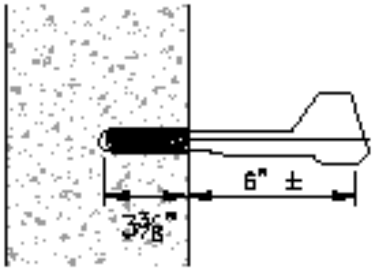

TYPICAL STEP INSTALLATION

NOTES:

1. ALL WORK SHALL BE DONE IN ACCORDANCE WITH THE STANDARD SPECIFICATIONS APPLICABLE TO THE PROJECT.
2. CAST IRON STEPS WILL NOT BE PERMITTED.

MONUMENT COLORADO

Proud of our past... Confident of our future!

STANDARD STEP FOR MANHOLES

DATE: FEBRUARY 2011	SCALE: NONE	DETAIL 14
PREPARED BY: NOLTE		
JOB NUMBER CS8040012		

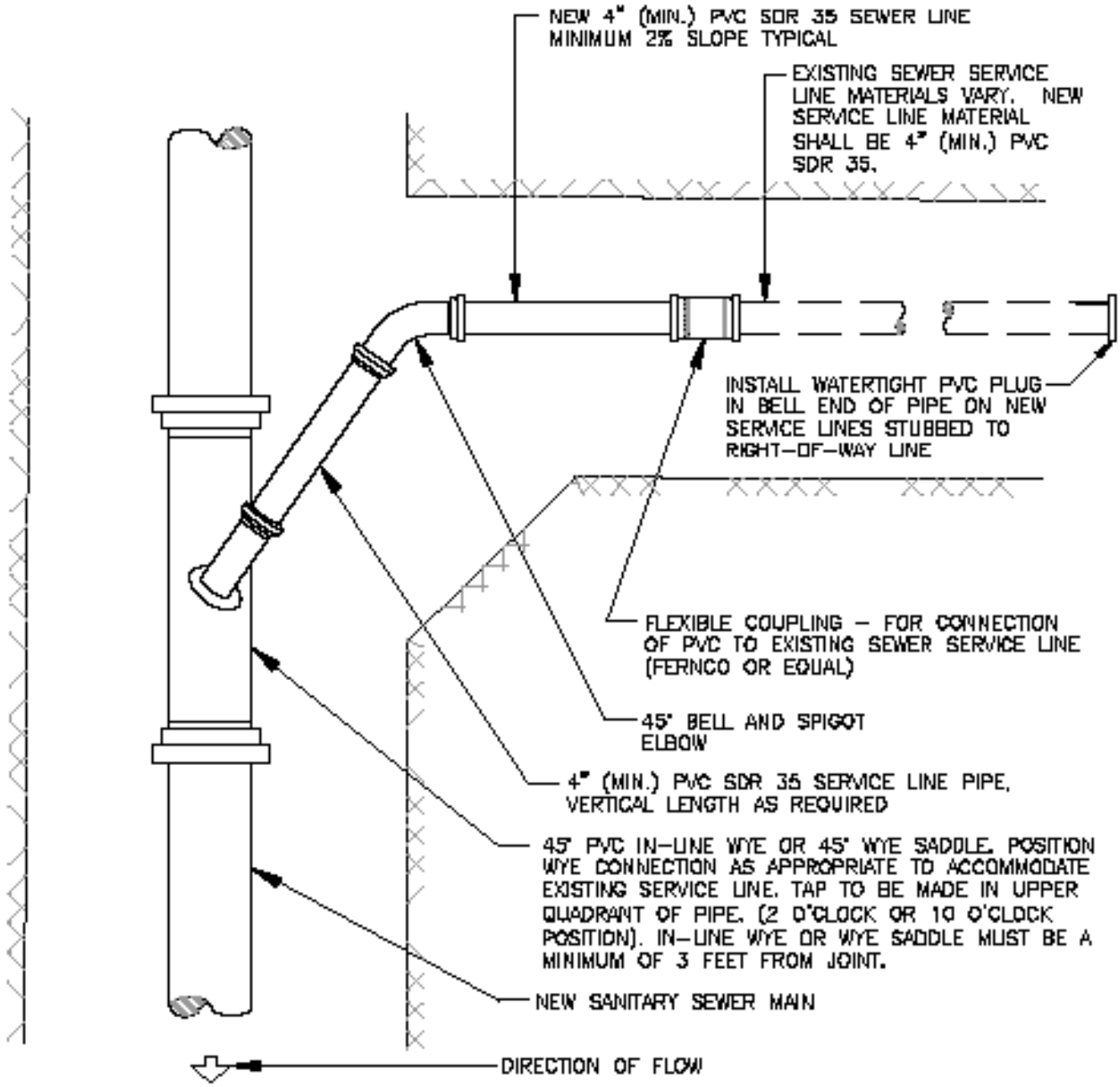

MONUMENT COLORADO

Proud of our past... Confident of our Future!

SEWER SERVICE CONNECTION DETAIL

DATE: FEBRUARY 2011	SCALE: NONE	DETAIL 15
PREPARED BY: NOLTE		
JOB NUMBER CSB040012		

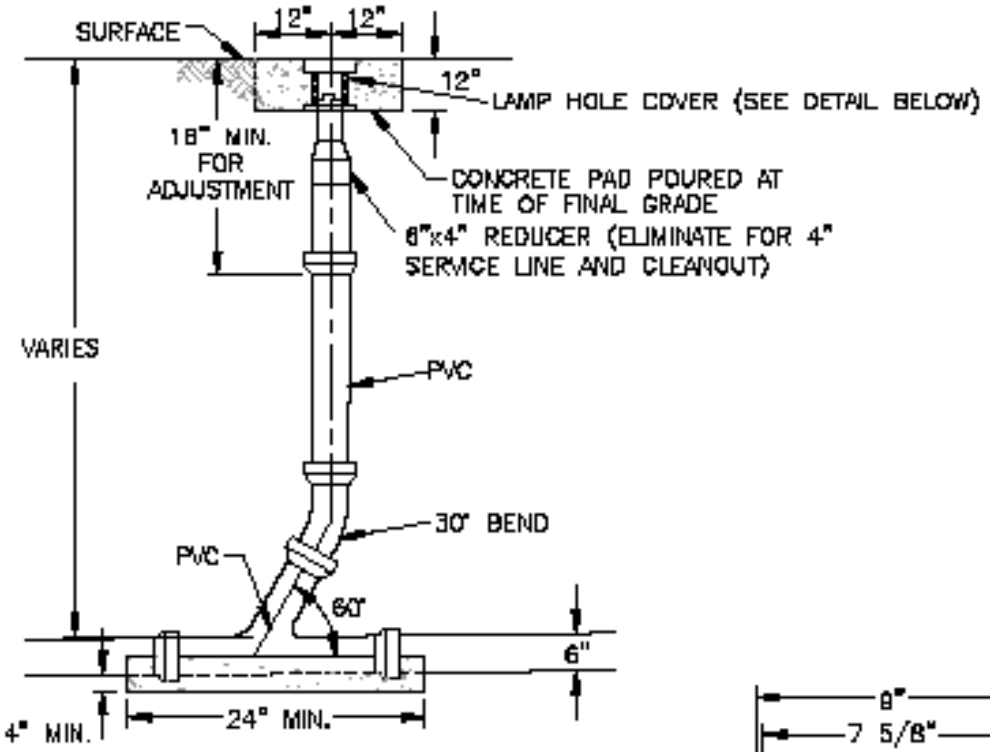

PLAN VIEW

NOTES:
1. COVER SHALL HAVE A LOCKING LID MARKED "SEWER".
2. TRAFFIC BEARING LID REQUIRED IN PAVED AREAS.
3. TYLER SERIES 6855 SLIP TYPE TOP SECTION, OR APPROVED EQUAL.

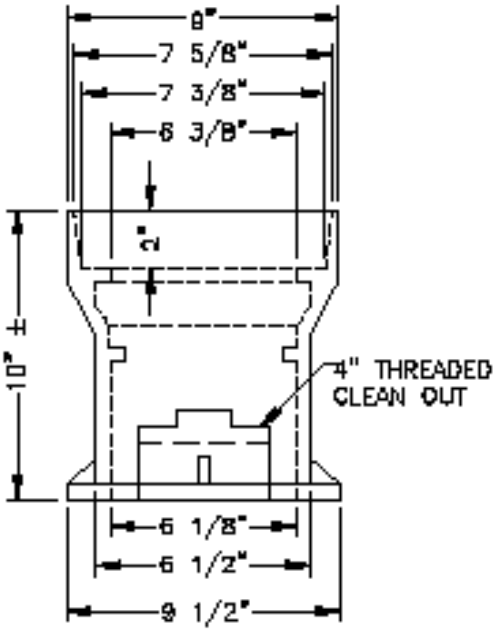

COVER DETAIL

MONUMENT COLORADO
Proud of our past... Confident of our future!

IN-LINE SANITARY SEWER CLEANOUT (4")

DATE: FEBRUARY 2011	SCALE: NONE	DETAIL 16
PREPARED BY: NOLTE ENGINEERING		
JOB NUMBER CS8040012		

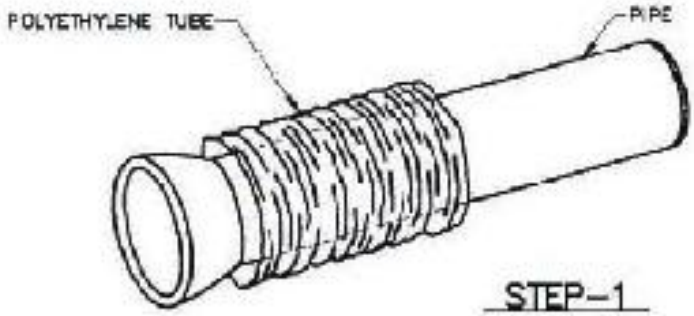

STEP-1

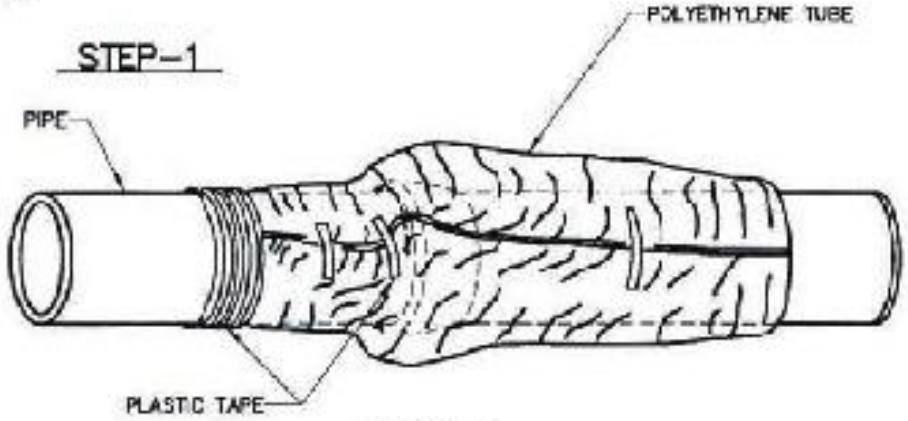

STEP-2

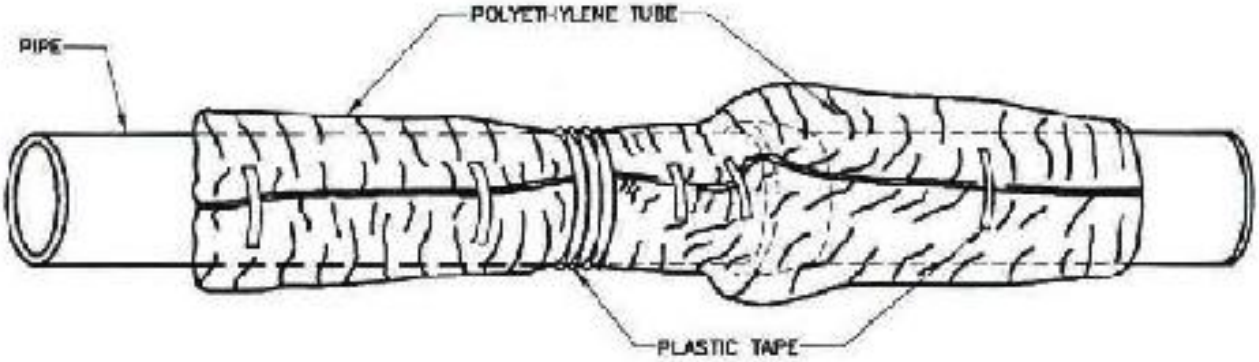

STEP-3

FIELD INSTALLATION—POLYETHYLENE WRAP

STEP-1 PLACE TUBE OF POLYETHYLENE MATERIAL AROUND PIPE PRIOR TO LOWERING PIPE INTO TRENCH.

STEP-2 PULL THE TUBE OVER THE LENGTH OF THE PIPE. TAPE TUBE TO PIPE AT JOINT. FOLD MATERIAL AROUND THE ADJACENT SPIGOT END AND WRAP WITH THREE CIRCUMFERENTIAL TURNS OF TWO-INCH WIDE PLASTIC TAPE TO HOLD PLASTIC TUBE AROUND SPIGOT END.

STEP-3 ADJACENT TUBE OVERLAPS FIRST TUBE AND IS SECURED WITH PLASTIC ADHESIVE TAPE. THE POLYETHYLENE TUBE MATERIAL COVERING THE PIPE WILL BE LOOSE. EXCESS MATERIAL SHALL BE NEATLY DRAWN UP AROUND THE PIPE BARREL, FOLDED INTO AN OVERLAP ON TOP OF THE PIPE AND HELD IN PLACE BY MEANS OF PIECES OF THE PLASTIC TAPE AT APPROXIMATELY THREE TO FIVE FT INTERVALS.
(SEE SECTION 5-4C)

2004 DRAWING FROM DENVER WATER [SHEET 38]

MONUMENT COLORADO
Proud of our past... Confident of our future!

POLYETHYLENE WRAP FOR DUCTILE IRON PIPE

DATE: FEBRUARY 2011	SCALE: NONE	DETAIL 17
PREPARED BY: NOLTE		
JOB NUMBER CSB040012		

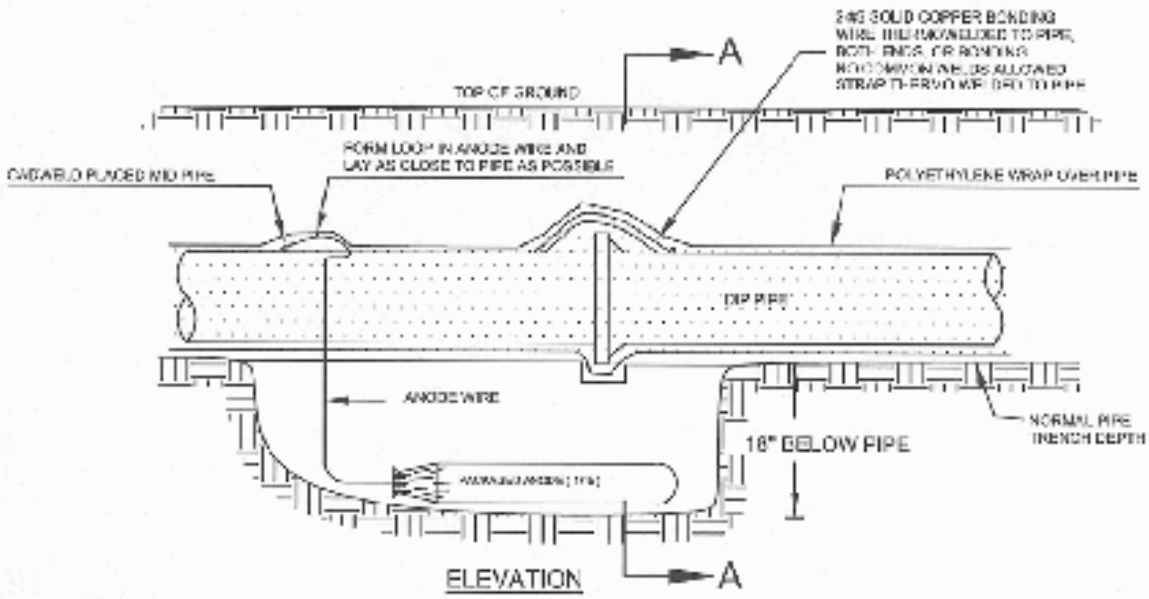

Anode Design

FOR USE WITH DIP IN CONJUNCTION WITH POLY-WRAP SLEEVES IN 1000 OHM-CM SOIL ESTIMATING A 5% HOLIDAY AREA.

Pipe Size Inches	Actual OD Inches	Anode Spacing Feet
4	4.8	783
6	6.9	531
8	9.05	405
12	13.20	277
16	16	210
20	20	169
24	24	142
30	30	114
36	36	95.7
42	42	82.4
48	48	72.1
54	54	64.2

THE DISTANCE FROM THE POINT OF THE BEGINNING TO THE FIRST ANODE SHALL NOT EXCEED ONE HALF THE RECOMMENDED SPACING. WITH TOWN APPROVAL.

NOTE: TRENCHING OPERATIONS SHALL BE IN CONFORMANCE WITH THESE STANDARDS AND OSHA REGULATIONS.

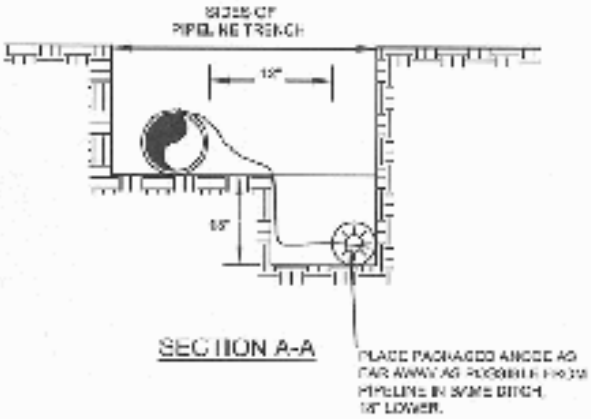

NOTES:

1. **CADWELD CONNECTION TO BE PRIMED AND COATED CAREFULLY. PACKED ANODE SHOULD BE COVERED WITH FINE SOIL CONTAINING NO ROCKS OR DIRT CLUMPS, TAMPED.**
2. **WHEN ANODES ARE REQUIRED WITH METAL FITTINGS AND APPURTENANCES TOGETHER WITH PVC PIPE INSTALLATIONS, THE ANODES SHALL BE PLACED AND ATTACHED TO THE METAL FITTINGS IN THE SAME MANNER AS SHOWN IN THIS DRAWING. REFER TO SUBSECTION 4-3.R.**
3. **PACKAGED ANODE TO BE WETTED AND COVERED WITH SOIL PRIOR TO BACKFILLING.**

2007 MODIFIED DRAWING FROM COLORADO SPRINGS UTILITIES [DETAIL A5-2]

MONUMENT COLORADO
Proud of our past... Confident of our future!

BONDING JOINT AND ANODE INSTALLATION

DATE: FEBRUARY 2011	SCALE: NONE	DETAIL 18

PREPARED BY: NOLTE

JOB NUMBER CS8040012

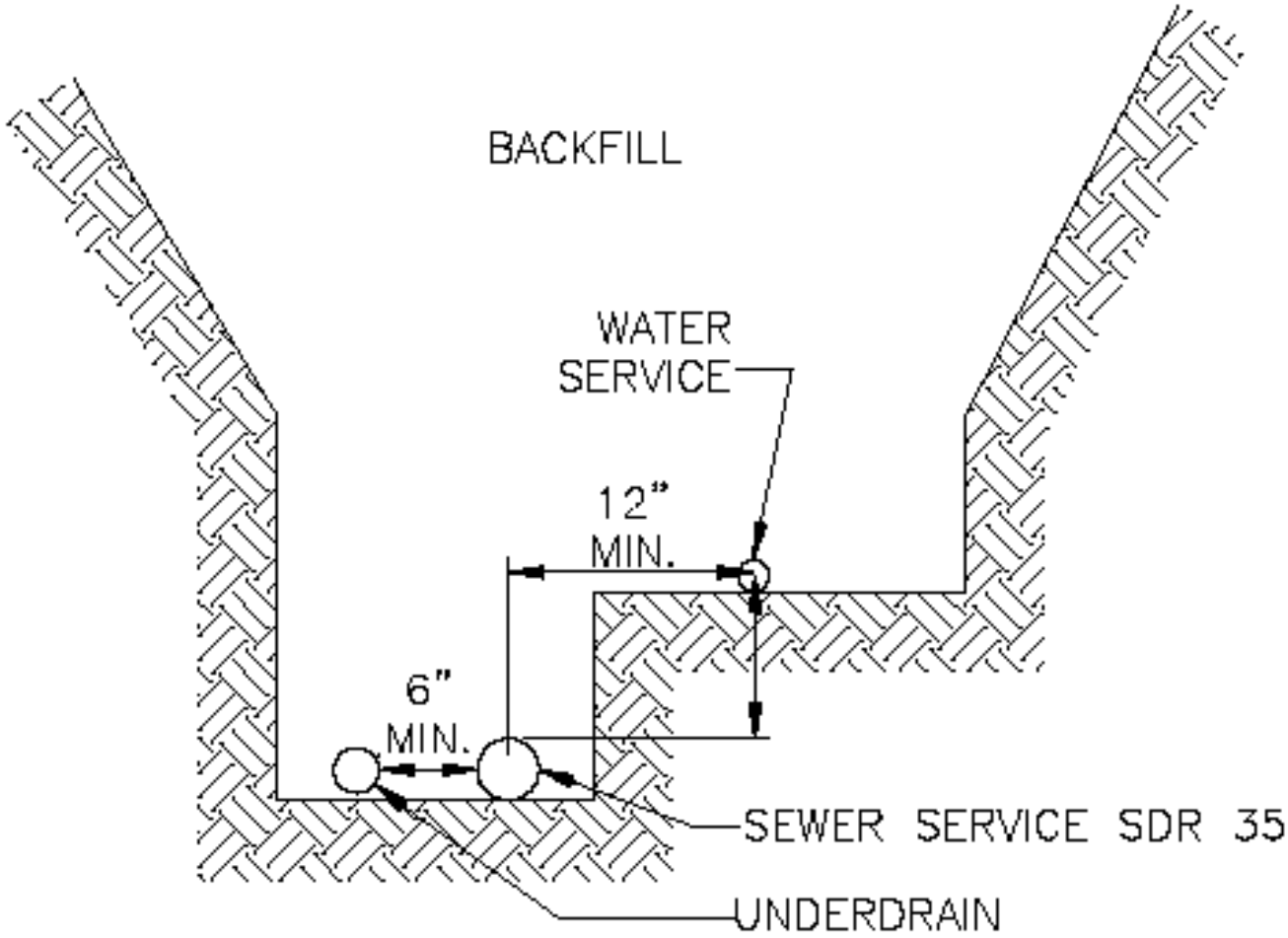

MONUMENT COLORADO
Proud of our past... Confident of our future!

TYPICAL COMMON SERVICE TRENCH SECTION

DATE: FEBRUARY 2011	SCALE: NONE	DETAIL 19
PREPARED BY: NOLTE ENGINEERING		
JOB NUMBER CSB040012		

NOTES:

1. MINIMUM SIZE = 1000 GALLONS
2. CONCRETE = 28 DAY COMPRESSIVE STRENGTH = 4000 psi
3. DESIGN: ASTM C857-87 & C858-83 MINIMUM
4. LOADING: AASHTO HS-20
5. FILL w/ CLEAN WATER PRIOR TO START-UP OF SYSTEM

SIZING CHART				
GALLON CAPACITY	DIM "A"	DIM "B"	DIM "C"	DIM "D"
1000	8'-0"	5'-8"	7'-2"	4'-4"
1500	9'-0"	5'-8"	7'-2"	4'-4"
1750	11'-2"	5'-8"	7'-2"	4'-11"
2000	11'-2"	6'-8"	8'-0"	4'-7"
2500	12'-8"	6'-8"	9'-0"	5'-6"
2750	12'-8"	6'-8"	9'-0"	6'-0"
3000	14'-7"	9'-7"	9'-6.5"	5'-3"
4000	15'-7"	9'-7"	9'-6.5"	6'-3"
5000	18'-11"	9'-11"	9'-11"	6'-2"
6000	19'-11"	9'-11"	10'-5"	7'-2"

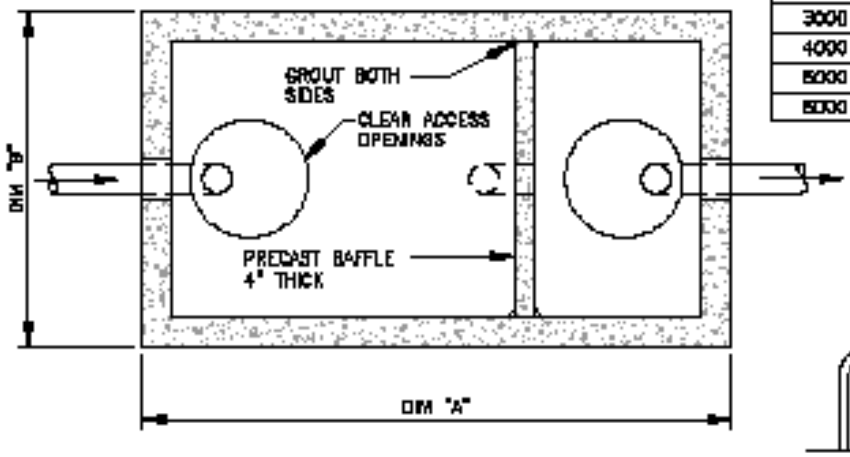

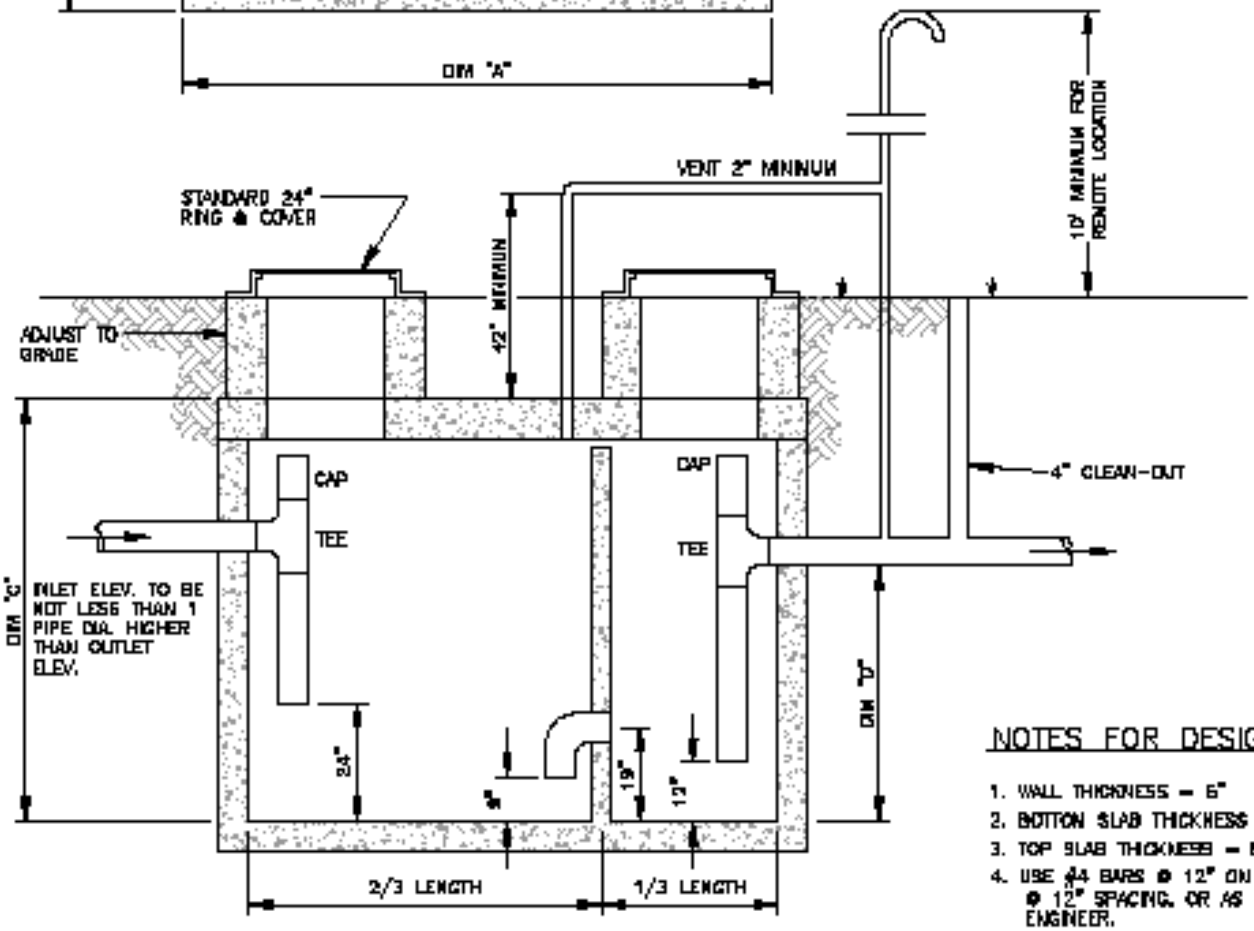

NOTES FOR DESIGN:

1. WALL THICKNESS = 6"
2. BOTTOM SLAB THICKNESS = 6"
3. TOP SLAB THICKNESS = 6"
4. USE #4 BARS @ 12" ON CENTER WITH #3 TIES @ 12" SPACING, OR AS SPECIFIED BY ENGINEER.

MONUMENT COLORADO
Proud of our past... Confident of our future!

GREASE INTERCEPTOR

DATE: FEBRUARY 2011

SCALE: NONE

PREPARED BY: NOLTE ASSOCIATES

JOB NUMBER CS8040012

DETAIL 20

NOTES:

1. MINIMUM SIZE = 500 GALLON
2. CONCRETE = 28 DAY COMPRESSIVE STRENGTH = 4000 psi
3. DESIGN: ASTM C857–87 & C858–83 MINIMUM
4. LOADING: AASHTO HS–20
5. FILL w/ CLEAN WATER PRIOR TO START–UP OF SYSTEM

SIZING CHART						
GALLON CAPACITY	DIM "A"	DIM "B"	DIM "C"	DIM "D"	DIM "E"	DIM "F"
500	6'–0"	4'–0"	3'–0"	3'–2"	4'–0"	2'–6"
750	8'–0"	4'–0"	5'–0"	5'–2"	6'–0"	4'–0"
1000	8'–0"	4'–0"	6'–0"	6'–2"	7'–0"	5'–0"
1250	8'–0"	4'–0"	5'–3"	5'–5"	6'–6"	4'–3"
1500	8'–0"	4'–0"	5'–2"	6'–4"	7'–0"	5'–2"
1800	11'–0"	4'–0"	5'–6"	5'–8"	7'–0"	4'–6"
2000	12'–6"	6'–0"	4'–0"	4'–2"	5'–0"	3'–0"
2500	12'–6"	6'–0"	5'–0"	5'–2"	6'–0"	4'–0"
3000	12'–6"	6'–0"	6'–0"	6'–2"	7'–0"	5'–0"
3500	15'–0"	6'–0"	4'–0"	4'–2"	5'–0"	3'–0"
5000	16'–0"	6'–0"	5'–6"	5'–8"	7'–0"	4'–6"
6500	18'–0"	6'–0"	6'–0"	6'–2"	7'–0"	5'–0"

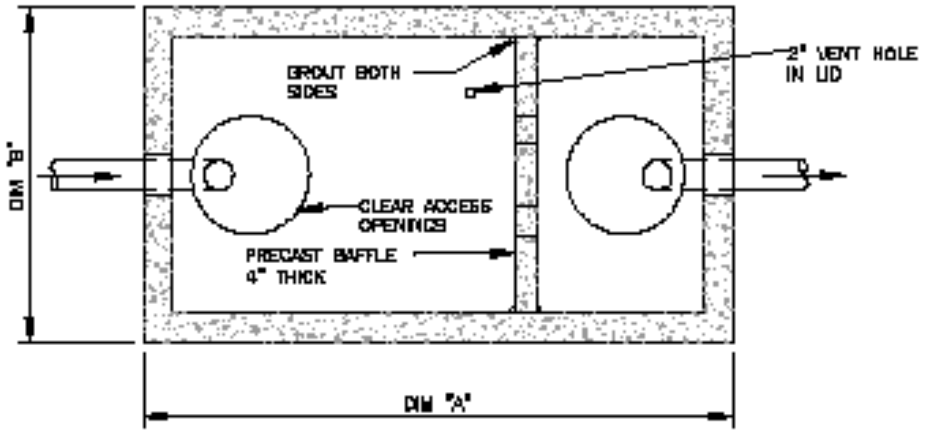

NOTES FOR DESIGN:

1. WALL THICKNESS = 6"
2. BOTTOM SLAB THICKNESS = 6"
3. TOP SLAB THICKNESS = 6"
4. USE #4 BARS @ 12" ON CENTER W/ #3 TIES @ 12" SPACING, OR AS SPECIFIED BY ENGINEER.

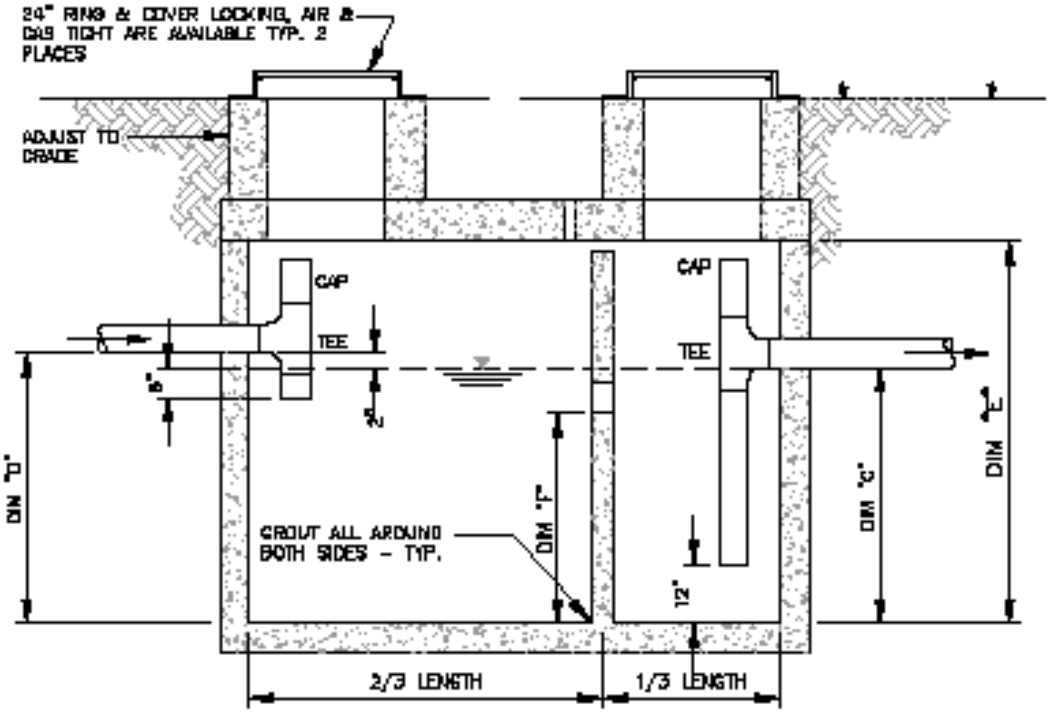

MONUMENT COLORADO

Proud of our past... Confident of our future!

SAND/OIL INTERCEPTOR

DATE: FEBRUARY 2011

SCALE: NONE

PREPARED BY: NOLTE

JOB NUMBER CS8040012

DETAIL 21

NOTES:

1. IF TOP OF INTERCEPTOR IS 24" OR LESS BELOW FINISHED GRADE, CONCRETE GRADE RINGS MAY BE USED TO BRING THE RING AND COVER TO FINISHED GRADE. A MAXIMUM OF THREE 2" GRADE RINGS WILL BE ALLOWED. FOR DEPTHS GREATER THAN 24", 4" MANHOLE BARREL SECTIONS SHALL BE USED WITH FLAT TOP.
2. SPECIFIC SIZE OF THE GREASE INTERCEPTOR TO BE APPROVED BY THE TOWN OF MONUMENT.
3. INTERIOR PIPING TO BE STRAPPED AT BOTTOM WITH GALVANIZED CLAMPS, UNISTRUT OR EQUAL.

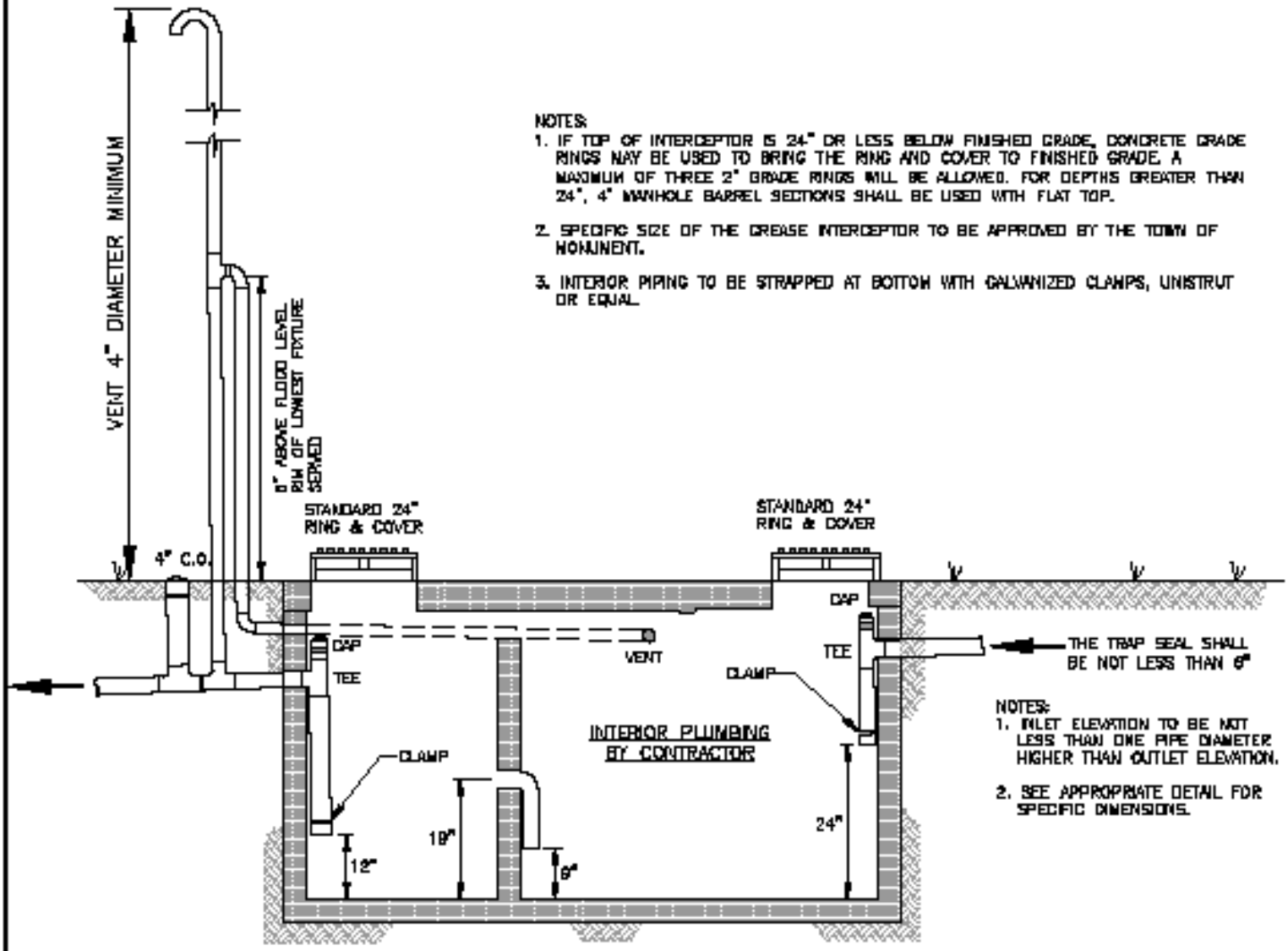

NOTES:

1. INLET ELEVATION TO BE NOT LESS THAN ONE PIPE DIAMETER HIGHER THAN OUTLET ELEVATION.
2. SEE APPROPRIATE DETAIL FOR SPECIFIC DIMENSIONS.

MONUMENT COLORADO

Proud of our past... Confident of our future!

TYPICAL RESTAURANT GREASE & SAND/OIL INTERCEPTOR (REMOTE LOCATION)

DATE: FEBRUARY 2011	SCALE: NONE	DETAIL 22

PREPARED BY: NOLTE

JOB NUMBER CS8040012