# SECTION 4

# STORM DRAINAGE AND EROSION CONTROL

## SECTION 4

## STORM DRAINAGE AND EROSION CONTROL

## TABLE OF CONTENTS


Page

**Subsection 1 - Storm Drainage and Erosion Control** ..... 1
- 1-1 Storm Drainage Provided ..... 1
- 1-2 Effects of Surface Runoff Provided ..... 1
- 1-3 Lot Drainage ..... 1
- 1-4 Erosion Control Plan ..... 1
- 1-5 Erosion Control Specifications ..... 1
- 1-6 Guidelines for Erosion Control ..... 4
- 1-7 Design and Construction Requirements for Drainage Improvements ..... 9

APPENDIX A - Standard Drainage Details (City of Colorado Springs)

| | |
|---|---|
| D-9 | Grated Inlet |
| D-10-R | Standard Design Curb Inlet |
| D-11 a,b | Standard Design Radial Inlets |
| D-12 | Riprap Channel |
| D-13 | Weep Hole Detail |
| D-14 | Concrete Channel Detail |
| D-15 | Expansion Joint Detail (concrete channels) |
| D-19 | Special Design Curb Inlet Detail* |
| D-20 a,b,c,d | Storm Sewer Manholes and Covers |
| D-21 | Curb Opening (drainage chase section) |
| D-26 | Metal Culvert Pipe |
| D-27 | Structural Plate Culvert Pipe |
| D-28 | Concrete Metal End Sections |
| D-29 | Headwall for Pipe Culverts |
| D-30 | Trench Bedding Classification - Round Precast Concrete Pipe |
| D-31 | Trench Bedding Classification - Precast Concrete Sections |
| D-32 | Trench Bedding for Flexible Pipe |
| D-33 | Single Concrete Box Culvert |
| D-34 | Double Concrete Box Culvert |
| D-35 | Triple Concrete Box Culvert |
| D-36 | Wingwalls for Pipe or Box Culverts |
| T-1 | Storm Sewer Outfall Basin |
| | Excerpts from the Drainage Criteria Manual |


*NOTE: Not to be used unless prior approval is obtained from the District Engineer on a site-by-site basis. (Ref. Drawing No. D-19)

## SUBSECTION 1

## STORM DRAINAGE AND EROSION CONTROL

### 1-1 Storm Drainage Provided

Storm drainage shall be provided for the development by the developer based on plans submitted by him to the District Manager and approved by the District Engineer. Design standards shall be in accordance with the TMD Master Drainage Study which is similar to a Drainage Basin Planning Study (DBPS), and applicable sections of the City of Colorado Springs/El Paso County Drainage Manual. The developer shall install all storm drainage improvements (the developer shall also comply with the Town of Monument's Flood Plain Ordinance). The TMD Master Drainage Study will control the drainage concept of proposed improvements within the District. Section 4, Appendix A, contains Standard Drainage Details which are applicable to storm drainage improvements within TMD. Storm inlet protection should provide safeguards against entry by small children and animals. Grates shall be provided only at the inlet ends of drainage pipes.

### 1-2 Effects of Surface Runoff Provided

Development Plan/Preliminary Plat must address the effects of surface runoff on the proposed development/subdivision. This should cover the approximate size of the drainage basins with a map on 1:24,000 U.S.G.S. scale, approximate size of proposed structures and method of handling on-and off-site drainage waters.

A map incorporating the Jackson Creek coordinate system is available from the District Engineer.

### 1-3 Lot Drainage

The developer shall ensure that all lots drain away from the proposed site of residential or other structures, and that such drainage not interfere with other structures in adjoining developments or other lots in the subdivision.

### 1-4 Erosion Control Plan

All cuts, fills and other areas disturbed during construction shall be treated to prevent erosion, whether by planting or other methods, according to an approved erosion control plan. The subdivider shall prepare said plan and submit it to the District Engineer for evaluation and approval (see Section 1-6 Erosion Control Guidelines).

### 1-5 Erosion Control Specifications

a. General Principles - The required erosion control plan is a plan for controlling erosion during construction in compliance with applicable laws, ordinances, regulations, resolutions, standards, and specifications.

This plan shall be a part of the total site development plan and prescribe the steps necessary including scheduling to assure erosion control during all phases of construction including final stabilization.

b. Preliminary Drainage Report - Planning for erosion control shall begin with the Preliminary Drainage Report to be submitted with the Development Plan and shall include first-hand knowledge of the site by the development engineer.

(1) The plan shall be based on a sufficiently accurate topographic map.

(2) Adjacent offsite areas affecting the site or affected by the site as developed shall be shown on the plans in sufficient detail to identify conditions. Examples of this are areas draining onto the site or areas where storm runoff leaves the site and travels to a stream or public drainage system.

(3) The erosion control plan shall consist of the best selection of erosion control practices and sediment trapping facilities in conjunction with an appropriate implementation schedule to accomplish adequate control. Adequate erosion control measures shall be constructed prior to land-disturbing activities such that no adverse effect of site alteration will impact surrounding properties.

(4) Particular attention shall be given to concentrated flows of water, either to prevent their occurrence or to provide appropriate conveyance devices to prevent erosion.

(5) Sediment trapping devices shall be required at a point where sediment-laden water might leave the site.

(6) The plan must include permanent structures for conveying storm runoff, final site stabilization, temporary erosion control features including sediment basins, and finally, stabilization of the site where temporary features have been removed.

(7) Plans showing improvements or construction to be completed outside the property line of the site will not be approved unless the plan is accompanied by an appropriate legal easement of the area in which such work is required.

(8) Statements or copies of permit submissions shall be provided documenting compliance with state requirements for non-point source pollution prevention, and county requirements for fugitive dust control.

(9) The plan will take into account the federal mandate to protect against destruction of threatened or endangered species and their habitats.

c. Plan Standards - The plan shall be annotated with appropriate symbols as shown on the List of Standard Symbols. The symbols should be bold and tend to "stand out" on the plans. See Section 1-6. Unless otherwise approved, one of the following scales shall be used for the erosion control plan: 1" = 20'; 1" = 30'; 1" = 40'; or 1" = 50'. The contour interval for these plans shall be two feet or closer.

d. Information to be included in the Erosion Control Plan - The plan shall provide the following information for the entire tract of land to be disturbed whether or not the tract will be developed in stages:

(1) A vicinity map indicating the proposed development in relationship to roadways, jurisdictional boundaries and streams.

(2) A site plan showing soil types, existing and proposed contours, existing vegetation, existing and proposed water courses, critical erosion areas, adjacent existing and proposed development affected, and the proposed features of the site.

(3) A plan for temporary and permanent vegetative and structural controls which specify the conservation measures to be used during all phases of clearing, grading, filling, construction, and permanent development.

(4) A schedule of anticipated starting and completion dates for each sequence and stage of land-disturbing activity depicting conservation measures anticipated including the expected date on which the final stabilization will be completed.

(5) All plats, maps, or other drawings submitted for this site shall be compatible with the erosion control plan as approved.

e. Additional Information Requirements - Additional data may be required for all projects where the Triview Metropolitan District deems that soil erosion control problems exist. Such data as specified by the District in writing may include, but not be limited to:

(1) A detailed description of the maintenance program for erosion control facilities including inspection programs, vegetation establishment on exposed soils, method and frequency of removal

and disposal of waste materials from control facilities, and disposition of temporary structural measures.

(2) Soil borings and tests.

(3) Other engineering studies, computations, schedules, and supportive data deemed necessary by the District.

(4) After reviewing the proposed plan and additional information, if required, the District shall approve the plan if it is found to be adequate to control erosion for the site.

f. Scope and Exclusions - This criteria shall apply to any land-disturbing activity undertaken by any person on any lands, except minor land-disturbing activities such as individual home landscaping and gardening, maintenance and repair work, and those land-disturbing activities which in the judgment of the District as set forth in writing, will not result in significant soil erosion or the movement of significant sediment into waters or onto lands off the project site.

g. Plan Implementation - Prior to construction, the Erosion Control Plan must have the required approval signatures of the District Manager or his/her representative in the appropriate space provided on the plan, and show proof of any required dust control permit. No clearing, grading, excavation, filling, or other land-disturbing activities shall be permitted until approval of the Erosion Control Plan is received from the District. Once approval is received, approved conservation measures must be installed before land-disturbing activities are initiated such that no adverse effect of the site alteration will impact surrounding property. These conservation measures shall apply to all features of the construction site including, but not limited to, street and utility installations, as well as to the protection of individual lots. During all phases of construction, it shall be the responsibility of those initiating such land-disturbing activities to maintain all erosion control features in a functional manner.

## 1-6 Guidelines for Erosion Control

The objectives of erosion control design are to prevent damage to adjacent properties due to sediment, dust, or storm water runoff from the construction site; and to minimize the onsite effects of erosion; e.g., undermined curbs and gutters, gullying, sedimentation in storm sewers, or natural drainages.

a. Basic Principles - Erosion occurs when water or wind acts upon unprotected soil to detach, transport, and deposit soil particles. Five generalized factors are involved in water erosion (sediment generation) - climate, soil erodibility, slope gradient, length of slope, and surface cover. Of these, the

cover factor is the easiest to control, followed by the length of slope. Essentially, the same factors apply to wind erosion (dust blowing).

There are three stages in the erosion process. Controls may be applied to any of these three stages, but preferably all three stages will be addressed. They are as follows:

(1) Detachment Stage

(2) Transport Stage

(3) Deposition Stage

In most situations it may be least expensive to control erosion in the first or detachment stage. Examples of control during detachment include phased grading, which limits the amount of soil exposed at any one time, mulches, seedings, or these methods which will limit the power of water or wind to detach soil.

Control during the second or transport stage must disrupt or control the flow of water (slow-moving water is less able to carry sediment or detach soil in the first place). This may be accomplished by installing diversion ditches on slopes using filter strips, silt fences, and straw bale barriers throughout the drainage system and using temporary or permanent slope drainage to convey water safely down slopes. Streets can act as diversions as long as effective protection of storm drainage inlets is provided.

Control in the final or deposition stage also means interrupting transport of sediment, but is applied at drainage outlets or at property boundaries rather than throughout the project. Sediment traps are the primary structures - debris basins, over-excavated detention ponds, straw bales or silt fences at outlets and/or property lines, etc. NOTE: Silt fences are not suitable for concentrated or channelized flow situations and should only be used where sheet and rill erosion occurs.

While the following information deals mainly with water erosion, many of the practices (especially the non-structural methods) are also beneficial for controlling wind erosion.

b. Control During Grading - There are operational procedures that can reduce the amount of erosion that occurs during construction. Phased grading is the best place to start - limiting activity to one relatively small area that can be graded, developed, and landscaped before beginning a new area. In terms of "large equipment use efficiency", phasing is not always economically feasible. If the entire site is graded at one time, but construction is expected

to last several months or years, use one of the following vegetative procedures outlined below.

Other erosion and sediment control procedures include staying away from creek/drainage banks and leaving a filter strip of natural vegetation on the shoulders, not using drainageways as roadways (tire tracks provide a channel for water that can lead rapidly to gullying), and using a "stabilized construction entrance".

c. Non-Structural Erosion Control Methods

(1) Mulch - Mulching may be accomplished by the crimping method using straw or hay, or by the hydraulic method using wood cellulose fiber mulch, or by other material or methods approved by the District Manager. A mulch layer provides soil stabilization for a relatively short period of time - usually a few weeks to six months.

An effective mulch consists of 4,000 pounds of long stemmed (10" or more) weed and seed free straw or hay applied per acre or an equivalent amount of other materials such as wood chips, grass and leaf clippings, etc. Erosion control fabrics, including excelsior mats and jute netting, are suitable too.

All mulches must be anchored to the soil. Crimping is usually used for straw or hay, Jute netting placed and pinned over the straw is also very effective for small areas where equipment is difficult to use. Fabrics are typically anchored with pins.

A mulch must always follow a seeding for at least two reasons - it reduces, or even prevents, erosion during the establishment period and it greatly increases the chance of success for non-irrigated seedings by holding moisture in the soil.

(2) Temporary Seeding - Application of seeding and mulch shall be per the Soil Conservation Service Standards. Seeding rates and types shall be as follows:

| **Transition Turf Mix** | |
|---|---|
| Smooth Brome | 50% |
| Perennial Rye | 20% |
| Tall Fescue | 20% |
| Canadian Blue | 10% |

Spread Rate 25 lbs PLS/acre

**Low Grow**

| | |
|---|---|
| Ephriam Crested Wheat | 30% |
| Dwarf Perennial Rye | 25% |
| Canadian Blue | 15% |
| SR 3200 Blue Fescue | 20% |
| Chewing Fescue | 10% |

Spread Rate 25 lbs PLS/acre

A temporary seeding (plus mulch) is the preferred erosion control method on sites that will be exposed and inactive for approximately six months to one year.

Irrigation expands seeding opportunities. Most grasses can be seeded at anytime during the growing season with irrigation. Exceptions, for grasses, include forage sorghum, sundangrass, and millet - they require warm soil for germination and are, therefore, restricted to summer use.

An added benefit with temporary seeding is a neutral background for weed control. Noxious weeds tend to dominate a disturbed site which eventually become a maintenance problem for future owners. The weeds also produce seeds which are easily transported off-site, adversely affecting neighboring property, especially open space. Weed control in a temporary seeding generally means mowing weedy areas to maintain about a six inch height. If the weeds persist, herbicides may be used as the grass approaches maturity.

A mulch could also be used for protection for six months to a year, but it will need to be reapplied since it is biodegradable.

(3) "Permanent" Seeding - Application of seeding and mulch shall be per the Soil Conservation Service Standards. Seeding rates and types shall be as follows:

There are several aspects to "permanent" seeding as used for erosion control. It may be temporary, in that protection is provided for a year, or more, before replacement with landscaping plant materials. It also may be truly permanent, a part of the landscape plan.

The purpose of this seeding will determine which grasses are used. A "natural" area, which will not be maintained or irrigated, will require different grasses than the bottom of a detention pond that will be moist and frequently flooded. If irrigation is provided, the grass selection will rely more on introduced grasses than on native species.

A permanent seeding is site-specific, a function of intended use, maintenance, site conditions, etc.

d. Structural Erosion Control Methods

(1) Temporary Erosion Control Methods - A gravel pad, located at points of vehicular ingress and egress on a construction site, to reduce mud transported onto public roads and other paved areas.

(2) Construction Road Stabilization - Temporary stabilization with stone of access roads, subdivision streets, parking areas, and other traffic areas immediately after grading to reduce erosion caused by vehicles during wet weather, and to prevent having to regrade permanent roadbeds between initial grading and final stabilization.

(3) Straw Bale Barriers - A temporary sediment barrier composed of straw or hay bales properly placed and anchored across or at the toe of a slope or in a minor drainageway to intercept and detain sediment and decrease flow velocities from drainage areas of limited size; applicable where sheet and rill erosion from low-to-moderate channel flows may be a problem.

(4) Silt Fence - A temporary sediment barrier constructed of posts, filter fabric and, in some cases, a wire support fence, placed across or at the toe of a slope or in a minor drainageway to intercept and detain sediment and decrease flow velocities from drainage areas of limited size; applicable where sheet and rill erosion or small concentrated flows may be a problem.

(5) Storm Drain Inlet Protection - The installation of various kinds of sediment trapping measures around drop inlet or curb inlet structures prior to permanent stabilization of the disturbed area. Examples include block and gravel, gravel and filter fabric, gravel and wire mesh, and straw bales and filter fabrics.

(6) Diversions - A temporary or permanent channel with a supporting ridge on the lower side, installed across the slope, used to divert runoff away from slopes to a protected, stabilized outlet, or to carry sediment-laden runoff to traps or filters.

(7) Sediment Traps - A temporary or permanent structure designed to detain sediment-laden water long enough to cause sediment deposition. They may be as simple as earthen embankments placed across a small drainage swale and equipped with a gravel filter outlet, or they may be larger ponds with structures to regulate the release of stormwater.

(8) Slope Drains - The intent is to conduct concentrated runoff from the top to the bottom of a slope without causing erosion. Temporary structures include the use of flexible tubing or conduit. Permanent conveyance may be in a concrete-lined "chute" or flume.

(9) Outlet Protection - The installation of paved and/or rip-rap channel sections and/or stilling basins below storm drain outlets to reduce erosion from scouring at outlets and to reduce flow velocities before stormwater enters receiving channels below these outlets.

(10) Rip-rap - A permanent, erosion-resistant ground cover of large, loose, angular stone installed wherever soil conditions, water turbulence and velocity, expected vegetative cover, etc., are such that soil may erode under design flow conditions. It must include a gravel blanket placed below the rock.

(11) Grade Control Structure - Provides temporary protection with properly designed and installed check dams; used in small open channels, not live streams. Permanent protection may be provided with drop structures. Both operate by reducing the velocity of concentrated flow.

(12) Level Spreader - An outlet for dikes and diversions consisting of an excavated depression constructed at zero grade across a slope to convert concentrated, sediment-free runoff to sheet flow and release it onto areas of undisturbed soil stabilized by existing vegetation.

e. Maintenance - For an erosion and sediment control system to remain effective, it must receive timely inspection and maintenance. Sediment needs to be removed from sediment traps; straw bales need to be replaced; inlets need to be cleaned; protective mulches may need to be reapplied; weeds need to be controlled; water control structures need to be checked for integrity, etc.

## 1-7 Design and Construction Requirements for Drainage Improvements

Grates shall be provided only at the inlet ends of drainage pipes, and shall be appended to the drainage report.

Hydraulic grade line profiles are NOT to be shown on construction drawings.

All pipes are to be installed according to manufacturer's recommendations. Among the drainage products and materials which are acceptable for use in the Triview Metropolitan District:

(1) Reinforced Concrete Pipe (RCP)

Class II may be used in parks and open space areas. Class III is the minimum allowed in areas subject to traffic loadings. See ASTM C-76.

(2) Corrugted Metal Pipe (CMP)
Where a designer is contemplating the use of corrugated metal pipe (soil resistivity testing is required)

(3) Corrugated aluminum, as long as there is only a slight to moderate potential for scour.

(4) Ribbed Plastic

Bedding material shall conform to section 635.14 and 637.06 of the Standard Specifications of the City of Colorado Springs.

All construction shall conform to the Standard Specifications of the City of Colorado Springs latest revision.

# SECTION 4

# APPENDIX A
# STANDARD DRAINAGE DETAILS

NOTE: *Standard Drainage Details contained in Appendix A of the Storm Drainage and Erosion Control Section of this Manual have been prepared by the City of Colorado Springs and have been adopted by the Triview Metropolitan District.*

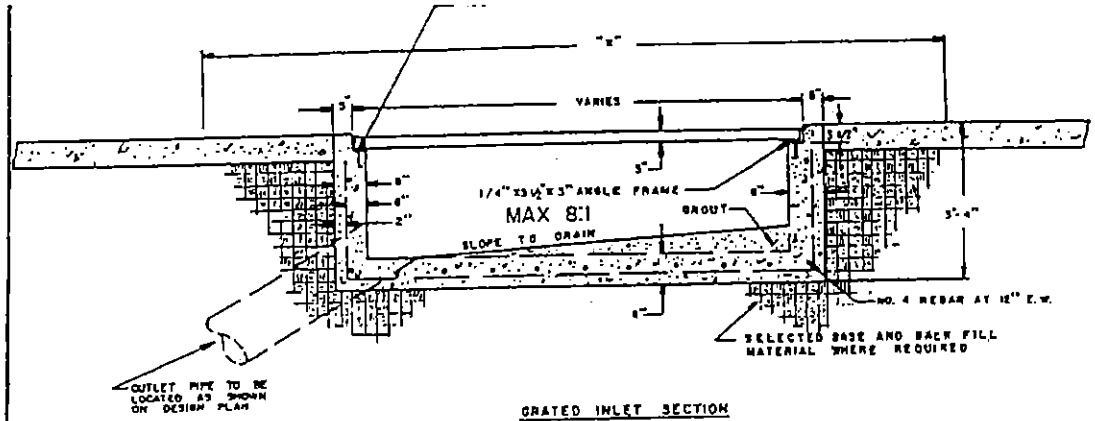


GRATED INLET SECTION

| LENGTH TO BE SPECIFIED | | | |
|---|---|---|---|
| BOX LENGTH | 5'- 10 1/2" | 8'- 4 1/2" | 10'- 10 1/2" |
| GRATE LENGTH | 5'- 0" | 7'- 6" | 10'- 0" |

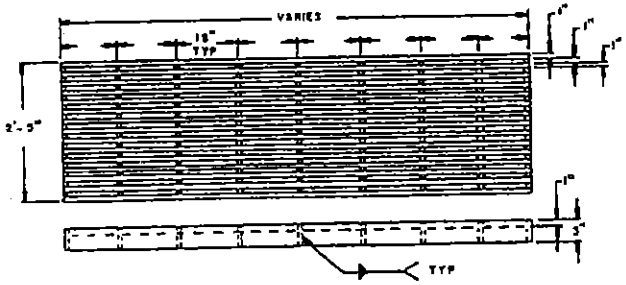


GRATE DETAIL

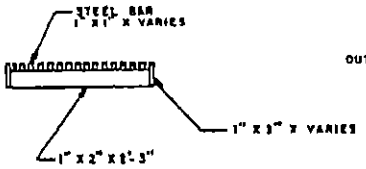


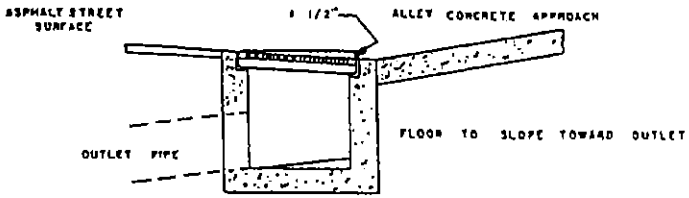


SECTION A-A

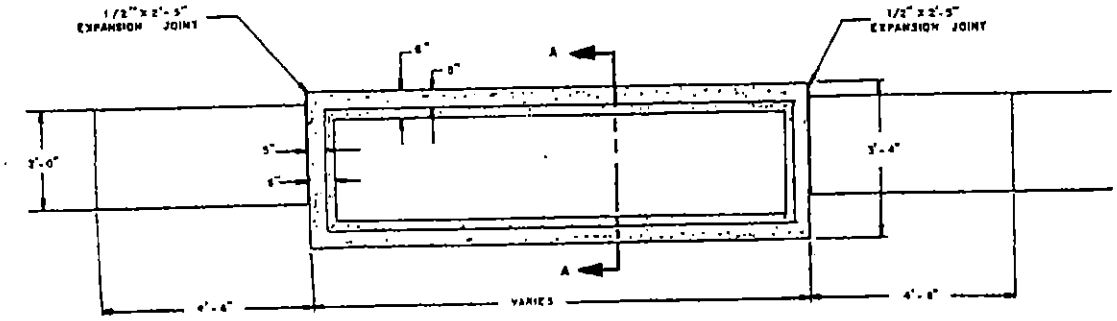


GRATED INLET CATCH BASIN
GRATE NOT SHOWN IN PLACE

NOTES

1. GRATES TO BE PAINTED TO COLORADO STATE HIGHWAY DEPTS SPECIFICATIONS FOR PAINTING STRUCTURAL STEEL
2. "x" EQUALS BOX LENGTH PLUS 9'
3. REFER TO PLANS AND SPECIFICATIONS FOR LOCATION AND DIMENSIONS OF STRUCTURE.
4. OUTLET PIPE SHALL BE CUT OFF EVEN WITH INSIDE WALL.

| CITY OF COLORADO SPRINGS | | | |
|---|---|---|---|
| GRATED INLET | | | |
| APPROVED BY | | ENGINEER | |
| SCALE | DATE | DWN BY | DWG NO D-9 |

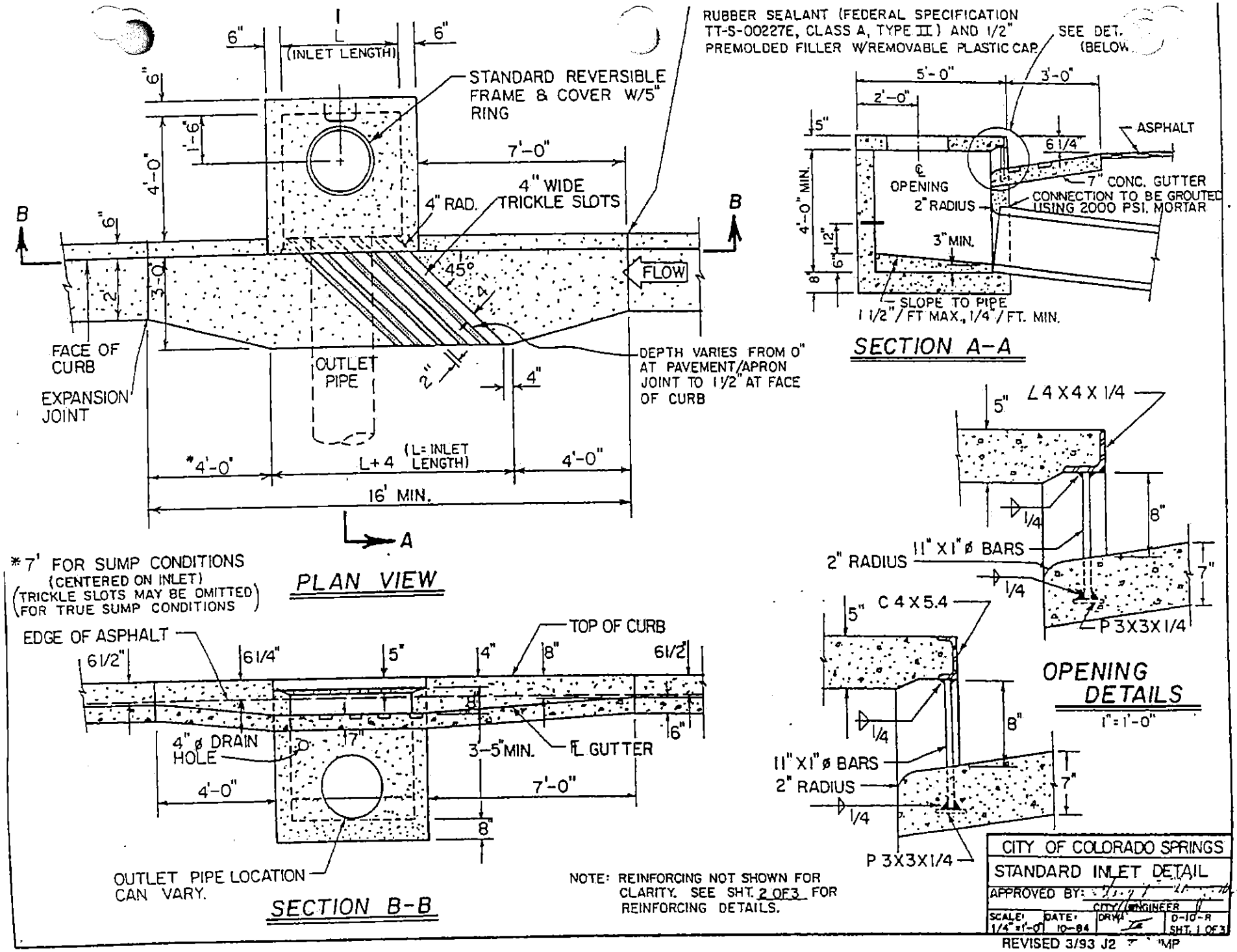
6"
L
(INLET LENGTH)
6"
STANDARD REVERSIBLE FRAME & COVER W/5" RING
7'-0"
4" WIDE TRICKLE SLOTS
4" RAD.
45°
4
FLOW
B
B
4'-0"
6"
2'
3'-0"
FACE OF CURB
EXPANSION JOINT
OUTLET PIPE
2"
4"
DEPTH VARIES FROM 0" AT PAVEMENT/APRON JOINT TO 1 1/2" AT FACE OF CURB
*4'-0"
L+4 (L= INLET LENGTH)
4'-0"
16' MIN.
A
PLAN VIEW
* 7' FOR SUMP CONDITIONS (CENTERED ON INLET) (TRICKLE SLOTS MAY BE OMITTED FOR TRUE SUMP CONDITIONS)
RUBBER SEALANT (FEDERAL SPECIFICATION TT-S-00227E, CLASS A, TYPE II) AND 1/2" PREMOLDED FILLER W/REMOVABLE PLASTIC CAP
SEE DET. (BELOW)
5'-0"
3'-0"
2'-0"
5"
6 1/4"
ASPHALT
℄ OPENING
7" CONC. GUTTER
CONNECTION TO BE GROUTED USING 2000 PSI. MORTAR
2" RADIUS
4'-0" MIN.
12"
6"
8"
3" MIN.
SLOPE TO PIPE 1 1/2"/FT MAX., 1/4"/FT. MIN.
SECTION A-A
5"
∠4X4X1/4
1/4
8"
2" RADIUS
11" X 1" ø BARS
7"
1/4
P 3X3X1/4
5"
C 4X5.4
1/4
8"
11" X 1" ø BARS
2" RADIUS
7"
1/4
P 3X3X1/4
OPENING DETAILS
1" = 1'-0"
EDGE OF ASPHALT
TOP OF CURB
6 1/2"
6 1/4"
5"
4"
8"
6 1/2"
4" ø DRAIN HOLE
7"
3-5" MIN.
℄ GUTTER
6"
4'-0"
7'-0"
8"
OUTLET PIPE LOCATION CAN VARY.
SECTION B-B
NOTE: REINFORCING NOT SHOWN FOR CLARITY. SEE SHT. 2 OF 3 FOR REINFORCING DETAILS.
CITY OF COLORADO SPRINGS
STANDARD INLET DETAIL
APPROVED BY:
CITY ENGINEER
SCALE: 1/4" = 1'-0"
DATE: 10-84
DRWN
D-10-R
SHT. 1 OF 3
REVISED 3/93 J2

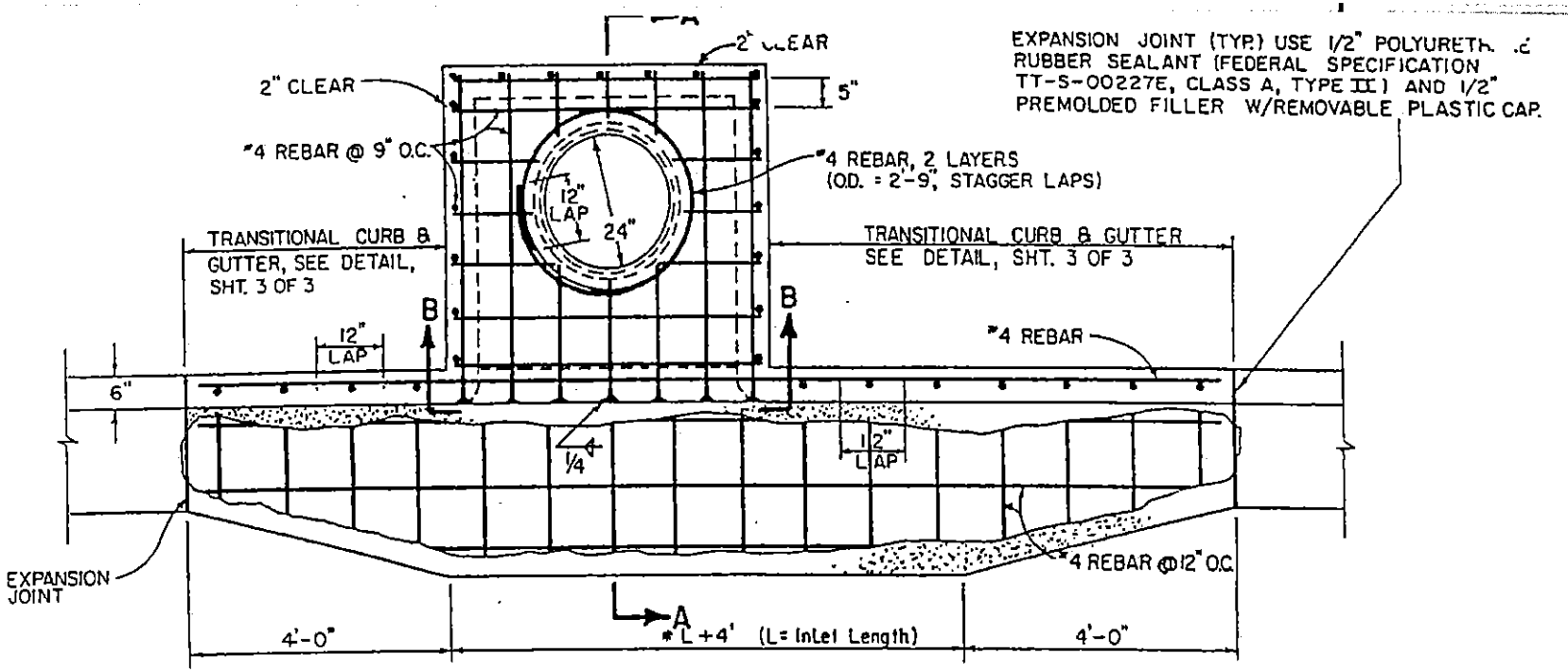


## PLAN VIEW

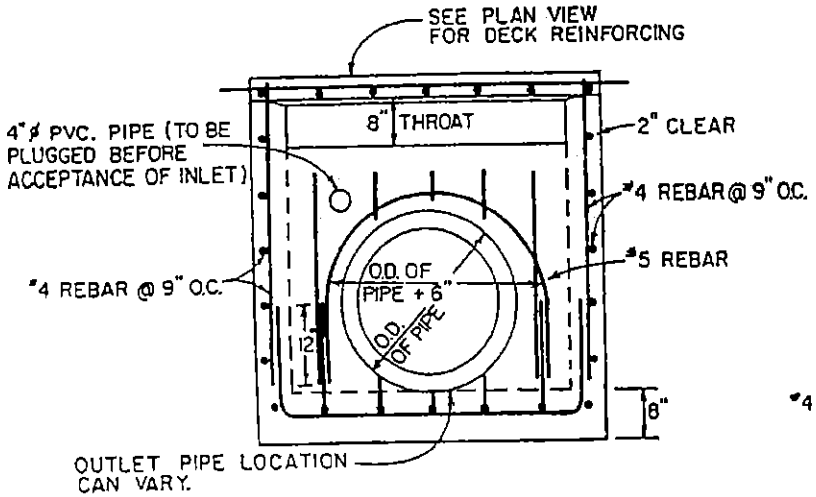


## SECTION B-B

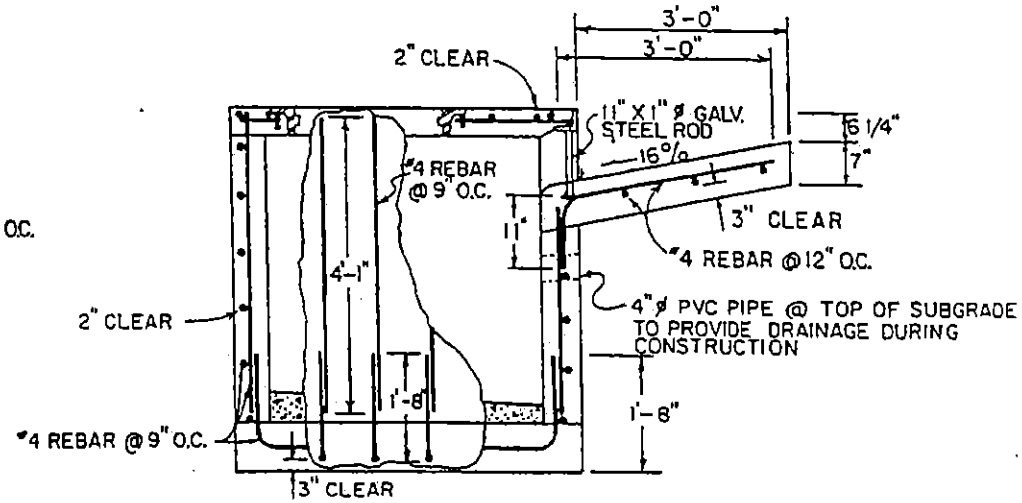


## SECTION A-A

| CITY OF COLORADO SPRINGS | | | |
|---|---|---|---|
| INLET REINFORCING | | | |
| APPROVED BY: CITY ENGINEER | | | |
| SCALE: 3/8" = 1'-0" | DATE: 12-94 | DRW: | D-10-R SHT. 2 OF 3 |

1) All work shall be done in accordance with the standards and supplemental specifications applicable to the project.
2) Curb face assembly shall be painted yellow. One coat of shop primer and two coats of industrial enamel.
3) Steel on curb face assembly shall be ASTM A36, and shall be free of rust and dirt.
4) Reinforcing bars shall be ASTM A615, Grade 40, billet steel (deformed) and shall be marked with bar designation, grade and mill marking.
5) Inlet or outlet pipe locations may vary within the curb inlet. Reinforcing details shown are typical.
6) Curvature of lip at gutter and side openings shall be made with curved forms.
7) Depth and length of inlet may vary. Length should vary by 2' increments. Wall thickness should increase to 8" if depth is greater than 4'. For depths greater than 8', wall thickness and reinforcing shall be approved by the City Engineering Division.
8) Floor of inlet shall be trowelled to a smooth, hard surface and shall slope towards the outlet (12.5% max., 2.0% min.).
9) Storm sewer lid/frame assembly should be located as shown along back wall of curb inlet.
10) Outlet pipe to be trimmed to final shape and set in place before curb inlet is poured.
11) When curb inlet depth is greater than 4', steps are to be installed @ 16" c/c with top step located 6" below inside cover.
12) Steps shall be cast iron or extruded aluminum, 1000 lb. capacity, 12" wide with non-skid grooves and drop front on safety noses, in accordance with approved OSHA requirements.
13) Top deck slab shall have a min. 1/4" per foot slope toward the street.
14) If curb face opening is greater than 4', vertical support bars will be required at 3' intervals.
15) Top of curb inlet to be constructed to match curb & gutter design grades at each location.
16) Minimum concrete strength = 3000 psi @ 28 days, unless otherwise approved, and shall contain ASTM C150, Type IA or IIA cement.
17) All reinforcing bars shall have a minimum 1-1/2" clear, except as noted.
18) Weld reinforcing to steel on curb face assembly, or use alternate anchor detail.
19) Pre-cast curb inlets will be accepted upon annual approval of shop drawings.
20) When pre-cast curb inlets are used, they must be bedded in a minimum 6" layer of minus 3/8" clean gravel.

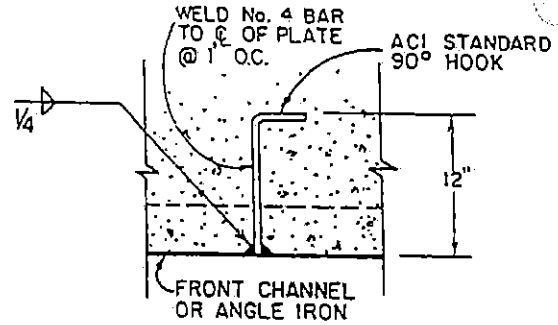


ALTERNATE ANCHOR DETAIL

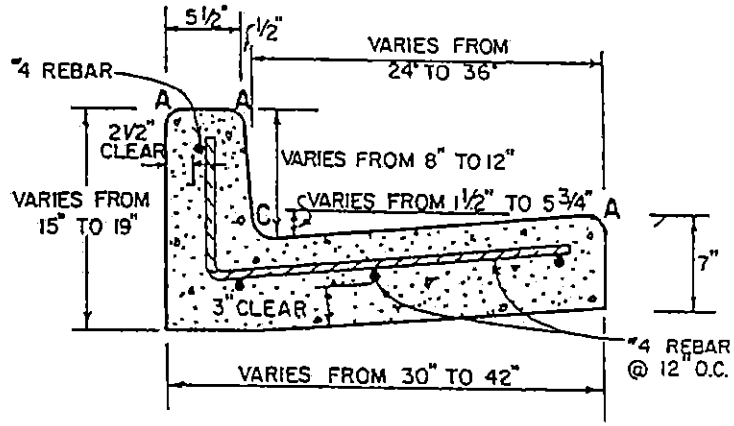


TRANSITIONAL CURB & GUTTER

| LENGTH FOR RADII | |
|---|---|
| A=1/2" | C=1 1/2" |

| CITY OF COLORADO SPRINGS | | | |
|---|---|---|---|
| INLET DETAILS & NOTES | | | |
| APPROVED BY: Gary C. Haynes CITY ENGINEER | | | |
| SCALE: NONE | DATE: 12-84 | DRW: | D-10-R SHT. 3 OF 3 |

REVISED JAN. '89 PLB REVISED

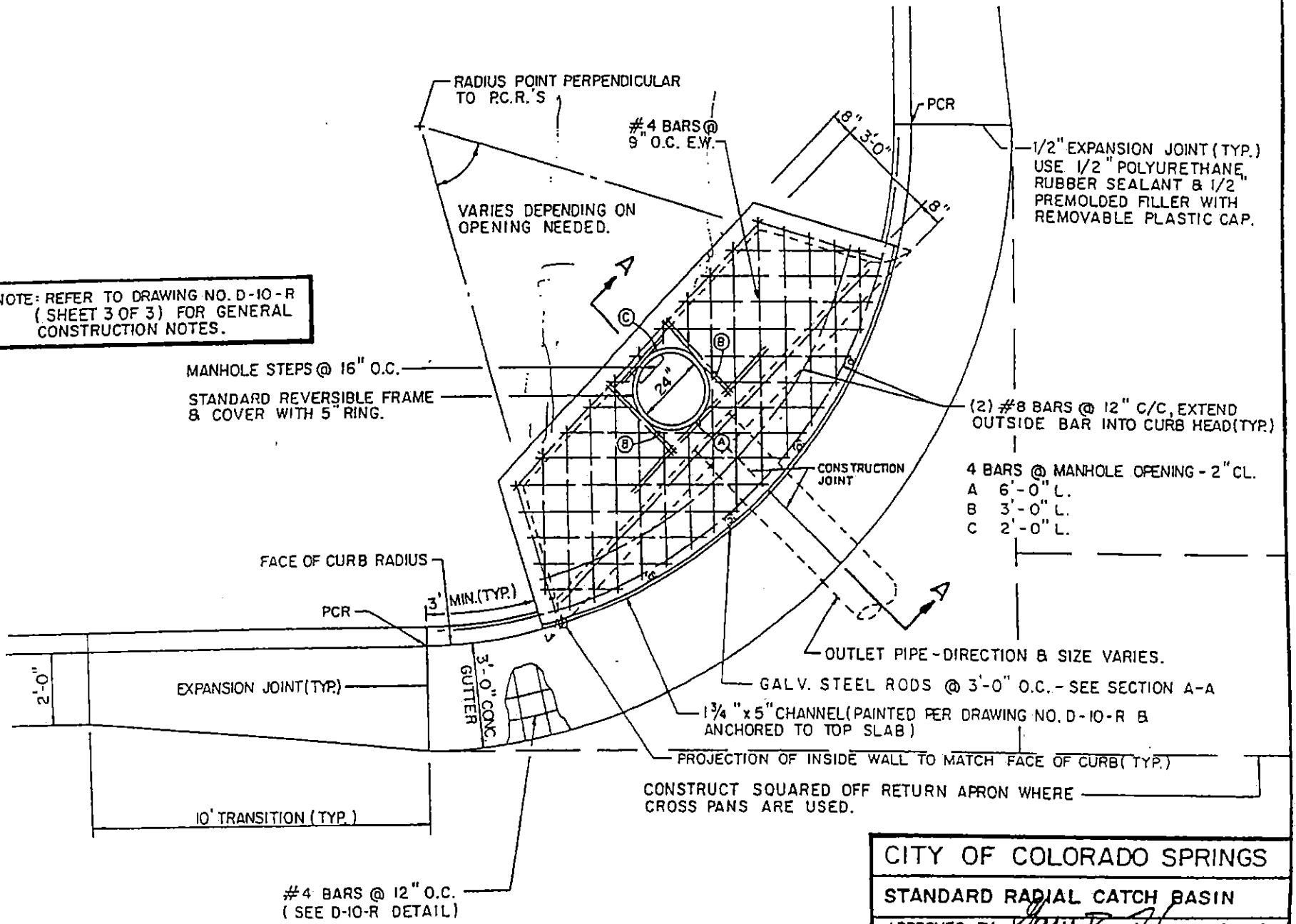


| CITY OF COLORADO SPRINGS | | | |
|---|---|---|---|
| STANDARD RADIAL CATCH BASIN | | | |
| APPROVED BY Gary R. Haynes CITY ENGINEER | | | |
| SCALE: NO SCALE | DATE: MAR. 89 | DRAWN: PL. B | D-11 A |

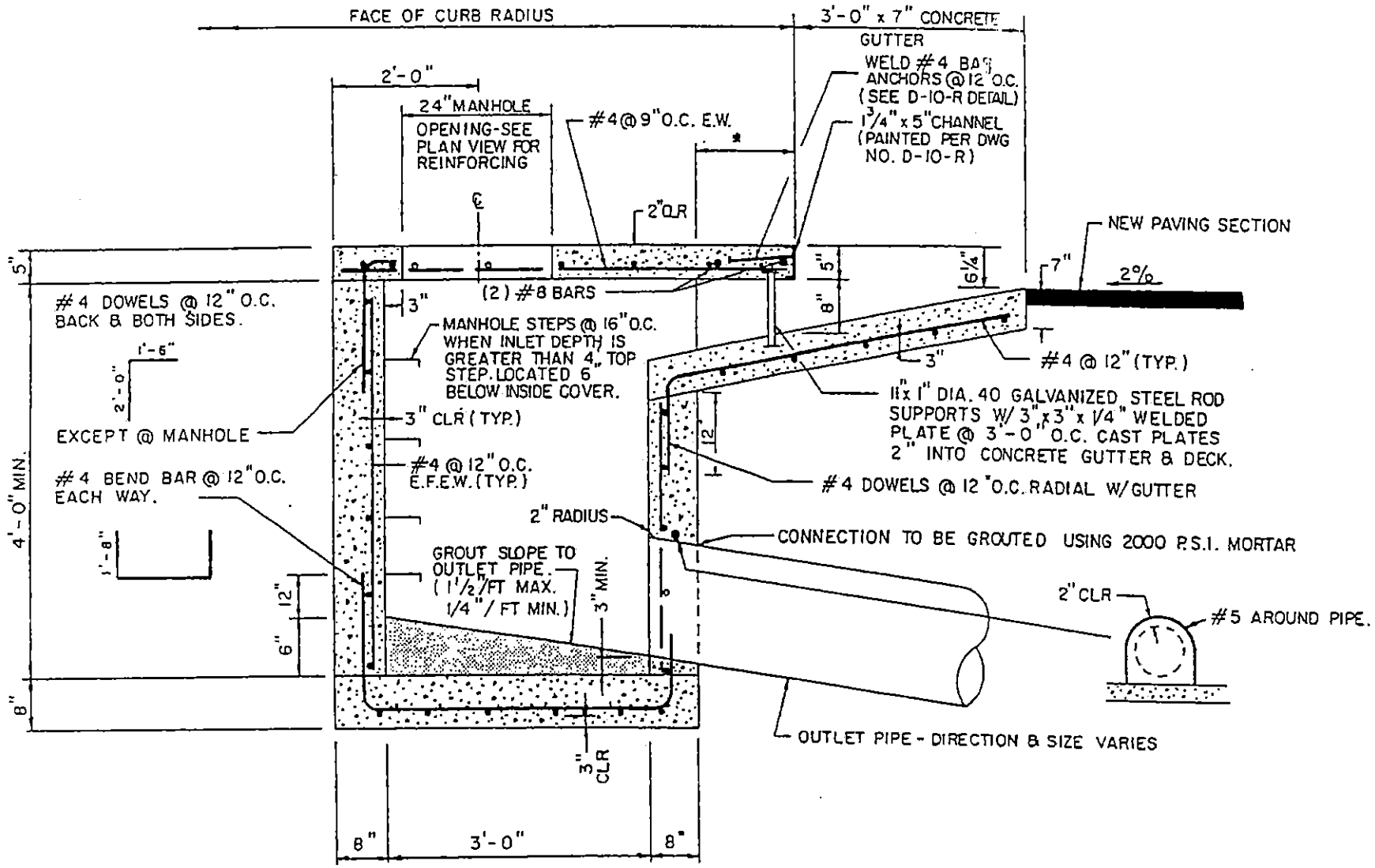


* DIMENSION VARIES FROM 0" TO MAX. @ MIDPOINT OF CURB RADIUS.

## SECTION A-A

| | | | |
|---|---|---|---|
| CITY OF COLORADO SPRINGS | | | |
| STANDARD RADIAL CATCH BASIN | | | |
| APPROVED BY Gary R. Haynes CITY ENGINEER | | | |
| SCALE: NO SCALE | DATE: MAR. 89 | DRAWN: P.L.B. | SHEET: D-11 8 2 OF 2 |

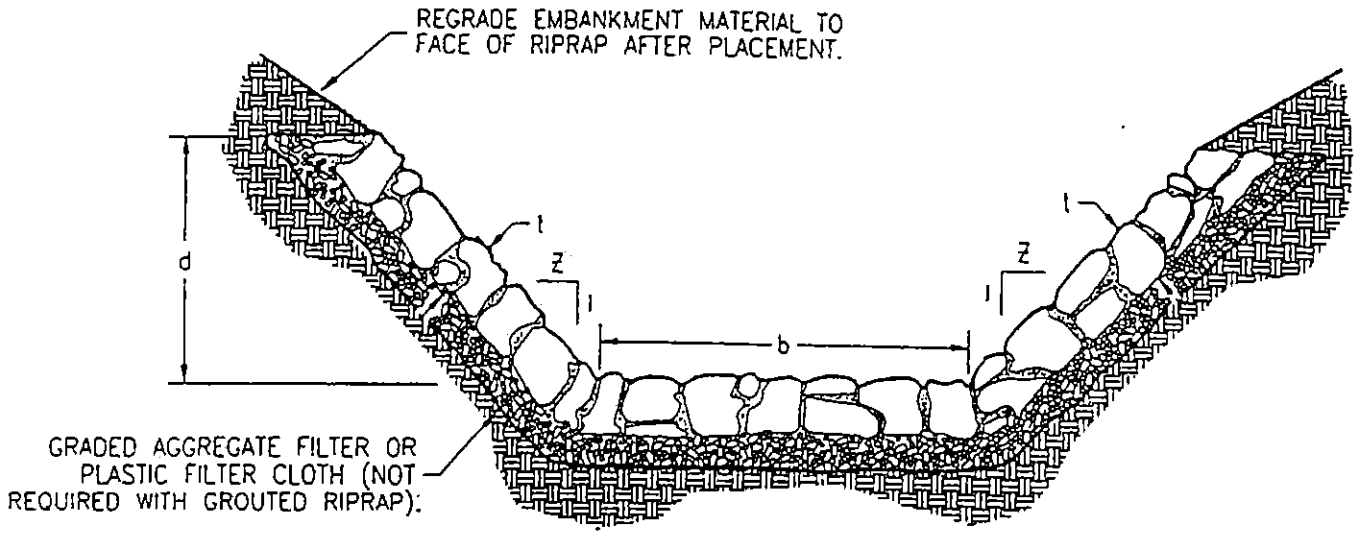


NOTES

1. All Riprap channels to be grouted unless otherwise approved by the City Engineer.
2. Riprap shall have a specific gravity of 2.50 or 156 lbs./cu.ft.
3. Size 't' = 2.0 x (specified stone diameter).
4. Z = not less than 2.5.
5. The above are minimum requirements only and are not to be considered as a substitute for a complete hydraulic design reflecting local parameters.

NOTE
ALL RIPRAP CHANNEL DESIGN SHALL BE IN ACCORDANCE WITH THE CITY OF COLORADO SPRINGS / EL PASO COUNTY DRAINAGE CRITERIA MANUAL.

| | |
|---|---|
| CITY OF COLORADO SPRINGS | |
| Riprap Channel Detail | |
| approved by: | City Engineer |
| Drawn BY: JZ | DA /93 STD. D-12 |

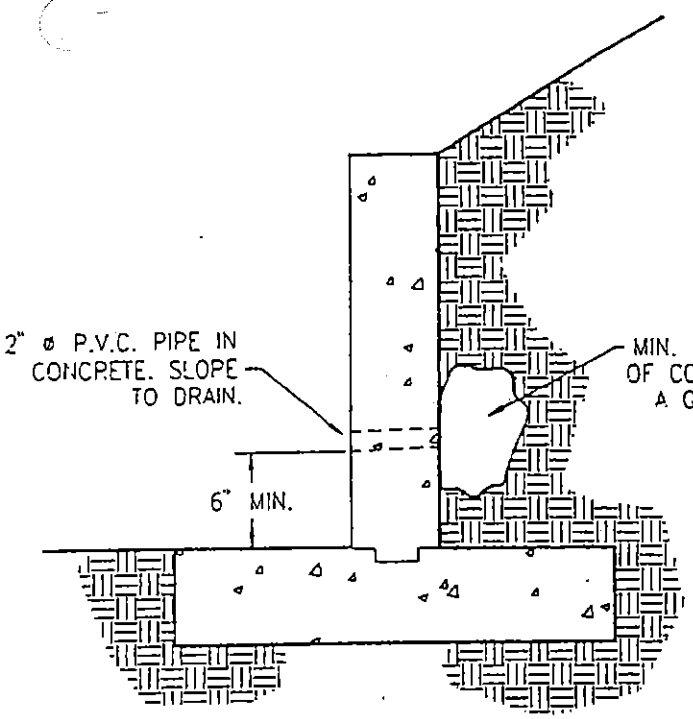


WINGWALL / RETAINING WALL

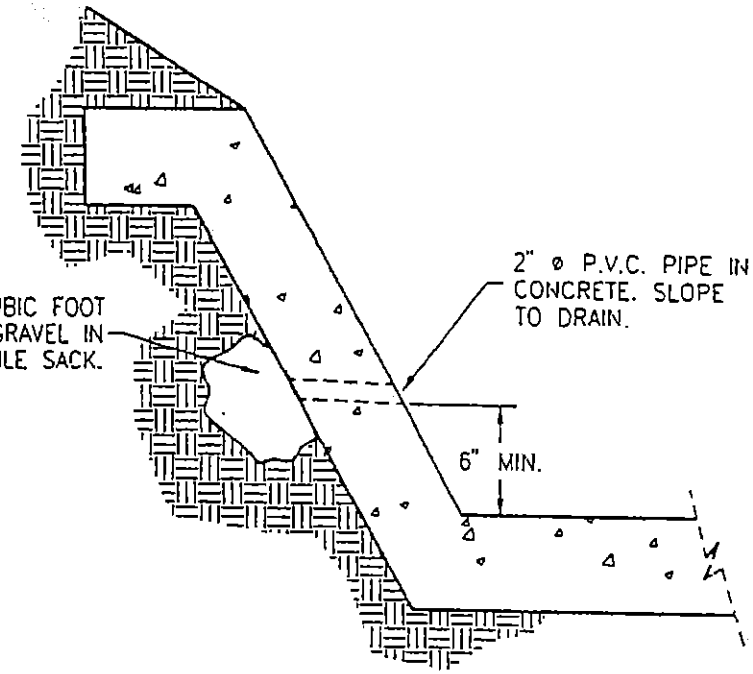


CONCRETE CHANNEL

NOTES

1. NO. 40 galvanized steel screen and filter fabric to be used with weep holes >2"
2. Miter P.V.C. Pipe flush with concrete.
3. Additional volume of coarse gravel or a complete rock underdrain system may be required if local groundwater and/or soil conditions dictate.
4. Spacing to be determined by the engineer upon final design.

| | | |
|---|---|---|
| CITY OF COLORADO SPRINGS | | |
| Weep Hole Detail | | |
| approved by: | | City Engineer |
| Drawn BY: JJ | DATE 03/93 | STD. D-13 |

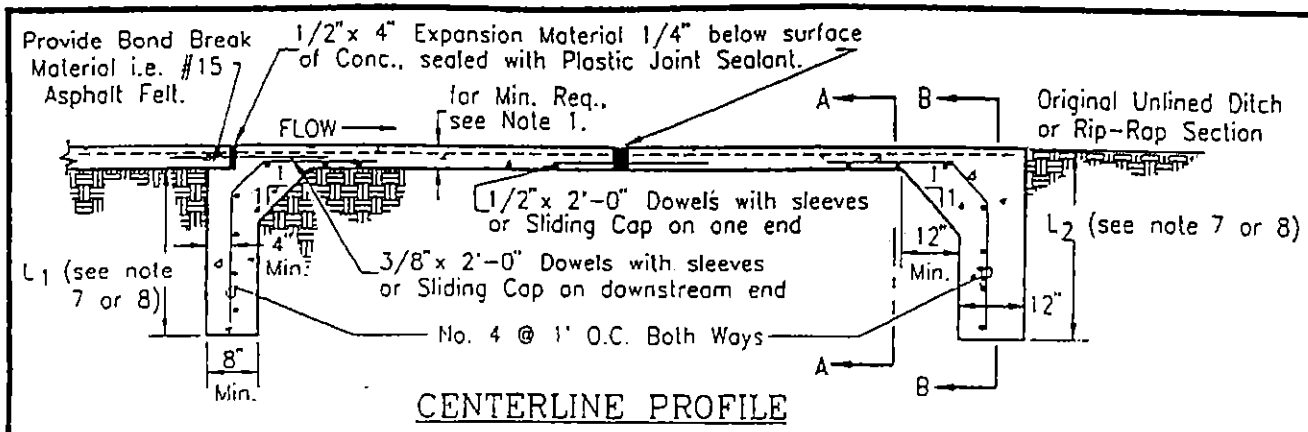


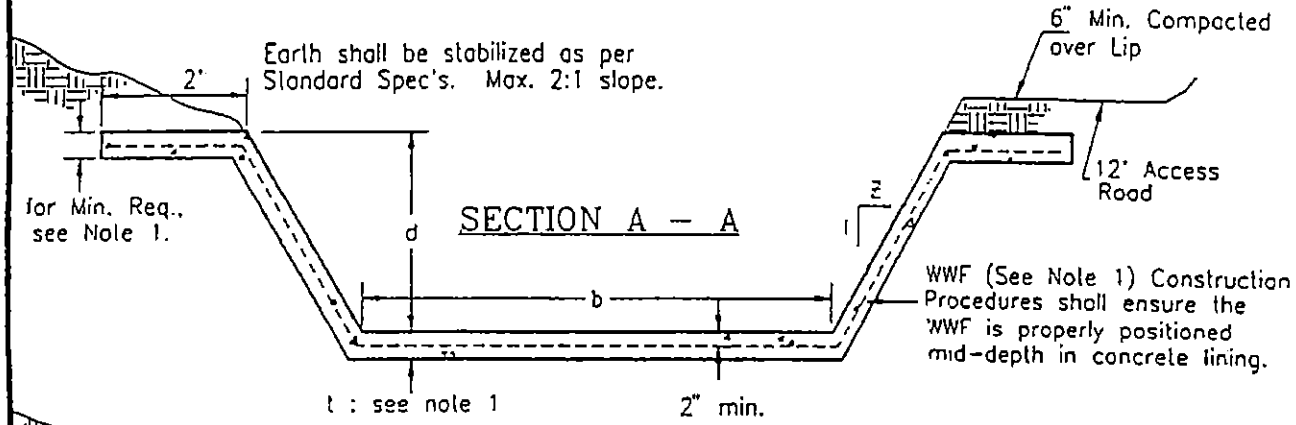


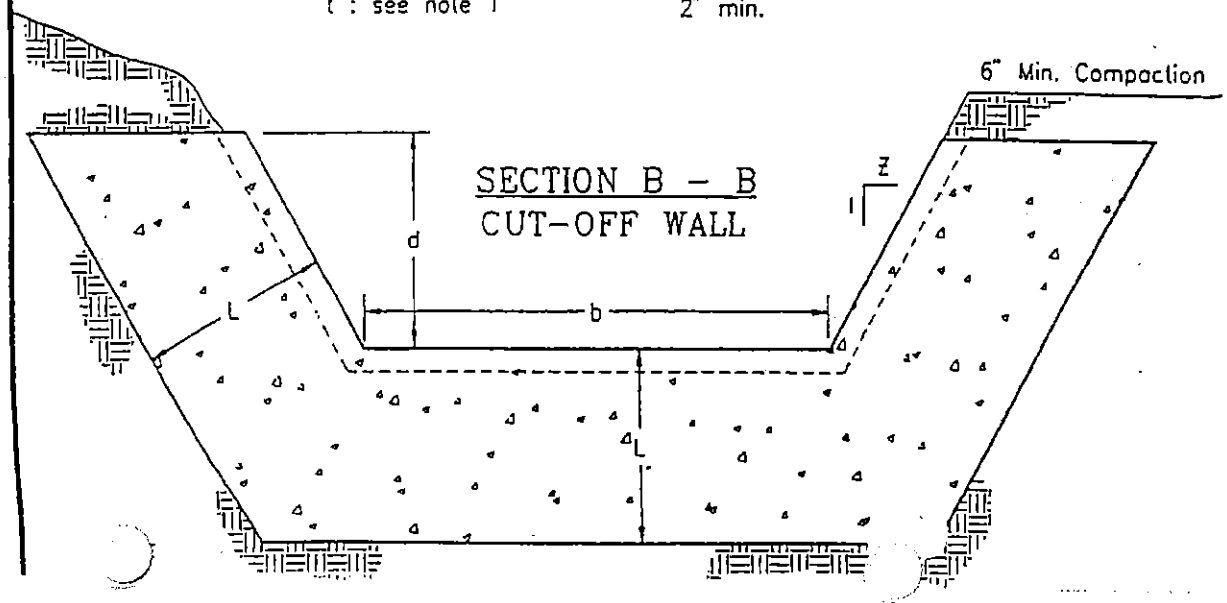


NOTES

1. 4" Concrete Channel with 6x6, 4.4 Welded Wire Fabric (WWF). If 'b' is greater than 4', floor thickness shall be minimum 6" with #4 @18" E.W. This is a minimum design. Soil investigations or detailed hydraulic or structural analysis may determine that greater Concrete thickness and/or reinforcing steel is required
2. 1/2" Contraction Joints shall be a minimum of 20' spacing unless specified otherwise by the Engineer.
3. Expansion Joints shall be a maximum of 100' spacing unless specified otherwise by the Engineer (see D-15)
4. Concrete shall be Type II. 4000 psi, with air entrainment @ 6% (+1.-2) in accordance with Sections 612 and 613.
5. The Surface shall be that of a Broom Finish.
6. Z = not less than 1.0
7. $L_1$ = 3'- 6" and $L_2$ = 6'- 0" min. if Design Flow is Supercritical.
8. $L_1$ = 2'- 6" and $L_2$ = 4'- 0" min. if Design Flow is Subcritical
9. See D-13 Weep Hole Detail.
10. Cut-off Wall spacing to be Max 200 - 250 feet, typ.

| CITY OF COLORADO SPRINGS | |
|---|---|
| Concrete Channel Detail | |
| Approved by: | City Engineer |
| Drawn BY JJ | DATE: STD. D-14 |

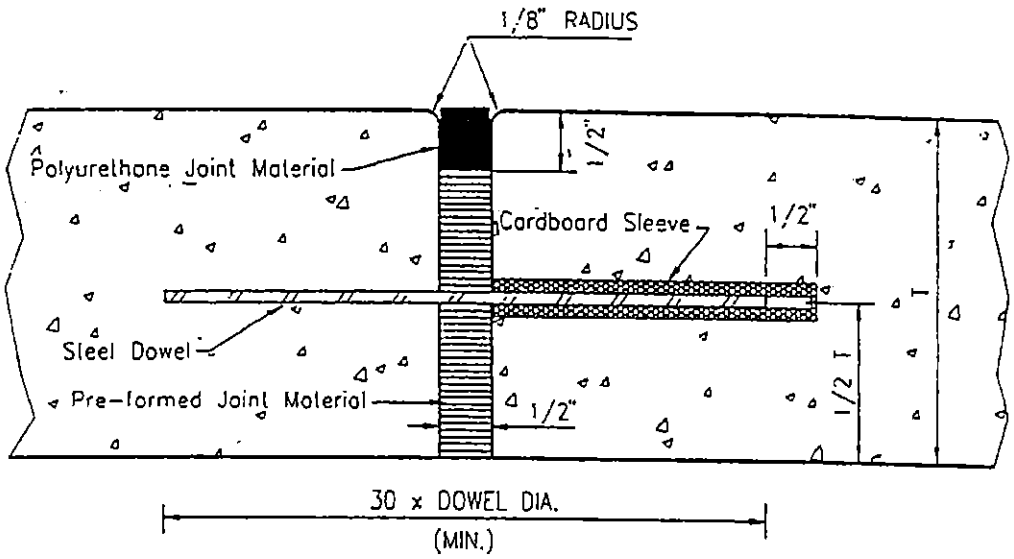


NOTES

1. Size and Spacing of Dowels to be determined by the detail design.
2. Individual requirements may demand greater dowel lengths.
3. Minimum T = 6" ; Transition will be required if Channel Floor is less than 6".

FOR CONCRETE LINED CHANNELS

NO SCALE

| | |
|---|---|
| CITY OF COLORADO SPRINGS | |
| Expansion Joint Detail | |
| approved by: City Engineer | |
| Drawn BY: JD | DATE: 08/93 STD. D-15 |

† 3 3/4" IF 6" VERTICAL CURB & GUTTER,
6 1/4" IF 8" VERTICAL CURB & GUTTER

■ NOTE:
FOR ALL INLETS ON A CONTINUOUS GRADE, THE UPSTREAM TRANSITION GUTTER LENGTH SHALL BE 10 FEET. FOR ALL OTHER LOCATIONS, TRANSITION LENGTHS SHALL BE 3 FEET MINIMUM. ADDITIONAL 10 FEET TRANSITION NEEDED IF NORMAL RAMP CURB & GUTTER.

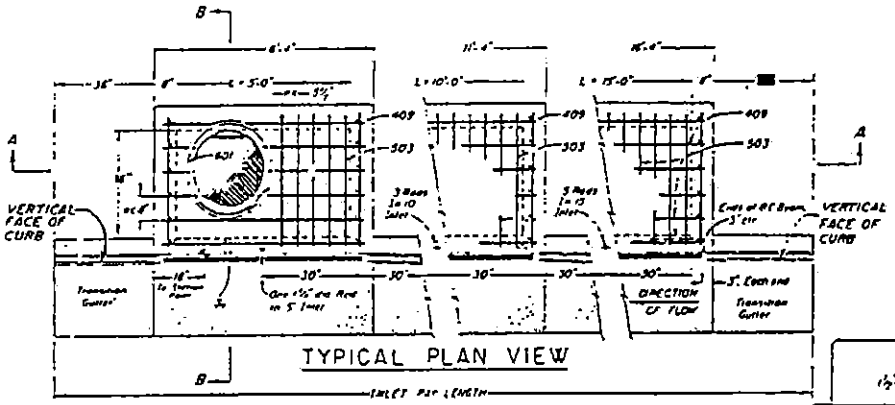


TYPICAL PLAN VIEW

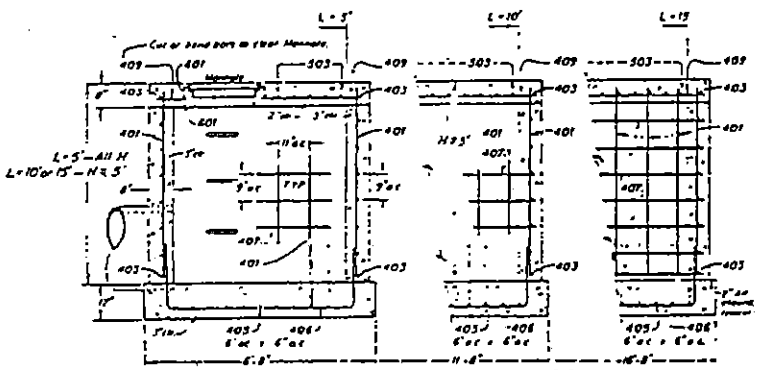


SECTION A-A REGULAR INLET

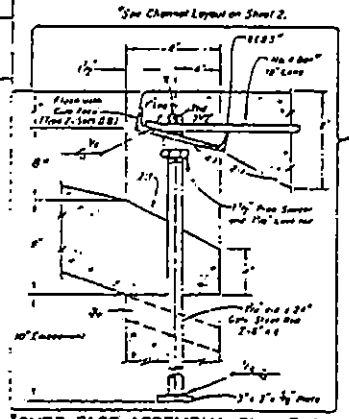

†CURB FACE ASSEMBLY. Place Entire Assembly Before Pouring Concrete.

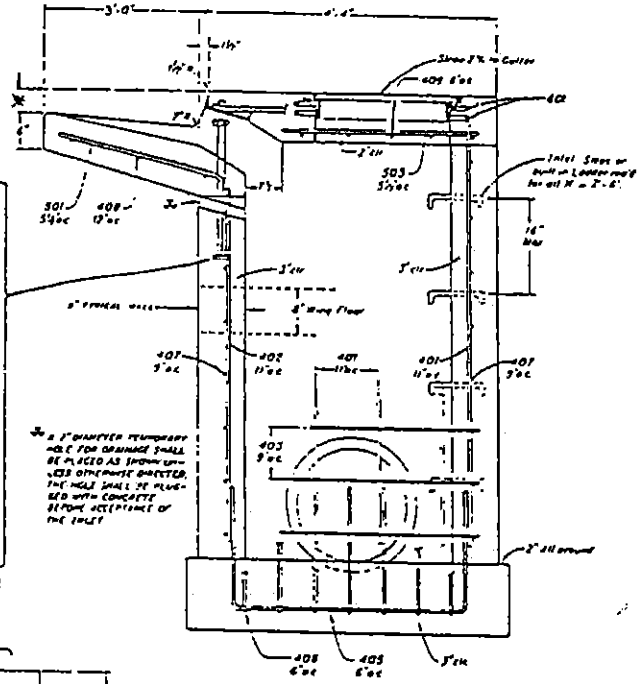

SECTION B-B
TYPICAL END VIEW

NOTE: MANHOLE RING & COVER, STATION POINT AND OUTFLOW PIPE ARE TO BE LOCATED AT THE SAME END OF THE INLET.

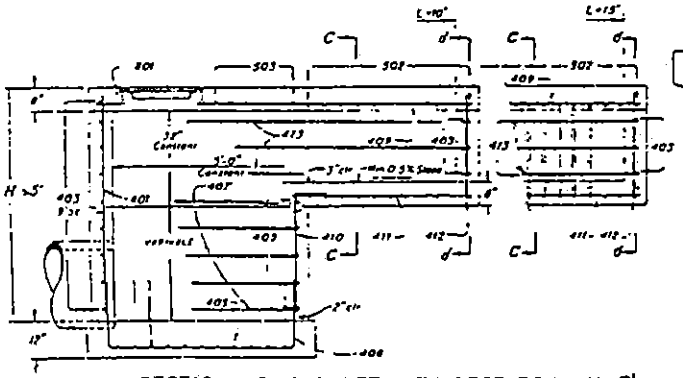

SECTION A-A INLET WITH DROP BOX — H>5'

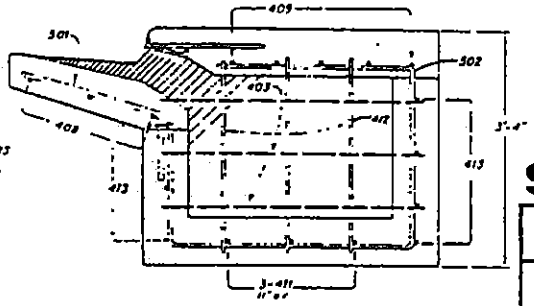

( Dotted Bars are in Section d-d )

SECTIONS C-C & d-d

# SPECIAL DESIGN INLET

| | | | |
|---|---|---|---|
| CITY OF COLORADO SPRINGS, COLORADO | | | |
| COLORADO DEPARTMENT OF HIGHWAYS CURB INLET TYPE R (MODIFIED) | | | |
| APPROVED BY: Gary R. Haynes CITY ENGINEER | | | |
| SCALE AS SHOWN | DATE REV. 1/88 | DWN. BY JLO | D-19 1 OF 2 |

NOTE: THIS IS A SPECIAL DESIGN INLET TO BE USED ONLY WITH PRIOR APPROVAL BY THE CITY ENGINEER.

REVISED JAN'89 PLB SPECIAL INLET

## TABLE ONE — BAR LIST FOR CURB INLETS, TYPE R

| MARK | DIA in | o.c. Spacing | TYPE | ALL INLETS L = 5' No Req'd | Length | INLETS, H ≤ 5' 10' No Req'd | Length | 15' No Req'd | Length | INLETS, H > 5' 10' No Req'd | Length | 15 No Req'd | Length |
|---|---|---|---|---|---|---|---|---|---|---|---|---|---|
| 401 | | 11" | II | 13 | * | 21 | * | 26 | * | 11 | * | 11 | * |
| 402 | | 11" | II | * | * | 13 | * | 18 | * | * | * | * | * |
| 403 | | 9" | II | * | 4'-0" | * | 4'-0" | * | 4'-0" | * | 4'-0" | * | 4'-0" |
| 405 | | 6" | VI | 11 | 6'-10" | 21 | 6'-10" | 31 | 6'-10" | 11 | 6'-10" | 11 | 6'-10 |
| 406 | | 6" | VIII | 7 | 8'-10" | 7 | 13'-10" | 7 | 18'-10" | 7 | 8'-10" | 7 | 8'-10" |
| 407 | ½ | 9" | II | * | 5'-10" | * | 10'-10 | * | 15'-10" | * | 5'-10" | * | 5'-10" |
| 408 | | 12" | II | 3 | 6'-0" | 3 | 11'-0" | 3 | 16'-0" | 3 | 11'-0" | 3 | 16'-0" |
| 409 | | 8" | II | 6 | 5'-10" | 6 | 10'-10" | 6 | 15'-10" | 6 | 10'-10" | 6 | 15'-10" |
| 410 | | 11" | VII | | | | | | | 3 | * | 3 | * |
| 411 | | 11" | II | | | | | | | 3 | 5'-4" | 3 | 10'-3" |
| 412 | | 11" | II | | | | | | | 3 | 2'-9" | 3 | 2'-9" |
| 413 | | 9 | II | | | | | | | 7 | 10'-10" | 7 | 15'-10" |
| 501 | | 5½" | II | 11 | 4'-4" | 22 | 4'-4" | 33 | 4'-4" | 22 | 4'-4" | 33 | 4'-4" |
| 502 | ⅜" | 5½" | III | | | | | | | 11 | 11'-5" | 22 | 11'-5" |
| 503 | | 5½" | II | 5 | 3'-6" | 16 | 3'-6 | 27 | 3'-6" | 6 | 3'-6" | 6 | 3'-6" |
| 601 | ¼" | 2½" | V | 2 | 8'-10" | 2 | 8'-10" | 2 | 8'-10" | 2 | 8'-10" | 2 | 8'-10" |
| Rebars | — | — | — | 1 | 5'-10 | 1 | 10'-10" | 1 | 15'-10" | 1 | 10'-10" | 1 | 15'-10" |
| F | | | | 2 Bars, 1 Pair | — | 4 Bars, 3 Pairs | — | 6 Bars, 3 Pairs | — | 4 Bars, 3 Pairs | — | 6 Bars, 3 Pairs | — |

* Variable, refer to Table TWO
# Include 18" No 4 Bars (See Channel Layout Detail).
* See Curb Face Assembly on Sheet 1 and Channel Layout Details on this sheet

REGULAR INLETS — DROP BOX INLETS

## TABLE TWO — BARS AND QUANTITIES VARIABLE WITH H

| H | Length 401 | 402 | 410 | No Req'd Regular 403 | 407 | No Req'd Drop Box 403 | 407 | L = 5' Cu Yd Conc | Lb Steel | L = 10' Cu Yd Conc | Lb Steel | L = 15' Cu Yd Conc | Lb Steel |
|---|---|---|---|---|---|---|---|---|---|---|---|---|---|
| 3'-0" | 2'-8" | 1'-8" | | 10 | 7 | | | 3.2 | 285 | 5.3 | 497 | 7.4 | 708 |
| 3'-6" | 3'-2" | 2'-2" | | 10 | 7 | | | 3.4 | 305 | 5.7 | 538 | 7.9 | 747 |
| 4'-0" | 3'-8" | 2'-8" | | 12 | 9 | | | 3.7 | 326 | 6.0 | 559 | 8.4 | 786 |
| 4'-6" | 4'-2" | 3'-2" | | 12 | 9 | | | 3.9 | 334 | 6.4 | 571 | 8.8 | 803 |
| 5'-0" | 4'-8" | 3'-8" | | 14 | 11 | | | 4.1 | 354 | 6.7 | 603 | 9.3 | 844 |
| 5'-6" | 5'-2" | 4'-2" | 3'-5" | 16 | 13 | 15 | 8 | 4.4 | 375 | 6.0 | 601 | 7.5 | 840 |
| 6'-0" | 5'-8" | 4'-8" | 3'-11" | 16 | 13 | 16 | 8 | 4.6 | 382 | 6.3 | 616 | 7.7 | 850 |
| 6'-6" | 6'-2" | 5'-2" | 4'-5" | 18 | 15 | 18 | 8 | 4.8 | 402 | 6.4 | 637 | 7.9 | 870 |
| 7'-0" | 6'-8" | 5'-8" | 4'-11" | 20 | 17 | 19 | 10 | 5.0 | 423 | 6.6 | 654 | 8.1 | 887 |
| 7'-6" | 7'-2" | 6'-2" | 5'-5" | 20 | 17 | 20 | 10 | 5.3 | 430 | 6.9 | 664 | 8.4 | 897 |
| 8'-0" | 7'-8" | 6'-8" | 5'-11" | 22 | 19 | 22 | 12 | 5.5 | 451 | 7.1 | 684 | 8.6 | 917 |
| 8'-6" | 8'-2" | 7'-2" | 6'-5" | 24 | 21 | 23 | 14 | 5.7 | 471 | 7.3 | 702 | 8.8 | 934 |
| 9'-0" | 8'-8" | 7'-8" | 6'-11" | 24 | 21 | 24 | 14 | 6.0 | 479 | 7.6 | 711 | 9.1 | 944 |
| 9'-6" | 9'-2" | 8'-2" | 7'-5" | 26 | 23 | 26 | 16 | 6.2 | 499 | 7.8 | 731 | 9.3 | 964 |
| 10'-0" | 9'-8" | 8'-8" | 7'-11" | 28 | 25 | 27 | 18 | 6.4 | 520 | 8.0 | 749 | 9.5 | 983 |
| 10'-6" | 10'-2" | 9'-2" | 8'-5" | 28 | 25 | 28 | 18 | 6.7 | 537 | 8.3 | 759 | 9.8 | 991 |
| 11'-0" | 10'-8" | 9'-8" | 8'-11" | 30 | 27 | 30 | 20 | 6.9 | 547 | 8.5 | 779 | 10.0 | 1012 |

NOTE: For L = 5', L = 10' and L = 15'

REGULAR INLETS: Total quantities required are OUTSIDE of the heavy black line

DROP BOX INLETS: Total quantities required are INSIDE of the heavy black line.

STEEL WEIGHTS DO NOT INCLUDE STRUCTURAL STEEL.

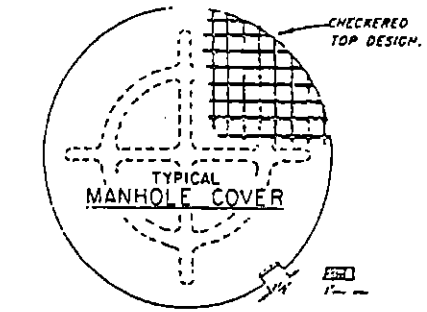


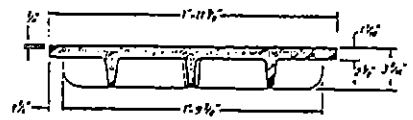

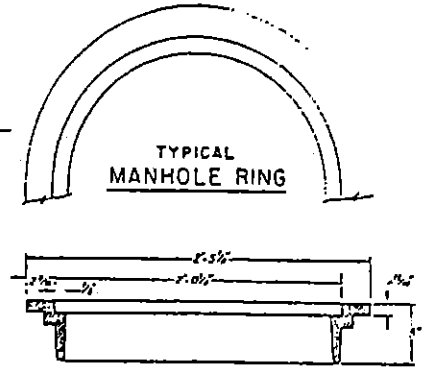


Approximate Weights:

| | | |
|---|---|---|
| Cover | = | 125 lbs. |
| Ring | = | 135 lbs. |
| TOTAL | = | 260 lbs. |

All work shall be done in accordance [illegible] Standard Specifications applicable [illegible] project.

All concrete shall be Class A or B (CDOH).

Concrete walls shall be formed on both sides and shall be 8" thick.

Inlet steps shall be as shown on the applicable (CDOH) Division "M" Standard.

Curb face assembly shall be galvanized after welding.

Exposed concrete corners shall be beveled to a 1-1/2" face. Curb and gutter corners shall be finished to match the existing curb and gutter beyond the transition gutter.

All reinforcing bars shall be tagged with bar designation and station number.

Reinforcing bars shall be deformed and shall be of intermediate grade steel.

Dimensions and weights of typical manhole ring and cover are nominal.

All bars shall be a minimum 2" clear.

Since pipe entries into the inlet are variable, the dimensions shown are typical. Actual dimensions and quantities for concrete and reinforcement shall be as required in the work.

Quantities include volumes occupied by pipes.

Structural steel shall be galvanized and shall conform to the requirements of Section 509 (CDOH).

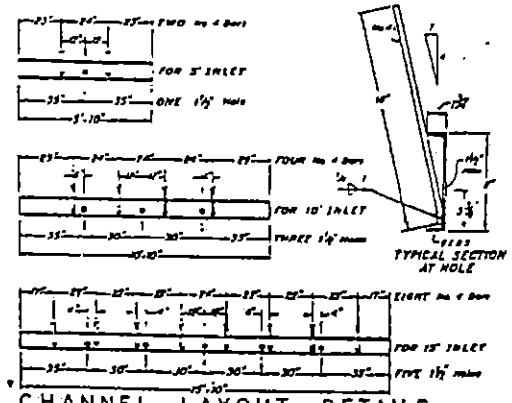


CHANNEL LAYOUT DETAILS

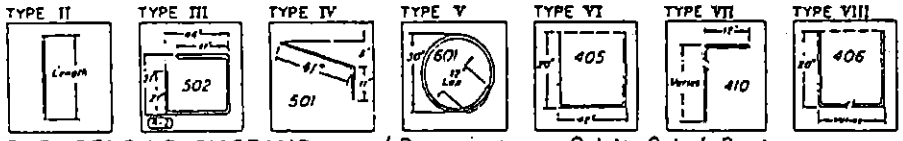


BAR BENDING DIAGRAMS — (Dimensions are Out-to-Out of Bar)

NOTE: FOR ALL INLETS, WHERE A 10' UPSTREAM TRANSITION GUTTER IS USED, THE CONCRETE QUANITY SHALL BE APPROX. 0.4 C.Y. MORE THAN THAT SHOWN.

# SPECIAL DESIGN INLET

CITY OF COLORADO SPRINGS, COLORADO.

COLORADO DEPARTMENT OF HIGHWAYS
CURB INLET TYPE R (MODIFIED)

APPROVED BY: Gary R. Haynes BPT
CITY ENGINEER

| SCALE | DATE | DWN. BY | |
|---|---|---|---|
| AS SHOWN | SEPT. 87 | JLO | D-19 SHT. 2 OF 2 |

NOTE: THIS IS A SPECIAL DESIGN INLET TO BE USED ONLY WITH PRIOR APPROVAL BY THE CITY ENGINEER.

REVISED JAN'89 PLB SPECIAL DESIGN INLET

| E I.D. | BW |
|---|---|
| 48" AND SMALLER | 6'-4" |
| 54" | 6'-10" |
| 60" AND LARGER | O.D.+16" |

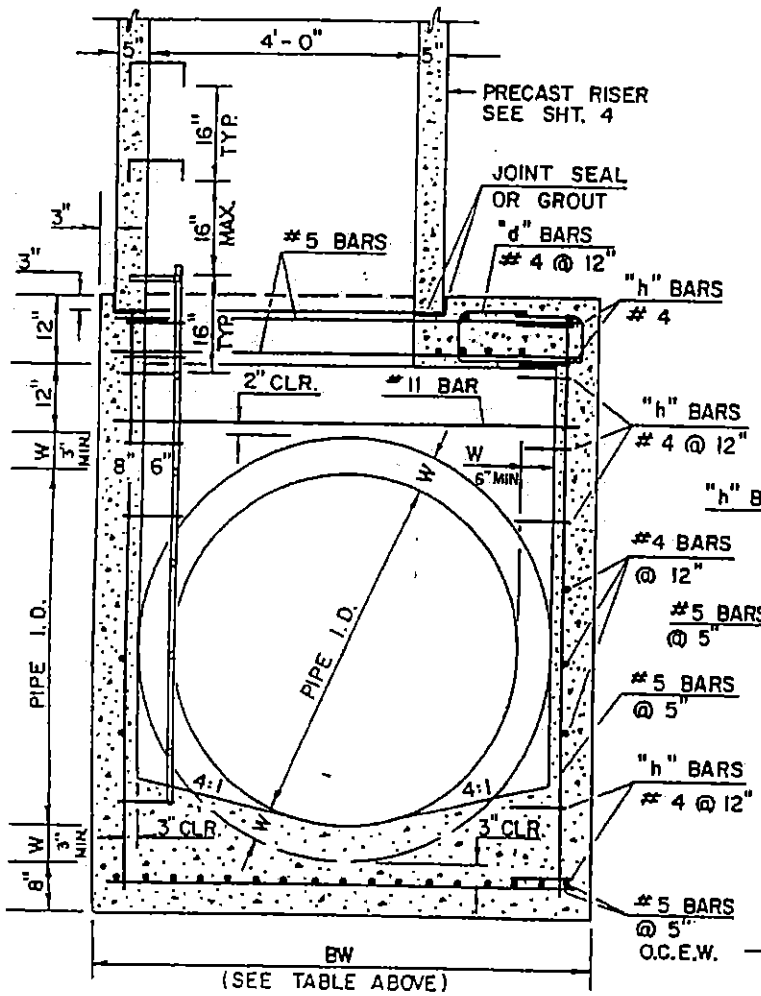


## SECTION VIEW

SCALE: 3/8" = 1'-0"

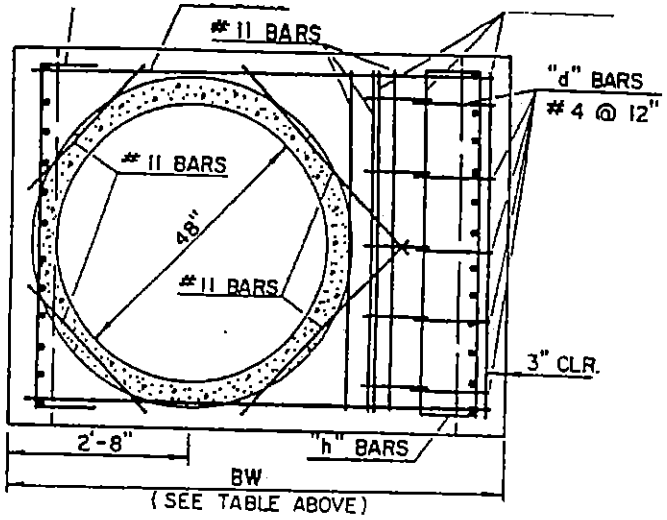


## SLAB REINFORCING

SCALE: 3/8" = 1'-0"

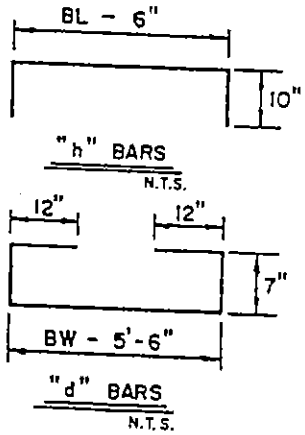


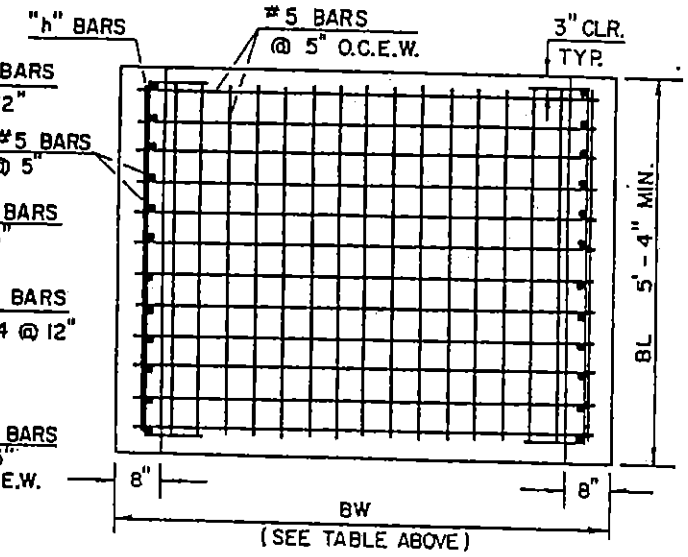


## BASE REINFORCING

SCALE: 3/8" = 1'-0"

NOTES

1. Type I manhole shall be used in all cases unless otherwise approved by the City Engineer.
2. View and Details shown are typical for straight through design only. Design Engineer shall determine manhole base configuration and dimensions for particular pipe sizes and alignment.
3. Either ladder or steps shall be installed when manhole depth exceeds 30". Lowest step shall be a maximum of 16" above the floor.
4. Floor of the manhole shall be trowelled to a smooth, hard surface and shall slope towards the outlet (8:1 max. 1/2" per ft. min.). Floor shall be shaped and channelled; see sheet 2 for typical channel details.

# TYPE I BASE MANHOLE

| CITY OF COLORADO SPRINGS | | | |
|---|---|---|---|
| STORM SEWER MANHOLE-TYPE I | | | |
| APPROVED BY Gary K. Haynes CITY ENGINEER | | | |
| SCALE: AS SHOWN | DATE: JAN 89 | [illegible] | SHEET: D-20 1 OF 4 |

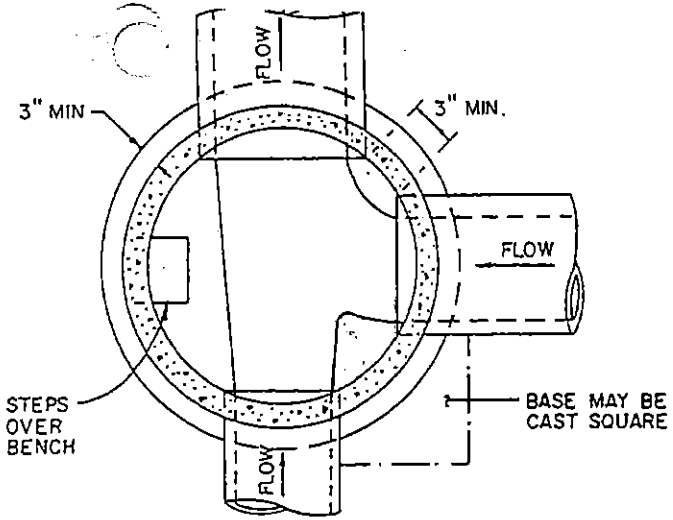


## PLAN VIEW OF BASE

SCALE 3/8" = 1'-0"

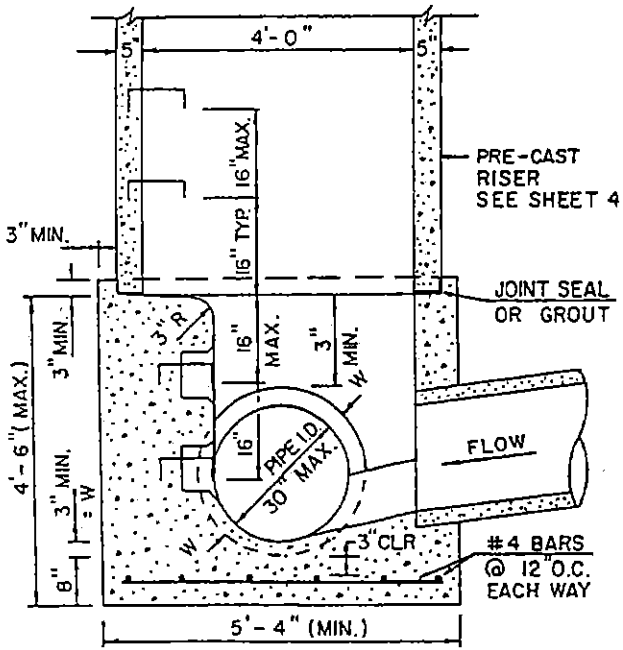


## SECTION VIEW

SCALE 3/8" = 1'-0"

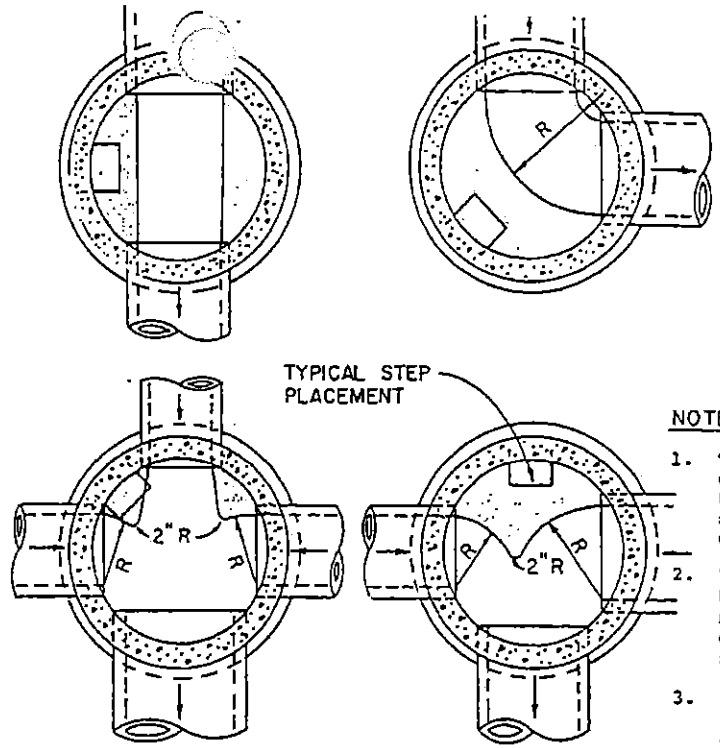


## TYPICAL CHANNEL DETAILS

SCALE 1/4" = 1'-0"

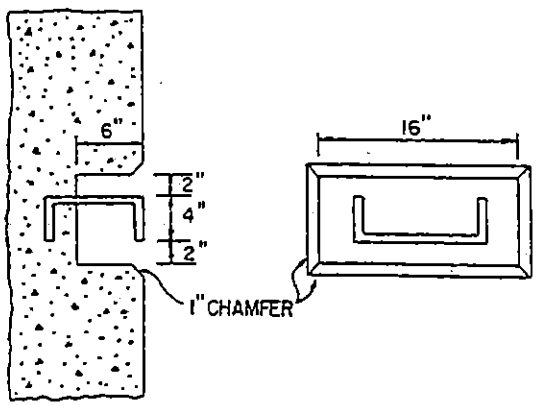


## TOE POCKETS DETAILS

SCALE 3/4" = 1'-0"

NOTES

1. Type II manholes shall be used only with approval of the City Engineer and only when the pipe sizes are 30" or less inside diameter.
2. View and Details are typical. Design Engineer shall determine manhole base configuration and dimensions for particular pipe sizes and alignment.
3. Either ladder or steps shall be installed when manhole depth exceeds 30". Steps in base shall be installed in "toe pockets" (see detail this sheet). Lowest step shall be a maximum of 16" above the floor.
4. Pipes shall be trimmed to final shape and set before manhole is poured.
5. Bench shall be sloped toward center of manhole base (4:1 max., 1/2" per ft. min.).
6. Floor of manhole shall be trowelled to a smooth, hard surface and shall slope towards the outlet (8:1 max., 1/2" per ft. min.). Floor shall be shaped and channelled; see details this sheet.

| CITY OF COLORADO SPRINGS | | | |
|---|---|---|---|
| STORM SEWER MANHOLE-TYPE II | | | |
| APPROVED BY Gary R. Hayes CITY ENGINEER | | | |
| SCALE: AS SHOWN | DATE: JAN. 89 | DRAWN: P.L.B. | SHEET: D-20 B 2 OF 4 |

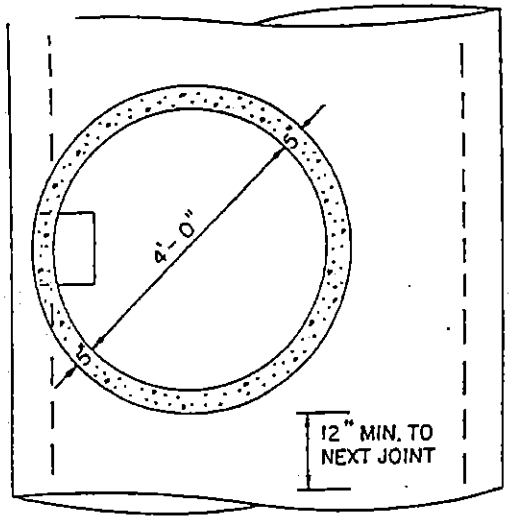


PLAN VIEW
SCALE 3/8" = 1'-0"

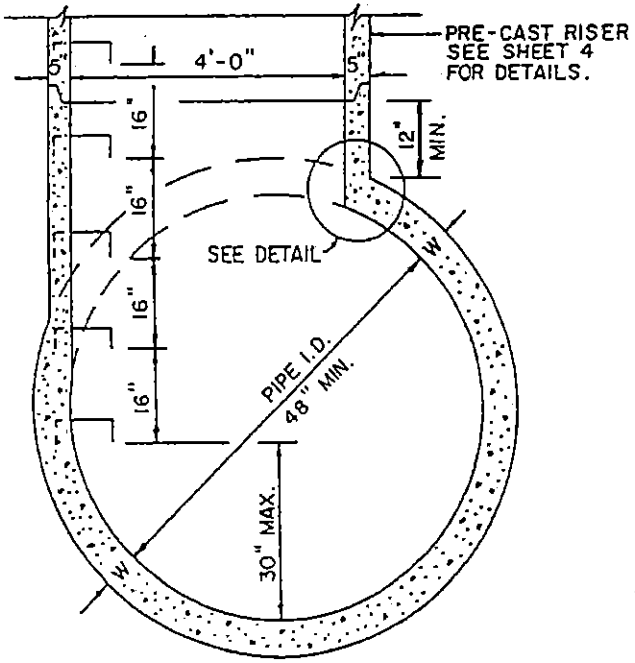


SECTION VIEW
SCALE 3/8" = 1'-0"

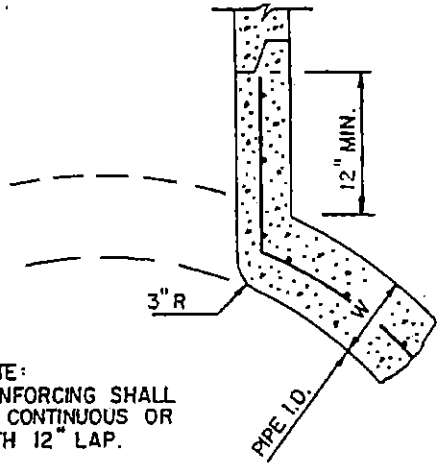


NOTE:
REINFORCING SHALL
BE CONTINUOUS OR
WITH 12" LAP.

R.C.P. CONNECTION DETAIL
SCALE 3/4" = 1'-0"

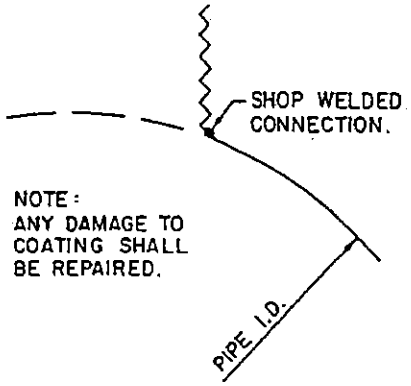


NOTE:
ANY DAMAGE TO
COATING SHALL
BE REPAIRED.

C.S.P. CONNECTION DETAIL
SCALE 3/4" = 1'-0"

NOTES:

1. Type III manholes shall be used only with approval by the City Engineer and only when all of the following conditions are met:
   a. Pipe is 48" or larger inside diameter
   b. No change in pipe size
   c. No change in pipe material
   d. No change in horizontal alignment
   e. Slope is flat and continuous
2. Type III manholes shall be fabricated by the manufacturer/supplier and delivered to the site as a single unit. Field fabrication shall not be permitted.
3. Either ladder or steps shall be installed. Lowest step shall be a maximum of 30" above the invert of the pipe.

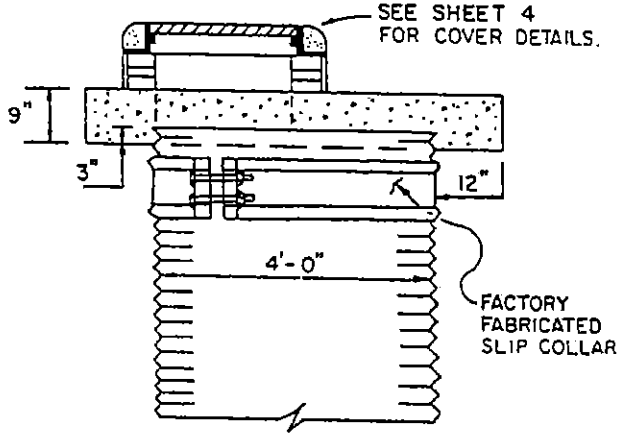


SPECIAL LID FOR USE
WITH C.S.P. RISER.
SCALE 3/8" = 1'-0"

| | | | |
|---|---|---|---|
| CITY OF COLORADO SPRINGS | | | |
| STORM SEWER MANHOLE-TYPE III | | | |
| APPROVED BY Gary R. Haynes CITY ENGINE | | | |
| SCALE: AS SHOWN | DATE: JAN.89 | DRAWN PL.B | SHEET: D-20C 3 OF 4 |

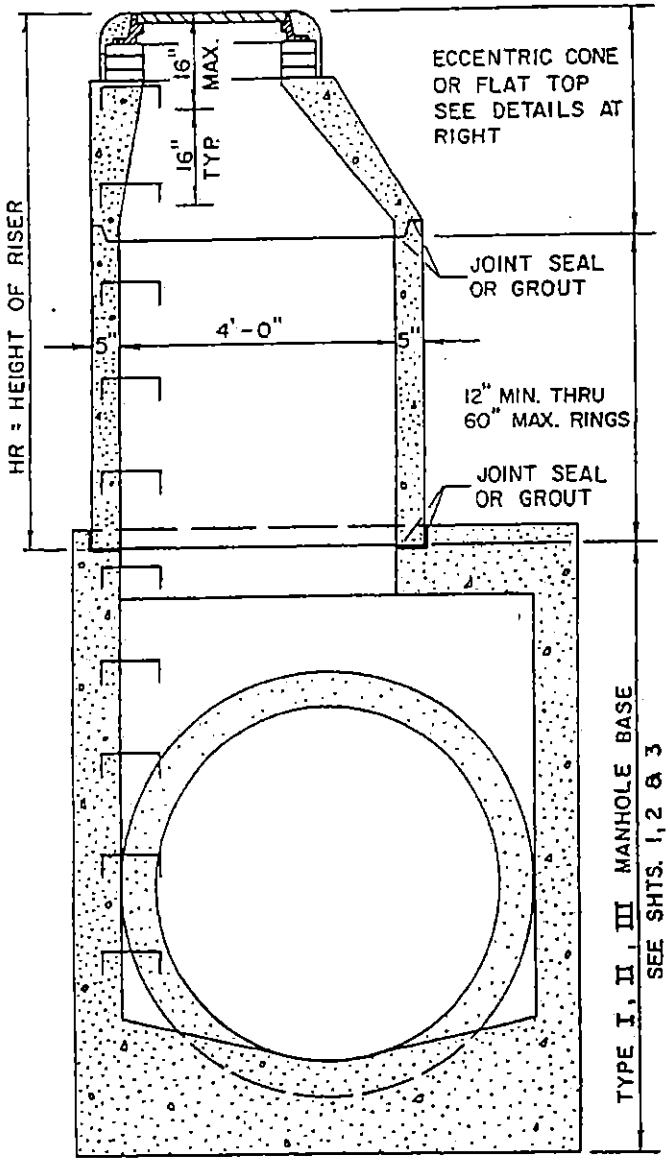


## SECTION VIEW

SCALE: 3/8" = 1'-0"

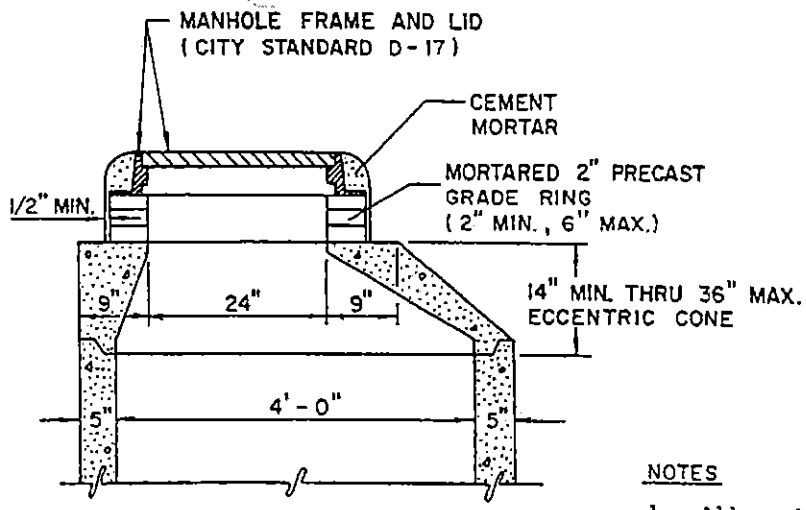


## ECCENTRIC CONE TOP

(FOR HR > 3' ±) SCALE: 1/2" = 1'-0"

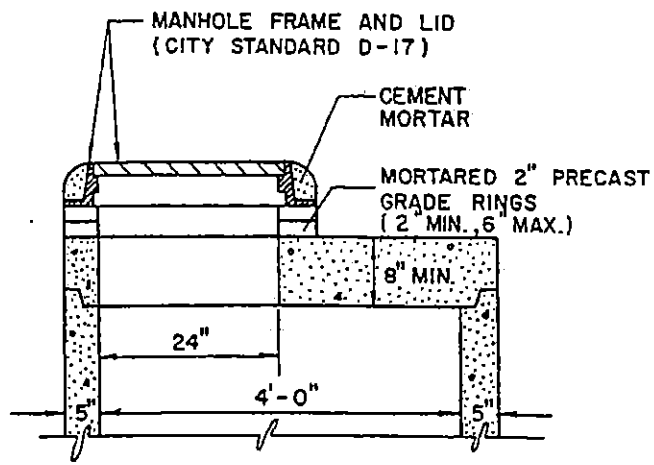


## ECCENTRIC FLAT TOP

(FOR HR < 3' ±) SCALE: 1/2" = 1'-0"

NOTES

1. All work shall be done in accordance with the standard and supplemental specifications applicable to the project.
2. Precast risers shall conform to ASTM C-478.
3. Steps shall be installed when manhole depth exceeds 30". Steps shall be cast iron or extruded aluminum, 1000 lb. capacity, 12" wide with non-skid grooves and drop front on safety noses, in accordance with approved OSHA requirements.

# STORM SEWER MANHOLE PRECA[illegible] RISER

| | | | |
|---|---|---|---|
| CITY OF COLORADO SPRINGS | | | |
| STORM SEWER-COVER & RISER | | | |
| APPROVED BY Gary R. Haynes CITY ENG[illegible] | | | |
| SCALE: | DATE: | DRAWN: | SHEET: D-20[illegible] |

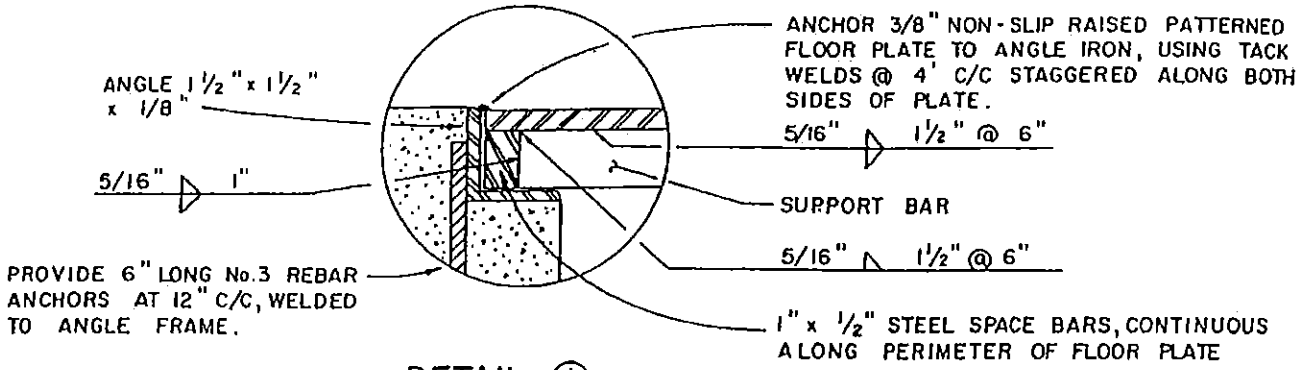


DETAIL ①

| TYPE OF WALK | MIN. TOTAL LENGTH (L) OF PLATE |
|---|---|
| ATTACHED | WALK WIDTH + 10 1/2" |
| DETACHED OR ROADWAYS WITHOUT WALKS | VARIES, HOWEVER ENTIRE CHASE SECTION SHALL BE COVERED WITHIN PUBLIC R.O.W. ( SEE NOTE 5 ) |

| 1" x 3/4" SUPPORT BAR REQUIREMENTS | |
|---|---|
| FLOOR PLATE WIDTH(W) | SUPPORT SPACING(S) |
| 1' | NONE REQUIRED |
| 2' | 60" C/C |
| 3' | 27" C/C |
| 4' | 15" C/C |
| 5' | 10" C/C |
| 6' | 7" C/C |

NOTE: EACH END OF FLOOR PLATE SHALL BE SUPPORTED BY SUPPORT BARS, WHEN SUPPORT BARS ARE SPECIFIED.
CHASE OPENING (C) = W - 2 3/8"

NOTES:

1. ALL EXPOSED METAL TO BE HOT DIPPED ZINC COATED. FIELD WELDS TO BE TOUCH-UP WITH COLD ZINC COATING.
2. WHEN OTHER THAN TYPE I (8") CURB EXISTS, THE CONTRACTOR SHALL REMOVE THE EXISTING CURB TO ALLOW FOR THE REQUIRED TRANSITIONS, AS FOLLOWS: BEGINNING AT THE EDGE OF THE CHASE SECTION, THERE SHALL BE A MINIMUM OF 5 FEET OF TYPE I CURB PLUS 10 FEET OF TRANSITION TO EXISTING CURB TYPE.
3. ALL REMOVAL OF EXISTING CURB SHALL BE BY SAW-CUT, OR BY REMOVAL TO AN EXISTING EXPANSION OR COLD JOINT REMAINING SECTION AFTER SAW CUTTING TO BE MINIMUM 4' IN LENGTH.
4. CHASE SECTION TO BE POURED MONOLITHICALLY WITH CURB & GUTTER SECTION AND CUT-OFF WALL.
5. WHEN CHASE SECTION LENGTH(L) EXCEEDS 15' PROVIDE TOOL JOINT IN CONCRETE AT MAXIMUM OF 10' SPACING FABRICATE FLOOR PLATES IN MULTIPLE SECTION NOT TO EXCEED 10' IN LENGTH.

| CITY OF COLORADO SPRINGS | | | |
|---|---|---|---|
| CURB OPENING DETAIL | | | |
| APPROVED BY Gary R. Haynes CITY ENGINEER | | | |
| SCALE: NO SCALE | DATE: JAN. 89 | DRAWN: P.L.B. | SHEET: D-21 2 OF 2 |

# STANDARD M-603 ATT 1

(SHEET 1 OF 2)
(JANUARY, 1982)

| REVISIONS | | |
|---|---|---|
| | | |
| | | |
| | | |
| | | |

## TABLE I - 2⅔" x ½" CORRUGATIONS
ROUND STEEL PIPE

12" MIN. COVER *

| PIPE DIA. in | HEIGHT OF COVER LIMITS, ft ft — WALL THICKNESS (inches) 0.064 | 0.079 | 0.109 | 0.138 | 0.168 | |
|---|---|---|---|---|---|---|
| ~~[illegible]~~ | ~~[illegible]~~ | ~~[illegible]~~ | ~~[illegible]~~ | ~~[illegible]~~ | ~~[illegible]~~ | ** |
| 15 | 74 | 90 | 100 | 100 | 100 | ** |
| 18 | 61 | 67 | 86 | 90 | 94 | |
| 21 | 53 | 57 | 74 | 77 | 81 | |
| 24 | 46 | 50 | 65 | 68 | 71 | |
| 27 | 41 | 44 | 57 | 60 | 63 | |
| 30 | 37 | 40 | 52 | 54 | 56 | |
| 36 | 30 | 33 | 43 | 45 | 47 | |
| 42 | 34 | 37 | 74 | 77 | 81 | |
| 48 | 30 | 41 | 63 | 68 | 71 | |
| 54 | | 36 | 57 | 60 | 63 | |
| 60 | | | 37 | 54 | 57 | |
| 66 | | | | 49 | 54 | |
| 72 | | | | 45 | 47 | |
| 78 | | | | | 43 | |
| 84 | | | | | 40 | |
| | | | | | | |

## TABLE II - 3" x 1" CORRUGATIONS
ROUND STEEL PIPE

| PIPE DIA. in | MIN. COVER in | HEIGHT OF COVER LIMITS, ft ft — WALL THICKNESS (inches) 0.064 | 0.079 | 0.105 | 0.138 | 0.168 | |
|---|---|---|---|---|---|---|---|
| 36 | 12 | 53 | 66 | 98 | 100 | 100 | ** |
| 42 | 12 | 45 | 56 | 84 | 100 | 100 | ** |
| 48 | 12 | 39 | 49 | 73 | 88 | 98 | |
| 54 | 12 | 35 | 44 | 65 | 78 | 87 | |
| 60 | 12 | 31 | 39 | 58 | 70 | 78 | |
| 66 | 12 | 28 | 36 | 53 | 64 | 71 | |
| 72 | 12 | 26 | 33 | 49 | 58 | 65 | |
| 78 | 12 | 24 | 30 | 45 | 54 | 60 | |
| 84 | 12 | 22 | 28 | 42 | 50 | 56 | |
| 90 | 12 | 21 | 26 | 39 | 47 | 52 | |
| 96 | 12 | | 24 | 36 | 44 | 49 | |
| 102 | 12 | | 23 | 34 | 41 | 46 | |
| 108 | 12 | | | 32 | 39 | 43 | |
| 114 | 12 | | | 30 | 37 | 41 | |
| 120 | 12 | | | 29 | 35 | 39 | |

** COVER ABOVE THAN 50 FT SHALL BE USED ONLY AFTER THOROUGH INVESTIGATION OF FOUNDATION MATERIAL.

## TABLE III - 125mm x 25mm CORRUGATIONS
ROUND STEEL PIPE

| PIPE DIA. in | MIN. COVER in | HEIGHT OF COVER LIMITS, ft ft — WALL THICKNESS (inches) 0.064 | 0.079 | 0.109 | 0.138 | 0.168 |
|---|---|---|---|---|---|---|
| 48 | 12 | 39 | 49 | 73 | 88 | 98 |
| 54 | 12 | 35 | 44 | 65 | 78 | 87 |
| 60 | 12 | 31 | 39 | 58 | 70 | 78 |
| 66 | 12 | 28 | 36 | 53 | 64 | 71 |
| 72 | 12 | 26 | 33 | 49 | 58 | 65 |
| 78 | 12 | 24 | 30 | 45 | 54 | 60 |
| 84 | 12 | 22 | 28 | 42 | 50 | 56 |
| 90 | 12 | 21 | 26 | 39 | 47 | 52 |
| 96 | 12 | | 24 | 36 | 44 | 49 |
| 102 | 18 | | 23 | 34 | 41 | 46 |
| 108 | 18 | | | 32 | 39 | 43 |
| 114 | 18 | | | 30 | 37 | 41 |
| 120 | 18 | | | 29 | 35 | 39 |

## GENERAL NOTES

ALL WORK SHALL BE DONE IN ACCORDANCE WITH THE STANDARD SPECIFICATIONS APPLICABLE TO THE PROJECT.

THE TABLES ON THESE SHEETS SHOW MINIMUM THICKNESS FOR STRUCTURAL REQUIREMENTS ONLY. THEY ARE INTENDED FOR USE ONLY WHERE CORROSIVE AND/OR ABRASIVE CONDITIONS ARE NEGLIGIBLE. HEAVIER METAL AND/OR PROTECTIVE COATINGS SHALL BE USED WHERE SITE INVESTIGATIONS INDICATE CORROSIVE AND/OR ABRASIVE CONDITIONS.

* PIPE-ARCH WITH EQUAL PERIMETER AND WITH SPAN AND RISE DIMENSIONS APPROXIMATELY EQUAL TO THOSE REQUIRED BY PLANS WILL BE PERMITTED.

ADEQUATE COVER SHALL BE PROVIDED DURING CONSTRUCTION TO PROTECT THE STRUCTURE FROM DAMAGE.

PIPE SHALL BE PLACED WITH LONGITUDINAL SEAMS AT THE SHOES OR QUARTER POINTS BUT NOT ALONG TOP OF VERTICAL AXIS.

~~[illegible]~~

WHEN A CULVERT IS TO BE EXTENDED WITH PIPE OF A DIFFERENT MATERIAL, THE CONNECTION SHALL CONFORM TO THE DETAILS ON PLANS OR BE APPROVED.

EXTENSIONS FOR CMP ARCH CULVERT SHALL MATCH THE CORRUGATIONS AND THE SPAN AND RISE DIMENSIONS OF THE CULVERT TO BE EXTENDED.

THE MINIMUM COVER, EXCLUDING PAVEMENT, OVER CORRUGATED METAL PIPE CULVERT SHALL BE AS STATED BY THE ENGINEER, BUT SHALL NOT BE LESS THAN SHOWN IN THE TABLES ON THESE SHEETS.

~~BEDDING AND FOUNDATION SHALL BE IN ACCORDANCE WITH SECTION [illegible]~~

TRENCH INSTALLATION
INSTALLATION AND MAXIMUM FILL HEIGHTS SHALL CONFORM TO THE "M" STANDARD FOR "PIPE SEWER IN TRENCH".

* Top of Pipe to Top of Subgrade

ROUND PIPE — STEEL
PIPE — ARCH — STEEL

## TABLE IV — 2⅔" x ½" CORRUGATIONS
STEEL PIPE-ARCH ①

12" MIN. COVER *

| PIPE SIZE in SPAN | RISE | EQUIV. DIA. in | WALL THICKNESS in. | HEIGHT OF COVER LIMITS, ft ft — CORNER BEARING PRESSURE 2 Tons Per Sq. Ft. CORNER WIDTH | |
|---|---|---|---|---|---|
| 17 | 13 | 15 | 0.064 | 3" | 11 |
| 21 | 15 | 18 | 0.064 | 3" | 9 |
| 24 | 18 | 21 | 0.064 | 3" | 8 |
| 28 | 20 | 24 | 0.064 | 3" | 7 |
| 35 | 24 | 30 | 0.064 | 3" | 5 |
| 42 | 29 | 36 | 0.064 | 3½" | 5 |
| 49 | 33 | 42 | 0.079 | 4" | 5 |
| 57 | 38 | 48 | 0.109 | 5" | 5 |
| 64 | 43 | 54 | 0.109 | 6" | 6 |
| 71 | 47 | 60 | 0.138 | 7" | 4 |
| 77 | 52 | 66 | 0.168 | 8" | 6 |
| 83 | 57 | 72 | 0.168 | 9" | 7 |
| | | | | | |

## TABLE V — 3" x 1" & 125 mm x 25 mm CORRUGATIONS
STEEL PIPE-ARCH ①

| PIPE SIZE in SPAN | RISE | EQUIV. DIA. in | WALL THICKNESS in | * MIN. COVER in | HEIGHT OF COVER LIMITS, ft ft — CORNER BEARING PRESSURE 2 Tons Per Sq. Ft. CORNER WIDTH | |
|---|---|---|---|---|---|---|
| 40 | 31 | 36 | 0.064 | 12 | 5" | 8 |
| 46 | 34 | 42 | 0.064 | 12 | 6" | 8 |
| 53 | 41 | 48 | 0.064 | 12 | 7" | 8 |
| 60 | 46 | 54 | 0.064 | 12 | 8" | 8 |
| 66 | 51 | 60 | 0.064 | 12 | 9" | 9 |
| 73 | 55 | 66 | 0.064 | 12 | 12" | 10 |
| 81 | 59 | 72 | 0.064 | 12 | 14" | 11 |
| 87 | 63 | 78 | 0.064 | 12 | 14" | 10 |
| 95 | 67 | 84 | 0.079 | 12 | 16" | 11 |
| 103 | 71 | 90 | 0.109 | 18 | 16" | 10 |
| 112 | 75 | 96 | 0.109 | 18 | 18" | 10 |
| 117 | 79 | 102 | 0.109 | 18 | 18" | 10 |
| 128 | 83 | 108 | 0.138 | 24 | 18" | 9 |
| 137 | 87 | 114 | 0.138 | 24 | 18" | 8 |
| 142 | 91 | 120 | 0.168 | 24 | 18" | 8 |

① PIPE-ARCH IS INTENDED FOR USE WHERE MINIMUM COVER REQUIREMENTS FOR ROUND PIPE CAN NOT BE MET.
WHEN COVER EXCEEDS 15 FT.—USE ROUND PIPE.

* SEE THIRD GENERAL NOTE.

Adopted from and in conformance with the State of Colorado Department of Highways with Revisions by the City of Colorado Springs Engineering Division

| CITY OF COLORADO SPRINGS | | | |
|---|---|---|---|
| METAL CULVERT PIPE | | | |
| APPROVED BY Gary R. Hayes CITY ENGINEER | | | |
| SCALE: NO SCALE | DATE: JAN. 90 | DRAWN: P.L.B. | SHEET D - 26 |

# STANDARD M-510-1

(SHEET 1 OF 2)
(JANUARY, 1982)

TABLE I — 6" x 2" CORRUGATIONS
ROUND STEEL PIPE

| PIPE DIA. In. | * MIN. COVER In. | HEIGHT OF COVER LIMITS, H ft. — WALL THICKNESS (Inches) 0.109 | 0.138 | 0.140 | 0.168 | 0.218 | 0.249 | 0.280 |
|---|---|---|---|---|---|---|---|---|
| 60 | 12 | 47 | 68 | 90 | 100 | 100 | 100 | 100 |
| 66 | 12 | 43 | 63 | 81 | 93 | 100 | 100 | 100 |
| 72 | 12 | 39 | 57 | 73 | 86 | 100 | 100 | 100 |
| 78 | 12 | 36 | 52 | 69 | 79 | 95 | 100 | 100 |
| 84 | 12 | 34 | 49 | 64 | 73 | 88 | 100 | 100 |
| 90 | 12 | 31 | 45 | 60 | 68 | 82 | 97 | 100 |
| 96 | 12 | 29 | 43 | 56 | 64 | 77 | 91 | 100 |
| 102 | 18 | 28 | 40 | 52 | 60 | 73 | 86 | 94 |
| 108 | 18 | 26 | 38 | 50 | 57 | 69 | 81 | 88 |
| 114 | 18 | 25 | 36 | 47 | 54 | 65 | 77 | 84 |
| 120 | 18 | 23 | 34 | 45 | 51 | 62 | 73 | 80 |
| 126 | 18 | 22 | 32 | 42 | 49 | 59 | 69 | 76 |
| 132 | 18 | 21 | 31 | 40 | 46 | 56 | 66 | 72 |
| 138 | 18 | 20 | 29 | 39 | 44 | 54 | 63 | 69 |
| 144 | 18 | 19 | 28 | 37 | 43 | 51 | 61 | 66 |
| 150 | 24 | 19 | 27 | 36 | 41 | 49 | 58 | 64 |
| 156 | 24 | 18 | 26 | 34 | 39 | 47 | 56 | 61 |
| 162 | 24 | 17 | 25 | 33 | 38 | 46 | 54 | 59 |
| 168 | 24 | 17 | 24 | 32 | 36 | 44 | 52 | 57 |
| 174 | 24 | 16 | 23 | 31 | 35 | 42 | 50 | 55 |
| 180 | 24 | 15 | 22 | 30 | 34 | 41 | 48 | 53 |
| 186 | 24 | 15 | 22 | 29 | 33 | 40 | 47 | 51 |
| 192 | 24 | | 21 | 28 | 32 | 38 | 45 | 50 |
| 198 | 30 | | 20 | 27 | 31 | 37 | 44 | 48 |
| 204 | 30 | | 20 | 26 | 30 | 36 | 43 | 47 |
| 210 | 30 | | 19 | 25 | 29 | 35 | 41 | 45 |
| 216 | 30 | | | 25 | 28 | 34 | 40 | 44 |
| 222 | 30 | | | 24 | 27 | 33 | 39 | 43 |
| 228 | 30 | | | 23 | 27 | 32 | 38 | 42 |
| 234 | 30 | | | 23 | 26 | 31 | 37 | 41 |
| 240 | 30 | | | | 25 | 31 | 36 | 40 |
| 246 | 36 | | | | 25 | 30 | 35 | 39 |
| 252 | 36 | | | | | 29 | 34 | 38 |
| 258 | 36 | | | | | 28 | 34 | 37 |
| 264 | 36 | | | | | 28 | 33 | 36 |
| 270 | 36 | | | | | 27 | 32 | 35 |
| 276 | 36 | | | | | | 31 | 34 |
| 282 | 36 | | | | | | 31 | 34 |
| 288 | 42 | | | | | | 30 | 33 |
| 294 | 42 | | | | | | | 32 |
| 300 | 42 | | | | | | | 32 |
| 306 | 42 | | | | | | | 31 |

TABLE II — 6" x 2" CORRUGATIONS
STEEL PIPE-ARCH ⊕

| PIPE SIZE† FT - IN. SPAN x RISE | * MIN. COVER In. | MIN. WALL THICKNESS In. | HEIGHT OF COVER LIMITS, H ft. — CORNER BEARING PRESSURE 2 Tons Per Sq. Ft. |
|---|---|---|---|
| 6-1 x 4-7 | 12 | 0.109 | 15 |
| 6-4 x 4-9 | 12 | 0.109 | 15 |
| 6-9 x 4-11 | 12 | 0.109 | 14 |
| 7-0 x 5-1 | 12 | 0.109 | 14 |
| 7-3 x 5-3 | 12 | 0.109 | 13 |
| 7-6 x 5-3 | 12 | 0.109 | 13 |
| 7-11 x 5-7 | 12 | 0.109 | 12 |
| 8-2 x 5-9 | 18 | 0.109 | 12 |
| 8-7 x 5-11 | 18 | 0.109 | 11 |
| 8-10 x 6-1 | 18 | 0.109 | 11 |
| 9-4 x 6-3 | 18 | 0.109 | 10 |
| 9-6 x 6-5 | 18 | 0.109 | 10 |
| 9-9 x 6-7 | 18 | 0.109 | 10 |
| 10-3 x 6-9 | 18 | 0.109 | 9 |
| 10-6 x 6-11 | 18 | 0.109 | 9 |
| 10-11 x 7-1 | 18 | 0.109 | 9 |
| 11-3 x 7-3 | 18 | 0.109 | 8 |
| 11-7 x 7-5 | 18 | 0.109 | 8 |
| 11-10 x 7-7 | 18 | 0.109 | 7 |
| 12-4 x 7-9 | 30 | 0.109 | 6 |
| 12-6 x 7-11 | 30 | 0.109 | 6 |
| 12-8 x 8-1 | 30 | 0.109 | 6 |
| 12-10 x 8-4 | 30 | 0.109 | 6 |
| 13-3 x 8-4 | 30 | 0.109 | 13 |
| 13-4 x 9-4 | 30 | 0.109 | 12 |
| 14-0 x 9-8 | 30 | 0.109 | 12 |
| 14-2 x 9-10 | 30 | 0.109 | 12 |
| 14-5 x 10-0 | 30 | 0.109 | 11 |
| 14-11 x 10-2 | 30 | 0.109 | 11 |
| 15-4 x 10-4 | 30 | 0.109 | 11 |
| 15-7 x 10-6 | 30 | 0.109 | 11 |
| 15-10 x 10-8 | 30 | 0.109 | 10 |
| 16-3 x 10-10 | 30 | 0.138 | 10 |
| 16-6 x 11-0 | 30 | 0.138 | 10 |
| 17-0 x 11-2 | 30 | 0.138 | 10 |
| 17-2 x 11-4 | 30 | 0.138 | 10 |
| 17-5 x 11-6 | 30 | 0.138 | 9 |
| 17-11 x 11-8 | 30 | 0.138 | 9 |
| 18-1 x 11-10 | 30 | 0.168 | 9 |
| 18-7 x 12-0 | 30 | 0.168 | 9 |
| 18-9 x 12-2 | 30 | 0.168 | 9 |
| 19-3 x 12-4 | 30 | 0.168 | 8 |
| 19-6 x 12-6 | 30 | 0.168 | 8 |
| 19-8 x 12-8 | 30 | 0.168 | 7 |
| 19-11 x 12-10 | 30 | 0.168 | 7 |
| 20-5 x 13-0 | 36 | 0.168 | 7 |
| 20-7 x 13-2 | 36 | 0.168 | 6 |

18" 31"

CORNER ARCH

* — TOP OF PIPE TO TOP OF SUBGRADE.

⊕ — PIPE-ARCH IS WITHDRAWN FOR USE WHERE MINIMUM COVER REQUIREMENTS FOR ROUND PIPE CAN NOT BE MET. USE ROUND PIPE WHEN COVER EXCEEDS 15 FEET.

H — HEIGHT OF COVER LIMIT, IN FEET, MAXIMUM HEIGHT OF FILL TOP OF CULVERT, INCLUDING PAVEMENT.

## GENERAL NOTES

ALL WORK SHALL BE DONE IN ACCORDANCE WITH THE STANDARD SPECIFICATIONS APPLICABLE TO THE PROJECT.

PIPE OR PIPE-ARCH WITH ENDS CUT TO FIT A SLOPE, SHALL BE REINFORCED AND THE DETAILS SHALL BE AS SHOWN ON THE LAYOUT FOR THE STRUCTURE ON THE PLANS.

WHERE MULTIPLE PIPES ARE USED, THEY SHALL BE SPACED SO THAT ADJACENT SIDES OF THE PIPE SHALL BE AT LEAST ONE-HALF DIAMETER OR ONE-HALF SPAN APART TO PERMIT COMPLETE TAMPING OF THE BACKFILL MATERIAL, EXCEPT THAT THE CLEAR DISTANCE BETWEEN ADJACENT SIDES NEED NOT BE MORE THAN 3 FEET.

DURING CONSTRUCTION, ADEQUATE COVER SHALL BE PROVIDED TO PROTECT THE STRUCTURE FROM DAMAGE.

COVER GREATER THAN 100 FEET SHALL BE USED ONLY WITH THOROUGH INVESTIGATION OF FOUNDATION MATERIAL.

† — PIPE-ARCH WITH EQUAL PERIMETER AND WITH SPAN AND RISE DIMENSIONS APPROXIMATELY EQUAL TO TO THOSE REQUIRED BY PLANS WILL BE PERMITTED.

PIPE OR PIPE-ARCH IN ACCORDANCE WITH SECTION 603 SHALL NOT BE SUBSTITUTED FOR STRUCTURAL PLATE PIPE OR PIPE-ARCH.

Adopted from and in conformance with the State of Colorado Department of Highways with Revisions by the City of Colorado Springs Engineering Division

| | | | |
|---|---|---|---|
| CITY OF COLORADO SPRINGS | | | |
| STRUCTURAL PLATE CULVERT PIPE | | | |
| APPROVED BY Gary L. Haynes CITY ENGINEER | | | |
| SCALE: NO SCALE | DATE: JAN. 9[illegible] | | SHEET D - 27 |

Adopted from and in conformance with the State of Colorado Department of Highways with Revisions by the City of Colorado Springs Engineering Division

# STANDARD M-603-10

(JANUARY, 1982)

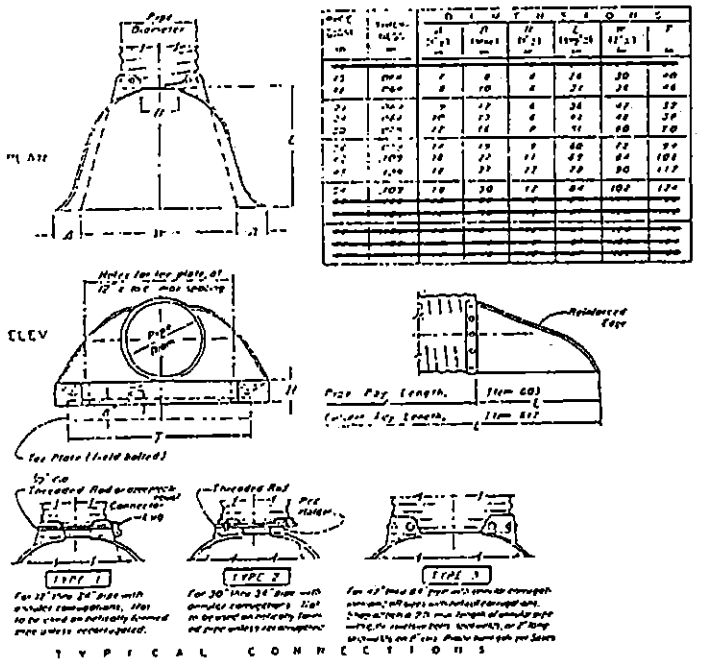


END SECTION AND CONNECTION DETAILS FOR ROUND CORRUGATED METAL PIPE CULVERTS

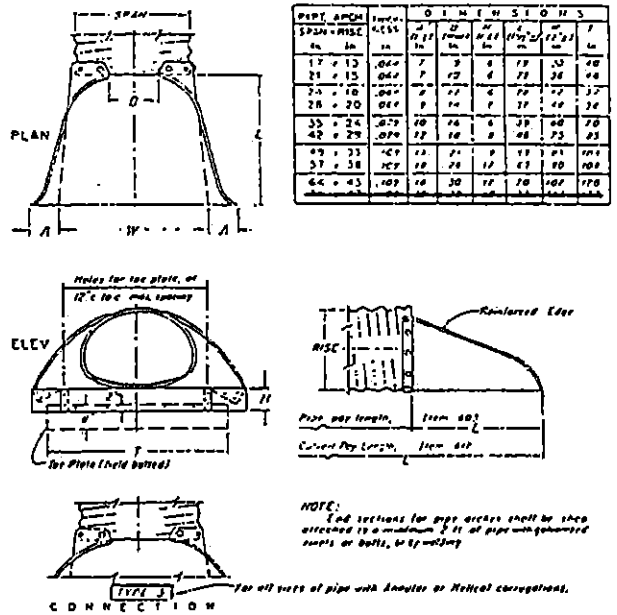


END SECTION AND CONNECTION DETAIL FOR CORRUGATED METAL PIPE ARCH CULVERT

## GENERAL NOTES

All work shall be done in accordance with the Standard Specifications contained in the project.

Concrete End Sections are to be furnished with tongue or groove as used [illegible]

[illegible] Design length of culvert is based on length of End Section shown on plans. Additional pipe required to provide the design length of the culvert shall be furnished by and at the expense of the Contractor.

Other sizes of concrete pipe and end sections may be available upon request, however, the designer should contact supplier prior to setting for sizes other than those shown on this standard.

Invert configuration and joint of concrete and metal end sections and pipe shall match.

End sections for CMP Arch Culvert shall match the dimensions of the culvert shown on plans.

Galvanized Toe Plate as shown will be required on End Sections for corrugated steel pipe and shall be same thickness as End Sections. Toe Plate shall be field bolted to End Section with ½" galvanized bolts, nuts and washers.

[illegible] Designs for Aluminum End Sections for corrugated aluminum culvert [illegible]

Concrete Pipe Joint Fasteners [illegible] shall be installed so that a minimum of 15 linear feet of the outlet end of the pipe are mechanically locked together. End Section lengths, when used, will be included in the 15'-0" requirement.

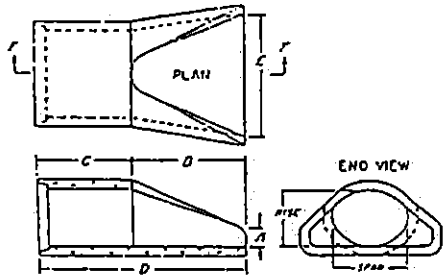


END SECTION FOR REINFORCED CONCRETE ELLIPTICAL PIPE

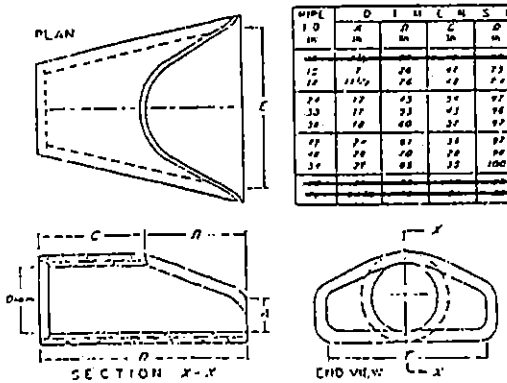


END SECTION FOR REINFORCED CONCRETE CIRCULAR PIPE

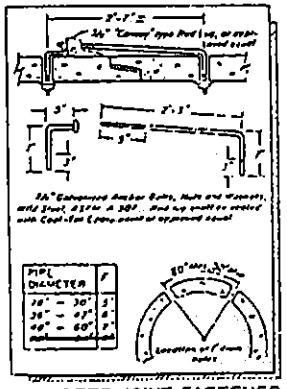

CONCRETE JOINT FASTENER

CITY OF COLORADO SPRINGS

CONCRETE AND METAL END SECTIONS

APPROVED BY [signature] CITY ENGINEER

| SCALE: | DATE: | DRAWN: | SHEET |
|---|---|---|---|
| NO SCALE | JAN. 90 | P.L.B. | D-28 |

Adopted from and in conformance with the State of Colorado Department of Highways with Revisions by the City of Colorado Springs Engineering Division

*Depth of toe wall to be increased if required by scour potential. Indicate dimension on plan.

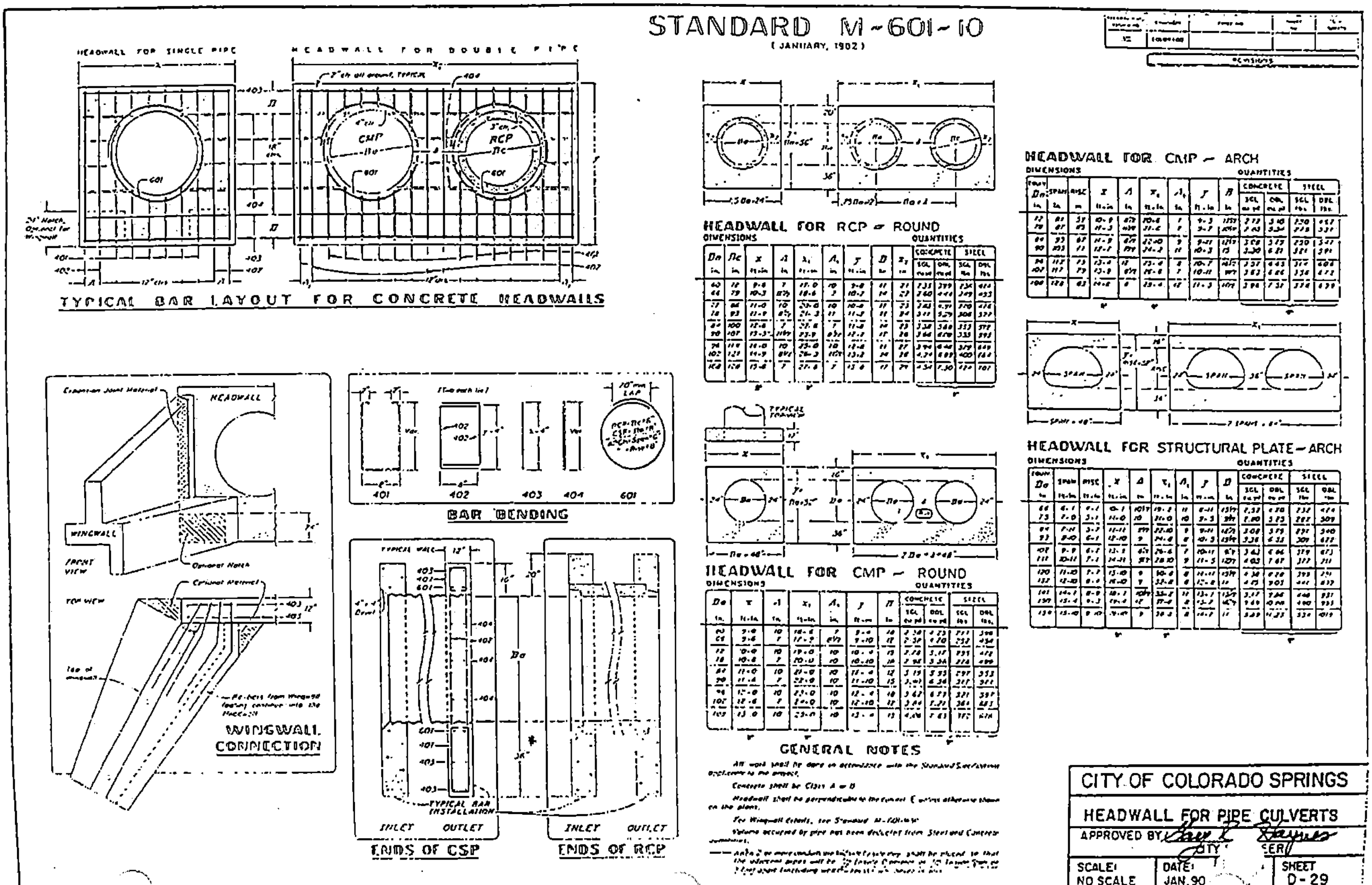

SOUFCE: AMERICAN CONCRETE PIPE ASSOCIATION

# RENCH BEDDING CLASSIFICATION - ROUND PRECAST CONCRETE PIPE

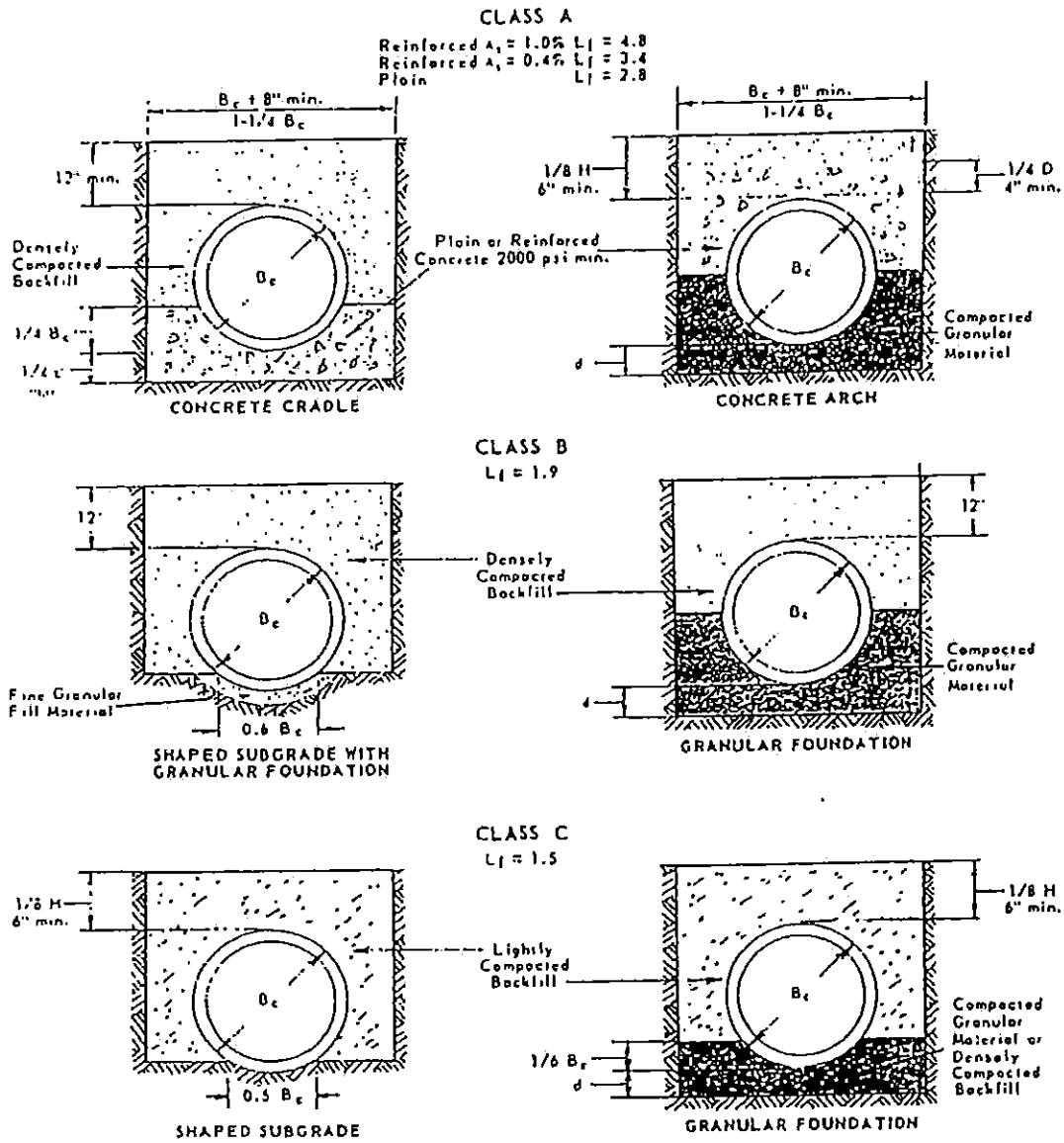


Depth of Bedding Material Below Pipe

| D | d (min.) |
|---|---|
| 27" & smaller | 3" |
| 30" to 60" | 4" |
| 66" & larger | 6" |

*Legend*

$B_c$ = outside diameter
H = backfill cover above top of pipe
D = inside diameter
d = depth of bedding material below pipe
$A_s$ = area of transverse steel in the cradle or arch expressed as a percentage of area of concrete at invert or crown.

Notes:

For Class B and C beddings, subgrades should excavated or over excavated, if necessary, a uniform foundation free of protruding cks may be provided.

Special care may be necessary with Class A or other unyielding foundations to cushion pipe from shock when blasting can be anticipated in the area.

| CITY OF COLORADO SPRINGS | | | |
|---|---|---|---|
| TRENCH BEDDING CLASSIFICATION | | | |
| APPROVED BY Gary R. Haynes CITY ENGINEER | | | |
| SCALE: NO SCALE | DATE: JAN. 90 | DRAWN: P.L.B. | SHEET D - 30 |

SOURCE: AMERICAN CONCRETE PIPE ASSOCIATION

# TRENCH BEDDING CLASSIFICATION - PRECAST CONCRETE SECTIONS

## HORIZONTAL ELLIPTICAL PIPE

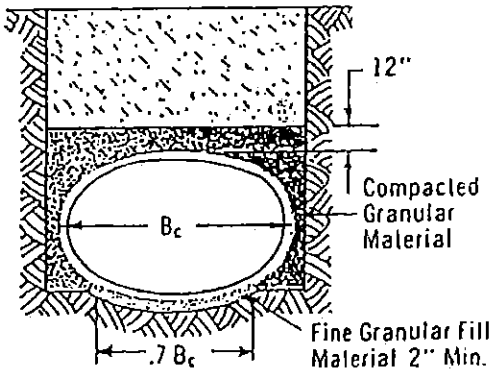


CLASS B
$l_1$=1.9

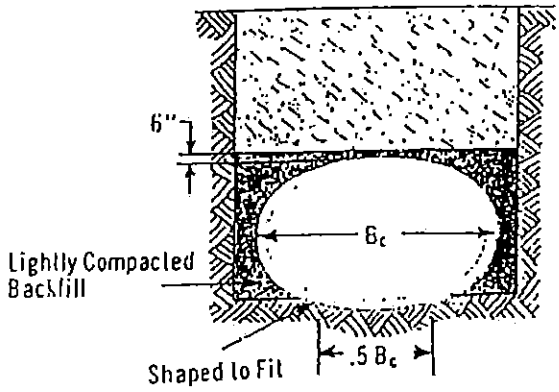


CLASS C
$l_1$=1.5

## VERTICAL ELLIPTICAL PIPE

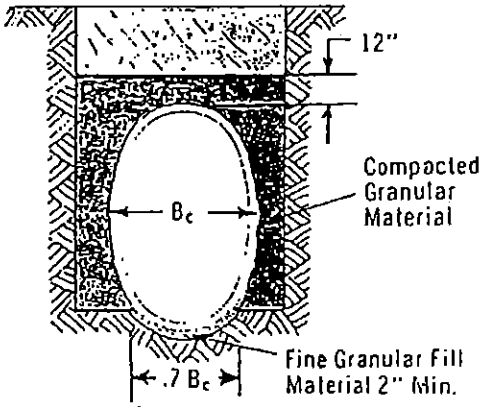


CLASS B
$l_1$=1.9

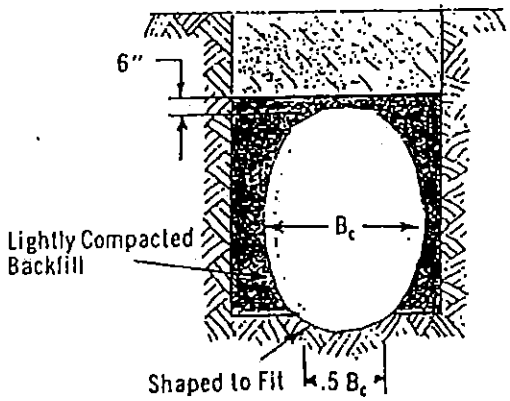


CLASS C
$l_1$=1.5

## PRECAST BOX SECTION

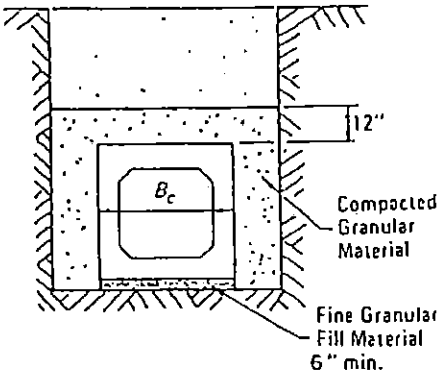


CLASS B

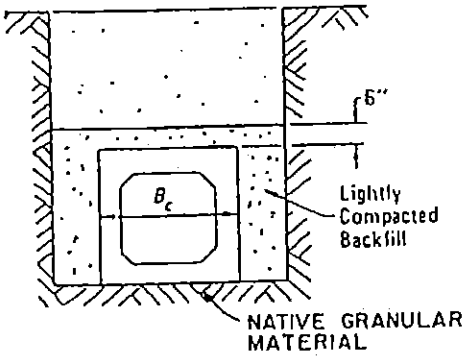


CLASS C

| CITY OF COLORADO SPRING | | | |
|---|---|---|---|
| TRENCH BEDDING CLASSIFICATION | | | |
| APPROVED BY [signature] CITY ENGINEER | | | |
| SCALE: NO SCALE | DATE: JAN. 90 | DRAWN: P.L.B. | SHEET D-31 |

SOURCE: ASTM A-798 "INSTALLING FACTORY-MADE CORRUGATED STEEL SEWER PIPE.
ASTM D-2321 UNDERGROUND INSTALLATION OF FLEXIBLE THERMOPLASTIC SEWER PIPE.

# TRENCH BEDDING FOR FLEXIBLE PIPE

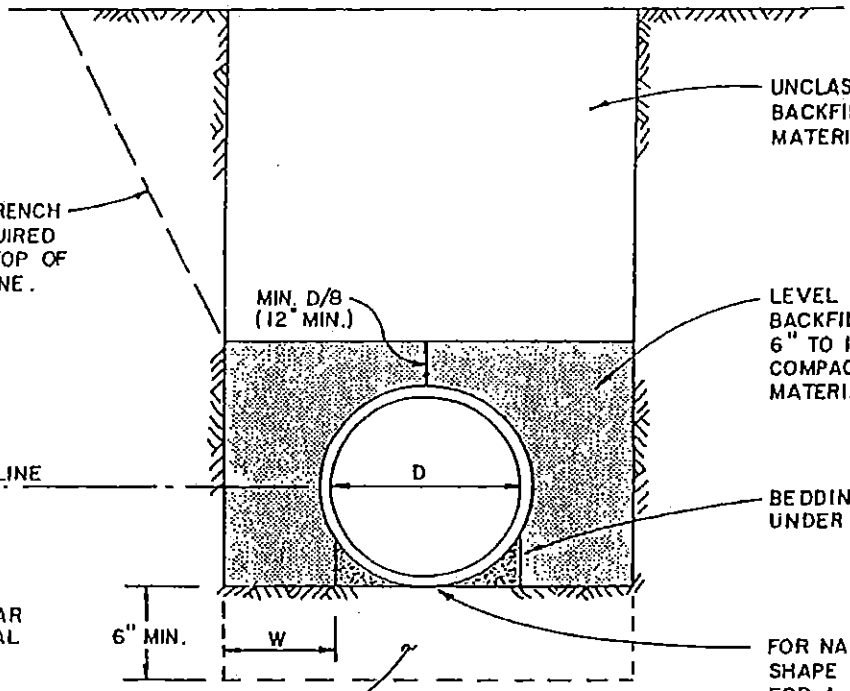


## ORDINARY TRENCH CONDITION

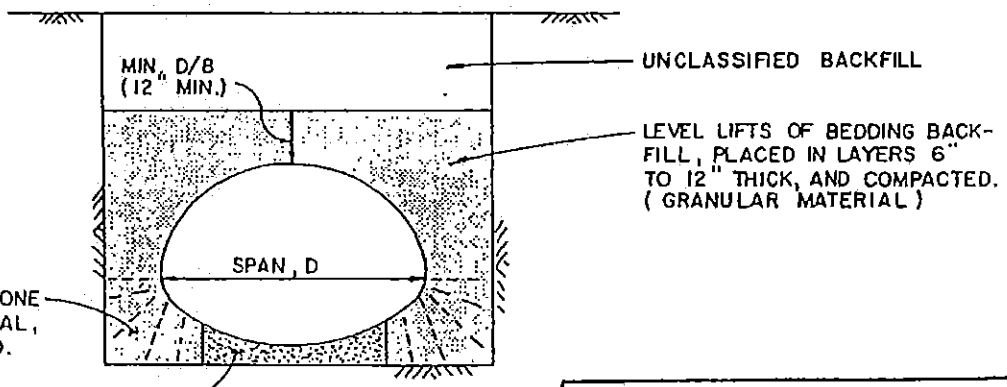


## SHAPED BEDDING

(PIPE - ARCH)

| CITY OF COLORADO SPRINGS | | | |
|---|---|---|---|
| TRENCH BEDDING FOR FLEXIBLE PIPE | | | |
| APPROVED BY Gary R. Hayes CITY ENGINEER | | | |
| SCALE: NO SCALE | DATE: JAN. 90 | DRAWN: P.L.B. | SHEET D-32 |

Adopted from and in conformance with the State of Colorado Department of Highways with Revisions by the City of Colorado Springs Engineering Division

*Depth of toe wall to be increased if required by scour potential. Indicate dimension on plan.

# STANDARD M-601-1

(JANUARY, 1982)

## I-BARS (Cont)

| SPAN S | HEADWALL SKEW ANGLE 30° to 75° | 74° to 60° | 59° to 45° |
|---|---|---|---|
| 2' or 6' | #4 | #4 | #5 |
| 7' to 11' | #4 | #5 | #6 |
| 12' and 13' | #5 | #6 | #7 |
| 14' to 17' | #6 | #7 | #8 |
| 18' and 19' | #7 | #8 | #9 |

Six I-bars required for each headwall.

## HEADWALL & TOEWALL QUANTITIES

| I-BAR SIZE | common quantity for one wingwall & toewall LBS PER LINEAL FT |
|---|---|
| 4 | 13 |
| 5 | 15 |
| 6 | 18 |
| 7 | 21 |
| 8 | 23 |
| 9 | 27 |

Concrete = 0.083 cu yd/lin ft

Includes all Headwall and Toewall reinforcing

* Deduct 0.049 cu yd Concrete and 3.4 lb Reinf Steel from these quantities when Concrete Apron specified.

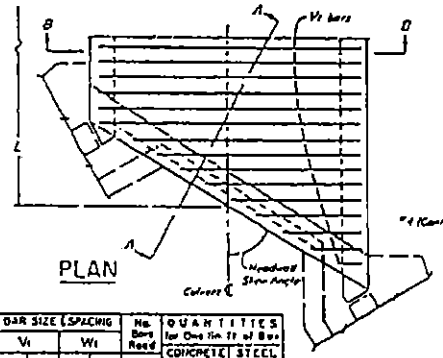


PLAN

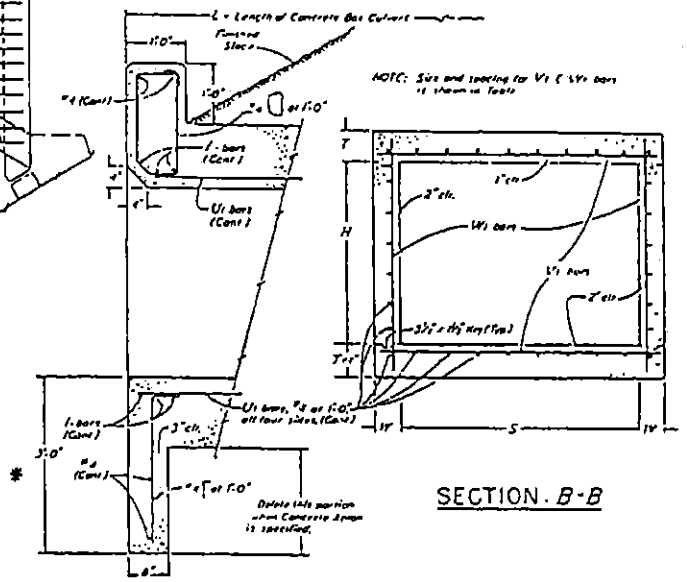


SECTION A-A

SECTION B-B

## DIMENSIONS & QUANTITIES

| HEIGHT OF FILL ALLOWED ft. | TYPE | SPAN S | HEIGHT H | SLAB T | WALL W | BAR SIZE & SPACING Vi Size | Vi Spa. | Wi Size | Wi Spa. | No. Bars Req'd Ui | QUANTITIES for One lin ft of Box CONCRETE cu yds. | STEEL lbs. |
|---|---|---|---|---|---|---|---|---|---|---|---|---|
| 16 | 5A | 5' | 3' | 8" | 8" | #6 | 8" | #4 | 8" | 18 | 0.481 | 45.3 |
| | | | 4' | | | | | | | 18 | 0.518 | 48.7 |
| | | | 5' | | | | | | | 20 | 0.575 | 57.0 |
| 20 | 5B | 5' | 3' | 8½" | 8" | #6 | 8" | #4 | 8" | 18 | 0.500 | 45.3 |
| | | | 4' | | | | | | | 18 | 0.548 | 48.8 |
| | | | 5' | | | | | | | 20 | 0.598 | 57.7 |
| 14 | 6A | 6' | 3' | 8½" | 8" | #6 | 8" | #4 | 8" | 20 | 0.605 | 54.7 |
| | | | 4' | | | | | | | 22 | 0.655 | 59.7 |
| | | | 5' | | | | | | | 24 | 0.700 | 61.6 |
| | | | 6' | | | | | | | 26 | 0.753 | 64.5 |
| 20 | 6B | 6' | 3' | 10" | 8" | #7 | 8" | #5 | 8" | 20 | 0.671 | 72.4 |
| | | | 4' | | | | | | | 22 | 0.740 | 76.5 |
| | | | 5' | | | | | | | 24 | 0.777 | 87.0 |
| | | | 6' | | | | | | | 26 | 0.840 | 85.9 |
| 12 | 7A | 7' | 3' | 9" | 9" | #6 | 7" | #4 | 7" | 22 | 0.720 | 64.5 |
| | | | 4' | | | | | | | 24 | 0.774 | 71.9 |
| | | | 5' | | | | | | | 26 | 0.833 | 71.9 |
| | | | 6' | | | | | | | 28 | 0.887 | 77.5 |
| 15 | 7B | 7' | 3' | 10" | 9" | #7 | 8" | #5 | 8" | 22 | 0.772 | 81.0 |
| | | | 4' | | | | | | | 24 | 0.827 | 87.5 |
| | | | 5' | | | | | | | 26 | 0.883 | 90.0 |
| | | | 6' | | | | | | | 28 | 0.934 | 94.3 |
| 20 | 7C | 7' | 3' | 11" | 9" | #7 | 7" | #5 | 7" | 22 | 0.824 | 91.1 |
| | | | 4' | | | | | | | 24 | 0.881 | 94.0 |
| | | | 5' | | | | | | | 26 | 0.917 | 101.0 |
| | | | 6' | | | | | | | 28 | 0.971 | 108.0 |
| 10 | 8A | 8' | 3' | 9½" | 10" | #6 | 7" | #4 | 7" | 24 | 0.844 | 72.4 |
| | | | 4' | | | | | | | 26 | 0.903 | 79.3 |
| | | | 5' | | | | | | | 28 | 0.962 | 85.4 |
| | | | 6' | | | | | | | 30 | 1.017 | 88.4 |
| | | | 7' | | | | | | | 32 | 1.069 | 90.3 |
| 16 | 8B | 8' | 3' | | | | | | | 24 | 0.947 | 100.9 |
| | | | 4' | 11½" | 10" | #7 | 7" | #5 | 7" | 26 | 1.015 | 107.9 |
| | | | 5' | | | | | | | 28 | 1.069 | 110.6 |
| | | | 6' | | | | | | | 30 | 1.124 | 113.8 |
| | | | 7' | | | | | | | 32 | 1.210 | 120.8 |
| 20 | 8C | 8' | 3' | | | | | | | 24 | 1.023 | 113.6 |
| | | | 4' | 12½" | 10" | #7 | 6" | #5 | 6" | 26 | 1.084 | 122.4 |
| | | | 5' | | | | | | | 28 | 1.146 | 126.9 |
| | | | 6' | | | | | | | 30 | 1.204 | 132.5 |
| | | | 7' | | | | | | | 32 | 1.270 | 138.1 |
| 7 | 9A | 9' | 3' | | | | | | | 26 | 1.040 | 102.7 |
| | | | 4' | 10" | 11" | #7 | 8" | #5 | 8" | 30 | 1.106 | 107.1 |
| | | | 5' | | | | | | | 32 | 1.174 | 111.8 |
| | | | 6' | | | | | | | 34 | 1.242 | 116.5 |
| | | | 7' | | | | | | | 36 | 1.311 | 120.7 |
| 14 | 9B | 9' | 3' | | | | | | | 28 | 1.116 | 123.9 |
| | | | 4' | 12" | 11" | #7 | 8" | #5 | 8" | 30 | 1.206 | 131.1 |
| | | | 5' | | | | | | | 32 | 1.276 | 137.2 |
| | | | 6' | | | | | | | 34 | 1.340 | 141.7 |
| | | | 7' | | | | | | | 36 | 1.416 | 146.8 |
| 20 | 9C | 9' | 3' | | | | | | | 28 | 1.209 | 130.6 |
| | | | 4' | 14" | 11" | #8 | 7" | #6 | 7" | 30 | 1.307 | 137.3 |
| | | | 5' | | | | | | | 32 | 1.402 | 143.3 |
| | | | 6' | | | | | | | 34 | 1.511 | 150.0 |
| | | | 7' | | | | | | | 36 | 1.583 | 154.6 |
| 5 | 10A | 10' | 3' | | | | | | | 32 | 1.440 | 137.1 |
| | | | 4' | 10½" | 12" | #7 | 8" | #4 | 8" | 34 | 1.534 | 141.0 |
| | | | 5' | | | | | | | 36 | 1.640 | 144.4 |
| | | | 6' | | | | | | | 38 | 1.745 | 151.3 |
| | | | 7' | | | | | | | 40 | 1.854 | 151.7 |

| HEIGHT OF FILL ALLOWED ft. | TYPE | SPAN S | HEIGHT H | SLAB T | WALL W | BAR SIZE & SPACING Vi Size | Vi Spa. | Wi Size | Wi Spa. | No. Bars Req'd Ui | QUANTITIES for One lin ft of Box CONCRETE cu yds. | STEEL lbs. |
|---|---|---|---|---|---|---|---|---|---|---|---|---|
| 10 | 10B | 10' | 3' | | | | | | | 32 | 1.269 | 130.7 |
| | | | 4' | 12" | 12" | #7 | 7" | #5 | 7" | 34 | 1.371 | 133.2 |
| | | | 5' | | | | | | | 36 | 1.511 | 140.2 |
| | | | 6' | | | | | | | 38 | 1.651 | 147.3 |
| | | | 7' | | | | | | | 40 | 1.843 | 150.3 |
| 16 | 10C | 10' | 3' | | | | | | | 36 | 1.318 | 150.7 |
| | | | 4' | 14" | 12" | #8 | 8" | #6 | 8" | 38 | 1.535 | 154.6 |
| | | | 5' | | | | | | | 38 | 1.648 | 162.2 |
| | | | 6' | | | | | | | 38 | 1.761 | 169.7 |
| | | | 7' | | | | | | | 40 | 1.915 | 174.3 |
| 5 | 11A | 11' | 3' | | | | | | | 36 | 1.387 | 124.8 |
| | | | 4' | 11" | 12" | #7 | 7" | #4 | 7" | 38 | 1.491 | 127.6 |
| | | | 5' | | | | | | | 38 | 1.595 | 133.5 |
| | | | 6' | | | | | | | 40 | 1.749 | 135.4 |
| | | | 7' | | | | | | | 42 | 1.884 | 139.7 |
| 9 | 11B | 11' | 3' | | | | | | | 38 | 1.490 | 140.3 |
| | | | 4' | 12½" | 12" | #8 | 8" | #5 | 8" | 38 | 1.596 | 143.6 |
| | | | 5' | | | | | | | 38 | 1.704 | 152.3 |
| | | | 6' | | | | | | | 40 | 1.873 | 161.0 |
| | | | 7' | | | | | | | 42 | 1.981 | 166.4 |
| 13 | 11C | 11' | 3' | | | | | | | 38 | 1.608 | 159.9 |
| | | | 4' | 14" | 12" | #7 | 6" | #5 | 6" | 38 | 1.745 | 163.5 |
| | | | 5' | | | | | | | 38 | 1.754 | 170.7 |
| | | | 6' | | | | | | | 40 | 1.930 | 176.7 |
| | | | 7' | | | | | | | 42 | 1.904 | 181.9 |
| 5 | 12A | 12' | 3' | | | | | | | 38 | 1.593 | 131.4 |
| | | | 4' | 13" | 12" | #7 | 7" | #4 | 7" | 38 | 1.699 | 144.0 |
| | | | 5' | | | | | | | 40 | 1.853 | 147.1 |
| | | | 6' | | | | | | | 42 | 1.967 | 148.4 |
| | | | 7' | | | | | | | 44 | 1.981 | 157.0 |
| 10 | 12B | 12' | 3' | | | | | | | 38 | 1.697 | 177.7 |
| | | | 4' | 14" | 12" | #8 | 7" | #5 | 7" | 38 | 1.755 | 183.7 |
| | | | 5' | | | | | | | 40 | 1.898 | 187.1 |
| | | | 6' | | | | | | | 42 | 1.930 | 192.8 |
| | | | 7' | | | | | | | 44 | 2.179 | 197.8 |
| 4 | 13A | 13' | 3' | | | | | | | 38 | 1.849 | 144.0 |
| | | | 4' | 12½" | 12" | #7 | 7" | #5 | 7" | 40 | 1.918 | 139.7 |
| | | | 5' | | | | | | | 42 | 1.974 | 133.3 |
| | | | 6' | | | | | | | 44 | 1.862 | 137.0 |
| | | | 7' | | | | | | | 48 | 1.942 | 140.7 |
| 8 | 13B | 13' | 3' | | | | | | | 38 | 1.789 | 144.4 |
| | | | 4' | 14" | 12" | #8 | 7" | #5 | 7" | 40 | 1.861 | 147.3 |
| | | | 5' | | | | | | | 42 | 1.915 | 148.1 |
| | | | 6' | | | | | | | 44 | 2.014 | 151.1 |
| | | | 7' | | | | | | | 48 | 2.083 | 198.1 |
| 4 | 14A | 14' | 3' | | | | | | | 40 | 1.857 | 177.2 |
| | | | 4' | 13½" | 12" | #8 | 8" | #5 | 8" | 42 | 1.901 | 181.7 |
| | | | 5' | | | | | | | 44 | 1.975 | 186.7 |
| | | | 6' | | | | | | | 46 | 2.079 | 196.7 |
| | | | 7' | | | | | | | 48 | 2.183 | 193.8 |
| 8 | 14B | 14' | 3' | | | | | | | 40 | 2.073 | 199.3 |
| | | | 4' | 15" | 12" | #8 | 7" | #5 | 7" | 42 | 2.049 | 204.3 |
| | | | 5' | | | | | | | 44 | 2.173 | 209.4 |
| | | | 6' | | | | | | | 46 | 2.198 | 214.4 |
| | | | 7' | | | | | | | 48 | 2.210 | 219.4 |

## GENERAL NOTES

All work shall be done in accordance with the Standard Specifications applicable to the project.

All concrete shall be Class "A" (Box Culvert).

All construction joints shall be thoroughly cleaned before fresh concrete is poured.

Construction joints shall be spaced at 35 foot max centers and shall extend through the entire cross section of the Box Culvert.

Splice quantities for longitudinal bars are not included.

DESIGN DATA: AASHTO, 1977
Unit Stresses: $f_c$ = 20,000 psi
$f_s$ = 1,700 psi
n = 10

DESIGN CRITERIA:
Culvert in trench on unyielding subsoil, or culvert surrounded or placing foundation. For culverts on piles or rock foundations, special design will be required.

LOADING DATA:
Live Load = AASHTO, HS 20-44
Dead Load = Earth Load = 60 lbs/cu ft
Equivalent Fluid Pressure = 30 lbs/sq ft

The maximum splice length for common bar sizes shall be:

| BAR SIZE | #4 | #5 | #6 | #7 | #8 | #9 |
|---|---|---|---|---|---|---|
| SPLICE LENGTH (in) | 1'-0" | 1'-4" | 1'-8" | 2'-0" | 2'-8" | 3'-0" |

All exposed corners on concrete shall be chamfered ¾".

| REVISION NOTE NUMBER | DESCRIPTION | PROJECT NO | SHEET NO | DATE |
|---|---|---|---|---|
| 10 | CORRECTION | | | |

REVISIONS

CITY OF COLORADO SPRINGS
SINGLE CONCRETE BOX CULVERT
APPROVED BY: [signature]
SCALE: NO SCALE
DATE: FEB. 6
SHEET: D-33

oted from and in conformance with the
te of Colorado Department of Highways
ith Revisions by the City of Colorado
Springs Engineering Division

*Depth of to[illegible] be
increased if [illegible]d by
scour potential [illegible]ndicate
dimension on plan.

**Upstream vertical wall edge shall have
a full height 5 X 5 X 3/8" angle
attached with 6 inch nelson studs.
hot dip galvanized.

# STANDARD M-601-2

1 JANUARY, 19821

## DIMENSIONS & QUANTITIES

| HEIGHT OF FILL REQUIRED | TYPE | SPAN S | HEIGHT H | SLAB T | WELL W | BAR SIZE & SPACING V1 / V2 Sm | W1 Sw | W1 Sm | No. BARS Req'd U1 | QUANTITIES for One Linear Ft of Box CONCRETE Cu Yds | STEEL Lbs |
|---|---|---|---|---|---|---|---|---|---|---|---|
| 10' | 6-6-A | 6' | 3' | 8½" | 8" | #4 / #5 5½" | #4 | 12" | 48 | 1.000 | 112.3 |
| | | | 4' | | | | | 12" | 52 | 1.079 | 117.7 |
| | | | 5' | | | | | 12" | 56 | 1.140 | 123.1 |
| | | | 6' | | | | | 12" | 60 | 1.222 | 128.4 |
| 15' | 6-6-B | 6' | 3' | 8½" | 8" | #4 / #5 5" | #4 | 12" | 48 | 1.087 | 120.3 |
| | | | 4' | | | | | 12" | 52 | 1.161 | 125.7 |
| | | | 5' | | | | | 12" | 56 | 1.235 | 131.1 |
| | | | 6' | | | | | 12" | 60 | 1.303 | 141.4 |
| 20' | 6-6-C | 6' | 3' | 10½" | 8" | #4 / #5 4½" | #4 | 12" | 48 | 1.173 | 133.0 |
| | | | 4' | | | | | 12" | 52 | 1.247 | 139.4 |
| | | | 5' | | | | | 10" | 56 | 1.321 | 142.5 |
| | | | 6' | | | | | 7" | 60 | 1.395 | 152.4 |
| 10' | 8-8-A | 8' | 3' | 10" | 10" | #5 / #6 6" | #4 | 12" | 60 | 1.417 | 174.4 |
| | | | 4' | | | | | 12" | 64 | 1.569 | 179.8 |
| | | | 5' | | | | | 12" | 68 | 1.667 | 183.3 |
| | | | 6' | | | | | 12" | 72 | 1.753 | 190.6 |
| 15' | 8-8-B | 8' | 3' | 11" | 10" | #5 / #6 5½" | #4 | 12" | 60 | 1.597 | 186.6 |
| | | | 4' | | | | | 12" | 64 | 1.684 | 192.0 |
| | | | 5' | | | | | 12" | 68 | 1.777 | 197.4 |
| | | | 6' | | | | | 8" | 72 | 1.867 | 207.9 |
| 20' | 8-8-C | 8' | 3' | 12½" | 10" | #5 / #6 5" | #4 | 12" | 60 | 1.763 | 207.0 |
| | | | 4' | | | | | 12" | 64 | 1.856 | 207.4 |
| | | | 5' | | | | | 10" | 68 | 1.948 | 214.6 |
| | | | 6' | | | | | 7" | 72 | 2.041 | 223.3 |
| 5' | 10-10-A | 10' | 4' | 10" | 12" | #5 / #7 7" | #5 | 15" | 78 | 1.935 | 226.1 |
| | | | 6' | | | | | 15" | 86 | 2.157 | 239.8 |
| | | | 8' | | | | | 12" | 94 | 2.380 | 255.7 |
| | | | 10' | | | | | 9" | 102 | 2.607 | 273.3 |
| 10' | 10-10-B | 10' | 4' | 12" | 12" | #5 / #7 6" | #5 | 15" | 78 | 2.270 | 231.0 |
| | | | 6' | | | | | 15" | 86 | 2.442 | 247.5 |
| | | | 8' | | | | | 12" | 94 | 2.664 | 258.0 |
| | | | 10' | | | | | 8" | 102 | 2.886 | 282.6 |
| 15' | 10-10-C | 10' | 4' | 14" | 12" | #5 / #7 6" | #5 | 15" | 78 | 2.503 | 260.8 |
| | | | 6' | | | | | 12" | 86 | 2.725 | 273.6 |
| | | | 8' | | | | | 9" | 94 | 2.947 | 293.0 |
| | | | 10' | | | | | 6" | 102 | 3.170 | 323.2 |
| 5' | 12-12-A | 12' | 6' | 12" | 12" | #5 / #7 7" | #5 | 15" | 98 | 2.751 | 278.9 |
| | | | 8' | | | | | 12" | 106 | 2.973 | 294.3 |
| | | | 10' | | | | | 9" | 114 | 3.195 | 313.0 |
| 10' | 12-12-B | 12' | 6' | 14" | 12" | #5 / #7 6" | #5 | 15" | 98 | 3.083 | 313.3 |
| | | | 8' | | | | | 12" | 106 | 3.305 | 329.2 |
| | | | 10' | | | | | 8" | 114 | 3.528 | 354.1 |
| 15' | 12-12-C | 12' | 6' | 16" | 12" | #5 / #7 5" | #5 | 12" | 98 | 3.416 | 343.1 |
| | | | 8' | | | | | 9" | 106 | 3.638 | 384.7 |
| | | | 10' | | | | | 6" | 114 | 3.860 | 413.7 |
| 5' | 14-14-A | 14' | 6' | 15" | 12" | #5 / #7 6" | #5 | 15" | 110 | 3.633 | 326.2 |
| | | | 8' | | | | | 12" | 118 | 3.855 | 372.0 |
| | | | 10' | | | | | 9" | 126 | 4.077 | 392.9 |
| 10' | 14-14-B | 14' | 6' | 16" | 12" | #5 / #7 5" | #5 | 15" | 110 | 3.874 | 400.4 |
| | | | 8' | | | | | 12" | 118 | 4.046 | 425.2 |
| | | | 10' | | | | | 8" | 126 | 4.269 | 450.5 |

## BAR LIST

| MARK | SIZE | NUMBER REQ'D | TYPE | L | TOTAL LENGTH |
|---|---|---|---|---|---|
| V1 | See Table | 2n + 2 Spa + 2 | I | S+2.5W+4" | L |
| V2 | | | II | 0.785S+4" | 2L+111 |
| W1 | | | I | 11+2T-4" | L |
| W2 | #4 | 2L+2 | I | 11+2T-4" | L |
| U1 | #4 | See Table | I | L | L |

TYPE I

TYPE II

n = T-3" m = 2.41n

## I - BARS (Cont.)

| SPAN S | HEADWALL 90° to 75° | SKEW 74° to 60° | SKEW 59° to 45° |
|---|---|---|---|
| 6' | #4 | #4 | #5 |
| 8' | #4 | #5 | #6 |
| 10' | #5 | #6 | #7 |
| 12' | #6 | #7 | #8 |
| 14' | #7 | #8 | #9 |

Note: I-bars required for each headwall.

## HEADWALL & TOEWALL QUANTITIES

| I-BAR SIZE | APPROX. QUANTITIES FOR ONE Headwall & Toewall* | |
|---|---|---|
| # | 10% Dif. | Lin. Ft. |
| 4 | 13 | |
| 5 | 17 | |
| 6 | 21 | |
| 7 | 26 | |
| 8 | 31 | |
| 9 | 38 | |

Concrete = 0.085 cu yd/ft

* Includes all Headwall and Toewall reinforcing.

Δ Deduct 0.049 cu yd Concrete and 3.4 lb. Reinforcing Steel from these quantities when Concrete Apron is specified.

## SECTION A-A

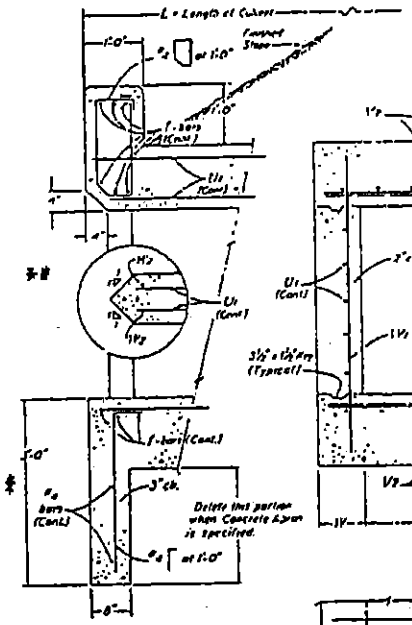


## SECTION B - B

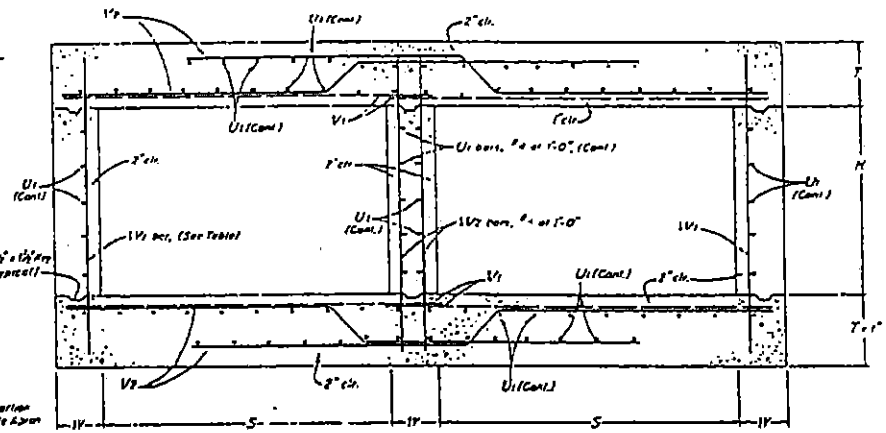


## PLAN

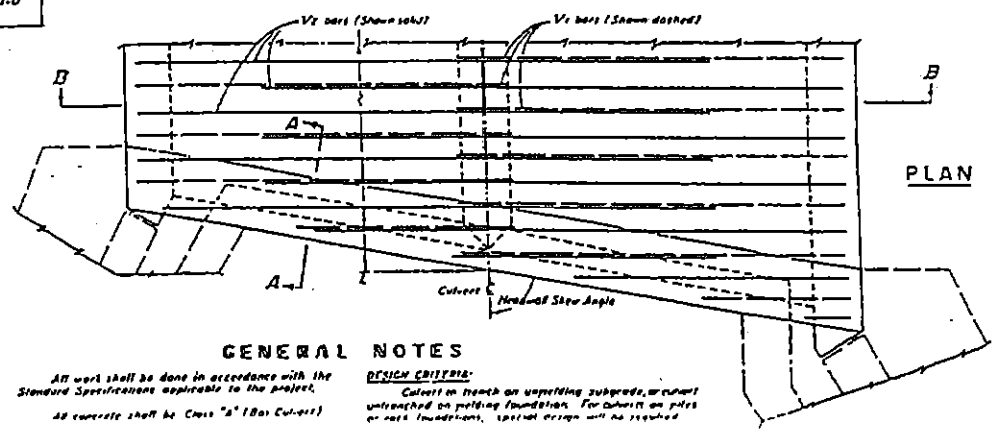


## GENERAL NOTES

All work shall be done in accordance with the Standard Specifications applicable to the project.

All concrete shall be Class "A" (Bar Culvert)

All construction joints shall be thoroughly cleaned before fresh concrete is poured.

Construction joints shall be spaced at 33 foot max. centers and shall extend through the entire cross section of the Box Culvert.

Splice quantities for longitudinal bars are not included.

DESIGN DATA: AASHTO, 1973.
Unit Stresses: $f_s$ = 20,000 psi
$f_c$ = 1,200 psi
n = 10

DESIGN CRITERIA:
Culvert in trench on unyielding subgrade, or culvert unbracket on yielding foundation. For culverts on piles or rock foundations, special design will be required.

LOADING DATA:
Live Load = AASHTO, HS 20-44
Dead Load = Earth Load = [illegible] Per Ft.
Equiv. Fluid Pressure = 30 lbs. Per Ft.

The minimum splice length for common bar sizes shall be:

| BAR SIZE | #4 | #5 | #6 | #7 | #8 | #9 |
|---|---|---|---|---|---|---|
| SPLICE LENGTH | 1'-0" | 1'-6" | 1'-8" | 2'-3" | 3'-0" | 3'-10" |

All exposed corners on concrete shall be chamfered ¾".

| REVISIONS | | | |
|---|---|---|---|
| | | | |

CITY OF COLORADO SPRINGS
DOUBLE CONCRETE BOX CULVERT
APPROVED BY [illegible] CITY ENGINEER

| SCALE: NO SCALE | DATE: JAN. 80 | DRAWN: ZLB | SHEET: D-34 |
|---|---|---|---|

Adopted from and in conformance with the State of Colorado Department of Highways with Revisions by the City of Colorado Springs Engineering Division

*Depth of toes wall to be increased if required by scour potential. Indicate dimension on plan.

**Upstream vertical wall edge shall have a full height 5 X 5 X 3/8" angle attached with 6 inch nelson studs, hot dip galvanized.

# STANDARD M-601-3

(JANUARY, 1982)

## DIMENSIONS & QUANTITIES

| HEIGHT OF FILL ALLOWED | TYPE | CLEAR SPAN S1 | CLEAR SPAN S2 | HEIGHT H | SLAB T | SIZE OF BARS V1 & V2 | SPACING OF BARS V | W1 | L1 | NO BARS PER FT | QUANTITIES for One Lin. Foot Concrete Cu. yds. | Steel Lbs. |
|---|---|---|---|---|---|---|---|---|---|---|---|---|
| 5' | 9-12-A | 9' | 12' | 6' | 10" | #7 | 7½" | 15" | 136 | | 2.946 | 403.9 |
| | | | | 8' | | | | 15" | 148 | | 3.207 | 423.6 |
| | | | | 10' | | | | 12" | 160 | | 3.467 | 449.1 |
| 10' | 9-12-B | 9' | 12' | 6' | 11" | #4 | 7" | 15" | 134 | | 3.304 | 344.4 |
| | | | | 8' | | | | 12" | 146 | | 3.613 | 369.0 |
| | | | | 10' | | | | 6" | 160 | | 3.937 | 398.6 |
| 15' | 9-12-C | 9' | 12' | 6' | 12" | #4 | 5½" | 15" | 136 | | 3.343 | 412.5 |
| | | | | 8' | | | | 9" | 148 | | 3.632 | 439.9 |
| | | | | 10' | | | | 6" | 160 | | 3.891 | 473.1 |
| 5' | 11-14-A | 11' | 14' | 6' | 11" | #6 | 6" | 15" | 156 | | 3.581 | 513.9 |
| | | | | 8' | | | | 15" | 168 | | 3.841 | 530.6 |
| | | | | 10' | | | | 12" | 180 | | 4.100 | 554.3 |
| 10' | 11-14-B | 11' | 14' | 6' | 12½" | #4 | 5½" | 15" | 156 | | 3.948 | 477.1 |
| | | | | 8' | | | | 12" | 168 | | 4.207 | 497.8 |
| | | | | 10' | | | | 6" | 180 | | 4.467 | 527.6 |
| 15' | 11-14-C | 11' | 14' | 6' | 14" | #4 | 5" | 15" | 156 | | 4.313 | 512.4 |
| | | | | 8' | | | | 9" | 168 | | 4.574 | 543.3 |
| | | | | 10' | | | | 6" | 180 | | 4.833 | 579.1 |
| 5' | 13-16-A | 13' | 16' | 6' | 12½" | #6 | 5½" | 15" | 176 | | 4.430 | 626.6 |
| | | | | 8' | | | | 15" | 188 | | 4.649 | 643.3 |
| | | | | 10' | | | | 10" | 200 | | 4.949 | 669.8 |
| 10' | 13-16-B | 13' | 16' | 6' | 14" | #4 | 5" | 15" | 176 | | 4.832 | 583.9 |
| | | | | 8' | | | | 12" | 188 | | 5.111 | 604.8 |
| | | | | 10' | | | | 8" | 200 | | 5.370 | 634.7 |
| 15' | 13-16-C | 13' | 16' | 6' | 15½" | #4 | 4" | 15" | 176 | | 5.270 | 697.3 |
| | | | | 8' | | | | 9" | 188 | | 5.530 | 723.0 |
| | | | | 10' | | | | 6" | 200 | | 5.789 | 761.3 |

## BAR LIST

| MARK | SIZE | NUMBER REQUIRED | TYPE | L | TOTAL LENGTH |
|---|---|---|---|---|---|
| V1 | See Table | 12L/Spa. + 4 | I | S1 + 1'-9" | L |
| V2 | #7 | 12L/Spa. + 4 | II | 0.61 S2 | 2L + m |
| V3 | See Table | 12L/Spa. + 2 | I | S2 + 1'-10" | L |
| V4 | #7 | 12L/Spa. + 2 | III | 0.776 S1 | 3L + 2m |
| W1 | #5 | 12L/Spa. + 2 | I | H + 2T - 4" | L |
| W2 | #4 | 4L + 4 | I | H + 2T - 4" | L |
| U1 | #4 | See Table | I | L | L |

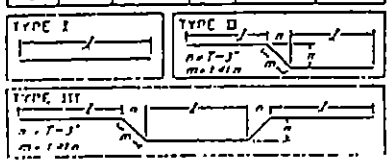


## HEADWALL & TOEWALL QUANTITIES

| I-BAR SIZE | APPROX. QUANTY. FOR ONE HEADWALL (TOEWALL) |
|---|---|
| V | LBS. PER LIN. FT. |
| 5 | 17 |
| 6 | 21 |
| 7 | 26 |
| 8 | 31 |
| 9 | 38 |
| Concrete = .0083 cu.yds./lin.ft. | |

* Includes all Headwall and Toewall reinforcing.

* Deduct 0.019 cu.yd. of Concrete and 3 lb. of Steel from these quantities when Concrete Apron is specified.

## I - BARS (Continuous)

| SPAN S2 | HEADWALL SKEW ANGLE 90° to 75° | 74° to 60° | 59° to 45° |
|---|---|---|---|
| 12" | #5 | #6 | #7 |
| 14" | #6 | #7 | #8 |
| 16" | #7 | #8 | #9 |

Have I - bars required for each headwall

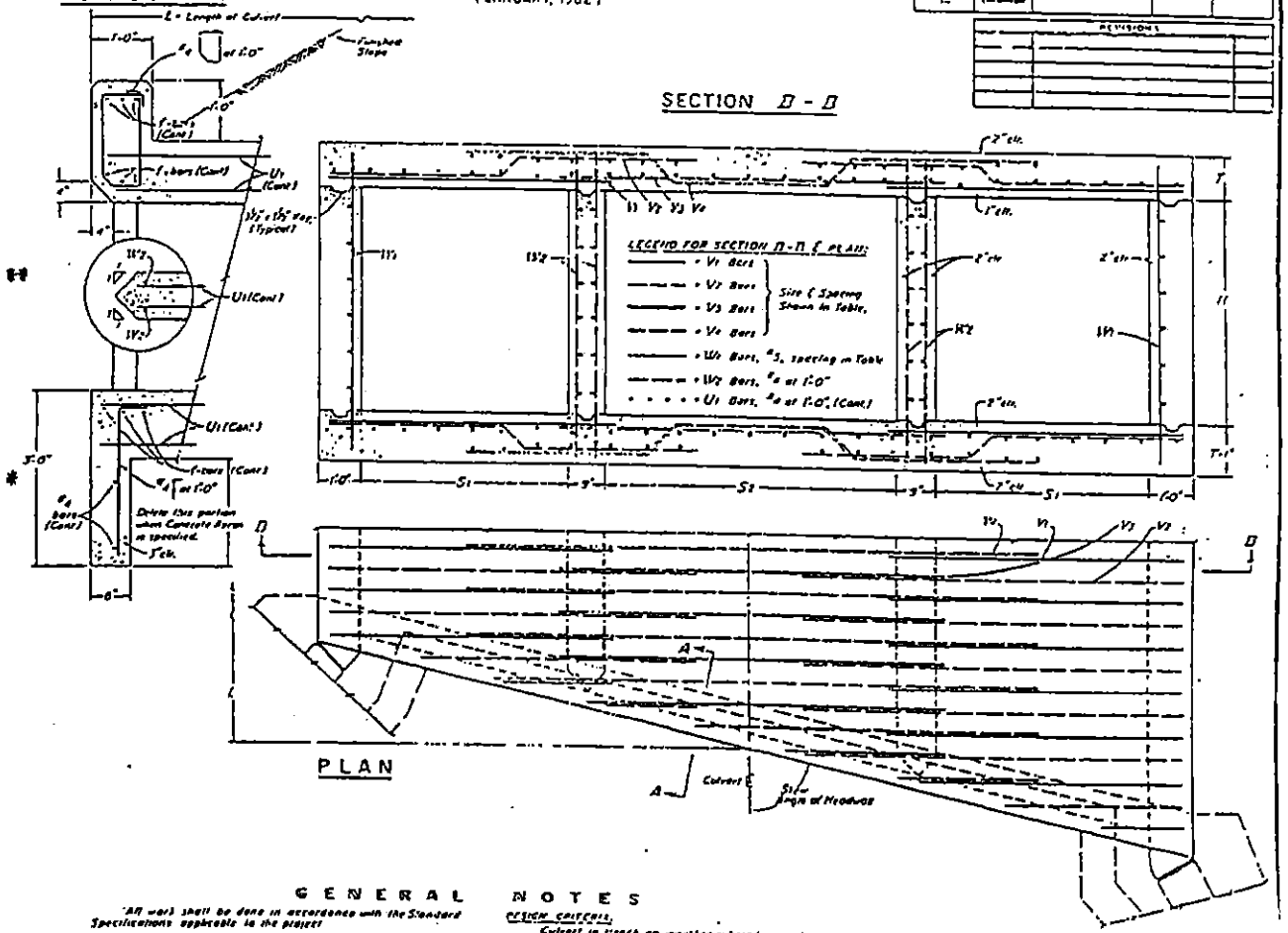


## GENERAL NOTES

All work shall be done in accordance with the Standard Specifications applicable to the project.

All concrete shall be Class "A" (Box Culvert).

All construction joints shall be thoroughly cleaned before fresh concrete is poured.

Construction joints shall be spaced at 33 feet max. centers and shall extend through the entire cross sectional the Box Culvert.

Screw quantities for longitudinal bars are not included.

DESIGN DATA: AASHTO, 1973.

Unit Stresses: $f_s$ = 20,000 psi
$f_c$ = 1,200 psi
$n$ = 10

## NOTES

DESIGN CRITERIA:

Culvert in trench on unyielding subgrade, or culvert constructed on yielding foundation. For culverts on piles or pier foundations, special design will be required.

LOADING DATA:

Live Load = AASHTO, HS 20-44

Dead Load = (Span Load) = 40 lbs/sq ft
(Earth Fluid Pressure = 30 lbs/sq ft)

The minimum splice length for common bar sizes shall be

| BAR SIZE | #4 | #5 | #6 | #7 | #8 | #9 |
|---|---|---|---|---|---|---|
| SPLICE LENGTH | 1'-0" | 1'-2" | 1'-8" | 2'-3" | 3'-0" | 3'-10" |

All exposed corners on concrete shall be chamfered 3/4".

| | |
|---|---|
| CITY OF COLORADO SPRINGS | |
| TRIPLE CONCRETE BOX CULVERT | |
| APPROVED BY _____ ENGINEER | |
| SCALE: NO SCALE | DRAWN: PL.B. / SHEET: D-35 |

Adopted from and in conformance with the State of Colorado Department of Highways with Revisions by the City of Colorado Springs Engineering Division

*Depth of toe wall to be increased if required by scour potential. Indicate dimension on plan.

# STANDARD M-601-20

(JANUARY, 1982)

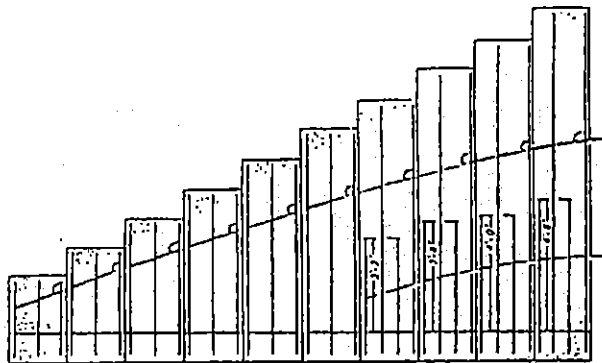


| | | | | | | | | | | |
|---|---|---|---|---|---|---|---|---|---|---|
| e = | 1'-6" | 1'-6" | 1'-6" | 1'-6" | 1'-0" | 0'-8½" | 1'-0" | 0'-9½" | 0'-7" | 0'-5½" clr. |
| h = | 3' | 3' | 4' | 5' | 6' | 7' | 8' | 9' | 10' | 11' |
| a = | 1'-0" | 1'-2" | 1'-4" | 1'-6" | 1'-8" | 1'-10" | 2'-0" | 2'-2" | 2'-4" | 2'-6" |
| b = | 1'-6" | 2'-0" | 2'-4" | 2'-8" | 3'-0" | 3'-4" | 3'-8" | 4'-0" | 4'-4" | 4'-8" |
| w = | 3'-6" | 3'-2" | 3'-8" | 4'-2" | 4'-8" | 5'-2" | 5'-8" | 6'-2" | 6'-8" | 7'-2" |
| C (d bars) | #4 at 1'-6" | #4 at 1'-6" | #4 at 1'-6" | #4 at 1'-0" | #4 at 8½" | #6 at 1'-0" | #6 at 9½" | #6 at 7" | #6 at 5½" | clr. |
| *Conc. C.Y./ft | 0.161 | 0.210 | 0.259 | 0.308 | 0.358 | 0.407 | 0.457 | 0.506 | 0.556 | 0.604 |
| *Reinf. lb/ft | 8.0 | 9.3 | 10.7 | 12.1 | 16.2 | 21.7 | 29.0 | 37.0 | 51.0 | 67.3 |

* Does not include Toe Wall quantities.

## DESIGN TABLE

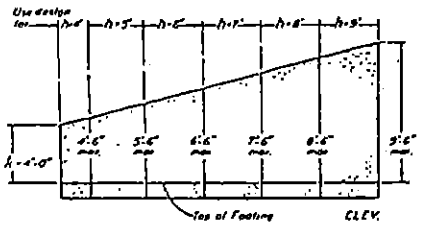


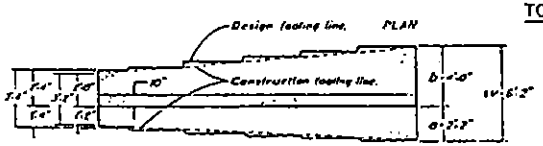


## DESIGN EXAMPLE

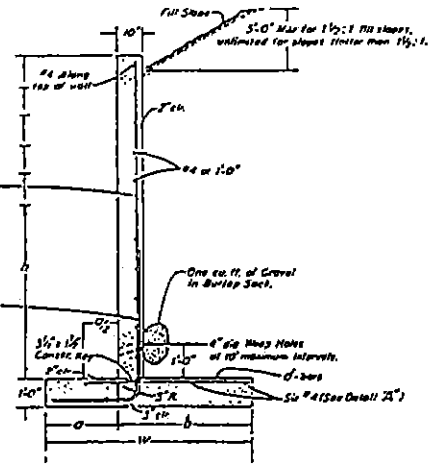


## TYPICAL SECTION

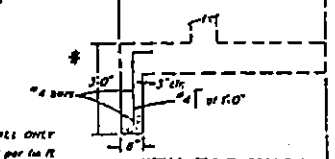


## WITH TOE WALL

QUANTITIES FOR TOE WALL ONLY

Concrete 0.049 cu yd per lin ft
Reinforcement 3.4 lb per lin ft

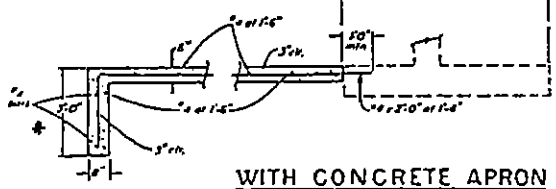


## WITH CONCRETE APRON

Re-bar: .809/sq ft.

## APRON TOE WALL

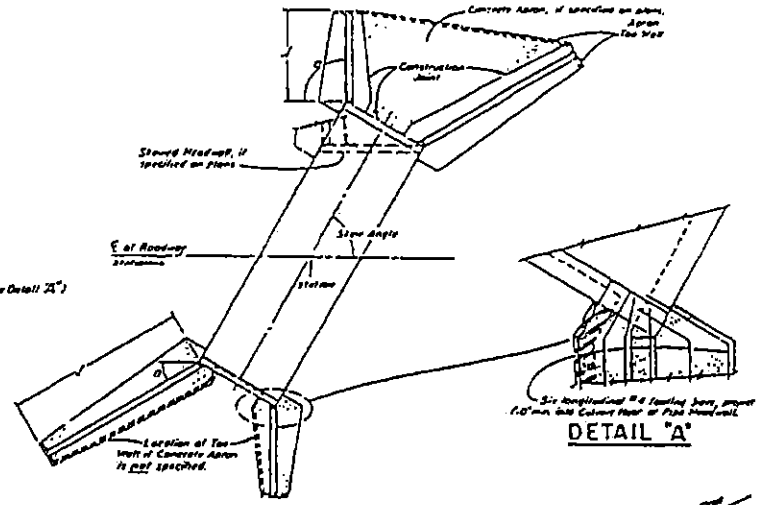


## DETAIL "A"

## TYPICAL CULVERT LAYOUT

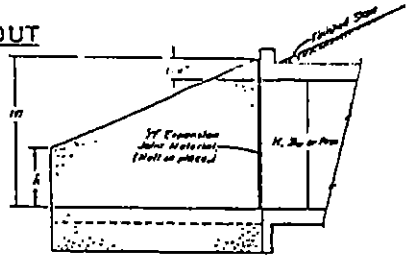


## WING ELEVATION

m = H, Do or Rise + (1'-6") unless otherwise shown on Plans.

## GENERAL NOTES

All work shall be done in accordance with the Standard Specifications applicable to the project.+

All exposed corners on concrete shall be chamfered ¾".

Wingwall footings and floor of Box Culvert shall be placed monolithically.

Expansion Joint Material shall conform to AASHTO M-213 and payment therefor shall be included in the price for Concrete, (Box Culvert) or (Wall).

Dimensions "H", "Do", "Rise", "h", "f", "m" and angles for wingwalls shall be as shown on the plans.

The minimum splice length for common bar sizes shall be:

| BAR SIZE | #6 | #4 |
|---|---|---|
| SPLICE LENGTH | 1'-0" | 1'-8" |

DESIGN DATA:

Unit Stresses: $f_s$ = 20,000 psi
$f_c$ = 1,200 psi
n = 10

Equivalent Fluid Pressure = 30 lbs/cu ft.
Maximum Toe Pressure = 1 Ton/sq ft.

All construction joints shall be thoroughly cleaned before fresh concrete is poured.

Wingwall Concrete shall be:
Concrete, Class A (Box Culvert) for CBC's
Concrete, Class A, B or B (Wall) for Pipes

+As required by the District Engineer

| CITY OF COLORADO SPRINGS | | | |
|---|---|---|---|
| WINGWALLS FOR PIPE OR BOX CULVERT | | | |
| APPROVED BY [signature] CITY ENGINEER | | | |
| SCALE: NO SCALE | DATE: JAN. 90 | DRAWN: P.L.B. | SHEET D-36 |

# TRIVIEW METROPOLITAN DISTRICT
# STORM SEWER OUTFALL BASIN

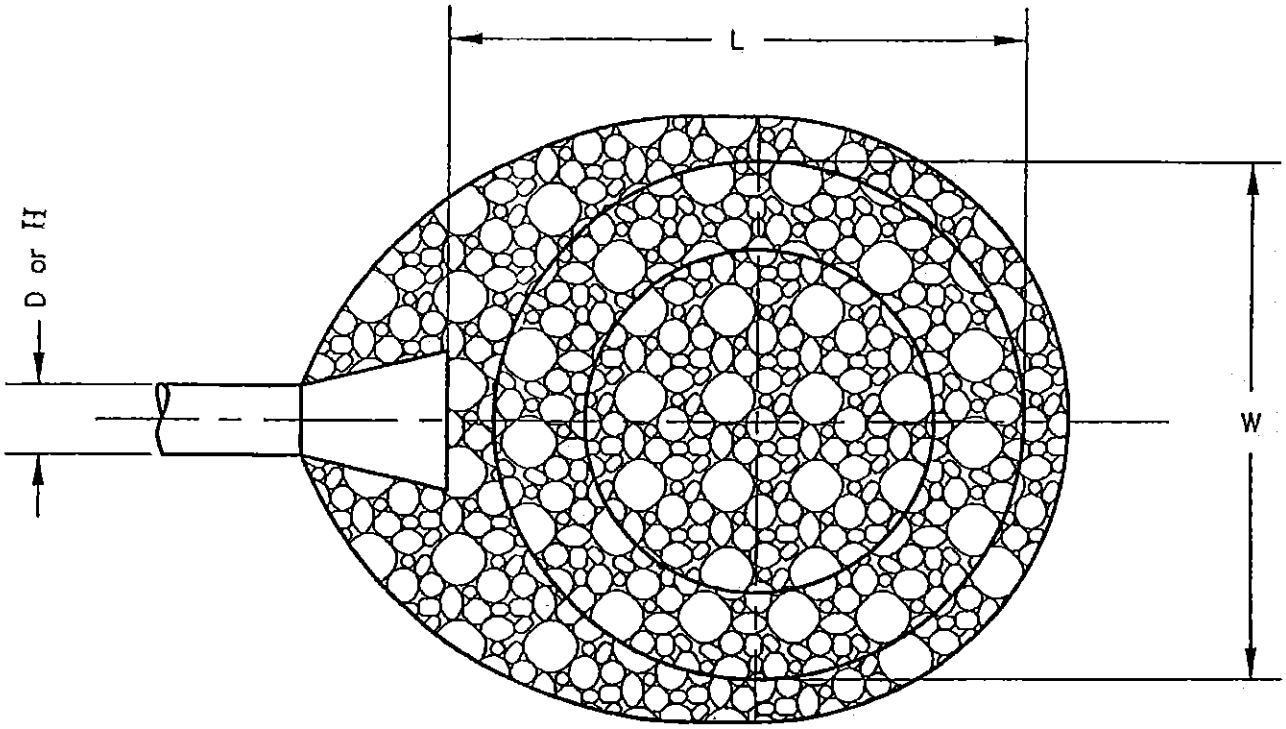


## SIDE CROSS SECTION

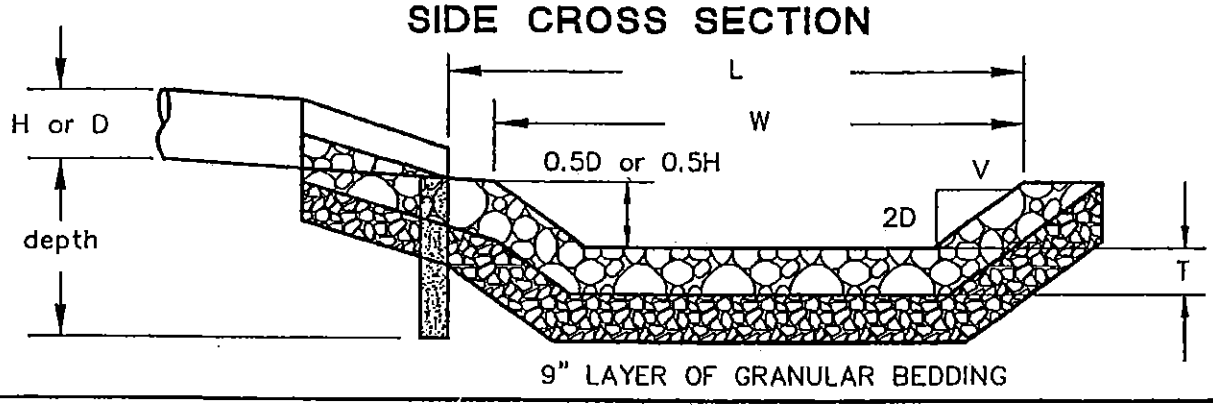


## FRONT CROSS SECTION

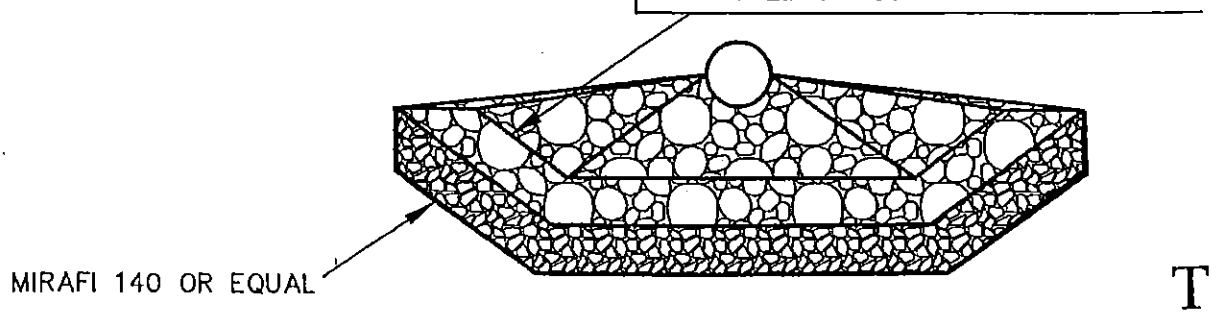


T-1

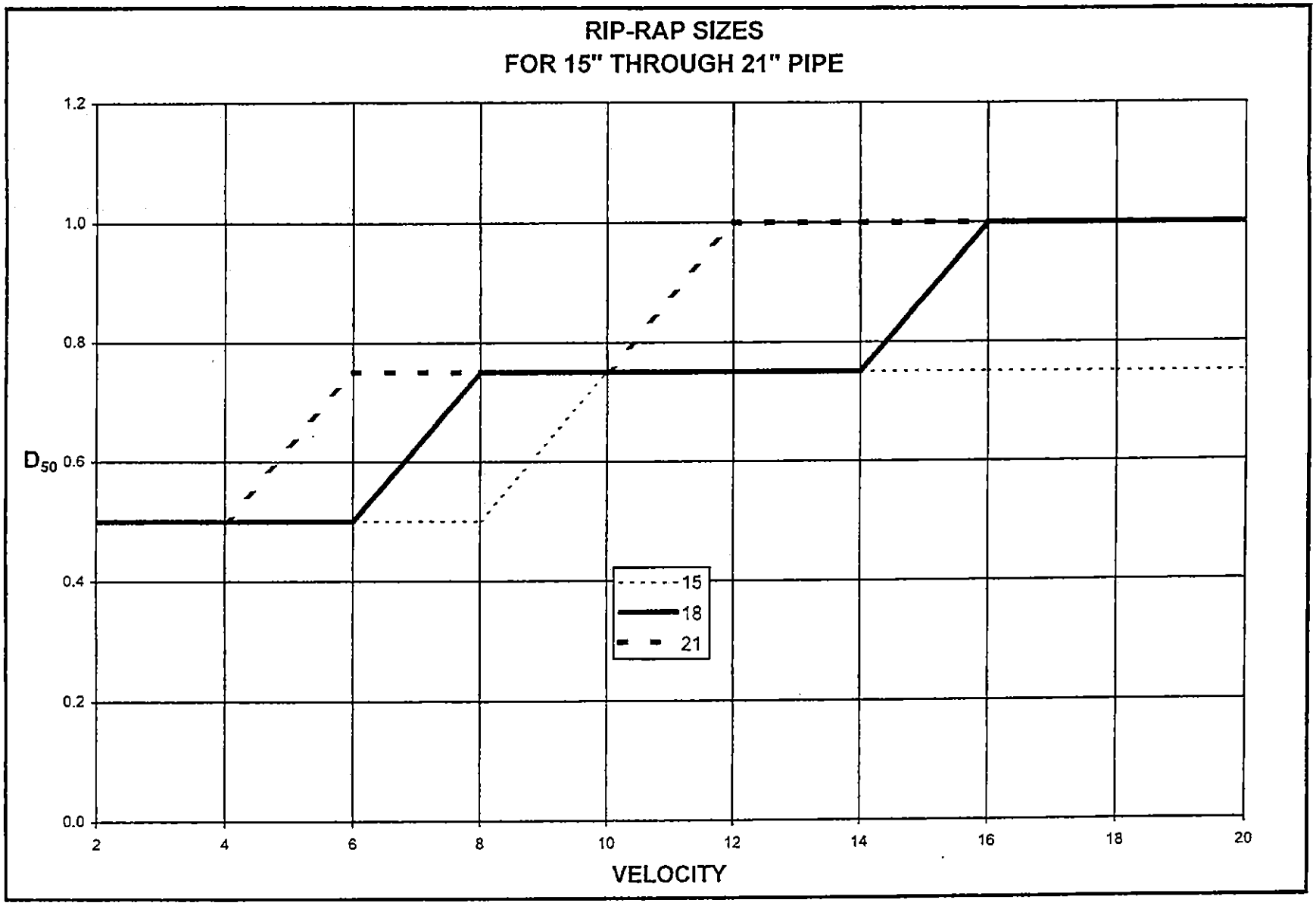
RIP-RAP SIZES
FOR 15" THROUGH 21" PIPE
1.2
1.0
0.8
0.6
0.4
0.2
0.0
D50
2
4
6
8
10
12
14
16
18
20
VELOCITY
15
18
21

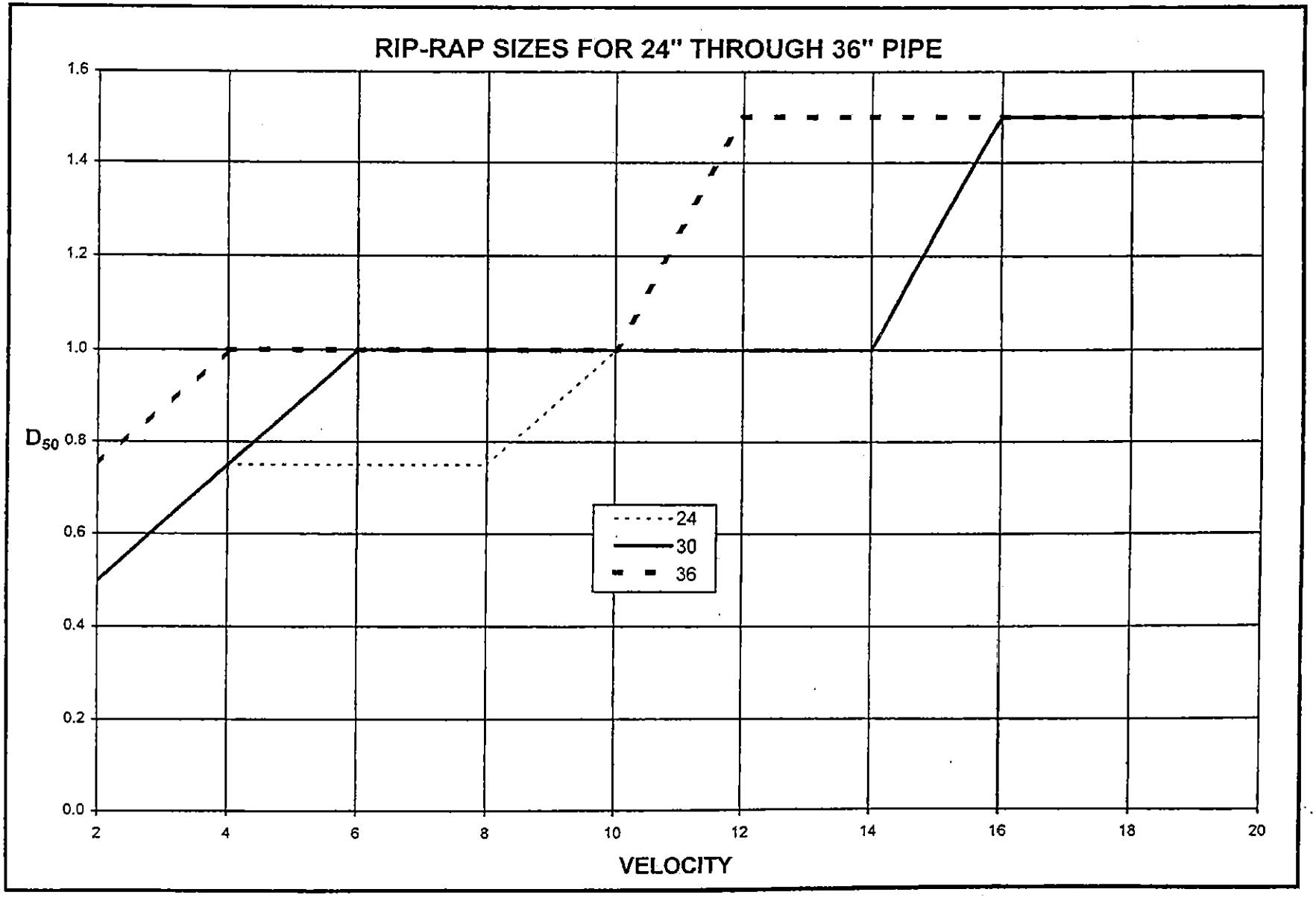
RIP-RAP SIZES FOR 24" THROUGH 36" PIPE
1.6
1.4
1.2
1.0
D50 0.8
0.6
0.4
0.2
0.0
2
4
6
8
10
12
14
16
18
20
VELOCITY
24
30
36

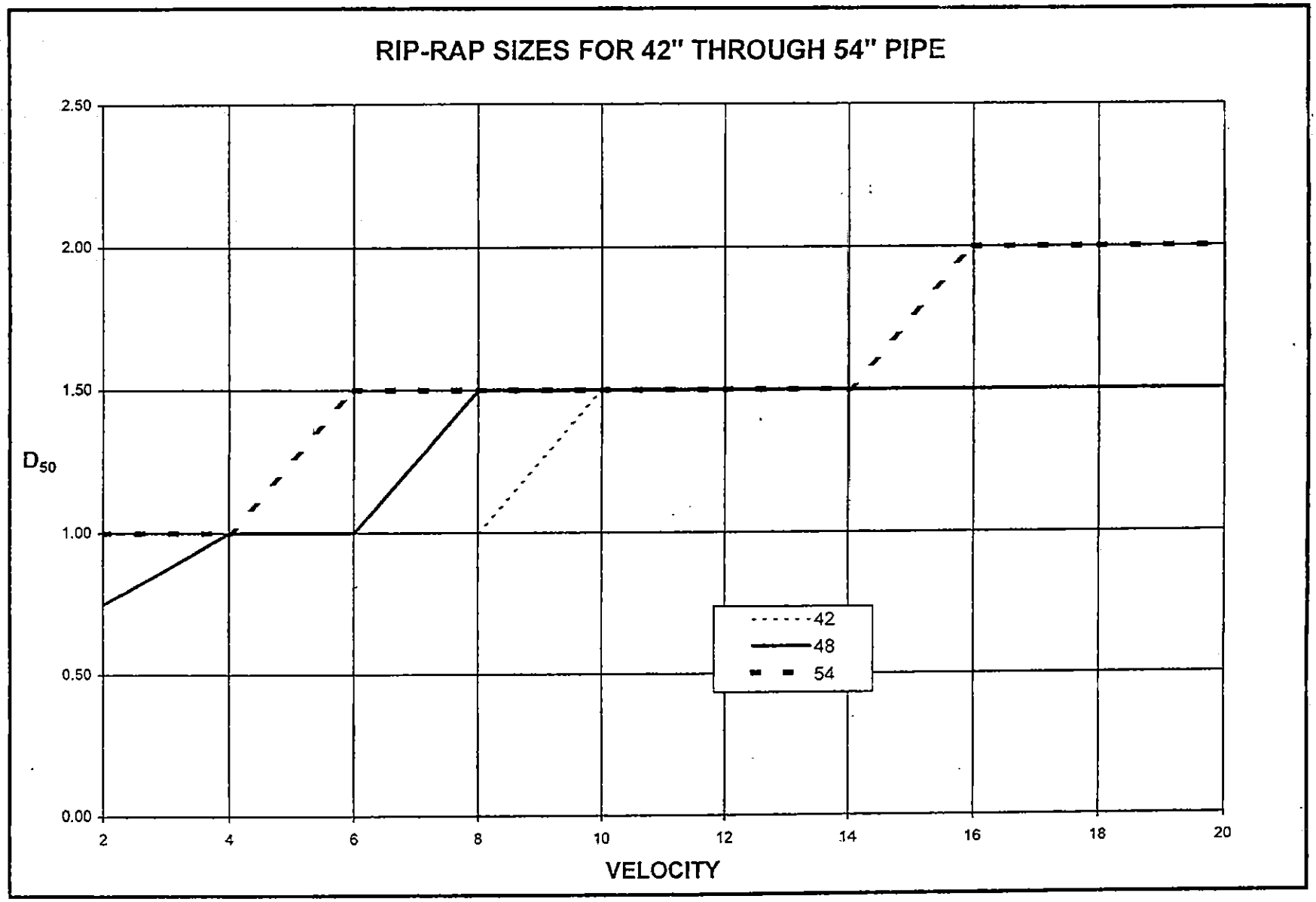
RIP-RAP SIZES FOR 42" THROUGH 54" PIPE
2.50
2.00
1.50
1.00
0.50
0.00
D50
2
4
6
8
10
12
14
16
18
20
VELOCITY
42
48
54

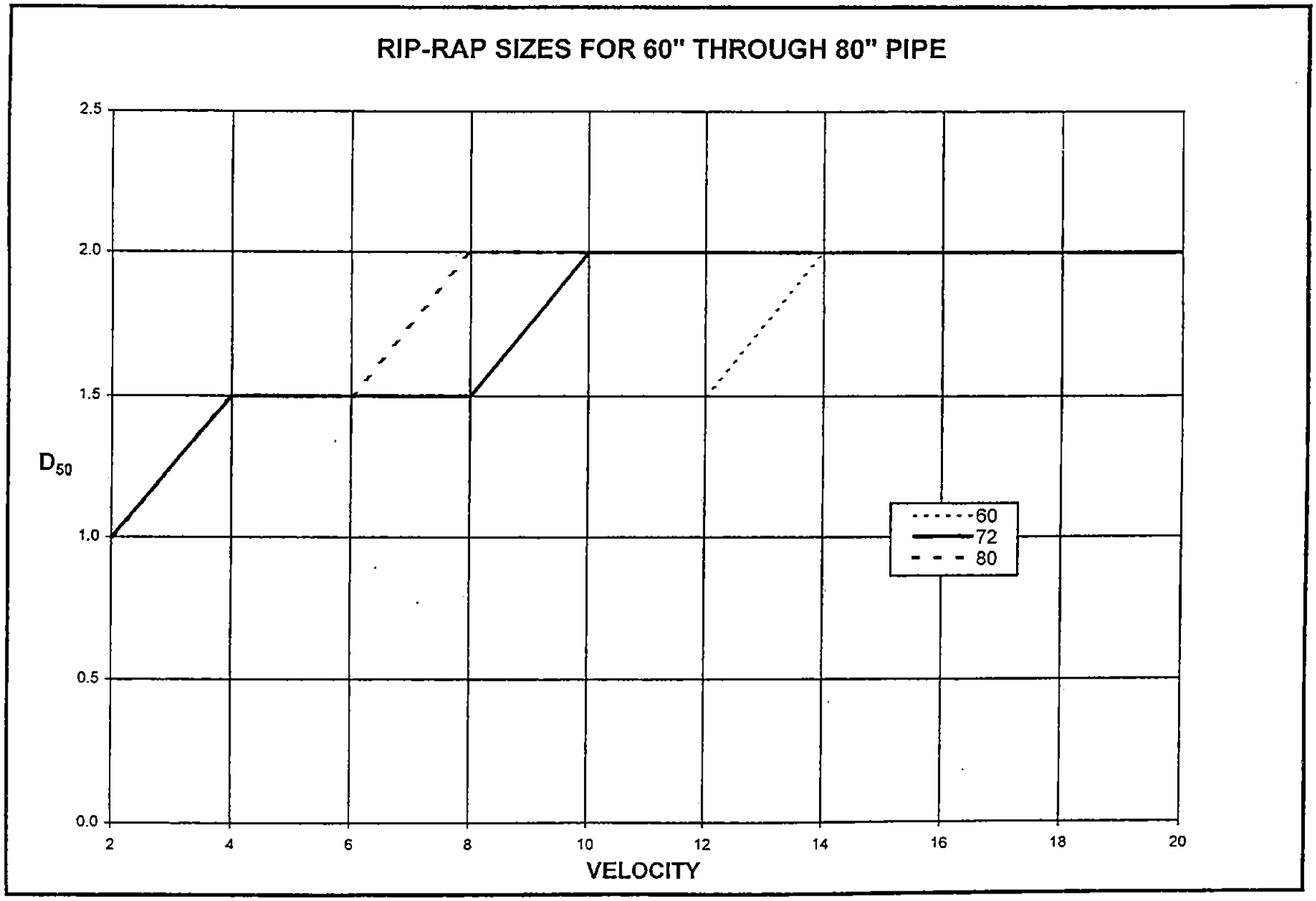
RIP-RAP SIZES FOR 60" THROUGH 80" PIPE
2.5
2.0
1.5
1.0
0.5
0.0
D50
2
4
6
8
10
12
14
16
18
20
VELOCITY
60
72
80

# 5. RIPRAP

Riprap has proven to be an effective means to deter erosion along channel banks, in channel beds, upstream and downstream from hydraulic structures, at bends, at bridges, and in other areas where erosive tendencies exist. Riprap is a popular choice for erosion protection because the initial installation costs are often less than alternative methods for preventing erosion. However, the designer needs to bear in mind that there are additional costs associated with riprap erosion protection since riprap installations require frequent inspection and maintenance. Wire enclosed riprap (gabion) in most cases requires complete renovation every 10 to 15 years.

One problem which the designer often neglects is the "erosive" effect of neighborhood children in urban areas on the riprap itself. It has been found by many engineers and public works officials that sometimes the riprap is almost completely lost within the first month or two after project completion. It is usually thrown into the water by the children purely for the sake of causing splashes. Increased police observance and meetings with neighborhood leaders have little effect. This non-hydraulic problem often makes the use of light or very light riprap impractical in urban areas.

In 1980 the Urban Drainage and Flood Control District staff began investigating riprap design and installation practices. Clear and concise procedures for design and installation were found to be lacking, and it was decided to develop a set of riprap design and installation guidelines for the District. Dr. William Hughes of the University of Colorado at Denver was retained by the District in 1981 to research the topic and to develop draft riprap criteria. The draft criteria was then distributed, on a trial basis, to engineering professionals in the Denver metropolitan area. This permitted the District staff to gain experience for approximately nine months with the draft documents.

The Type I and Type II bedding specifications shown in Table 5-3 were developed using the T-V filter criteria and the fact that bedding which will protect an underlying noncohesive soil with a mean grain size of 0.045 mm will protect anything finer. Since the T-V filter criterion provides some latitude in establishing bedding gradations, it was possible to make the Type I and Type II bedding specifications conform with Colorado Division of Highways aggregate specifications. The Type I bedding in Table 5-3 is designed to be the lower layer in a two layer filter for protecting fine grained soils and has a gradation identical to Colorado Division of Highways concrete sand specification AASHTO M-6 (Section 703.01). Type II bedding, the upper layer in a two layer filter, is equivalent to Colorado Division of Highways Class A filter material (Section 703.09) except that it permits a slightly larger maximum rock fraction. When the channel is excavated in course sand and gravel (50 percent or more by weight retained on the #40 sieve), only the Type II filter is required. Otherwise, a two layer bedding (Type I topped by Type II) is required. Alternatively, a single 12 inch layer of Type II bedding can be used except at drop structures. For required bedding thickness see Table 5-4. At drop structures a combination of filter fabric and Type II bedding is acceptable as an alternative to a two layer filter. The specifications for the T-V reverse filter relate the gradation of the protective layer (filter) to that of the bed material (base) by the following inequalities:

$$D_{15(filter)} \leq 5\ d_{85(base)} \qquad \text{(Equation 5-1)}$$

$$4\ d_{15(base)} \leq D_{15(filter)} \leq 20\ d_{15(base)} \qquad \text{(Equation 5-2)}$$

$$D_{50(filter)} \leq 25\ d_{50(base)} \qquad \text{(Equation 5-3)}$$

where the capital "D" refers to the filter grain size and the lower case "d" to the base grain size. The subscripts refer to the percent by weight which is finer than the grain size denoted by either "D" or "d". For example, 15 percent of the filter material is finer than $D_{15(filter)}$ and 85 percent of the base material is finer than $d_{85(base)}$. Application of the T-V filter criteria is best described using an example (see Paragraph 5.7.1).

Before printing the final version of the criteria, the District retained Dr. Michael A. Stevens to provide an independent technical review. Dr. Stevens concluded that the basic document was technically sound and also offered suggestions to clarify the document and to make the text more consistent with commonly used terminology. The final version of this section is considered to be state-of-the-art as it is known today. Never-the-less changes are expected in the future as the technology continues to evolve.

## 5.1 Ordinary Riprap

Ordinary riprap, or simply riprap, refers to a protective blanket of large loose stones, which are usually placed by machine to achieve a desired configuration. The term ordinary riprap has been introduced to differentiate loose stones from grouted riprap and wire enclosed rock, which are discussed later.

Many factors govern the size of the rock necessary to resist the forces tending to move the riprap. For the riprap itself, this includes the size and weight of the individual rocks, the shape of the stones, the gradation of the particles, the blanket thickness, the type of bedding under the riprap, and the slope of the riprap layer. Hydraulic factors affecting riprap include the velocity, current direction, eddy action and waves.

Experience has shown that riprap failures result from undersized individual rocks in the maximum size range, improper gradation of the rock which reduces the interlocking of individual particles and improper bedding for the riprap which allows leaching of channel particles through the riprap blanket.

### 5.1.1 Rock Properties

Rock used for riprap or wire enclosed riprap should be hard, durable, angular in shape, and free from cracks, overburden, shale and organic matter. Neither breadth nor thickness of a single stone should be less than 1/3 its length and rounded stone should be avoided. The rock should sustain a loss of not more than 40 percent after 500 revolutions in an abrasion test (Los Angeles machine - ASTM C-535-69) and should sustain a loss of not more than 10 percent after

12 cycles of freezing and thawing (AASHTO test 103 for ledge rock procedure A). Rock having a minimum specific gravity of 2.65 is preferred; however, in no case should rock have a specific gravity less than 2.50. Classification and gradation for riprap are shown in Table 5-1 and Figure 5-1 and are based on minimum specific gravity of 2.50 for the rock. Because of its relatively small size and weight, riprap types VL and L must be buried with native top soil and revegetated to protect the rock from vandalism.

### 5.1.2 Grouted Riprap

Grouted riprap provides a relatively impervious channel lining which is less subject to vandalism than dumped riprap. Grouted riprap requires less routine maintenance by reducing silt and trash accumulation and is particularly useful for lining low flow channels and steep banks. The appearance of grouted riprap is enhanced by exposing the tops of individual stones and by cleaning the projecting rocks with a wet broom. Grouted riprap should meet all the requirements for ordinary riprap except that the smallest rock fraction (smaller than the 10 percent size) should be eliminated from the gradation. A reduction of riprap size by one size designation is permitted for grouted rock.

As with ordinary riprap, grouted riprap should be placed on an adequate bedding. The grout should contain air entrainment, have a 28-day strength of at least 2400 pounds per square inch and should have a high slump (5 to 7 inches) in order to penetrate either the full depth of the riprap layer or at least 2 feet where the riprap layer is thicker than 2 feet. Grout penetration may be accomplished by rodding, vibrating, or pumping of the grout into the riprap voids. Concrete having maximum aggregate size of 3/4-inches may be substituted for grout when using Type M riprap or larger riprap. Weep holes should be provided at least every 4 to 6 feet at the toe of channel slopes and channel drops to reduce uplift forces on the grouted channel lining.

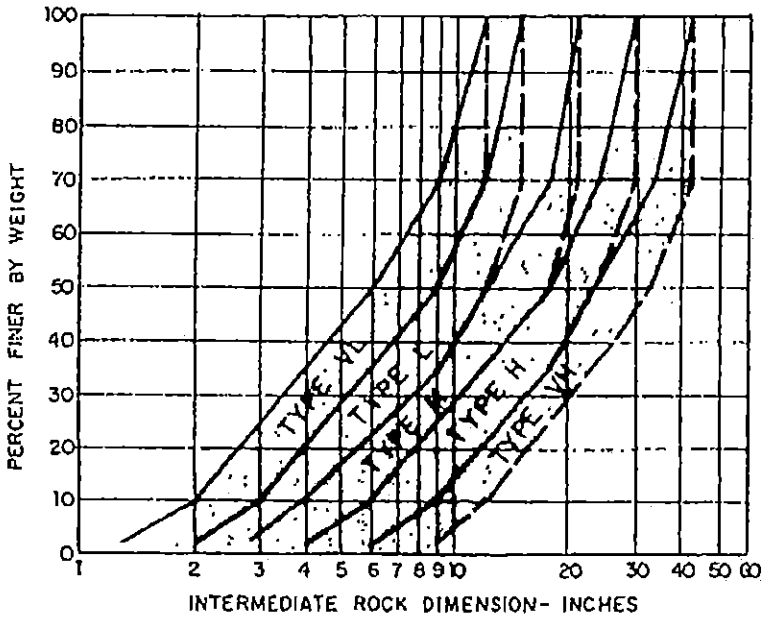


FIGURE 5-1. GRADATION OF ORDINARY RIPRAP

Table 5-1

CLASSIFICATION AND GRADATION OF ORDINARY RIPRAP

| Riprap Designation | % Smaller Than Given Size By Weight | Intermediate Rock Dimension (Inches) | $d_{50}$* (Inches) |
|---|---|---|---|
| Type VL | 70-100 | 12 | |
| | 50-70 | 9 | |
| | 35-50 | 6 | 6** |
| | 2-10 | 2 | |
| Type L | 70-100 | 15 | |
| | 50-70 | 12 | |
| | 35-50 | 9 | 9** |
| | 2-10 | 3 | |
| Type M | 70-100 | 21 | |
| | 50-70 | 18 | |
| | 35-50 | 12 | 12 |
| | 2-10 | 4 | |
| Type H | 100 | 30 | |
| | 50-70 | 24 | |
| | 35-50 | 18 | 18 |
| | 2-10 | 6 | |
| Type VH | 100 | 42 | |
| | 50-70 | 33 | |
| | 35-50 | 24 | 24 |
| | 2-10 | 9 | |

*$d_{50}$ = Mean particle size

** Bury types VL and L with native top soil and revegetate to protect from vandalism.

## 5.2 Wire Enclosed Rock

Wire enclosed rock refers to rocks that are bound together in a wire basket so that they act as a single unit. One of the major advantages of wire enclosed rock is that it provides an alternative in situations where available rock sizes are too small for ordinary riprap. Another advantage is the versatility that results from the regular geometric shapes of wire enclosed rock. The rectangular blocks and mats can be fashioned into almost any shape that can be

formed with concrete. The durability of wire enclosed rock is generally limited by the service life of the galvanized binding wire which, under normal conditions, is considered to be about 15 years. Water carrying silt, sand or gravel can reduce the service life of the wire; also water which rolls or otherwise moves cobbles and large stones breaks the wire with a hammer and anvil action and considerably shortens the life of the wire. The wire has been found to be susceptible to corrosion by various chemical agents and is particularly affected by high sulfate soils. If corrosive agents are known to be in the water or soil, a plastic coated wire should be specified.

Wire enclosed rock is not maintenance free and must be periodically inspected to determine whether the wire is sound. If breaks are found while they are still relatively small, they may be patched by weaving new strands of wire into the wire cage. Wire enclosed rock installations have been found to attract vandalism. Flat mattress surfaces seem to be particularly susceptible to having wires cut and stones removed. It is recommended that, where possible, mattress surfaces be buried, as it has been found that wire enclosed rock buried under a few inches of soil is less prone to vandalism. Wire enclosed rock installations need to be inspected at least once a year under the best circumstances and may require inspection every three months in vandalism prone areas in conjunction with a regular maintenance program. Mattresses on sloping surfaces must be securely anchored to the surface of the soil as discussed in Section 5.5.3.

Rock filler for the wire baskets should meet the rock property requirements for ordinary riprap. Minimum rock sizes and basket characteristics are shown in Table 5-2. The maximum stone size should not exceed 2/3 the basket depth or 12 inches, whichever is smaller.

Table 5-2

GABION BASKETS
(Standard U.S.A. Sizes)

| Drainage manual designation | Letter code of size | length | width | depth | Number of diaphragms | Capacity cubic yards | Minimu: rock dimensi |
|---|---|---|---|---|---|---|---|
| G36 | A | 6' | x 3' | x 3' | 1 | 2 | 4" |
| | B | 9' | x 3' | x 3' | 2 | 3 | 4" |
| | C | 13' | x 3' | x 3' | 3 | 4 | 4" |
| G18 | D | 6' | x 3' | x 1' | 1 | 1 | 4" |
| | E | 9' | x 3' | x 1' | 2 | 1.5 | 4" |
| | F | 13' | x 3' | x 1' | 3 | 2 | 4" |
| G12 | G | 6' | x 3' | x 1' | 1 | 0.66 | 4" |
| | H | 9' | x 3' | x 1' | 2 | 1 | 4" |
| | I | 13' | x 3' | x 1' | 3 | 1.33 | 4" |
| | | | SLOPE MATTRESS | | | | |
| SM9 | T | 9' | x 6' | x 0'-9" | 5 | 1.80 | 3" |
| | U | 12' | x 6' | x 0'-9" | 6 | 2.20 | 3" |

## 5.3 Bedding Requirements

Long term stability of riprap and gabion erosion protection is strongly influenced by proper bedding conditions. A large percentage of all riprap failures are directly attributable to bedding failures, which is particularly disturbing in light of the fact that over half of all riprap installations experience some degree of failure within 10 years of construction.

A properly designed bedding provides a buffer of intermediate sized material between the channel bed and the riprap to prevent leaching of channel particles through the voids in the riprap. Two types of bedding are in common use: 1) a granular bedding filter and 2) filter fabric.

### 5.3.1 Granular Bedding

Two methods for establishing gradation requirements for granular bedding are described in this section. The first, a one or two layer bedding, shown in Table 5-3 is adequate for most ordinary riprap,

grouted riprap or wire encased riprap applications. The second utilizes a design procedure developed by Terzaghi, which is referred to as the T-V (Terzaghi-Vicksburg) design (7)(19). The T-V filter criteria establishes an optimum bedding gradation for a specific channel soil. The latter requires channel soil information, including a gradation curve, while the Type I and Type II bedding specifications given in Table 5-3 (and Figure 5-2) are applicable whether or not soil information is available.

Table 5-3
GRADATION FOR GRANULAR BEDDING

| U. S. Standard Sieve Size | Percent Weight By Passing Type I | Square Mesh Sieves Type II |
|---|---|---|
| 3" | - | 90 - 100 |
| 1-1/2" | - | - |
| 3/4" | - | 20 - 90 |
| 3/8" | 100 | - |
| #4 | 95 - 100 | 0 - 20 |
| #16 | 45 - 80 | - |
| #50 | 10 - 30 | - |
| #100 | 2 - 10 | - |
| #200 | 0 - 2 | 0 - 3 |

Table 5-4

THICKNESS REQUIREMENTS FOR GRANULAR BEDDING

| Riprap Designation | Minimum Bedding Thickness (Inches) | | |
|---|---|---|---|
| | Fine Grained Soils* | | Course Grained Soils** |
| | Type I | Type II | Type II |
| L, G, SM | 4 | 4 | 6 |
| M | 4 | 4 | 6 |
| H | 4 | 6 | 8 |
| VH | 4 | 6 | 8 |

*May substitute one 12 inch layer of Type II bedding. Substitution of one layer of Type II bedding shall not be permitted at drop structures. Use of a combination of filter fabric and Type II bedding at drop structures is acceptable, see Section 5.3.2 for use of filter fabric at drop structures.

**Fifty percent or more by weight retained on the #40 sieve.

### 5.3.2 Filter Fabric

Filter fabric is not a complete substitute for granular bedding. Filter fabric provides filtering action only perpendicular to the fabric and has only a single equivalent pore opening between the channel bed and the riprap. Filter fabric has a relatively smooth surface which provides less resistance to stone movement. As a result, it is recommended the use of filter fabric be restricted to slopes no steeper than 2.5h to 1v. Tears in the fabric greatly reduce its effectiveness so that direct dumping of riprap on the filter fabric is not allowed and due care must be exercised during construction. Nonetheless, filter fabric has proven to be an adequate replacement for granular bedding in many instances. Filter fabric provides an adequate bedding for channel linings along uniform mild sloping channels where leaching forces are primarily perpendicular to the fabric.

At drop structures and sloped channel drops, where seepage forces may run parallel with the fabric and cause piping along the bottom surface of the fabric, special care is required in the use of filter

fabric. Seepage parallel with the fabric might be reduced by folding the edge of the fabric vertically downward about 2 feet (similar to a cutoff wall) at 12-foot intervals along the installation, particularly at the entrance and exit of the channel reach. Filter fabric has to be lapped a minimum of 12 inches at roll edges with upstream fabric being placed on top of downstream fabric at the lap.

Fine silt and clay has been found to clog the openings in filter fabric. This prevents free drainage which increases failure potential due to uplift. For this reason, a double granular filter is often a more appropriate bedding for fine silt and clay channel beds. See Figures 5-3 a through 5-3 c for details on acceptable use of filter fabric as bedding.

## 5.4 Channel Linings

Channel linings constructed from ordinary riprap, grouted riprap, or wire encased rock to control channel erosion have been found to be cost effective where channel reaches are relatively short (less than 1/4 mile). Situations for which riprap linings might be appropriate are: 1) where major flows, such as the 100-year flood are found to produce channel velocities in excess of allowable non-eroding values (5 feet per second for sandy soil conditions and 7 feet per second in erosion resistant soils); 2) where channel side slopes must be steeper than 3:1; 3) for low flow channels, and 4) where rapid changes in channel geometry occur such as channel bends and transitions. Design criteria applicable to these situations are presented in this section. Section 5.4 emphasizes design requirements associated with ordinary riprap, while Section 5.5 contains additional design considerations specifically related to wire enclosed rock. Both Sections 5.4 and 5.5 are valid only for subcritical flow conditions where the Froude number is 0.8 or less.

### 5.4.1 Roughness Coefficient

The Manning's roughness coefficient (n) for hydraulic computations has been found to be about 0.035 for wire enclosed rock and may

be estimated for ordinary riprap using:

$$n = .0395\ d_{50}^{\ 1/6}$$

in which $d_{50}$ = the mean stone size in feet.

This equation does not apply to grouted riprap (n = .023 to .030), or to very shallow flow (hydraulic radius is less than or equal to 2 times the maximum rock size) where the roughness coefficient will be greater than indicated by the formula.

### 5.4.2 Rock Size and Lining Dimensions

Table 5-5 summarizes riprap requirements for a stable channel lining based on the following relationship which resulted from Smith and Murray's model studies (24):

$$\frac{VS^{0.17}}{d_{50}^{\ 0.5}\ (S_s-1)^{.66}} = 4.5 \qquad \text{(Equation 5-4)}$$

in which, V = mean channel velocity in feet per second

S = longitudinal channel slope in feet per foot

$S_s$ = Specific gravity of rock (minimum $S_s$ = 2.50)

$d_{50}$ = rock size in feet for which 50 percent of the riprap by weight is smaller.

The rock sizing requirements in Table 5-5 are based on the rock having a specific gravity of 2.5 or more. Rock having specific gravity less than 2.5 is considered unacceptable.

Table 5-5 represents a significant departure from past practices by recognizing that rock size does not need to be increased for steeper channel side slopes, provided the side slopes are no steeper than 2h:1v (24). Rock lined side slopes steeper than 2h:1v are considered unacceptable because of stability, safety, and maintenance considerations. Proper bedding is required both along the side slopes and the channel bottom for a stable lining. The riprap blanket thickness should be <u>at least</u> 1.75 times $d_{50}$ (at least 2.0 times $d_{50}$ in sandy soils) and should extend up the side slopes at least one foot above the design water surface. At the upstream and downstream termination of a riprap lining, the thickness should be increased 50 percent for at least 3 feet to prevent under cutting.

Table 5-5
RIPRAP REQUIREMENTS FOR CHANNEL LININGS **

| $VS^{0.17}/(S_s-1)^{0.66}$* ($ft^{\frac{1}{2}}$/sec) | Rock Type *** |
|---|---|
| 1.4 to 3.2 | VL |
| 3.3 to 3.9 | L |
| 4.0 to 4.5 | M |
| 4.6 to 5.5 | H |
| 5.6 to 6.4 | VH |

* Use $S_s$ = 2.5 unless the source of rock and its densities are known at the time of design.

** Table valid only for Froude number of 0.8 or less and side slopes no steeper than 2h:1v.

*** Type VL and L riprap shall be buried after placement to reduce vandalism.
SM9 slope mattress with toe protection may be substituted for Type VL or L riprap.
G12 gabion with toe protection may be substituted for Type M and Type H riprap.

### 5.4.3 Toe Protection

Where only the channel sides are to be lined, additional riprap is needed to provide for long term stability of the lining. In this case, the riprap blanket should extend at least 3 feet below the existing channel bed and the thickness of the blanket below the existing channel bed increased to at least 3 times $d_{50}$ to accommodate possible channel scour during floods (see Figure 5-4a). For sandy soils, consult specific criteria for channels on sandy soils. If wire enclosed rock lining is used, the toe must be protected by placing riprap at the toe. This is needed to protect against frequently occurring abrasion, (see Figure 5-4b and 5-4c).

### 5.4.4 Channel Bends

The potential for erosion increases along the outside bank of a channel bend due to the acceleration of flow velocities on the outside part of the bend. Thus, it is often necessary to provide erosion protection in channels which otherwise would not need protection. In erosion resistant soils, no extra protection is required by these criteria along bends where the radius is greater than 2 times the top width (as measured for the major flows) but in no case less than 100 feet.

For bank protection requirements in sandy soils, consult the specific criteria for channels on sandy soils. However, for channels in erosion resistant soils not requiring riprap protection along straight sections, channel bends with radii smaller than stated above require Type L or SM9 riprap protection. As stipulated earlier, such riprap needs to be covered with native soil and revegetated in accordance with Section 5.1.1. The minimum allowable radius for a riprap lined bend is 1.2 times the top width of the design flow water surface and in no case less than 50 feet. The riprap protection should be placed along the outside of the bank and should extend downstream from the bend a distance equal to the length of the bend.

Where the mean channel velocity exceeds the allowable non-eroding velocity so that riprap protection is required for straight channel sections, increase the rock size by one category (e.g., Type L to Type M) around bends. The minimum allowable radius for a riprap lined bend in this case is also 1.2 times the top width of the design flow water surface.

### 5.4.5 Transitions

Scour potential is amplified by turbulent eddies in the vicinity of rapid changes in channel geometry such at transitions and bridges. Table 5-5 may be used for selecting riprap protection for subcritical transitions (Froude numbers 0.8 or less) by increasing the channel velocity by twenty (20%) percent.

Since the channel velocity varies through a transition, the maximum velocity in the transition should be used in selecting riprap size after it has been increased by 20%.

Protection should extend upstream from the transition entrance at least 5 feet and extend downstream from the transition exit at least 10 feet.

## 5.5 Wire Enclosed Riprap Linings

The geometric properties of wire enclosed rock permit placement in areas where ordinary riprap is either difficult or impractical to place. Proper design and construction is important to successful operation and lifetime performance. Figures 5-5a and 5-5b depict some of the more common ways wire enclosed rock is configured along channel banks. However, use of wire enclosed riprap lining is is not encouraged, particularly in areas exposed to annual floods, and it is recommended that ordinary riprap be used whenever it is feasible.

### 5.5.1 Side Slope Steeper Than 2h to 1v

Where channel side slopes must exceed 2h to 1v, gabion baskets (G36) may be stacked to form a retaining wall as well as erosion protection along the channel banks as shown in Figure 5-5b. Adjacent baskets should be tied together with heavy gauge wire and adequate protection against channel bed degradation must be provided at the toe of the lining. Stacked baskets must be sloped, or stepped into the bank as shown in Figure 5-5b. Vertical stacking is not acceptable.

### 5.5.2 Counterforts

Channel linings should be tied to the channel banks with gabion (G36) counterforts at least every 12 feet. Counterforts should be keyed at least 12 inches into the existing banks with slope mattress

linings (see Figure 5-5a) and should be keyed at least 3 feet by turning the counterfort gabions end-wise when the lining is designed to serve as a retaining wall (see Figure 5-5b).

### 5.5.3 Slope Mattress Staking

Mattresses and flat gabions on channel side slopes need to be tied to the banks by 2-inch diameter steel pipes driven 4 feet into tight solid (clay) and 6 feet into loose soil (sand) (see Figure 5-5a). The pipes should be located at the inside corners of basket diaphragms along an upslope (highest) basket wall, so that the stakes are an integral part of the basket. The exact spacing of the stakes depends upon the configuration of the baskets, however the following is the suggested minimum spacing: Stakes every six feet along and down the slope, for slopes 2.5 to 1 and steeper and every 9 feet along and down the slope for slopes flatter than 2.5 to 1. Counterforts are optional with slope mattress linings. Slope mattress staking, however, is required, whether or not counterforts are used.

## 5.6 Erosion Protection at Conduit Outlets

Scour resulting from highly turbulent rapidly decelerating flow is a common problem at conduit outlets. The following riprap protection is suggested for outlet Froude numbers up to 2.5 (i.e., Froude parameters $Q/D^{2.5}$ or $Q/WH^{1.5}$ up to 14 $ft.^{0.5}/sec$) where the outlet of the conduit slope is parallel with the channel gradient and the conduit outlet invert is flush with the riprap channel protection. Here Q is the discharge in cubic feet per second, D is the diameter of a circular conduit in feet and W and H are the width and height of a rectangular conduit in feet.

### 5.6.1 Configuration of Riprap Protection

Figure 5-6 illustrates a typical ripraped basin at a conduit outlet. The additional thickness of the riprap just downstream from the outlet is to assure protection from extreme flow conditions which might precipitate rock movement in this region. Note that protection is required under the conduit barrel and an end slope is provided to accommodate degradation of the downstream channel.

### 5.6.2 Required Rock Size

The required rock size may be selected from Figure 5-7 for circular conduits and from Figure 5-8 for rectangular conduits. Figure 5-7 is valid for $Q/D^{2.5}$ of 6.0 or less and Figure 5-8 is valid for $Q/WH^{1.5}$ of 8.0 or less. The parameters in these two figures are:

a. $Q / D^{1.5}$ or $Q/WH^{0.5}$ in which Q is the design discharge in cubic feet per second and D is a circular conduit diameter in feet and W and H are the width and height of a rectangular conduit in feet.

b. $Y_t/D$ or $Y_t / H$ in which $Y_t$ is the tailwater depth in feet, D is the diameter of a circular conduit and H is the height of a rectangular conduit in feet. In cases where $Y_t$ is unknown or a hydraulic jump is suspected downstream of the outlet, use $Y_t / D = Y_t / H = 0.40$ when using Figures 5-7 and 5-8.

c. The riprap size requirements in Figures 5-7 and 5-8 are based on the non-dimensional parametric equations 5-5 and 5-6 (11)(25).

Circular Culvert:

$$(d_{50}/D)(Y_t/D)^{1.2} / (Q/D^{2.5}) = 0.023 \quad \text{(Equation 5-5)}$$

Rectangular Culvert:

$$(d_{50}/D)(Y_t/H) / (Q/WH^{1.5}) = 0.014 \quad \text{(Equation 5-6)}$$

The rock size requirements were determined assuming that the flow in the culvert barrel is not supercritical. It is possible to use Equations 5-5 and 5-6 when the flow in the culvert is less than pipe full and is supercritical if the value of D or H is modified for use in Figures 5-7 and 5-8. Whenever the flow is supercritical in the culvert, substitute $D_a$ for D and $H_a$ for H, in which $D_a$ is defined as

$$D_a = \tfrac{1}{2}(D + Y_n) \quad \text{(Equation 5-7)}$$

in which maximum $D_a$ shall not exceed D, and

$$H_a = \tfrac{1}{2}(H + Y_n) \quad \text{(Equation 5-8)}$$

in which maximum $H_a$ shall not exceed H, and

$D_a$ = A parameter to be used in Figure 5-7

whenever the culvert flow is supercritical.

D = Diameter of a circular culvert in feet.

$H_a$ = A parameter to be used in Figure 5-8 whenever the culvert flow is supercritical

H = Height of a rectangular culvert in feet.

$Y_n$ = Normal depth of supercritical flow in the culvert.

### 5.6.3 Extent of Protection

The length of the riprap protection downstream from the outlet depends on the degree of protection desired. If it is to prevent all erosion, the riprap must be continued until the velocity has been reduced to an acceptable value. For purposes of outlet protection during major floods the acceptable velocity is set at 5.5 fps for very erosive soils and at 7.7 fps for erosion resistant soils. The rate at which the velocity of a jet from a conduit outlet decreases is not well known. For the procedure recommended here it is assumed to be related to the angle of lateral expansions, θ, of the jet. The velocity is related to the expansion factor, (1/(2tan θ)), which may be determined directly using Figure 5-9 or 5-10.

Assuming that the expanding jet has a rectangular shape:

$$L = (1/(2 \tan \theta))(A_t/Y_t - W) \qquad \text{(Equation 5-9)}$$

in which:

L = length of protection in feet,

W = width of the conduit in feet (use diameter for circular conduits),

$Y_t$ = tailwater depth in feet,

$\theta$ = the expansion angle of the culvert flow.

$A_t = Q / V$ (Equation 5-10)

Q = design discharge in cubic feet per second

V = the allowable non-eroding velocity in the downstream channel in feet per second.

$A_t$ = required area of flow at allowable velocity in square feet.

In certain circumstances, Equation 5-9 may yield unreasonable results. Therefore in no case should L be less than 3D or 3H, nor does L need to be greater than 10D or 10H whenever the Froude parameter $Q/WH^{1.5}$ or $Q/D^{2.5}$ is less than 8 or 6 respectively. Whenever the Froude parameter is greater than these maximums, increase the maximum L required by one-fourth D or H for each whole number the Froude parameter is greater than 8 or 6 for rectangular or circular pipe respectively.

## 5.6.4 Multiple Conduit Installations

The procedures outlined in Sections 5.6.1, 5.6.2 and 5.6.3 can be used to design outlet erosion protection for multi-barrel culvert installations, by hypothetically replacing the multiple barrels with a single hydraulically equivalent rectangular conduit. The dimensions of the equivalent conduit may be established as follows: First, distribute the total discharge, Q, among the individual conduits. Where all the conduits are hydraulically similar and identically situated, the flow can be assumed to be equally distributed, otherwise, the flow through each barrel must be computed. Next, compute the Froude parameter $Q_i/D_i^{2.5}$ (circular conduit) or $Q_i/W_iH_i^{1.5}$ (rectangular conduit), where the subscript i indicates the discharge and dimensions associated with an individual conduit. If the installation includes dissimilar conduits, select the conduit with the largest value of the Froude

parameter to determine the dimensions of the equivalent conduit. Make the height of the equivalent conduit, $H_e$, equal to the height, or diameter, of the selected individual conduit. The width of the equivalent conduit, $W_e$, is determined by equating the Froude parameter from the selected individual conduit with the Froude parameter associated with the equivalent conduit, $Q/W_eH_e^{1.5}$.

## 5.7 Examples

### 5.7.1 Example - Design of Granular Bedding

Given: Sandy-silt channel bed with gradation shown by the solid line in Figure 5-11.

Find: The gradation band for granular bedding required to protect the given sandy-silt channel bed.

Step 1: From the gradation curve read:

$d_{15(base)}$ = .016 mm

$d_{50(base)}$ = .051 mm

$d_{85(base)}$ = 0.10 mm

Step 2: The upper limit of $D_{15(filter)} = 5 \times d_{85(base)}$ (Equation 5-1, the upper limit of $D_{15(filter)}$ = 5 x .1 = .5 mm).

Step 3: The upper limit of $D_{15(filter)} = 20 \times d_{15(base)}$ (Equation 5-2, the upper limit of $D_{15(filter)}$ = 20 x .016 = .32 mm).

Since .32 mm < .5 mm, requirement 2 controls. The upper limit for $D_{15(filter)}$ = .32 mm.

Step 4: The lower limit for $D_{15(filter)} = 4 \times d_{15}$ (Equation 5-2, the lower limit for $D_{15(filter)}$ = 4 x .016 = .064 mm).

Step 5: The upper limit for $D_{50(filter)} = 25 \times d_{50}$ (Equation 5-3, the upper limit for $D_{50(filter)} = 25 \times .051 =$ 1.28 mm.

Step 6: Plot the results from Steps 2 through 5 as shown on Figure 5-11.

Step 7: Sketch the upper and lower limits of the gradation requirements for the lowest layer of the bedding. Use the shape of the sandy-silt gradation curve and the plotted points to establish the limits as shown by the dashed lines on Figure 5-11.

Step 8: Establish a gradation for the lowest bedding layer which fits within the gradation band from Step 7.

Step 9: Repeat Steps 1 through 8 using the gradation curve from Step 8 as the base; to establish the required gradation band for the second layer of the bedding. Usually two layers are sufficient.

Step 10: Set the granular bedding thickness of each layer to the thickness of each layer specified in Table 5-4.

### 5.7.2 Example - Single Conduit Outlet Protection

Given: 72 inch (6-ft) diameter culvert at $S_0 = 0.010$ ft/ft and $n = 0.012$.

$D = 6$ ft

$Q = 500$ ft$^3$/s (pipe full flow)

Tailwater depth (normal depth downstream) = 3.0 ft.

Allowable channel velocity downstream = 5.5 ft/s.

$Q = 270\ ft^3/s$

Tailwater depth = 2.1 ft

Allowable channel velocity downstream = 7.7 ft/s

Step 1: Determine flow in each conduit and determine if they are flowing at supercritical depths.

$Q = 270/3 = 90 ft^3/s$

Critical depth at $90 ft^3/s$ = 1.02 ft

Normal depth $Y_n$ at $90\ ft^3/s$ is pipe full flow.

Therefore flow is subcritical and no adjustment is needed to the diameter when using Figure 5-8.

Step 2: Compute Froude Parameter

$F = Q/D^{2.5} = 90/3^{2.5} = 5.77.$

Step 3: Set height of equivalent rectangular conduit

$H_e = D = 3$ ft

Step 4: Calculate the width of an equivalent rectangular culver $W_e$ by equating Froude Parameters using $H_e = 3.0$ ft.

$$\frac{Q}{W_e H_e^{1.5}} = 5.77$$

or

$$W_e = \frac{270}{(5.77)(3)^{1.5}} = 9 \text{ ft}$$

Step 5: Determine type of riprap

$Y_t/H_e = 2.1/3.0 = 0.7$

$Q/W_e H_e^{0.5} = 270/(9x3^{0.5}) = 17.3$

From Figure 5-8: Type L riprap

From Table 5-1: $d_{50}$ = 9 in

Step 6: Determine the expansion factor

$$\frac{Q}{We\ H_e^{3/2}} = \frac{270}{(9)(3)^{1.5}} = 5.77$$

From Figure 5-10: $1/(2\tan\theta) = 4.3$

Step 7: Calculate length of protection

$A_t = (270/7.7) = 35.1\ ft^2$ (Equation 5-10)

$L = 4.3(35.1/2.1 - 9.0) = 33\ ft$ (Equation 5-9)

Step 8: Check if maximum or minimum limits govern

Since $Q/D^{2.5}$ is less than 6.0, then

$L_{max} = 10H = 10(3) = 30\ ft$

Therefore, use L = 30 ft for basin length.

Step 9: Determine maximum riprap depth

From Figure 5-6, maximum depth is $2d_{50} = 2(.75) = 1.50$

Example 2 - Dissimilar Pipes

Given: Double 36 inch (3 ft) culvert

Single 48 inch (4 ft) culvert

All pipes at $S_o = 0.030$ ft/ft and n = 0.012

All outlet inverts are at the same elevation. This procedure can be applied only to such cases. If inverts are not at the same elevation, suggest using a concrete energy disipator.

$Q = 315\ ft^3/s$

Headwater depth = 8 ft

Tailwater depth = 3.0 ft

Allowable channel velocity downstream = 7.7 ft/s

Step 1: Determine the flow in each conduit

Assume inlet control governs

$$\frac{HW}{D_1} = \frac{8}{4} = 2; \quad \frac{HW}{D_2} = \frac{8}{3} = 2.67$$

From highway culvert nomographs for circular pipe having a square edged headwall type entrance

$Q_1 = 145\ ft^3/s$; $Q_2 = 85\ ft^3/s$

Step 2: Determine if any of the pipes are flowing at supercritical depths.

Critical depth for a 48 in circular pipe at 145 $ft^3/s$ is 3.5 ft. Normal depth ($Y_n$), is 2.12 ft. Therefore, this pipe is flowing supercritical.

Critical depth for a 36 inch circular pipe at 85 $ft^3/s$ is 2.79 ft. Normal depth ($Y_n$), is 1.80 ft. Therefore, this pipe is flowing supercritical and inlet control assumption in Step 2 is also valid.

Step 3: Since the culverts are at supercritical flow, determine the modified pipe heights.

For the 48 in pipe

$D_a = 1/2\ (4.0 + 2.12) = 3.06$ ft (Equation 5-7)

For the 36 in pipe

$D_a = 1/2(3.0 + 1.80) = 2.40$ ft

Step 4: Compute Froude Parameters and determine equivalent rectangular height

$F_1 = 145/3.06^{2.5} = 8.85$

$F_2 = 85/2.40^{2.5} = 9.53$

$F_2$ governs, therefore use $H_a = D_a = 2.40$ ft. Note that because $D_a$ is less than the tailwater and the pipe is flowing at supercritical depth, a hydraulic jump downstream of outlet is suspected. Also note that $F_1$

and $F_2$ exceeds the upper limit of 6.0 for circular pipe and the use of riprap or Figures 5-7 and 5-8 would not normally be acceptable. However, for the sake of illustrating the procedure this example utilizes these two Figures for rock size selection.

Step 5: Calculate width of equivalent rectangular culvert $W_e$ for the 3 foot pipe by equating Froude Parameters using

$H_e = 2.40$ ft.

$Q/W_eH_e^{1.5} = 9.53$

$W_e = 315/(9.53)(2.4)^{1.5} = 8.9$ ft.

Step 6: Determine type of riprap

$Y_t/H_e = 3.0/2.40 > 1.0$

Tailwater is greater than approach flow and a hydraulic jump is suspected, therefore in accordance with Paragraph 5.6.2, set $Y_t/H_e = 0.40$ for use with Figure 5-8.

$Q/(W_eH_e^{0.5}) = 315/(8.9x2.40^{0.5}) = 22.8$

From Figure 5-8: Type M riprap

From Table 5-1: $d_{50} = 12$ in

Note the qualification in Step 4 of this example

Step 7: Determine expansion factor $1/(2\tan\theta)$.

$Q/W_eH_e^{1.5} = 9.53$

$Y_t/H_e = 2.4/1.76 = 1.36$

Note that the value of these two parameters is beyond the range of Figure 5-10. Never-the-less, a value of $1/(2\tan\theta)$ is chosen using

$Q/W_eH_e^{1.5} = 6$

and

$Y_t/H_e = 1.0$

Set $1/(2\tan\theta) = 5.6$

Step 8: Determine length of protection

$A_t = 315/7.7 = 40.9\ ft^2$ (Equation 5-10)

$L = 5.6\ (40.9/3.0 - 8.9) = 26.5$ feet. (Equation 5-9)

Step 9: Check if maximum limit governs using the tallest culvert of the three. Since the Froude Parameter for the controlling circular pipe is greater than 6, the upper limit must be increased by one-fourth for each whole Froude Parameter greater than 6. Thus,

$L_{max} = (10 + 0.25\ (9.53 - 6))H$

or

$L_{max} = 10.9H$

$L_{max} = 10.9(4.0) = 43.6$ ft

Since the basin length in Step 8 is less than $L_{max}$, use basin length $L = 26.5$ ft.

Step 1: Determine the required type of riprap for erosion protection.

First check to see if culvert is supercritical. Since the pipe is flowing full $D_a = D = 6$ ft

Then,

$Y_t/D = 3.0/6.0 = 0.5$

$Q/D^{1.5} = 500/6^{1.5} = 34$

From Figure 5-7 -- Type VH riprap will be required

From Table 5-1 -- $d_{50} = 24$ in

Step 2: Determine the expansion factor $1/(2\tan\theta)$.

$Q/D^{2.5} = 500/6^{2.5} = 5.67$

From Figure 5-9 -- $1/(2\tan\theta) = 2.8$

Step 3: Determine the length of riprap protection

$A_t = 500/5.5 = 91$ ft$^2$ (Equation 5-10)

$L = 2.8\ (91/3 - 6) = 68$ ft (Equation 5-9)

Step 4: Check if maximum or minimum limit governs

Since $Q/D^{2.5}$ is less than 6.0, then

$L_{max} = 10D = 10(6) = 60$ ft

Therefore, use 60 feet for basin length.

Step 5: Determine the maximum riprap depth

From Figure 5-6, maximum depth = $2\ d_{50} = 2(2) = 4$ ft

## 5.7.3 Examples - Multiple Conduit Outlet Protection

### Example 1 - Similar Pipes

Given: Triple 36 inch (3-foot) culvert at $S_o = 0.010$ ft/ft

$n = 0.012$

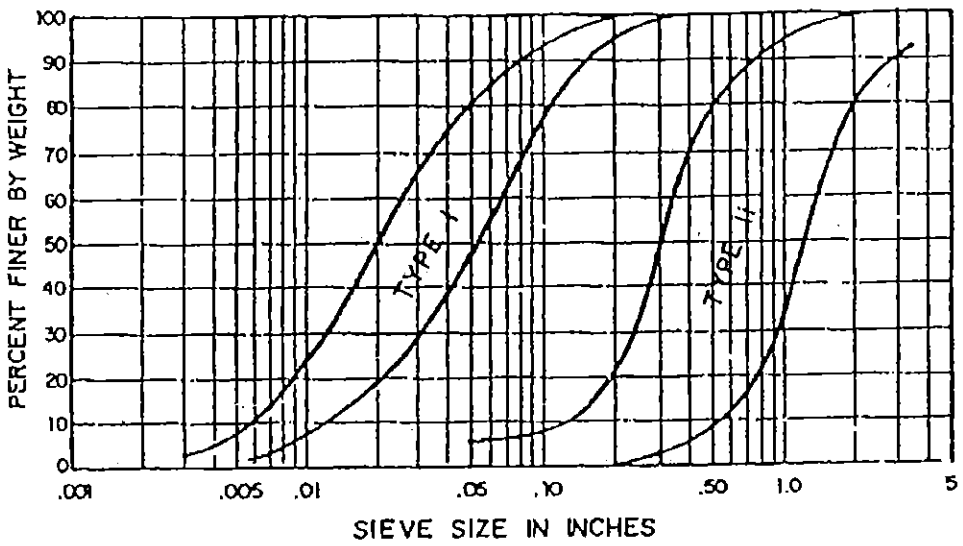


FIGURE 5-2. GRADATION CURVES FOR GRANULAR BEDDING

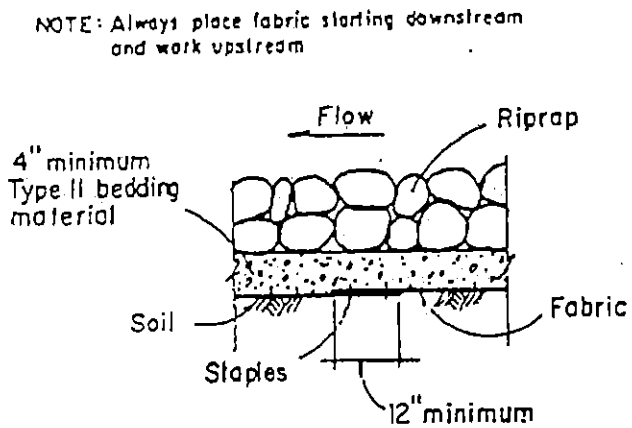


FIGURE 5-3a. TYPICAL LAP DETAIL AND FILTER FABRIC PLACEMENT

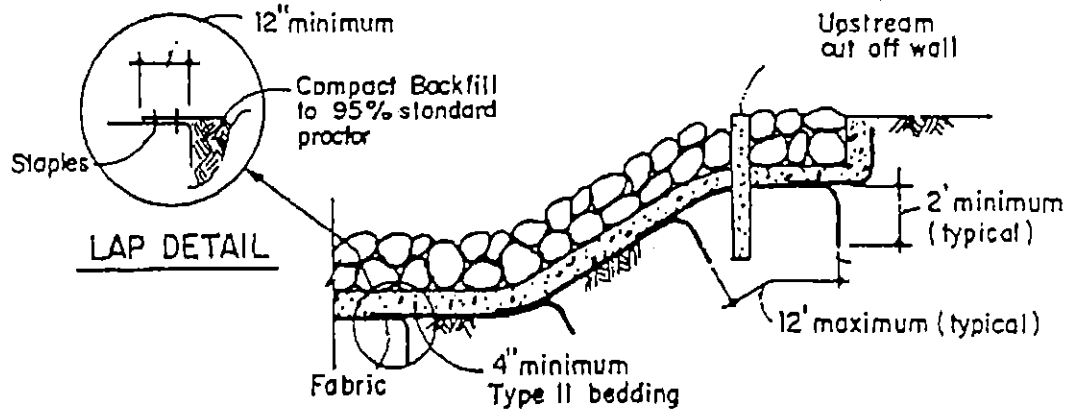


FIGURE 5-3b. FILTER FABRIC AT RIPRAP CHUTE DROP

NOTE: Some soils may require a hydraulic cut off to prevent piping failure of drops

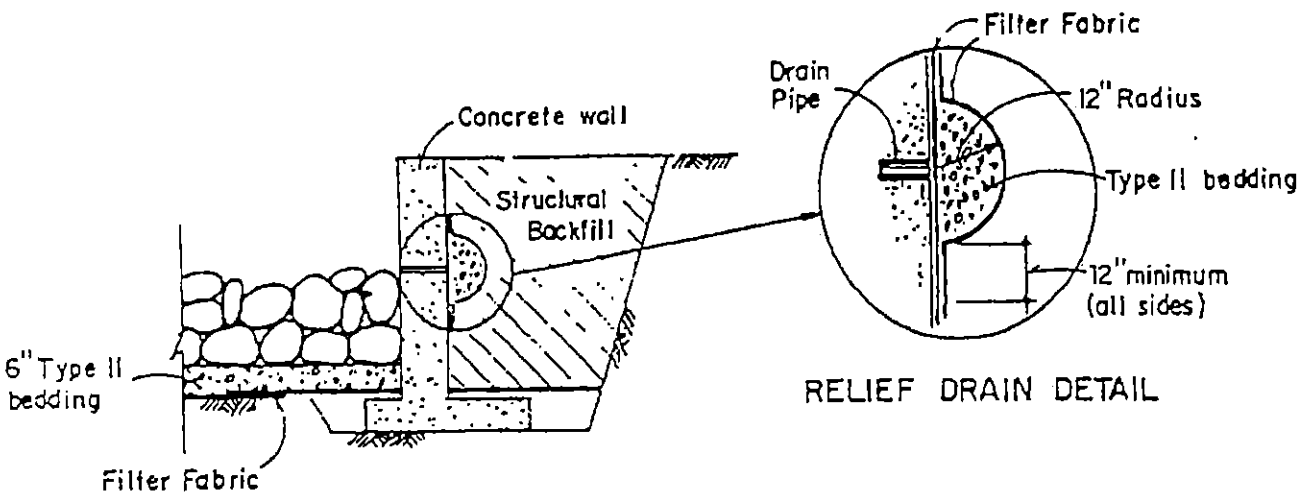


FIGURE 5-3c. FILTER FABRIC PLACEMENT VERTICAL DROP

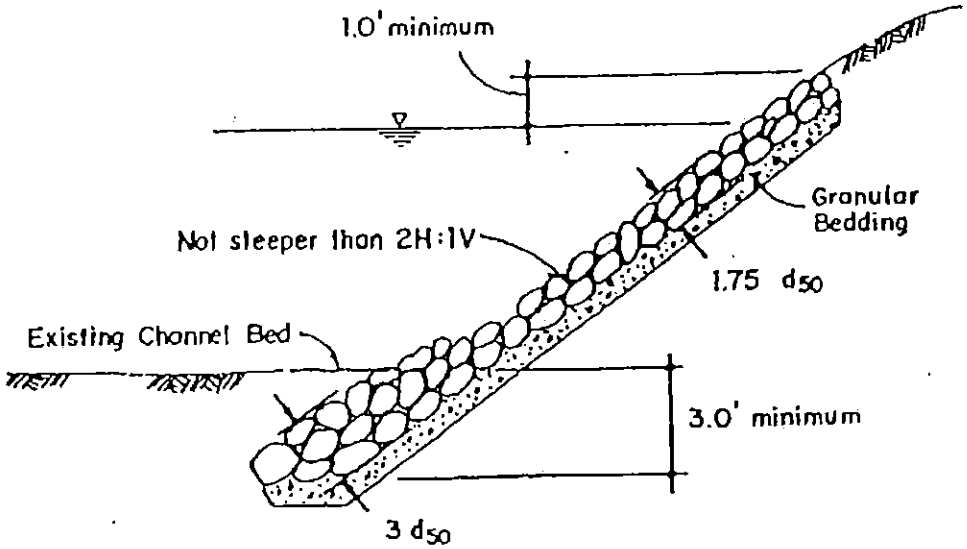


FIGURE 5-4a. TOE PROTECTION RIPRAP CHANNEL LINING

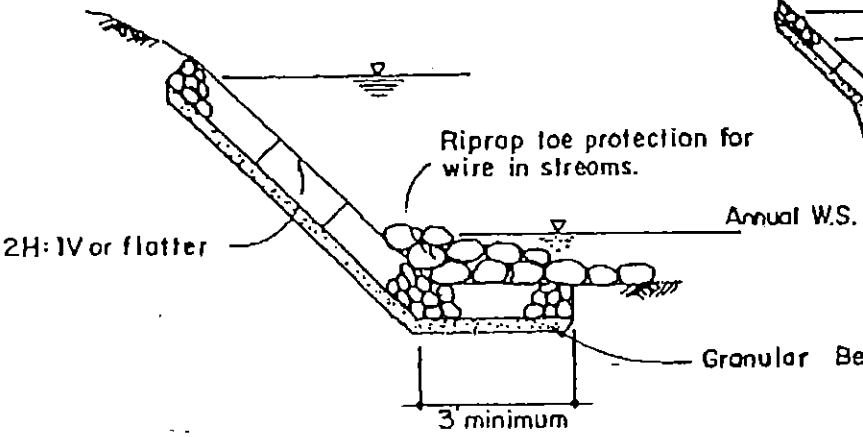


FIGURE 5-4b.

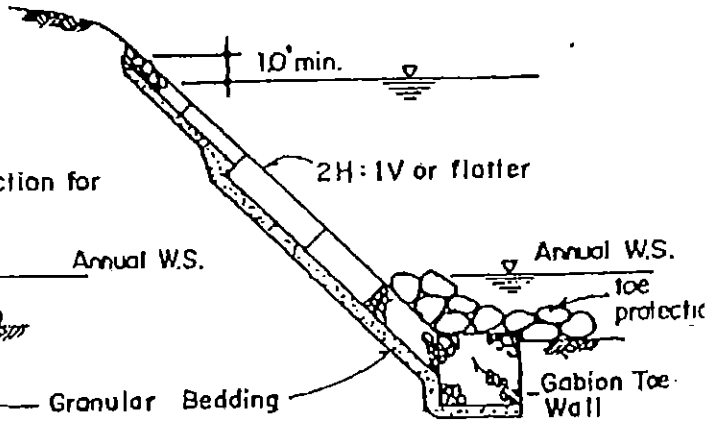


FIGURE 5-4c.

TOE PROTECTION WIRE ENCLOSED ROCK LINING

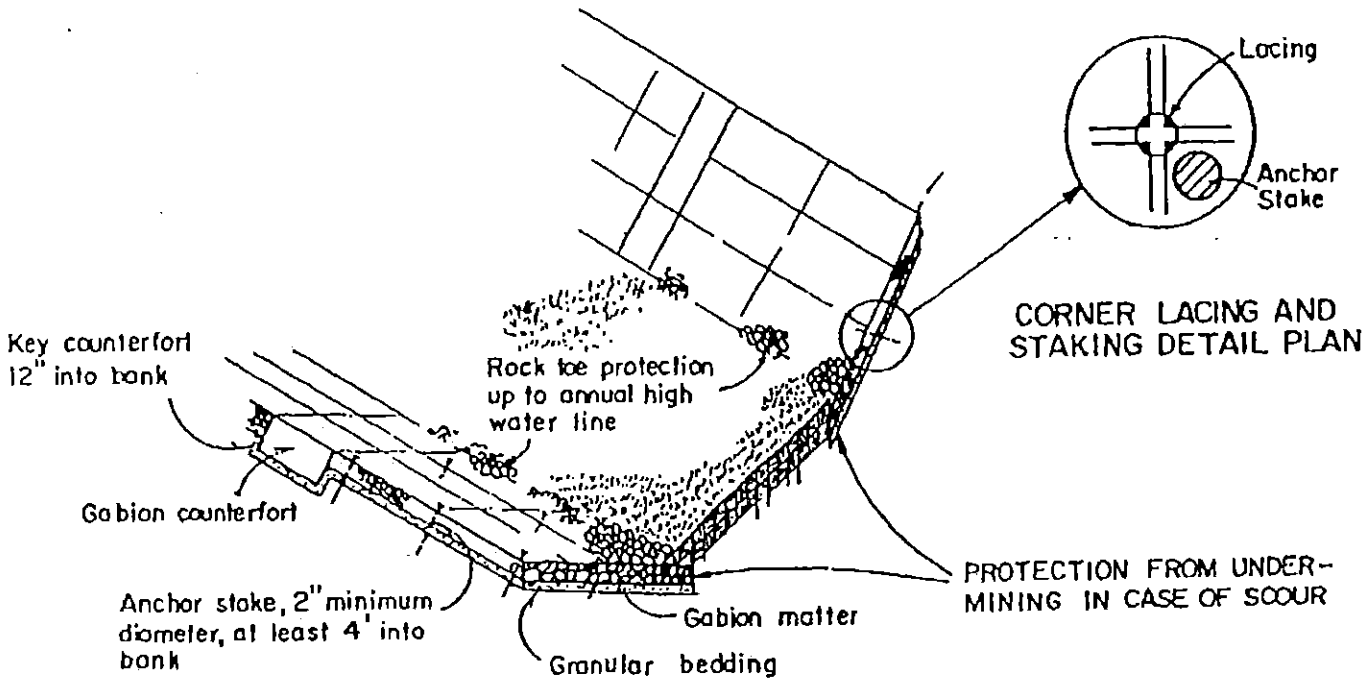


FIGURE 5-5a. SLOPE MATTRESS LINING

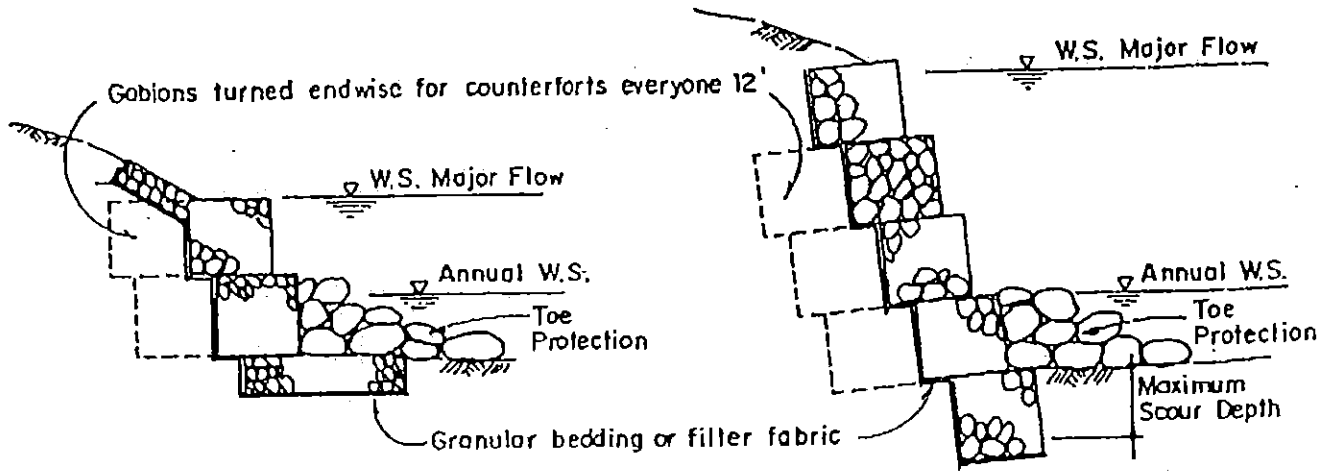


FIGURE 5-5b. GABION LINING CONFIGURATIONS

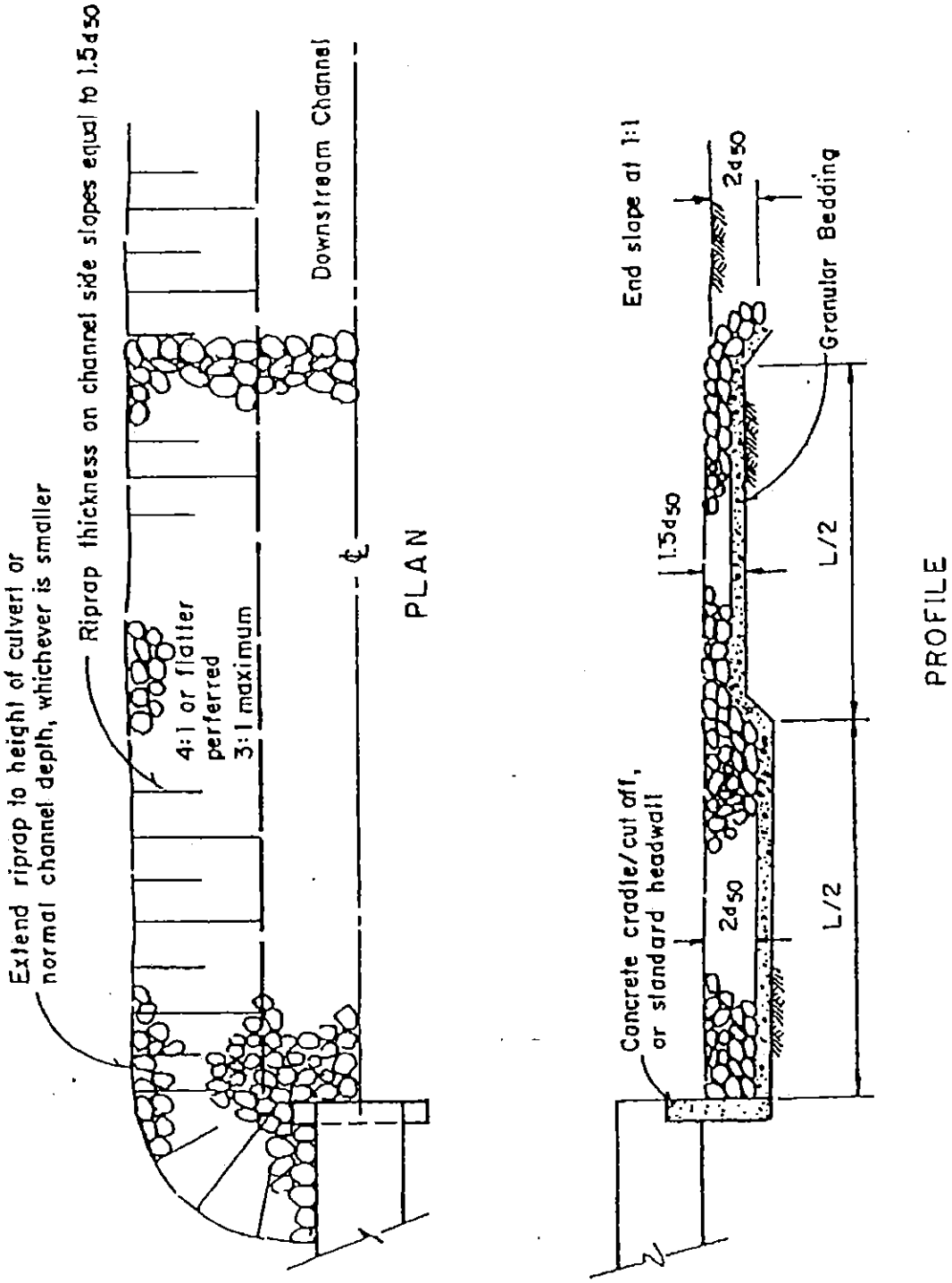


FIGURE 5-6. CONDUIT OUTLET EROSION PROTECTION

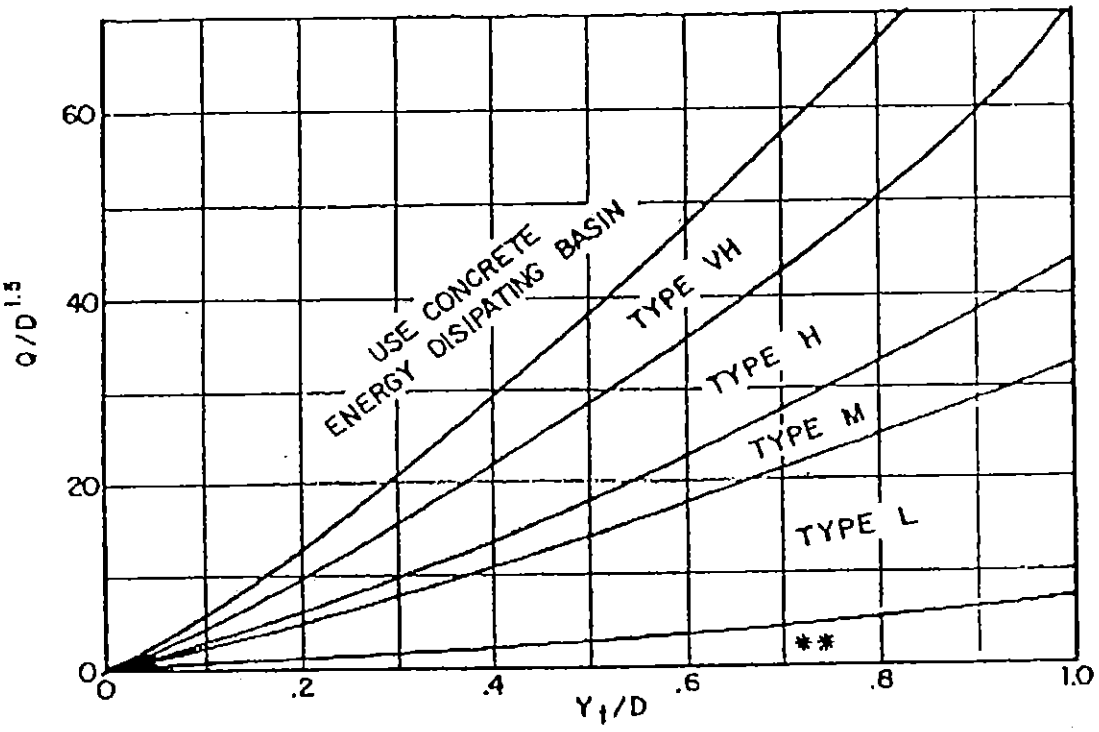


Use $D_a$ instead of D whenever flow is supercritical in the barrel.
** Use Type L for a distance of 3D downstream.

FIGURE 5-7. RIPRAP EROSION PROTECTION AT CIRCULAR CONDUIT OUTLET.

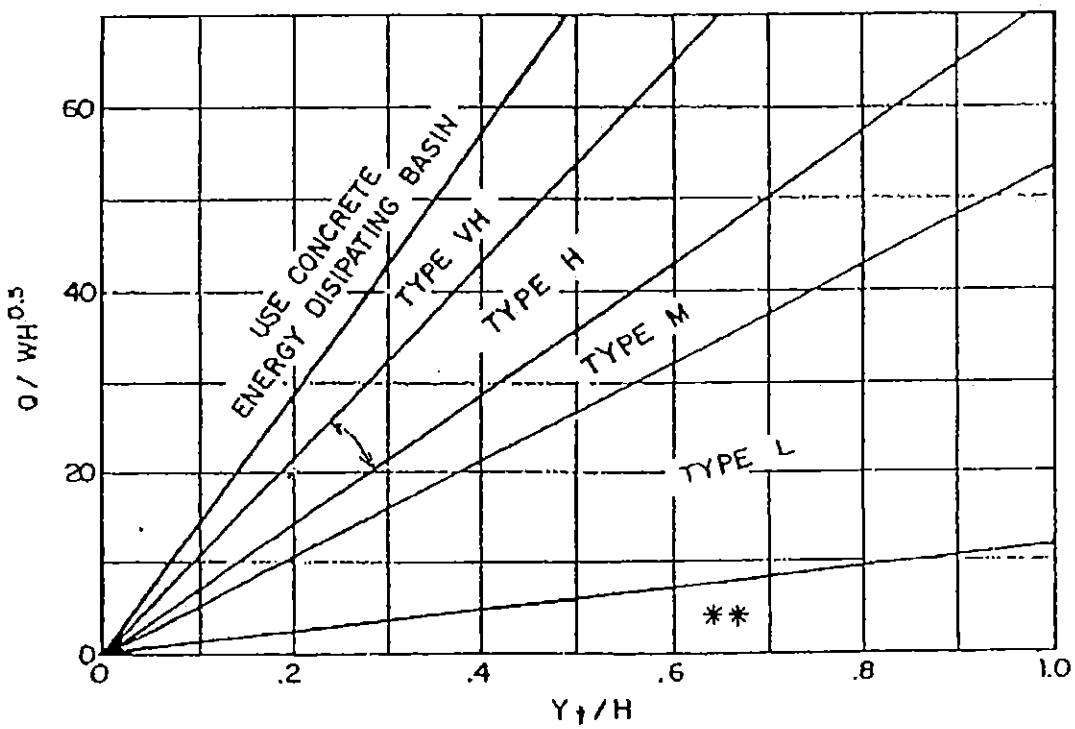


Use $H_a$ instead of H whenever culvert has supercritical flow in the barrel.
**Use Type L for a distance of 3H downstream.

FIGURE 5-8. RIPRAP EROSION PROTECTION AT RECTANGULAR CONDUIT OUTLET.

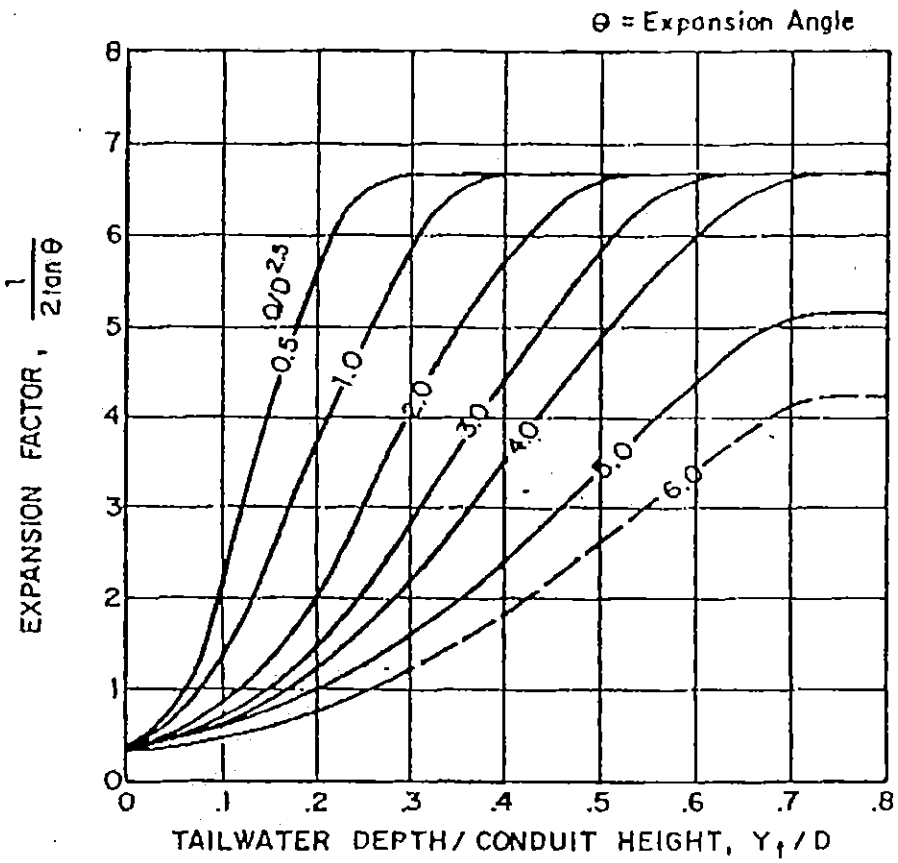


FIGURE 5-9. EXPANSION FACTOR FOR CIRCULAR CONDUITS

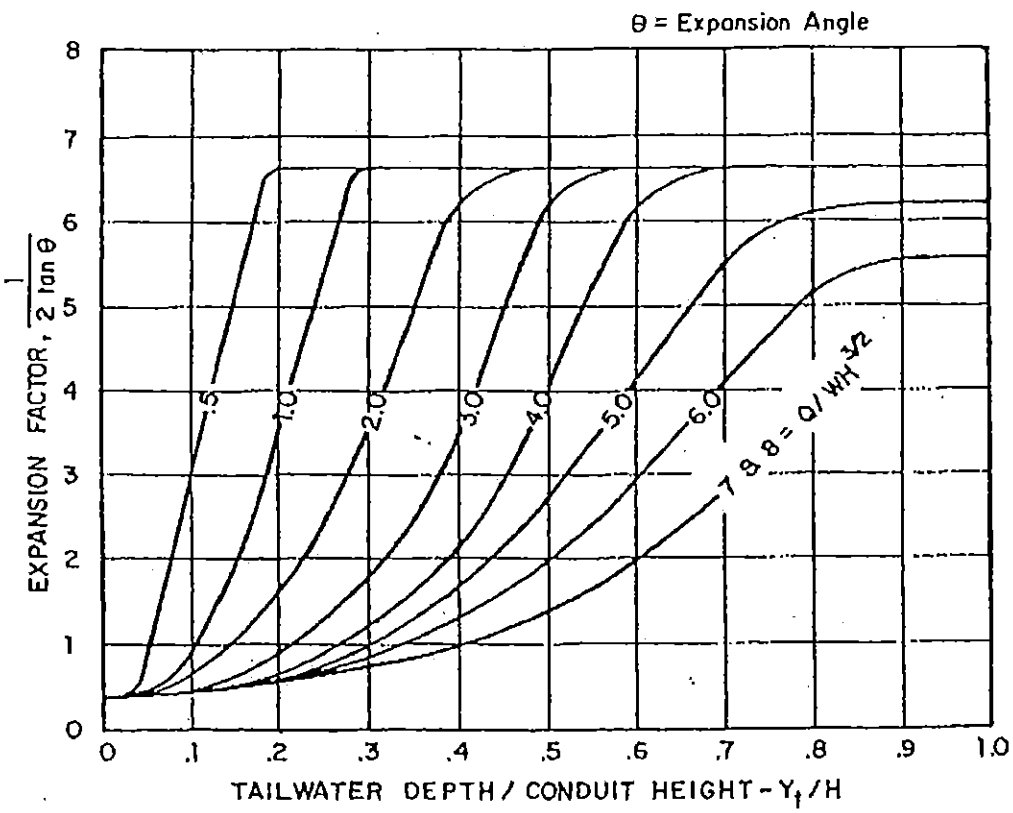


FIGURE 5-10. EXPANSION FACTOR FOR RECTANGULAR CONDUITS

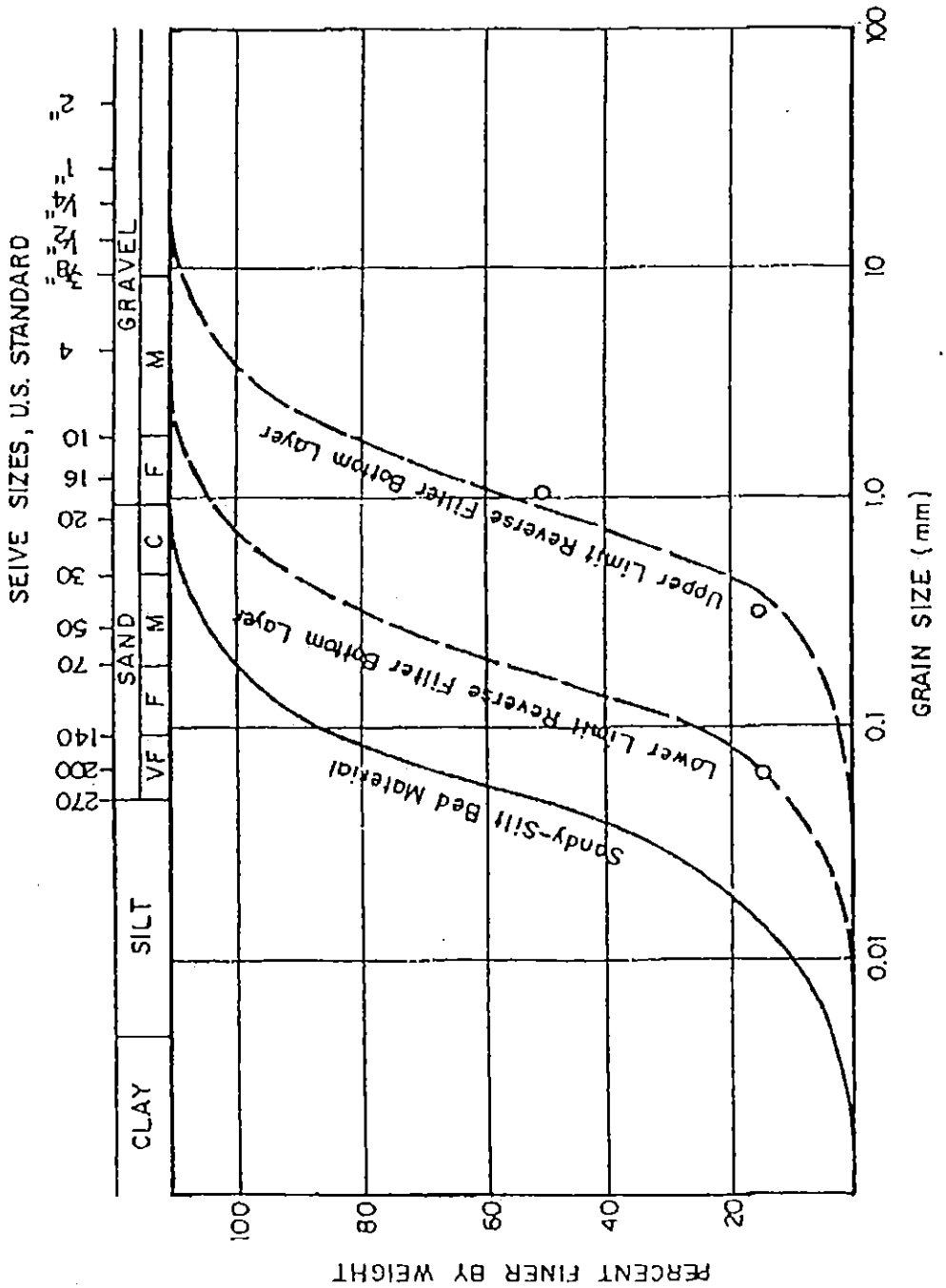


FIGURE 5-11. EXAMPLE GRANULAR FILTER DESIGN

( )

( )

( )