Water Quality Control Division **Implementation Policy** **Colorado Department Of Public Health And Environment**	Implementation Policy Number: **CW 6**
	Statutory or Regulatory Citations: 61.4, 61.8(2)(m), 61.8(4)(j) 85.6(4)(c) 31.14 (9) 41.5(C)(4)
	Key Words: Practical Quantitation Limits
TITLE: Practical Quantitation Limits (PQLs)	Approved By: (Signature of Program Manager) Dick Parachini Digitally signed by Dick Parachini DN: dc=local, dc=dphe, ou=Divisions, ou=WQC, ou=Users, cn=Dick Parachini, email=dick.parachini@state.co.us Date: 2015.02.03 11:15:57 -07'00' Dick Parachini, Manager, Clean Water Program
	Drafted by: Kenan Diker, Janet Kieler, Kelly Morgan, Kristy Richardson
	Effective Date: February 3, 2015
	Originally Approved and Effective: December 30, 2014
	Scheduled Review Date: January 1, 2020

Background and Purpose of the Modification

This policy is being modified to address editorial and formatting changes. During the modification the Division noticed that the lowest surface/groundwater quality standards for Molybdenum and Total Dissolved Solids were recorded as 210 µg/L and 500 mg/L in Table 1, respectively. The Division has replaced these values with 160 µg/L and 400 mg/L in Table 1 and added new footnotes for these parameter.

PQLs

PQLs established by the Division for statewide use are listed in Tables 1 and 2 on the following pages

Table 1
2014 Practical Quantitation Limits – Metals, Inorganics, Nutrients, Radiological Parameters, and Nonylphenol

Parameter	Reporting Units	Lowest Surface/ Groundwater Quality Std	PQL
Aluminum	µg/ L [1]	73 [6]	15
Antimony	µg/ L	5.6 [5]	2
Arsenic	µg/ L	0.02 [5]	1
Barium	µg/ L	490 [5]	1
Beryllium	µg/ L	4.0 [5]	2
Boron	µg/ L	750 [4]	20
Cadmium	µg/ L	0.15 [6]	0.5
Calcium	µg/ L		120
Chromium	µg/ L	50 [13]	20
Chromium, Trivalent	µg/ L	24 [6]	
Chromium, Hexavalent	µg/ L	11 [5]	20 [14]
Copper	µg/ L	2.7 [6]	2
Iron	µg/ L	300 [5]	20 [14]
Lead	µg/ L	0.5 [6]	0.5
Magnesium	µg/ L		35
Manganese	µg/ L	50 [5]	2
Mercury	µg/ L	0.01 [5]	0.2 [14]
Mercury, Low Level	µg/ L	0.01 [5]	0.002
Molybdenum	µg/ L	160 [15]	0.5
Nickel	µg/ L	16 [6]	1
Selenium	µg/ L	4.6 [5]	1 [14]
Silver	µg/ L	0.01 [6]	0.5
Sodium	µg/ L		150
Thallium	µg/ L	0.24 [5]	0.5
Zinc	µg/ L	6.1 [6]	10
Ammonia Nitrogen	mg/L [2] N		0.2
Nitrate+Nitrite Nitrogen	mg/L N		0.1
Nitrate Nitrogen	mg/L N	10 [4]	0.1
Nitrite Nitrogen	mg/L N	1.0 [4]	0.05
Total Kjeldahl Nitrogen	mg/L N		0.5
Total Nitrogen	mg/L N	0.426 [8]	0.5
Total Inorganic Nitrogen	mg/L N	7 [9]	0.2
Phosphorus	mg/L P	0.025 [8]/0.083 [8]/ 0.7[9]	0.05 [14]

Parameter	Reporting Units	Lowest Surface/ Groundwater Quality Std	PQL
BOD/CBOD	mg/L	25 [10]	2
Chloride	mg/L	250 [4, 12]	2
Total Residual Chlorine, DPD	mg/L	0.011 [4]	0.5
Total Residual Chlorine, Amperiometric	mg/L	0.011 [4]	0.05
Cyanide	µg/ L	5 [4]	10 [14]
Fluoride	mg/L	2 [4]	0.5
Phenols	µg/ L	2100 [7]	30
Sulfate	mg/L	250 [4, 12]	2
Sulfide	mg/L H_2S	0.002 [4]	0.1
Total Dissolved Solids (TDS)	mg/L	400 [16]	10
Total Suspended Solids (TSS)	mg/L	25 [10]	5
Radium-226	pCi/L	5 [3,7]	1
Radium-228	pCi/L	5 [3,7]	1
Uranium	µg/ L	16.8 [5]	1
Nonylphenol, ASTM D7065	µg/ L	6.6 [7]	10

[1] ug/L = micrograms per liter
[2] mg/L = milligrams per liter
[3] Total of Ra 226 and Ra 228
[4] WQCD Regulation 31, Table II
[5] WQCD Regulation 31, Table III
[6] WQCD Regulation 31, Table IV
[7] WQCD Regulation 31, Section 31.11
[8] WQCD Regulation 31, Interim Values
[9] WQCD Regulation 85, Lowest Limitation
[10] NPDES Discharge Permit - lowest limit
[11] Primary Drinking Water Standard
[12] Secondary Drinking Water Standard
[13] WQCD Regulation 31, Table III, Footnote 5
[14] PQL established based on parameter specific evaluation
[15] Site Specific Regulation(s)
[16] WQCD Regulation 41

Table 2
2008 Practical Quantitation Limits - Organic Compounds

Compound Name	CAS #[1/]	Lowest Surface/ Groundwater Quality Std. (ug/L)[2/]	PQL-Robust (ug/L)	PQL-Minimum (ug/L)	PQL_{NN}[3/] - Robust (ug/L)	PQL_{NN} - Minimum (ug/L)
1,2 Dibromo-3-Chloropropane	96-12-8	0.2	TBD [4/]	TBD	15	4.5
1,2,3,7,8,9-Hexachlorodibenzo-p-dioxin	19408-74-3	0.0000056	TBD	TBD	None [5/]	None
2,2'-Dichloroisopropyl ether	108-60-1	280	60	NR [6/]	NR	NR
2,3,7,8-Tetrachlorodibenzo-p-dioxin	1746-01-6	5.0×10^{-9}	TBD	TBD	1	None
4,4'-Methylene bis(N,N'-dimethyl)aniline	101-61-1	0.76	TBD	TBD	None	None
4-Chloro-3-methylphenol	59-50-7	30	30	NR	NR	NR
Acenaphthene	83-32-9	420	20	NR	NR	NR
Acenaphthylene	208-96-8	NA [7/]	30	25	NR	NR
Acrolein	107-02-8	3.5	15	None	>PQLR [8/]	0.45 (DW) [9/]
Acrylamide	79-06-1	0.0078	TBD	TBD	100	None
Acrylonitrile	107-13-1	0.051	5.3	None	>PQLR	None
Alachlor	15972-60-8	2	TBD	TBD	15	2 (DW)
Aldicarb	116-06-3	7	TBD	TBD	None	1
Aldicarb Sulfone	1646-88-4	7	TBD	TBD	None	10 (DW)
Aldicarb Sulfoxide	1646-87-3	7	TBD	TBD	None	6 (DW)
Aldrin	309-00-2	0.000049	0.05	None	>PQLR	None
Aniline	62-53-3	6.1	TBD	TBD	20	None
Anthracene	120-12-7	2100	20	NR	NR	NR
Aramite	140-57-8	1.4	TBD	TBD	35	20
Atrazine	1912-24-9	3	TBD	TBD	150	1.0 (DW)
Azobenzene	103-33-3	0.32	TBD	TBD	50	None
Benzene	71-43-2	2	3	None	0.5	NR
Benzidine	92-87-5	0.000086	170	None	>PQLR	None
Benzo(a)anthracene	56-55-3	0.0038	12	0.1	None	0.06
Benzo(a)pyrene	50-32-8	0.0038	20	0.2	None	0.07
Benzo(b)fluoranthene	205-99-2	0.0038	35	0.20	None	0.05
Benzo(g,h,i)perylene	191-24-2	0.0038	20	1.0	None	0.070
Benzo(k)fluoranthene	207-08-9	0.0038	25	0.20	None	0.060
Benzotrichloride	98-07-7	0.0027	TBD	TBD	None	None
Benzyl chloride	100-44-7	0.21	TBD	TBD	100	None
Bis(2-ethylhexyl) adipate	103-23-1	400	TBD	TBD	None	1 (DW)
bis(2-Ethylhexyl) phthalate	117-81-7	1.2	25	None	None	3.0
Bis(chloromethyl)ether (BCME)	542-88-1	0.0001	TBD	TBD	None	None
Bromate	15541-45-4	0.05	TBD	TBD	15	None
Bromodichloromethane	75-27-4	0.55	2.5	None	1	0.05 (DW)
Bromoform	75-25-2	4.3	3.0	NR	NR	NR
Butyl benzyl phthalate	85-68-7	1400	25	NR	NR	NR
Carbofuran	1563-66-2	35	TBD	TBD	None	5
Carbon tetrachloride	56-23-5	0.23	3	None	2	1 (DW)
Chlordane	57-74-9	0.0008	0.14	None	>PQLR	None

Compound Name	CAS #[1/]	Lowest Surface/ Groundwater Quality Std. (ug/L)[2/]	PQL-Robust (ug/L)	PQL-Minimum (ug/L)	PQL_{NN}[3/] - Robust (ug/L)	PQL_{NN} - Minimum (ug/L)
Chlorobenzene	108-90-7	100	60	NR	NR	NR
Chlorodibromomethane	124-48-1	14	3	NR	NR	NR
Chloroform	67-66-3	3.4	3	NR	NR	NR
Chloromethane	74-87-3	5.6	3.5	NR	NR	NR
Chloronapthalene	91-58-7	560	20	NR	NR	NR
Chlorophenol or (2-Chlorophenol)	95-57-8	35	35	NR	NR	NR
Chlorpyrifos	2921-88-2	0.041	TBD	TBD	0.2	None
Chrysene	218-01-9	0.0038	18	1.5	None	0.08
cis-1,2-Dichloroethylene	156-59-2	70	TBD	TBD	5	NR
Dalapon	75-99-0	200	TBD	TBD	None	6
DDD 4,4'	72-54-8	0.00031	0.11	None	None	None
DDE (4,4'-DDE)	72-55-9	0.00022	0.04	NONE	>PQLR	>PQLM [10/]
Demeton	8065-48-3	0.1	TBD	TBD	None	2.5
Dibenz(a,h)anthracene	53-70-3	0.0038	20	0.5	None	0.065
Dichloroacetic acid	79-43-6	0.7	None	None	None	2.5 (DW)
Dichlorobenzene 1,2	95-50-1	600	2.5	NR	NR	NR
Dichlorobenzene 1,3	541-73-1	94	2.5	NR	NR	NR
Dichlorobenzene 1,4	106-46-7	63	3.5	NR	NR	NR
Dichlorobenzidine	91-94-1	0.021	18	None	None	1
Dichloroethane 1,2	107-06-2	0.38	3.0	None	1	0.2 (DW)
Dichloroethyl ether	111-44-4	0.03	15	None	None	0.5
Dichloroethylene 1,1	75-35-4	7	5.0	NR	NR	NR
Dichlorophenol 2,4	120-83-2	21	30	None	None	0.5
Dichlorophenoxyacetic acid (2,4-D)	94-75-7	70	TBD	TBD	None	5.5
Dichloropropane 1,2	78-87-5	0.5	2	None	0.5	NR
Dichloropropylene 1,3	542-75-6	0.34	TBD	TBD	2.5	1.5
Dichlorvos	62-73-7	0.12	TBD	TBD	None	3
Dieldrin	60-57-1	0.000052	0.02	None	>PQLR	None
Diethyl phthalate	84-66-2	5600	20	NR	NR	NR
Diisopropylmethylphosphonate	1445-75-6	8	TBD	TBD	None	1.5
Dimethyl phthalate	131-11-3	70000	20	NR	NR	NR
Dimethylphenol 2,4	105-67-9	140	30	NR	NR	NR
Di-n-butyl phthalate	84-74-2	700	25	NR	NR	NR
Dinitro-o-cresol 4,6	534-52-1	0.27	17	None	None	None
dinitrophenol 2,4	51-28-5	14	100	None	None	20
Dinitrotoluene 2,4	121-14-2	0.11	17	None	None	0.5
Dinitrotoluene 2,6	606-20-2	230	20	NR	NR	NR
Dinoseb	88-85-7	7	TBD	TBD	25	0.5
Dioxane 1,4	123-91-1	3.2	TBD	TBD	500	None
Diphenylhydrazine 1,2	122-66-7	0.036	TBD	TBD	30	20
Diquat	85-00-7	15	TBD	TBD	None	7.5 (DW)
Endosulfan	115-29-7	0.056	0.2	None	None	None
Endosulfan sulfate	1031-07-8	0.056	0.2	None	0.060	None
Endosulfan, alpha	959-98-8	0.056	TBD	TBD	0.1	0.06

Compound Name	CAS #[1/]	Lowest Surface/ Groundwater Quality Std. (ug/L)[2/]	PQL-Robust (ug/L)	PQL-Minimum (ug/L)	PQL_{NN}[3/] - Robust (ug/L)	PQL_{NN} - Minimum (ug/L)
Endosulfan, beta	3321-36-59	0.056	0.05	NR	NR	NR
Endothall	145-73-3	100	TBD	TBD	None	25 (DW)
Endrin	72-20-8	0.036	0.06	None	>PQLR	None
Endrin aldehyde	7421-93-4	0.29	0.25	NR	NR	NR
Epichlorohydrin	106-89-8	3.5	TBD	TBD	None	None
Ethyl parathion	56-38-2	0.013	TBD	TBD	30	4.5
Ethylbenzene	100-41-4	530	75	NR	NR	NR
Ethylene dibromide	106-93-4	0.00041	TBD	TBD	1.5	1
Fluoranthene	206-44-0	130	25	NR	NR	NR
Fluorene	86-73-7	280	20	NR	NR	NR
Folpet	133-07-3	10	TBD	TBD	None	None
Furmecyclox	60568-05-0	1.2	TBD	TBD	None	None
Glyphosate	1071-83-6	700	TBD	TBD	7.0	NR
Guthion	86-50-0	0.01	TBD	TBD	None	4.5
Heptachlor	76-44-8	$7.8X10^{-5}$	0.03	None	>PQLR	None
Heptachlor epoxide	1024-57-3	$3.9X10^{-5}$	0.15	None	0.075	None
Hexachlorobenzene	118-74-1	0.00028	16	0.030	>PQLR	>PQLM
Hexachlorobutadiene	87-68-3	0.44	9	None	1	0.5(DW)
Hexachlorocyclohexane, Alpha	319-84-6	0.0026	0.03	None	>PQLR	None
Hexachlorocyclohexane, Beta	319-85-7	0.0091	0.06	None	>PQLR	None
Hexachlorocyclohexane, Technical	608-73-1	0.012	TBD	TBD	None	None
Hexachlorocyclopentadiene	77-47-4	5	50	None	None	0.5
Hexachloroethane	67-72-1	0.4	16	None	None	3.0
Hydrazine	302-01-2	0.012	TBD	TBD	None	50
Indeno(1,2,3-cd)pyrene	193-39-5	0.0038	20	0.5	None	0.45
Isophorone	78-59-1	130	25	NR	NR	NR
Lindane	58-89-9	0.08	0.05	NR	NR	NR
Malathion	121-75-5	0.1	TBD	TBD	0.01	None
Methoxychlor	72-43-5	0.03	TBD	TBD	0.5	0.15
Methyl Bromide	74-83-9	9.8	5	NR	NR	NR
Methylene chloride	75-09-2	4.6	4.5	NR	NR	NR
Mirex	2385-85-5	0.001	TBD	TBD	0.1	None
Naphthalene	91-20-3	140	20	NR	NR	NR
Nitrobenzene	98-95-3	3.5	19	None	None	1.5
Nitrophenol 4	100-02-7	56	25	NR	NR	NR
Nitrosodibutylamine N	924-16-3	0.0043	None	None	80	None
Nitrosodiethylamine N	55-18-5	0.00023	TBD	TBD	30	None
Nitrosodimethylamine N	62-75-9	0.00069	30	None	None	1
Nitrosodiphenylamine N	86-30-6	3.3	19	None	None	0.5
Nitrosopyrrolidine N	930-55-2	0.016	TBD	TBD	20	None
N-Nitrosodiethanolamine	1116-54-7	0.013	TBD	TBD	None	None
N-Nitrosodi-n-propylamine	621-64-7	0.005	30	None	None	0.5
N-Nitroso-N-methylethylamine	10595-95-6	0.0016	TBD	TBD	None	None
Oxamyl	23135-22-0	175	TBD	TBD	None	4

Compound Name	CAS #[1/]	Lowest Surface/ Groundwater Quality Std. (ug/L)[2/]	PQL-Robust (ug/L)	PQL-Minimum (ug/L)	PQL_{NN}[3/] - Robust (ug/L)	PQL_{NN} - Minimum (ug/L)
PCBs	1336-36-3	$6.4X10^{-5}$	2	None	>PQLR	None
Pentachlorobenzene	608-93-5	1.4	TBD	TBD	20	None
Pentachlorophenol	87-86-5	0.27	36	None	None	1.5
Phenanthrene	85-01-8	NA	25	6.5	NR	NR
Phenol	108-95-2	2100	15	NR	NR	NR
Picloram	1918-02-1	490	TBD	TBD	None	0.6
Propylene oxide	75-56-9	0.15	TBD	TBD	None	None
Pyrene	129-00-0	210	10	NR	NR	NR
Quinoline	91-22-5	0.012	TBD	TBD	20	None
Simazine	122-34-9	4	TBD	TBD	None	7.5
Styrene	100-42-5	100	TBD	TBD	3.0	NR
Tetrachlorobenzene 1,2,4,5	95-94-3	0.97	TBD	TBD	90	None
Tetrachloroethane 1,1,2,2	79-34-5	0.17	2	None	None	None
Tetrachloroethylene	127-18-4	0.69	2.3	None	1.5	0.5 (DW)
Toluene	108-88-3	1000	60	NR	NR	NR
Toxaphene	8001-35-2	0.0002	2.4	None	>PQLR	1.5 (DW)
trans-1,2-Dichloroethylene	156-60-5	100	TBD	TBD	20	NR
Trichlorobenzene 1,2,4	120-82-1	35	20	NR	NR	NR
Trichloroethane 1,1,1	71-55-6	200	5	NR	NR	NR
Trichloroethane 1,1,2	79-00-5	2.7	2.0	NR	NR	NR
Trichloroethylene	79-01-6	2.5	2.3	NR	NR	NR
Trichlorophenol 2,4,6	88-06-2	1.4	25	None	None	None
Trichlorophenoxypropionic acid (2,4,5-tp) or (Silvex)	93-72-1	50	None	None	None	4.5
Vinyl chloride	75-01-4	0.023	3	None	2	0.4 (DW)
Xylenes (total)	1330-20-7	1400	TBD	TBD	7.0	NR

1/ CAS# = Chemical Abstracts Service Registry number
2/ ug/L = micrograms per liter
3/ PQL_{NN} = Practical Quantitation Limit Derived from a non-NPDES/WQCD approved method
4/ TBD = To be determined - No Commercially available NPDES method
5/ None = Indicates no PQL is available
6/ NR – PQL Minimum value is Not Required since PQL Robust is less than or equal to lowest water quality standard.
7/ NA = Not Applicable - no standard available
8/ PQLR = PQL Robust
9/ DW = Indicates a PQL from a drinking water method
10/ PQLM = PQL Minimum

Definitions and Explanation of Terms:

1. Alternative Test Procedure (ATP) means a way in which an analyte is identified and quantified that is reviewed and approved by EPA in accordance with 40 CFR Part 136.4 for nationwide use, or a modification to a 40 CFR 136 approved-method that is reviewed and approved by EPA for in accordance with 40 CFR Part 136.5 for limited use. EPA allows flexibility for method modifications without EPA review as described in 40 CFR Part 136.6 and in situations where those requirements are met and documented, the method modification is not considered by EPA to be an ATP and is considered to be an equivalent and acceptable alternative to the approved method.

   This term was originally defined in the Water Quality Control Division's (the "Division") Practical Quantitation Limitation Guidance Document, July 2008 (the "2008 Guidance"). The definition of the term was revised for the 2014 Policy to clarify that the term applies to the ATP program defined by EPA in regulation and not to any changes in method techniques that do not conform to those program requirements, such as changes to method techniques approved by the Division for purpose of meeting the Regulation 85 nutrient monitoring requirements. The definition also clarifies that some method modifications are not ATPs, consistent with Methods Update Rule which was promulgated by EPA in March 2007.

2. Analyte means a substance that is of interest in an analytical procedure.

   This term was introduced and defined by the Division as part of the development of the 2014 Policy. The term expresses the concept of a substance within an analytical context. Other notable expressions of the concept of a substance include parameter, which is defined in the basic standards for surface water and groundwater, and pollutant, which is defined in the discharge permit system regulations.

3. Applicable water quality criterion (AWQC) is the quantitation target level or goal. The AWQC may be one of the following:

   Where an effluent limit has been established,
   i. the AWQC is the effluent limit.

   Where an effluent limit has not been established, the AWQC may be
   ii. an applicable technology based effluent limit (TBEL) or
   iii. half of a water quality standard, or
   iv. half of a water quality standard as assessed in the receiving water, or potential WQBEL, or
   v. half of a potential antidegradation based effluent limitation, which can be an antidegradation based average concentration or a potential non-impact limit.

   The term "applicable water quality criterion" was adopted from EPA's final sufficiently sensitive test methods rule (EPA 2014). The AWQC categories identified in items i. through v. in this definition are based on Division permitting practices. The Division has had a practice of allowing dilution considerations in establishing an AWQC for permit requirements, which the Division intentionally continued in this definition. The Division also included antidegradation levels as potential AWQCs, since determinations associated with these requirements often require the availability of valid results associated with more sensitive test procedures. The Division also included "half of" as a target for water quality based requirements, since "half of" is used in reasonable potential analyses.

The AWQC may be established in a variety of Clean Water Act framework documents, including permit applications, permits or accompanying documents, notices of authorization, and control regulations or accompanying guidance documents.

4. EPA-approved method or EPA-approved analytical method means an analytical method that is approved by EPA pursuant to 40 CFR Part 136.

   This term was originally defined in the 2008 Guidance and the definition was not revised for the 2014 Policy.

5. Method Detection Limit (MDL) means the minimum concentration of an analyte (substance) that can be measured and reported with a 99% confidence that the analyte concentration is greater than zero as determined by the procedure set forth at appendix B of 40 CFR Part 136.

   This term was originally defined in the 2008 Guidance and the definition was not revised for the 2014 Policy. The definition is the same as the regulatory definition in 40 CFR Part 136 Appendix B. EPA often publishes typical MDLs with the published methods. However these serve as guides for a laboratory and laboratory specific MDLs are typically dependent on instrumentation and operating conditions of a particular laboratory.

6. Minimum level (ML) means the lowest concentration of an analyte that can be accurately and precisely quantified using a given method, as determined by the laboratory.

   The term was adopted from EPA's final sufficiently sensitive test methods rule (EPA 2014). The Division found that a consistent term was appropriate for use across the Clean Water Program. This term replaces terms formerly used including "minimum reporting limit," "reporting limit" and "actual PQL achieved by the laboratory" which the Division considers to be synonymous with the term ML. As discussed in EPA's rule, the ML may be obtained in several ways: they may be published in a method; they may be sample concentrations equivalent to the lowest acceptable calibration point used by a laboratory, or they may be calculated by multiplying the MDL in a method, or an MDL determined by a laboratory, by a factor. The factor is typically intended to account for interferences such as those caused by the sample matrix. The ML is laboratory specific.

7. Practical Quantitation Limit (PQL) means the minimum concentration of an analyte (substance) that can be measured with a high degree of confidence that the analyte is present at or above that concentration.

   The PQLs in this policy are established by the Division and any site specific PQL in a permit is also established by the Division. The definition is the same as the regulatory definition in Regulation 61 section 61.2(78). This term was originally included in the 2008 Guidance and the definition was not revised for the 2014 Policy.

8. PQL Robust means the PQL of a substance that was calculated based on lab surveys of robust methods.
   Robust methods are those methods that determine multiple analytes (e.g. EPA Method 624).

This term was originally defined in the 2008 Guidance and minor revisions were made to the definition for the 2014 Policy. The term was developed to reflect the use of gas chromatography (GC) methods available for organic compounds. This term was not used in the development of PQLs published in the 2014 Policy.

9. PQL Minimum means the minimum PQL that was calculated based on lab surveys of non-robust methods.

   This term was originally defined in the 2008 Guidance and minor revisions were made to the definition for the 2014 Policy. This term was not used in the development of PQLs published in the 2014 PQL Policy.

10. Sufficiently sensitive test procedures.

    i. an analytical method is ''sufficiently sensitive'' when the method detects and accurately and precisely quantifies the amount of the analyte. In other words there is a valid positive result, or
    ii. an analytical method is "sufficiently sensitive" when the method accurately and precisely quantifies the result to the AWQC, as demonstrated by the ML is less than or equal to the AWQC. In other words, the level of precision is adequate to inform decision making, or
    iii. an analytical method is "sufficiently sensitive" when the method achieves the required level of accuracy and precision, as demonstrated by the ML is less than or equal to the PQL. In other words, the most sensitive method is being used and properly followed.

    This term was defined by the Division as part of the development of the 2014 Policy. The Division developed this term to clarify in which situations methods are deemed sufficiently sensitive, and in which situations a PQL must be achieved. The language of this definition was modeled after the definition included in EPA's draft sufficiently sensitive test procedures rule (EPA 2010) and is consistent with the definition included in EPA's final sufficiently sensitive test procedures rule (EPA 2014).

Diagrams illustrating the three situations for sufficiently sensitive test procedures follow below:

i.

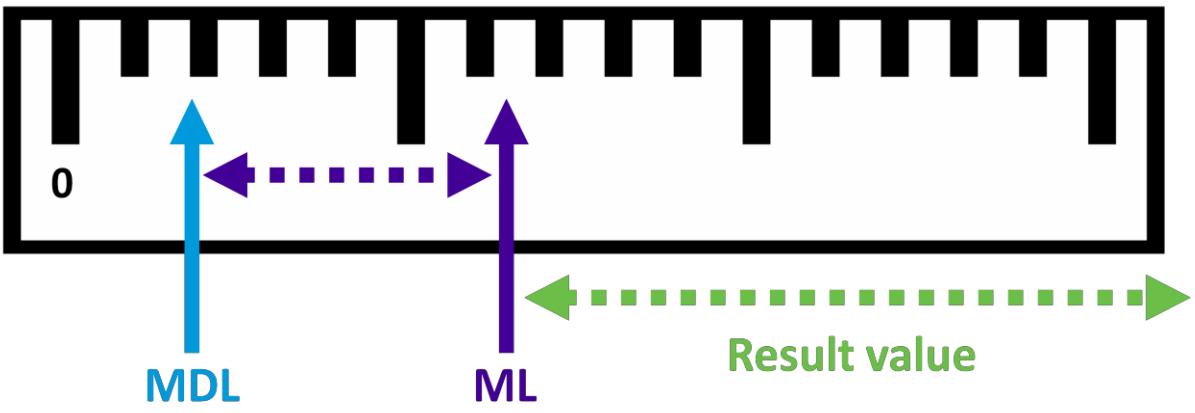

ii.

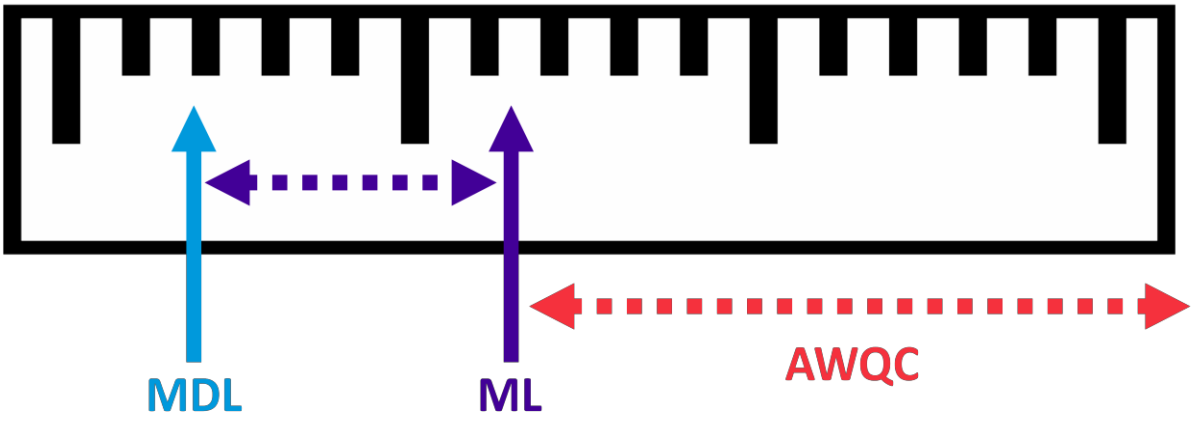

iii.

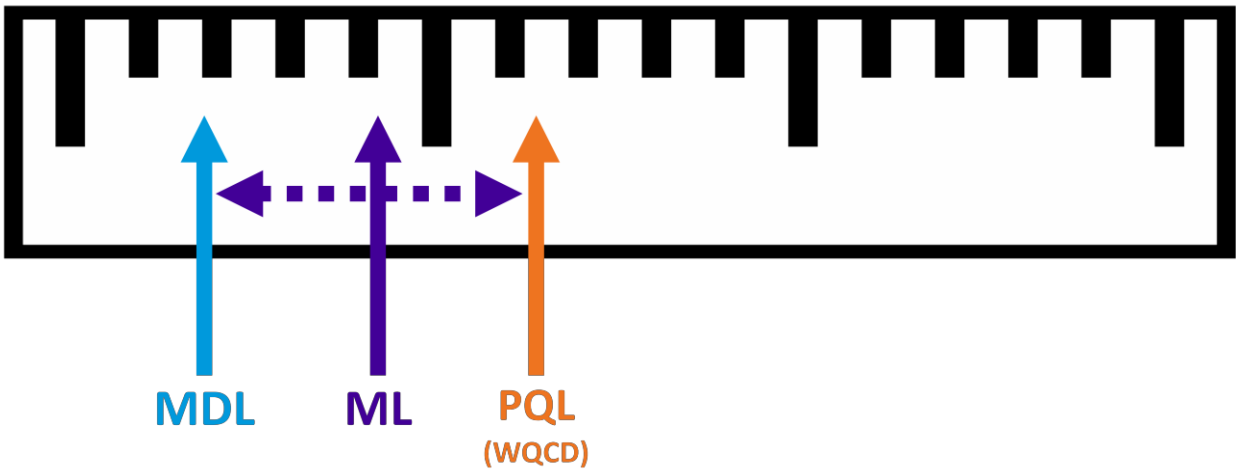

PQL Regulatory and Policy Background

The concept of using PQLs was introduced into the Clean Water Program as part of the adoption of interim organic standards in 1989. A key decision at the time was that PQLs would be used as a compliance threshold whenever the current detection level for a parameter was higher (less stringent) than an effluent limit. As part of the 1989 rulemaking hearing detection methods were adopted into Regulation 31, and the detection levels were based on the Department Laboratory's best judgment for GC/MS, unless noted as based on GC. In 1991, the regulation was revised to clarify that the required levels previously referred to as detection levels were now PQLs. Also, it was noted in the statement of basis and purpose language that PQLs for all parameters in Table III (metal substances) were not necessary since the issue of standards being set at a level below routine detection levels was only an issue with respect to mercury and silver. In 1994 the PQLs for organic parameters were moved from Regulation 31 to Regulation 61.

In 1994 the concept of matrix interference was addressed through rulemaking. A provision was added to Regulation 61 that allowed the Division to develop site specific or discharge specific PQLs. The need for routine review of PQLs was also noted, and the establishment of a committee to

review PQLs was recommended. In January 2003, PQLs were removed from Regulation 61 and section 61.8(2)(m) was modified to include a provision that requires, in the absence of a site specific or discharge specific PQL, the Division to use the PQLs listed in a PQL guidance document. This change was made in order to afford the Division and stakeholders more flexibility in updating PQLs and/or adding new PQLs without the necessity of submitting them to the Water Quality Control Commission (the "Commission") for review and subsequent consideration at a rulemaking hearing. It was also noted in January 2003 that the Division had been unable to review the PQLs listed in regulation or form a committee as directed in 1994 due to focus on permit backlog reduction.

The first PQL guidance document, the 2008 Guidance, described the process used for PQL selection and included PQLs for organic parameters which were intended to update and replace the PQLs for organic parameters that had been formerly included in Regulation 31 and Regulation 61. This current document, Pratical Quantitation Limits Implementation Policy Number CW 6 (the "2014 Policy") is the first revision and reissuance of the 2008 Guidance. The 2014 Policy was developed in accordance with Division Policy 1, which led to the renaming of the document from "Guidance" to "Policy" and defined the numbering and formatting structure of the document. The 2014 Policy is focused on developing PQLs for non organic parameters, including inorganics, metals, radiological parameters, and nutrients.

The 2014 Policy was public noticed in draft form through the Division's Water Quality Bulletin from July 3, 2014 through August 1, 2014. No public comments were received on the draft 2014 Policy. On August 19, 2014, EPA issued the final sufficiently sensitive test methods rule (EPA 2014) and the Division made minor changes to the 2014 Policy to reflect the fact that the rule is finalized and that the Division considers the content of the 2014 Policy consistent with the requirements in EPA's rule. The Division adopted EPA's terms AWQC and ML for the final policy, rather than move forward with terms that had been developed for the draft policy, since the terms are considered synonymous.

PQL Implementation Background:

Regulation 61, sections 61.4 and 61.8(4)(j) of the Colorado Discharge Permit System (CDPS) regulations require permit applicants and permittees to collect and analyze samples using and adhering to EPA approved methods. For the purpose of permit applications, where a method for a particular parameter has not been approved by EPA, applicants may use any suitable method, but must provide a description of the method. For the purpose of compliance with permit conditions, where a method for a particular parameter has not been approved by EPA, the method used must be approved by the Division. It is important to emphasize that, for CDPS permitting purposes, there is no option to using an EPA approved method or, where there is no EPA approved method, a Division approved method, even if a non-approved method is more precise, accurate, exhibits a lower PQL, and/or considers interferences present in effluent.

EPA approved methods typically define how the method detection limit (MDL) is determined and publish MDLs that have been achieved by some laboratories, for reference purposes. In at least one case (EPA Method 1631), a PQL requirement is included in the published method, and in that case adherence to the PQL is required commensurate with the requirement to adhere to the published method. Some NPDES authorities (EPA or delegated state) develop PQLs or an equivalent measure often associated with different terminology, such as quantitation limit, quantification level, or minimum level.

In Colorado, prior to the introduction of the concept of PQLs in Regulation 31, the Division routinely specified in permits, a method to be used and corresponding detection level for total residual chlorine, since available analytical methods were not sensitive enough to measure to the level of the water quality standard. Over time detection levels were specified in permits for more parameters, particularly inorganics and metals, and they were expressed as PQLs, instead of as MDLs. At some point, the Division listed PQL values as effluent limits in accordance with direction provided in Regulation 31 section 31.14(9), in an attempt to provide clarity that the PQL would be used as the compliance threshold in cases where the PQL was higher (less stringent) than the effluent limit. EPA opposed the practice on the basis that it was inconsistent with the permit regulations and that effluent limits had to be an expressed as a derivation of a water quality standard. The practice was subsequently discontinued.

The Division has continued to include PQLs in permits, particularly for non organic parameters. Since 2009, the Division has also included more detailed instructions in permits regarding reporting, to ensure that violations would not be generated in situations where a PQL is greater than an effluent limit. This continues the practice of using the PQL as the compliance threshold.

The Division has not routinely specified PQL requirements in permit applications or notices of intent applications, or in pretreatment permits, biosolids notices of authorizations, or reclaimed water notices of authorization. Regulation 85 section 85.6(4)(c) requires that the analytical method for all effluent monitoring conducted in accordance with the regulation be capable of reporting results at or below the practical quantitation limit (PQL), as required by Regulation 61. The PQLs for nutrients included in permits have been provided as those required by Regulation 61.

Purpose and Applicability of this Policy:

This policy establishes PQLs that are to be used by the Division in establishing PQL requirements within the Clean Water Program, including but not limited to permit applications, notices of intent applications, discharge permits, pretreatment permits, biosolids notices of authorizations, reclaimed water notices of authorization, and Regulation 85 implementation requirements.

Under certain circumstances, the PQLs established in this policy apply to regulated activities outside of the Division. Pursuant to C.R.S. 25-8-202(7), the Commission and the Division recognize water quality responsibilities of the following state agencies, referred to as the implementing agencies: The Division of Reclamation, Mining, and Safety; the State Engineer; the Oil and Gas Conservation Commission; and the state agency responsible for activities related to the federal Resource Conservation and Recovery Act of 1976, as amended, and related state programs (e.g. the solid waste program under the Hazardous Materials and Waste Management Division and the underground storage tank program implemented by the Division of Oil and Public Safety of the Department of Labor & Employment). The Commission is solely responsible for assigning beneficial uses to, and adoption of appropriate water quality standards for, state waters that may be affected by activities subject to the jurisdiction of the implementing agencies. Such classifications and standards are to be implemented by the implementing agencies, after consultation with the Division and the Commission, through their own programs. The Division is solely responsible for the issuance and enforcement of permits authorizing point source discharges to surface waters of the state, regardless of whether the activity resulting in the discharge is undertaken by an entity otherwise subject to regulation by an implementing agency.

With respect to requirements for PQLs to be used under an implementing agency's program, Regulation 41 section 41.5(C)(4) states:

> "Whenever the practical quantitation limit, or PQL, for a pollutant is higher (less stringent) than a standard listed in subsection 2 or 3 above, the PQL shall be used in regulating specific activities. These PQL's shall be approved by the Water Quality Control Division unless an alternate PQL has been established by the applicable implementing agency."

As such, implementing agencies are bound to use the PQLs listed in this Policy unless they have established an alternate PQL. For activities regulated by an implementing agency, it is recommended that the regulated entity contact the implementing agency to determine if an alternate PQL has been adopted.

Policy Statement:

This policy establishes PQLs that are to be used by the Division in establishing PQL requirements within the Clean Water Program. These PQLs are also to be used by implementing agencies, unless an alternate PQL has been established by the implementing agency.

PQL Non-Survey Based Development Process and Established PQLs

In cases where PQLs have not been developed using a survey based process, the Division will use the most current PQL as developed by the Colorado Department of Public Health and Environment's (the "Department") laboratory as the PQL. The Department laboratory is a commercially available laboratory and the Division intends to continue to use this process until a PQL can be developed using a survey based process. The Division has not included a standard multiplier to be used in the future for establishing PQLs, based on MDLs reported by the Department laboratory, since the determination of the appropriate multiplier is best made at the time a PQL is being developed. This allows consideration of factors appropriate for the situation, such as the nature of the parameter, it's expected level of presence throughout the state (e.g., only in unique circumstances versus relatively ubiquitous across the state), the availability of published methods, the characteristics of the sample matrix, the type of analytical equipment used, and the type and level of decision making that needs to be informed. This is approach is consistent with the approach previously used by the Division, as described previously in Division policy WQP No. 19, issued in September 1993, and in Regulation 31 and Regulation 61.

As of the effective date of publication of the 2014 Policy, the Division does not have any PQLs established that were developed using a non survey based process. PQLs were previously established using a non-survey based process for organics (the PQLs included in Regulation 31 and Regulation 61 prior to the adoption of the 2008 Guidance), and for metals, inorganics, nutrients, radiological parameters, and nonylphenol (PQLs included in permits prior to the adoption of the 2014 Policy). It is anticipated that in the future if PQLs are established using a non survey based process for statewide use, those PQLs would be included in this policy document through an update or modification process, and that the specific method for the process update would be determined at that time in accordance with Division Policy 1, or if superseded guidelines in place at that time.

2012-14 Survey Based PQL Development Process and Established PQLs

In the period after the initial adoption of the 2008 Guidance the anticipated effort to develop PQLs for inorganic parameters and metals did not materialize. In the meantime, the Division updated and established PQLs for metals, inorganics, nutrients, radiological parameters, and nonylphenol based on the PQLs achieved by the CDPHE laboratory in accordance with Division policy WQP No. 19, issued in September 1993. In the fall of 2012 a new Colorado Water Quality Forum PQL work group was formed to complete the development of statewide PQLs for nutrients, and this effort was then expanded to include inorganics, metals radiological parameters, and nonylphenol. Division staff did not participate in the PQL work group due to competing demands for staff time, and consensus was reached that the work group should proceed to conduct a lab survey, and then coordinate with Division staff regarding the use of survey results to develop PQLs.

The 2014 PQLs were established based on a survey of municipal and commercial laboratories around the state. Detailed information generated during the survey process is available in a spreadsheet titled "Development Table for Non-Organics" which is incorporated into this policy by reference and available on the Division's web site. Members of the PQL work group initially evaluated the survey results following the "Process for PQL Selection" section of the 2008 Guidance. The PQL work group survey process is detailed below:

1. The initial PQL work group lab survey was conducted in late 2012 and included nutrient parameters (ammonia, nitrate, nitrite, phosphorus and Total Kjeldahl Nitrogen (TKN)). These parameters were of particular interest to the stakeholders in light of the nitrogen and phosphorus MDLs that were incorporated in the Commission's Regulation 85 which requires ambient monitoring for nutrients. Regulation 85 also referenced Regulation 61 in regard to the use of PQLs for reporting effluent sampling results. A second lab survey was conducted in early 2013 and included the rest of the parameters the Division routinely includes in discharge permits (metals, inorganics, radiochemistry and nonylphenol).
2. The lab surveys were conducted by parameter and included both robust methods (ICP/MS, ICP, and IC) and non robust methods. If the calculated PQL was not equal to or lower than the lowest water quality standard the work group used only the data from the most sensitive method to determine the PQL. This was a departure from the procedure used to establish PQLs for organics in 2008 where results were first evaluated for "robust" methods, and "PQL minimums" were only established in cases where a "robust" method could not achieve a PQL at or below the level of the lowest water quality standard for that parameter. This more streamlined approach allowed PQLs to be established more quickly and was determined to be an appropriate deviation from the procedure developed specifically for organic parameters.
3. The results of both surveys were combined and the data was reviewed and evaluated using the procedures
established in the 2008 Guidance. An outlier test was conducted. After any outliers were eliminated, the median of the remaining detection limits from the laboratories was calculated. Similar to the procedure used in development of the 2008 PQLs, this process recognizes that a small number of laboratories may have to improve their performance in order to achieve MLs less than or equal to the PQLs established in 2014. A factor of 10 was initially applied to the median of the remaining detection limits to determine draft PQLs.
4. Work group members and Division staff then coordinated regarding further use of the survey results. Division staff identified parameters where the resulting PQL was not low

enough to meet the needs for decision making (i.e., the AWQC). For example, there were situations identified where a lower PQL would provide quantifiable numeric results, rather than "less than the ML", for use in reasonable potential determinations for potential limits near the water quality standard or at an antidegradation-based level. The Division and the Work Group evaluated these situations and determined that in most of them a significant majority (or all) of the laboratories that had submitted data for the survey were achieving an ML at the desired level. In these cases (hexavalent chromium, iron, selenium, cyanide and phosphorus) the PQL was set at a value lower than the median of the lab MDLs multiplied by ten.

5. All final PQLs are intended to be used for all forms of a parameter. For example total recoverable, total, potentially dissolved, and dissolved for inorganics. For cyanide, a decision was made to establish one PQL for use for the free, WAD, and total forms.

In light of the lowering of PQLs for the parameters identified above, it is appropriate to specifically provide for using an MDL multiplier lower than 10 where a significant majority of the surveyed laboratories have MLs at or lower than the desired level. In the case of the above parameters a multiplier of five was used to determine the chosen value. The 18th through 21st editions of Standard Methods for the Examination of Water and Wastewater provide for MLs to be calculated based on a multiplying the MDL by a factor of five. This is an appropriate value to use as a lower bound for determining PQLs as the use of lower factors would likely result in a value that is below the ML for a majority of the laboratories.

2004-2008 SURVEY-BASED PQL DEVELOPMENT PROCESS AND ESTABLISHED PQLS

Background

In 2004, the Division established a PQL Work Group (Work Group) to obtain stakeholder input to the development of the guidance document that included a variety of participants (i.e., citizens, attorneys, staff of municipal dischargers, chemists from commercial and municipal analytical laboratories, staff of industrial dischargers, consultants, and staff from the Hazardous Materials and Waste Management Division). The primary tasks of the Work Group were to:

- Identify PQLs for organic chemicals, including those that were previously listed in Regulation 61 as well as other compounds for which the WQCC has adopted standards, and
- Develop a methodology for determining statewide PQLs where none are listed or established as site specific PQLs.

The initial group identified that the value of PQL guidance could extend to other implementing agencies and the scope was expanded to waters other than effluents. In response to this change, the work group was re-organized and moved under the auspices of the Colorado Water Quality Forum.

Issues identified by the work group and addressed in the 2008 Guidance include:

- As the sources of information on PQLs were examined, it was evident that many factors need consideration before selecting a PQL for a method used in determining compliance with effluent limits. Factors included: matrix interferences, process for defining PQLs based on detection limits, PQLs attainable at commercial laboratories, and extent of deviation from the methodology in EPA- approved methods.

Consequently, additional efforts were needed by the technical subcommittee of the work group to examine the available data on methodology and PQLs.

- Commercial and business interests emphasized their concerns that the development of new and lower PQLs could place a major economic burden on small businesses with discharge permits. The increased cost was portrayed in several ways, including: more expensive analyses are required to achieve lower detection limits and past practices of having many chemicals analyzed with a single robust method will be replaced with need to conduct separate tests on some of these chemicals where a PQL obtained by the robust test would be above the water quality standard. Under the latter, additional costs would result from the additional separate tests and from having to perform

  additional steps in sample collection and transport. As a result, additional efforts were undertaken to explore options for maintaining the use of robust methods.
- Participating chemists identified analytical method "drift" as a concern. There have been many
  changes in analytical techniques due to advances since many EPA-approved methods were established in the 1970 to 1990 period. An issue raised was: How much change is acceptable before the modified method is no longer equivalent to the EPA-approved method? To address this issue, discussions were initiated with EPA concerning their Alternative Test Procedure (ATP) Program and related decisions on method "drift." This discussion identified the need to inventory ATP decisions that are available to dischargers in Colorado.
- The Hazardous Materials and Waste Management Division emphasized the need for the guidance document to maintain clarity on use of EPA-approved and performance-based Measurement System (PBMS) methods in referring to PQLs. The latter may be the preferred option when an EPA-approved method is not available for analyzing a parameter that would be regulated under a CDPS permit.

The 2008 Guidance represented the product of the work group's efforts and draft versions were presented to all interested parties for review and comment prior to an informational hearing before the Commission in October of 2006. Since that time, the work group discovered that many of the methods upon which the PQLs in the October 2006 draft were based are not being utilized by Colorado commercial laboratories. This led the group to re-analyze the PQLs for these compounds.

Process Used for 2008 PQL Development

1. A decision sequence, to describe how a PQL is selected, was developed for the 2008 document with recognition of the requirements of Regulation 61 and the preference to select a PQL associated with a robust method, where such PQL would allow quantitation at or below the compliance threshold (limit). Figures 1 and 2 present this sequence.
2. When using data from the laboratory survey, an outlier test was conducted. After any outliers were
   eliminated, the median of the remaining detection limits from the laboratories was used and was referred to as "the qualified detection limit" in Figures 1 and 2. The qualified detection limit was used with the recognition that a small number of laboratories may have to improve their performance in order to achieve the required PQL.
3. When there was an EPA-approved analytical method for a compound, yet no laboratories from the survey reported a detection limit for that method, the laboratories were

contacted to determine if they were running the method but had not provided a detection limit. In those cases where none of the laboratories contacted was running the method, the method was considered to be "not commercially available."

4. The statewide PQL Robust and statewide PQL Minimum were derived by multiplying the statistically derived MDL by a factor of 10. The factor of 10 was selected because of the large number of organic compounds being evaluated (using a variety of multipliers would result in more detailed analysis) and because it was determined to be consistent with the site-specific procedure. That value was then rounded based on the number of significant figures. Where there was one significant figure, the PQL was rounded up to the nearest 1, 2, 5, or 10 (or multiple of 10 of those values), in accordance with standard methodology. Where there were two significant figures (maximum), the second digit in the PQL was rounded up to the nearest 5 or 10. In a very few cases, the work group rounded down slightly to establish the PQL (e.g., 5.1 to 5) where this would allow the PQL to be at our below the water quality standard. This was deemed appropriate given the use of the detection limit multiplier of 10.

The Division established PQLs for robust methods in order to provide information that entities regulated by the Division and/or an implementing agency can use to make decisions as to whether a robust method can detect to the level necessary to determine compliance with an effluent limit or a water quality standard. Where the PQL associated with a robust method cannot detect the pollutant of concern at the required level, the analytical method chosen must achieve a PQL at or less than the PQL Minimum. Where the regulated entity can demonstrate with appropriate quality assurance that their laboratory can achieve the PQL Minimum using another method, which could be a robust method, the use of such method is acceptable.

As noted in Figure 1, the Division used the information from the initial survey (2005) of qualified laboratories in the determination of an acceptable PQL Robust or PQL Minimum. It was anticipated that as new data are developed from additional labs or where existing labs improve their ability to detect compounds at lower concentrations, this step could be repeated by the Division with the possible outcome of determining modifications to the PQL Robust or PQL Minimum.

Where there was no EPA or Division approved method for an analyte, a similar process, shown in Figure 2, was used to determine appropriate PQLs. In this case, these values, listed in Table 2 as PQLNN Robust and PQLNN Minimum, were not portrayed as PQLs for statewide use. They were intended to provide guidance to the Division in determining appropriate quantitation levels for these analytes in CDPS discharge permits. Other implementing agencies are free to use these values or select others as they see fit. There is an exception for diisopropylmethylphosphonate (DIMP). At an October 4, 1993 rulemaking hearing, the Commission established a statewide water-quality standard for DIMP of 8 ug/L and also set a PQL for DIMP at 1.0 ug/l. An analytical method was not specifically identified.

PQLs established in 2008 are shown on Table 2. Detailed information generated during the survey process is available in a spreadsheet titled "Development Table for Organics" which is incorporated into this policy by reference and available on the Division's web site.

Figure 1. 2008 PQL Development Process Decision Sequence For Organic Compounds With an Approved Commercially Available NPDES Method (Steps 1 through 25)

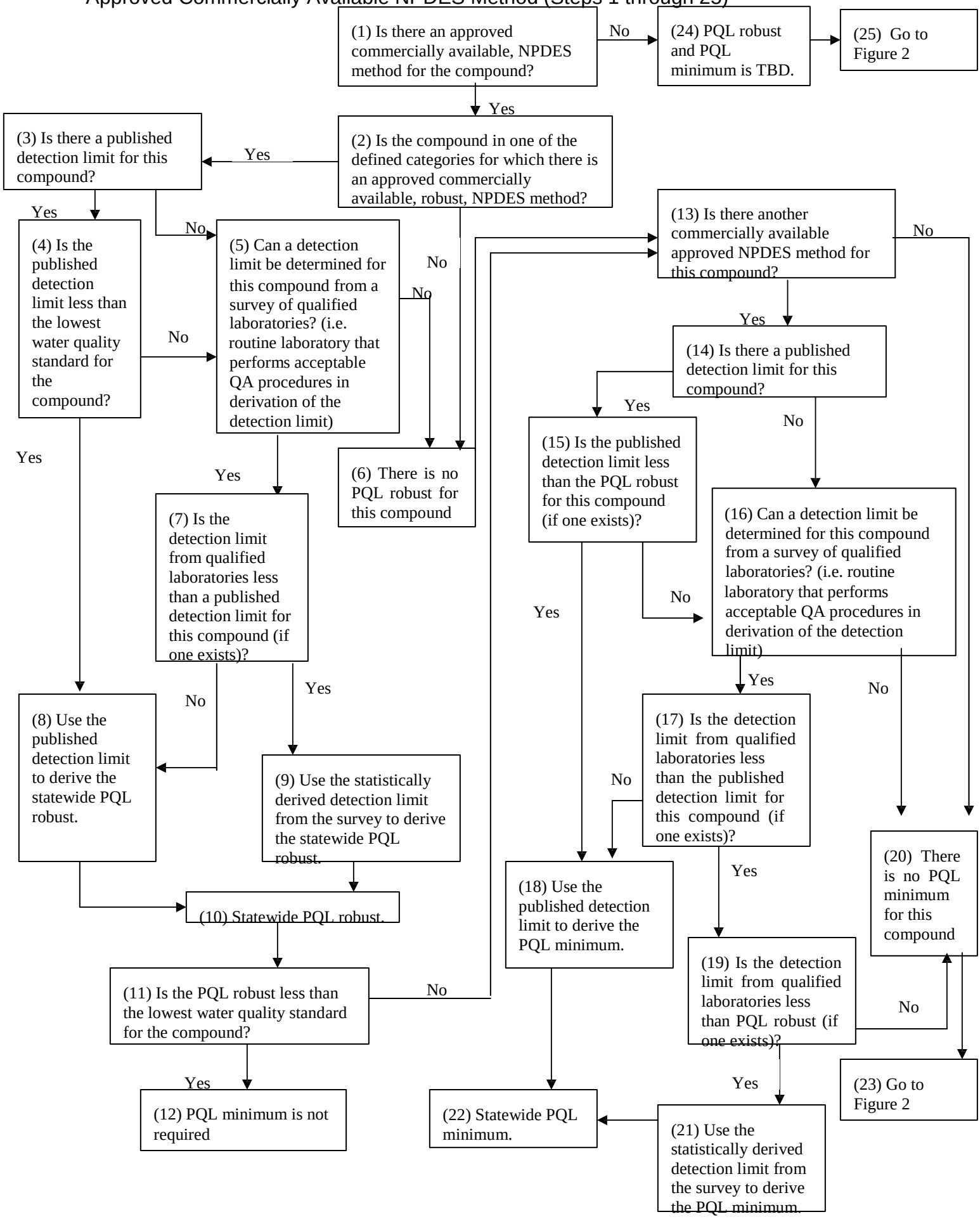

Figure 2. 2008 PQL Development Process Decision Sequence For Organic Compounds With No EPA/WQCD Approved Commercially Available Analytical Method (Steps 26 through 47)

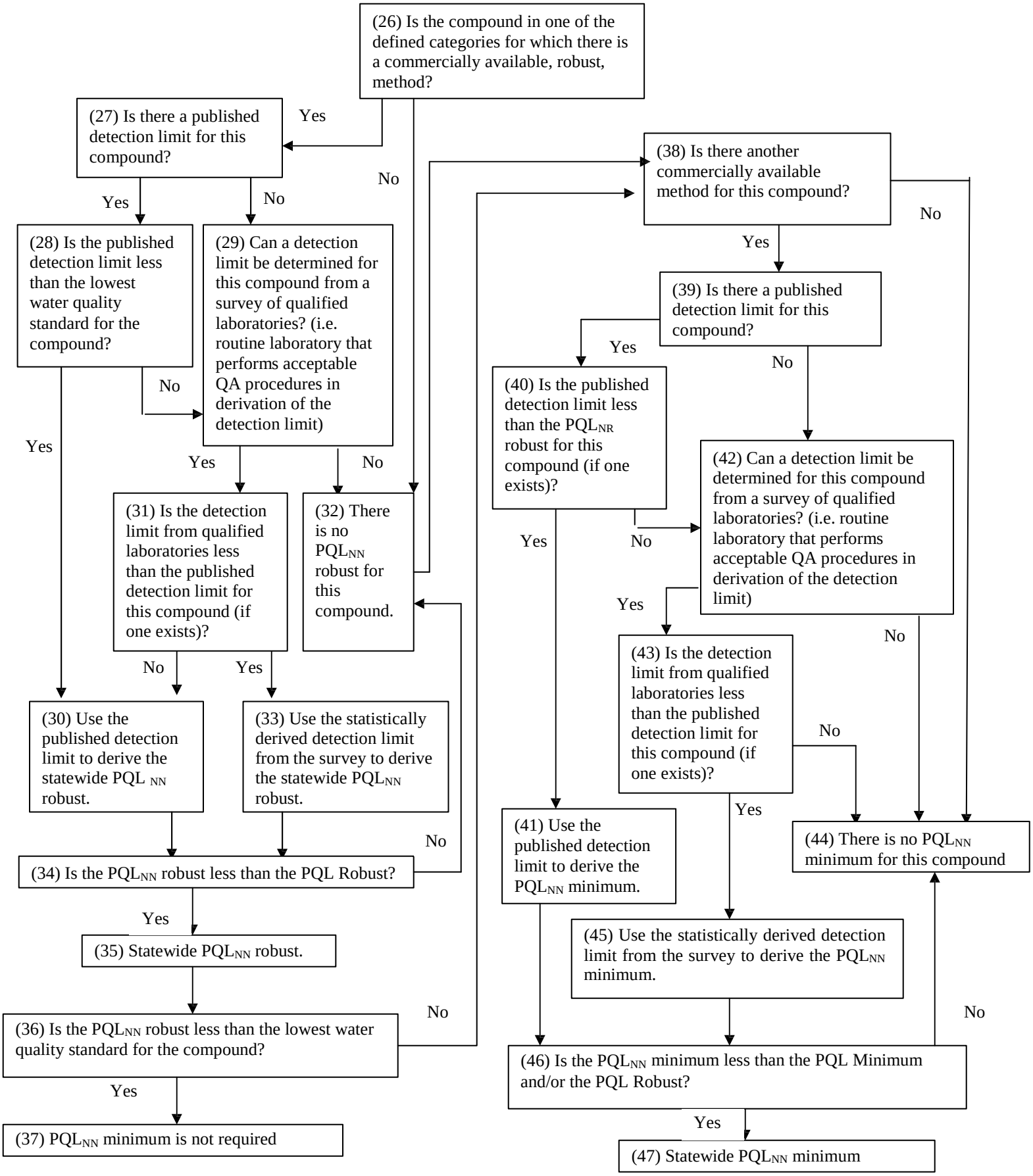

NN = Non-NPDES/WQCD approved method

APPENDIX A

A Division policy (WQP No. 19), issued in September 1993, provided a means for a permittee to establish a site-specific or a discharge-specific PQL. The process included in this Appendix was developed for the publication of the 2008 Guidance. It was not reviewed or revised in substance for development of the 2014 Policy. Minor editorial changes were made and reference to use of this method to establish statewide PQLs was removed.

DEVELOPMENT OF A DISCHARGE/SITE SPECIFIC PQL

Purpose:

Some sample matrices contain chemicals that can interfere with analytical procedures near the level of detection. To identify the levels at which a chemical in an environmental matrix (e.g., surface water, groundwater, or wastewater discharge) can accurately be measured, it may be necessary to establish a site specific PQL. The PQL will then represent the level at which values can be reported for that discharge with an acceptable level of confidence. From a regulatory standpoint, it will also be used as the compliance threshold.

The following policy is established to specify a procedure for an applicant to establish a PQL for their specific sample matrix.

Policy/Procedure:

The standard practice of CDPHE will be to use the PQLs listed in this policy as the default for establishing PQL requirements and for use as a compliance threshold. Certain PQLs represent the level of reliable identification and quantitation in a clean water sample and therefore may not provide representative results for other sample matrices. Depending on the chemicals in the water or wastewater matrix, PQLs for different parameters can change between matrices. In those cases where the applicant believes a higher PQL is appropriate for a parameter, the following procedure is established to guide development of a site-specific PQL.

The applicant should communicate with the appropriate CDPHE program staff to review the regulatory limit to determine if a matrix-specific PQL is appropriate. If a PQL or other reporting standard substantially equivalent to a PQL (such as a Method Reporting Limit (MRL)), has already been established and is currently in use pursuant to a quality assurance plan that has been previously approved by the Division or an implementing agency (e.g., by the CDPHE Hazardous Materials and Waste Management Division at a site undergoing corrective action, response action, closure or post-closure activities), the Division may approve the use of such previously established PQL or equivalent. Otherwise, the procedure outlined below should be followed.

Following the applicant-CDPHE program staff communication described above, a recommendation for determining a matrix-specific PQL should be made by the CDPHE program, which may seek technical counsel from the CDPHE Laboratory Services Division or other qualified source. If the applicant opts to proceed with the matrix-specific PQL determination, the applicant should be referred to the CDPHE Laboratory Division to discuss the actual determination.

In situations where significant variability in matrix quality is likely, the PQL determination should be performed on matrix quality that the applicant feels represents their worst-case situation. An MDL established through this process is matrix specific and should not be applied to other matrices.

All tests by all parties should be conducted on the same split sample of the effluent using the same analytical method.

A minimum of three laboratories are recommended to conduct the analyses. It is not necessary for the CDPHE Laboratory to be one of them. If three laboratories cannot be found that employ the same analytical method or the analytical method is not commercially available, contact the appropriate CDPHE program for further guidance.

Seven spiked samples should be prepared by a single party for each lab from an original volume of "matrix" water, which can be the "regulated" water (effluent, ground water, etc.) or a blend of laboratory grade water and the compounds suspected of causing interference preventing detection at the statewide PQL.

Analytical results from the three laboratories should be supplied to the applicable CDPHE Program for review of acceptability and statistical analysis. The CDPHE Program may seek technical council from the CDPHE laboratory or other qualified sources as deemed appropriate. Data from all participating laboratories should be used in developing the PQL unless data from one of the laboratories is determined to be invalid or fails an outlier test.

An MDL is then determined for each target analyte using the procedure detailed at 40 *CFR* Part 136, Appendix B. A pooled MDL is then calculated from the individual laboratory MDLs by comparing the square root of the geometric mean of the squares of the individual MDLs and multiplying the result by a ratio of t-values to adjust for the increased degrees of freedom.

The PQL should be determined by multiplying the pooled MDL by a factor of 10 unless a lower factor is justified based on the relationship of the accuracy of the recovery to the true value of the chemical spiked into the sample, inter and intra laboratory comparability, signal to noise ratios, standard deviations, outlier tests and method robustness. Such determination may be made in consultation with the CDPHE laboratory or other qualified source, as deemed appropriate by the Division. Consideration however, should also be given to the environmental consequences and impacts of the resulting PQL on the regulated entity.

The cost of PQL determinations will be borne by the applicant. Use of a site-specific PQL may be subject to public notice requirements.