Groundwater Protection

Agricultural Chemicals

Plans for Small To Medium-Sized Agricultural Chemical Bulk Storage & Mix/Load Facilities

Approved by the Commissioner of Agriculture to fulfill the requirements of 8 CCR 1206-1

Some figures, tables, and text are reproduced with permission from:

Designing Facilities for Pesticide and Fertilizer Containment
MWPS-37; 1st edition, 1991
©MidWest Plan Service
Ames, Iowa 50011-3080

Pursuant to Parts 6.3 (b) and 16.3 (b) of 8 CCR 1206-1 (1994) for commercial fertilizers and pesticides, I hearby approve the Colorado State University Department of Civil & Environmental Engineering as a source for these design plans.

John T. Salazar
Commissioner of Agriculture

1-28-13
Date

Published by the Colorado Department of Agriculture in cooperation with Colorado State University Extension.

TABLE OF CONTENTS

■ **Overview**.....1

■ **Concrete Facility Design**.....5

■ **Mix/Load Pad Design**.....7

■ **Secondary Containment Design**.....16

■ **Steel Secondary Containment Design**.....25

■ **Secondary Containment Design for 10 ft. Diameter Tanks**.....26

■ **Secondary Containment Design for 7 ft. Diameter Tanks**.....29

■ **Connection Details**.....32

PLANS FOR SMALL TO MEDIUM-SIZED AGRICULTURAL CHEMICAL BULK STORAGE & MIX/LOAD FACILITIES

The Rules governing the storage and mixing/loading of bulk agricultural chemicals (*Water Quality Control Concerning Agricultural Chemicals and Ground Water - 8 CCR 1206-1*) require that bulk storage facility operators construct approved facilities. The design plan for such facilities must either be signed and sealed by a Colorado registered professional engineer or be from a source approved by the Commissioner of Agriculture. The following design plans have been approved for use by the Commissioner of Agriculture.

For concrete, there are two designs presented for liquid agricultural chemical mix/load pads, one design for a dry agricultural chemical mix/load pad and one design for secondary containment. All of these designs are expandable so as to fit the particular size requirements of the operator. The designs are adapted from the Midwest Plan Service booklet entitled *Designing Facilities for Pesticide and Fertilizer Containment (MWPS-37)*.

For steel facilities, there are two design plans for secondary containment.

Several guidelines to simplify the design of these generic plans are incorporated:

■ All secondary containment facilities for bulk agricultural chemicals shall have a mix/load pad.

■ Concrete and asphalt for dry agricultural chemical mix/load pads, are the construction materials. Both are readily available and familiar to construction firms.

■ All designs are developed without a roof covering.

■ Only the design of the secondary containment or mix/load pad is addressed. Other details such as placement of the bulk tanks, plumbing, and design of pesticide storage buildings are omitted.

The design plans cover the following topics:

I. Overall Facility Design
II. Concrete
   IIA. Mix/Load Pad Design
   IIB. Secondary Containment Design
III. Steel Secondary Containment Design
   IIIA. 10 Foot Diameter Tanks
   IIIB. 7 Foot Diameter Tanks
   IIIC. Connection Details

The following plans present design elements required by 8 CCR 1206-1. However, each section, as noted, also has recommended elements. These elements are ideas to improve the performance of the facility. A step-by-step implementation process also is included with the designs.

I. OVERALL FACILITY DESIGN

The following general design elements are required for all facilities:

■ Site location or grading improvements to provide drainage away from the facility.

■ The facility must meet all applicable local building codes and zoning requirements.

■ Stored agricultural chemicals must be secure from unauthorized access.

■ Provide a building to store pesticides for protection from weather and unauthorized access. (**Note:** This meets the requirements of the Colorado Pesticide Applicator's Act.)

■ Concrete in the facility shall maintain impervious character for the life of the structure. This is accomplished through proper site preparation, use of high quality concrete and sealants, proper reinforcement, and crack prevention through proper jointing practices.

■ Pesticides and fertilizers must be stored in separate containment areas.

■ Provide clearance around each bulk storage tank for access and inspection (a 3 foot minimum clearance between tanks, and between tanks and walls is assumed in this design).

■ Equipment to recover discharges is readily available.

■ The water supply line that serves the facility must be protected by a suitable back flow prevention device or method.

The following design elements are recommended for all facilities:

■ For fire protection, locate facility at least 50 feet away from other buildings.

■ Provide a paved (asphalt suggested) apron around the mix/load pad to prevent debris from accumulating on the pad.

■ Provide a personnel safety area which includes an emergency shower/eyewash, spill recovery kit, first-aid kit, clean clothes locker, and storage for personal protection equipment.

■ Locate facility a sufficient distance from a well head to comply with product label requirements.

Groundwater Protection

Agricultural Chemicals

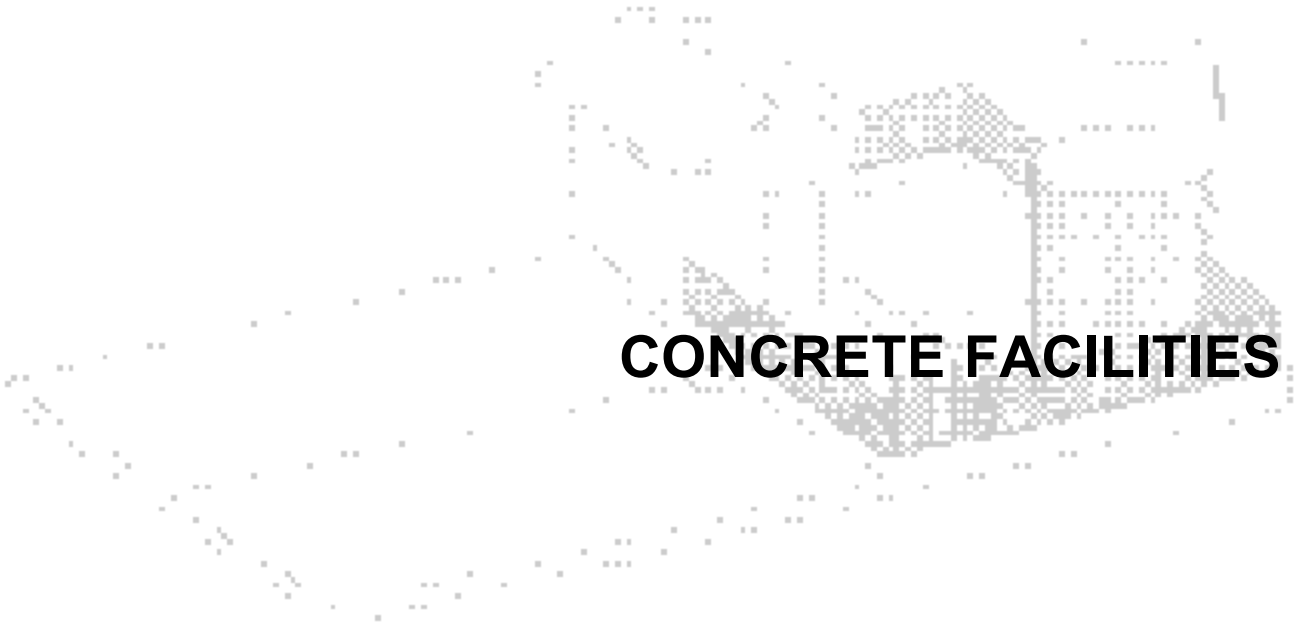

CONCRETE FACILITIES

II. CONCRETE FACILITY DESIGN

Preparation of Subgrade

Proper design and construction of the subgrade is important to assure the concrete successfully carries the design load without deterioration. In preparing the subgrade:

■ Provide proper drainage away from the subgrade.

■ Avoid expansive soils (bentonite clays).

■ Assure uniformity of the subgrade by selective grading, crosshauling, and blending of soils as needed.

■ Compact the subgrade soil to increase its strength.

■ Use a subbase over a non-uniform subgrade. A suitable subbase is a 4-inch thickness of sand, sand/gravel, or crushed stone.

Concrete Specifications

To get the right quality concrete, the order given to the ready mixed concrete supplier must be clear and contain the following information: strength, minimum cement content, maximum size of coarse aggregate, slump, and amount of entrained air. Specifications for concrete mixtures for watertight construction and good surface durability are:

■ Type I or Type II cement with air entrainment (Type IA or IIA) at 4000 - 4500 psi compressive strength. Type II provides moderate sulfate resistance.

■ Water: cement ratio of 0.40 - 0.45 for a stiff (1.5 - 3 inch slump), relatively dry mix for maximum strength, pesticide and fertilizer resistance, freeze/thaw resistance, and watertightness.

■ 5 - 7.5 percent air entrainment in cement to improve workability at placement, and improve watertightness and strength of low slump concrete.

■ Use concrete super plasticizer admixture for easier workability at placement and improved watertightness and strength of low slump concrete.

■ Vibration during placement at 5,000 - 15,000 rpm frequency range for minimum aggregate segregation.

■ Allow no more than 30 minutes between concrete truck loads during placement.

■ Mix 70 - 100 revolutions at mixing speed, then an additional 200 - 230 revolutions (maximum of 300 total revolutions) at agitating speed.

■ Discharge load within 1.5 hours.

■ Minimize discharge drop distance by using a discharge chute.

■ Use large (1 - 1.5 inch), clean, impervious aggregate.

■ Use clean, drinkable mixing water at a pH = 5.0 - 7.0.

■ Oven test aggregate for excess moisture and adjust added water accordingly. If oven testing is not possible, reduce total added water by assuming 3.5 percent excess water in sand and 1.5 percent excess in aggregate.

■ Continuous pour in one day-no cold joints.

■ Use a float finish on the surface with an aluminum or magnesium float to minimize coarse surface texture to improve washing and cleanup. Concrete surfaces to be coated with a sealant may need added grit for a rougher texture to improve sealant adhesion and worker safety.

■ Immersion or moist cure for at least 7 days (28-day immersion or moist cure preferred for maximum strength). The easiest method is to fill structure with water.

■ Allow several weeks for green concrete to cure before applying sealants to minimize trapped moisture bubbles in sealant coating.

■ Seal concrete with an epoxy base coating to protect it from chemical degradation.

Concrete Jointing Practice

Proper jointing practice will assist in minimizing floor cracks and prevent leakage.

Control Joints

Control joints induce concrete to crack along the joint that is sealed to prevent leakage (Figure 1). Control joints are formed by tooling during placement of concrete or sawing after concrete has cured. Control joints should have the following characteristics:

- Spaced no more than 30 feet on centers in both directions.
- Approximately 1/4 inch wide (maximum).
- Depth of 1/4 thickness of the slab.
- Interrupt reinforcing steel at control joint and place 30-inch long No.4 reinforcing bar dowels through the joint every 30 inches along the joint.
- Fill the control joint with an elastomeric sealer.

Construction Joints

Construction joints are to be avoided whenever possible by creating the structure in one continuous pour. If that is not possible, waterstops must be used at construction joints to prevent leakage.

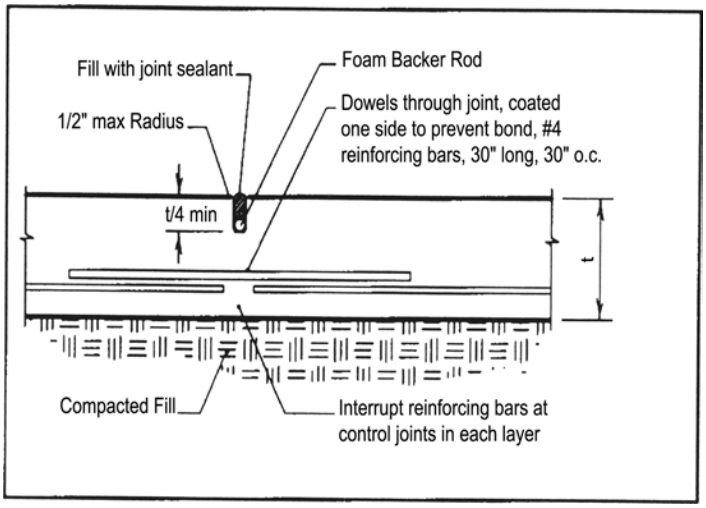

Figure 1. Floor Control Joint.

IIA. MIX/LOAD PAD DESIGN

I. Liquid Agricultural Chemical Mix/Load Pad

There are two mix/load pad designs presented here. The primary difference is the number of sumps and containment areas. With either design, the reinforcing steel requirements, sump design options, and curb design options are the same.

With either design, 8 CCR 1206-1 requires the following design elements:

■ An unroofed pad capable of containing 125 percent of the volume of the largest container served.

■ If the largest container served is more than 1,200 gallons, then the only requirement is to contain 1500 gallons on an unroofed pad.

■ If the primary use of the pad is to handle spray equipment, and bulk transport vehicles are using the pad for only occasional delivery of agricultural chemicals, then pad size is determined as above, provided the bulk transport vehicles conduct their occasional operations with appurtenances over the pad.

■ Pad is made of material constructed to a permeability rate of 10^{-7} cm/sec.

■ No drains or other outlets in the pad.

■ Pad must be capable of handling wheel loads of vehicles served.

■ All liquids on pad must drain to a shallow sump (2 percent slope recommended).

■ Sumps are constructed of materials which resist or can be treated to resist corrosion.

There are recommended elements to consider in developing a mix/load pad design, including:

■ Using a steel sump (stainless steel is preferred).

■ Providing a double sump to separate debris from liquid.

■ Installing a sump dust cover to minimize debris in sump when not in use.

■ Using drip pans under valves and pumps to minimize drips onto concrete.

■ Provide rinsate storage tanks.

Table 1. Single sump concrete pad dimensions and specifications.

	Pad size, ftxft							
Dimension[a]	**25x25**	**30x30**	**30x40**	**40x40**	**40x50**	**50x50**	**50x60**	**60x60**
A,ft	25	30	30	40	40	50	50	60
B,ft	12.5	15	15	20	20	25	25	30
C,ft	25	30	40	40	50	50	60	60
D,ft	12.5	15	20	20	25	25	30	30
E	Concrete slab thickness, see Table 3							
F,in.	7	7	8	8	9	9	9	10
G[b],gal	1,239	2,023	3,098	4,368	6,010	7,710	9,388	12,173

[a]See Figures 4 and 5 for letter designation.
[b]Mixing/Loading Pad Containment Volume.

Use of Mix/Load Plans

To use these generic mix/load pad plans, proceed as follows:

1. Select a plan - either the single sump or double sump pad (see figure 2 or 3).

2. Determine the size of the pad needed by using the following considerations:

(a) Size the pad to accommodate the volume of the largest tank served plus the additional 25 percent as required by 8 CCR 1206-1.

(1) Use Table 1 or 2 to determine capacity and dimensions.

(b) Based on the above calculation, determine if the pad is large enough to:

(1) Accommodate the tank and appurtenances if the boom is not flushed over the pad.

(2) Accommodate the entire spray rig including booms if the boom is flushed over the pad.

(3) Use Table 1 or 2 to determine dimensions.

3. Obtain all pad dimensions and specifications from Table 1 or 2 in each design.

4. Determine concrete thickness and reinforcing bar specifications from Table 3 after axle load of vehicles using the pad is known.

5. Determine type of sump system to use and construct following Figures 5 or 7 and 17 and 18. Fabricate a steel grate to cover the sump.

6. Determine type of curbing to use and construct following Figure 5, 7, or 8.

7. Follow the reinforcing bar detail design of Figure 9 to place steel reinforcing bar.

Table 2. Double sump concrete pad dimensions and specifications.

Dimension[a]	Pad size, ftxft 20x30	30x45	40x60	50x70
A, ft	20	30	40	50
B, ft	10	15	20	20
C, ft	30	45	60	70
D, ft	20	30	40	50
E, ft	10	15	20	25
F, in.	14	17	18	18
G ,in.	11.5	13	13	15
H, in.	14	17	18	21
I[b],in.	0	0	0	0
J, in.	8	11	12	15
K, in.	5.5	7	7	9
L, in.	8	11	12	15
M, in.	12	18	18	18
N, in.	18	30	30	30
P	See Table 3			
Q, %	3.5	3	2.5	2.5
R[c], %	2	2.2	2	2
T1[d], gal	732	2,331	4,440	7,015
T2[e], gal	474	1,520	2,934	5,721

[a]See Figures 6 and 7 for letter designation.
[b]"I" can be increased to provide increased containment volume; if "I" is changed, add the new "I" value to "G", "H", "J", and "K" dimensions.
[c] "R" is the slope of the pad in the rinsate and pesticide storage area.
[d] "T1" is the Pesticide & Rinsate Storage Containment Section Volume.
[e] "T2" is the Mixing/Loading Pad Containment Volume.

Table 3. Mixing/loading pad structural design.

Locate the reinforcing bars for these pads so there is 2" between the top surface of the pad to the top edge of the bars. Do not locate the bars below the midpoint of the slab, Figure 9. Interrupt reinforcing steel at control and construction joints and place 30" long, #4 reinforcing bars, at 30" o.c. along the joints to tie the slabs together. Use 60 grade steel for reinforcing bars and 4,000 psi concrete. Overlap bars at least 12" at splices.

Single axel load,lb	Concrete slab thickness, in.[a]	Reinforcing bars and spacing[b]
Up to 20,000	6	#3 @ 10" o.c.
20,000 to 30,000	8	#4 @ 12" o.c.
30,000 to 40,000	10	#4 @ 10" o.c.

[a]Concrete slab thickness (t) in Figure 8.
[b]Install reinforcing bars at this spacing in both directions.

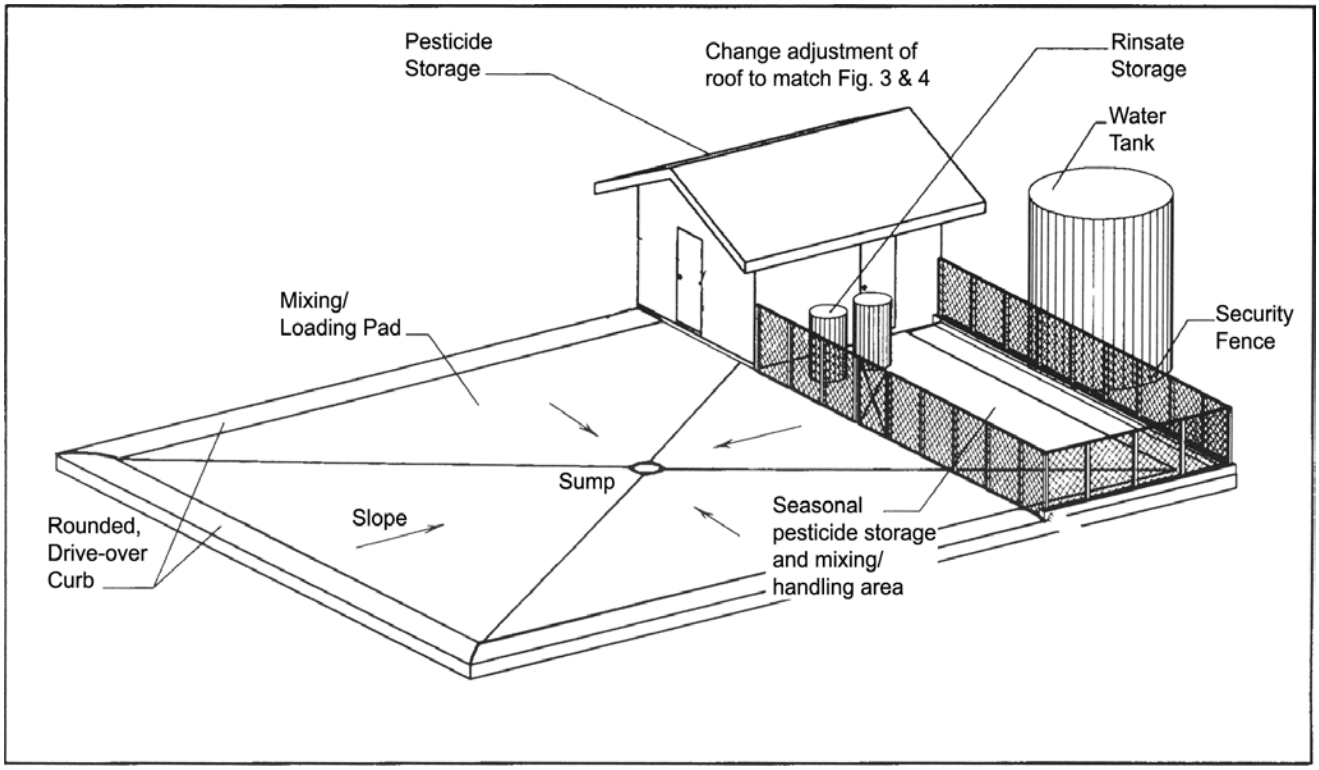

Figure 2. Single sump mix/load pad with pesticide storage. See figs. 4 & 5 for plan view and cross section.

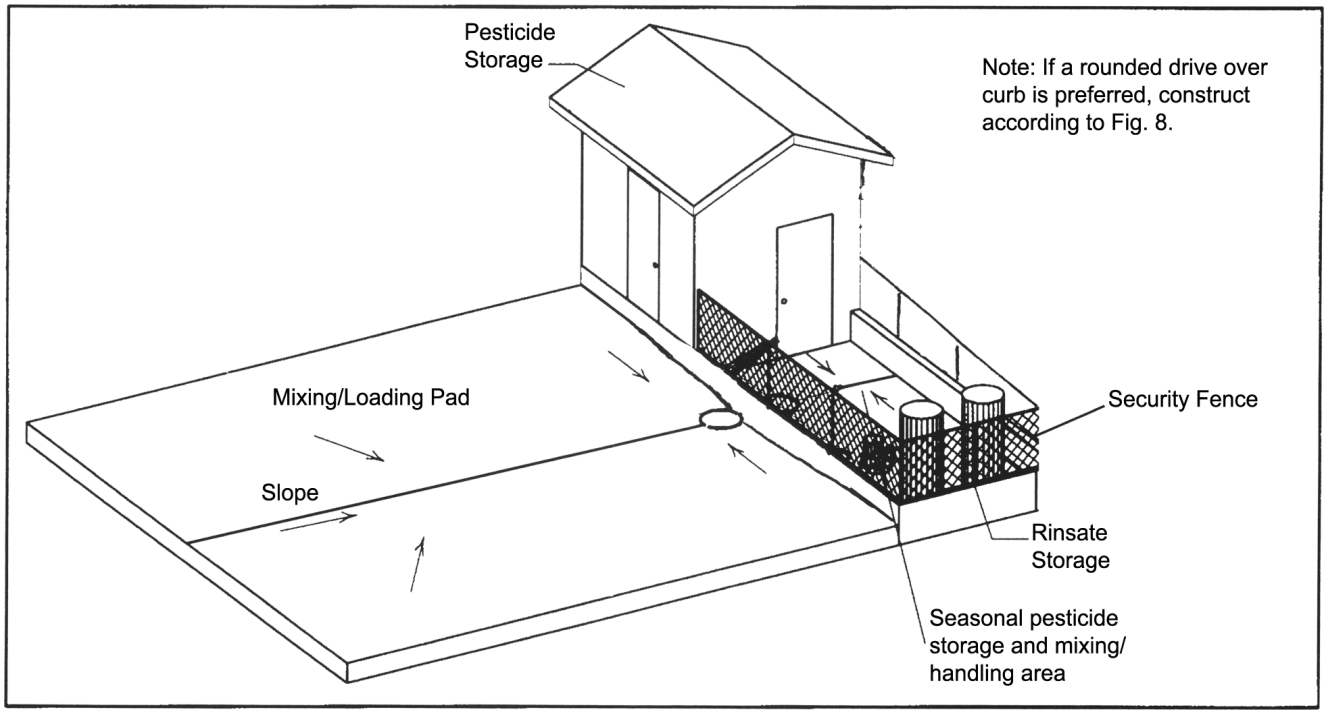

Figure 3. Double sump mix/load pad with pesticide storage. See figs. 6 & 7 for plan view and cross section.

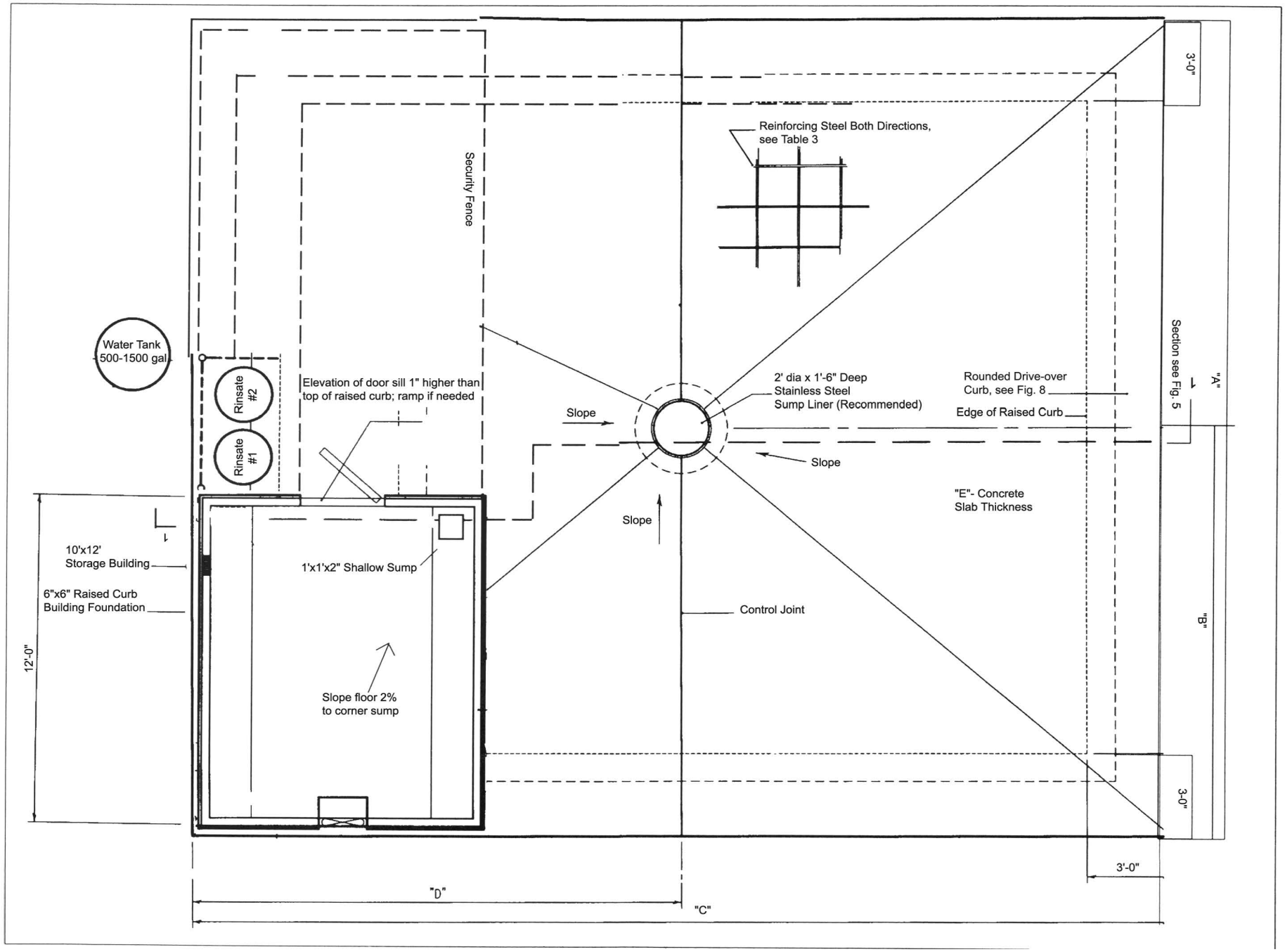

Figure 4. Plan view of single sump mixing/loading pad with pesticide storage. See Table 1 for dimensions.

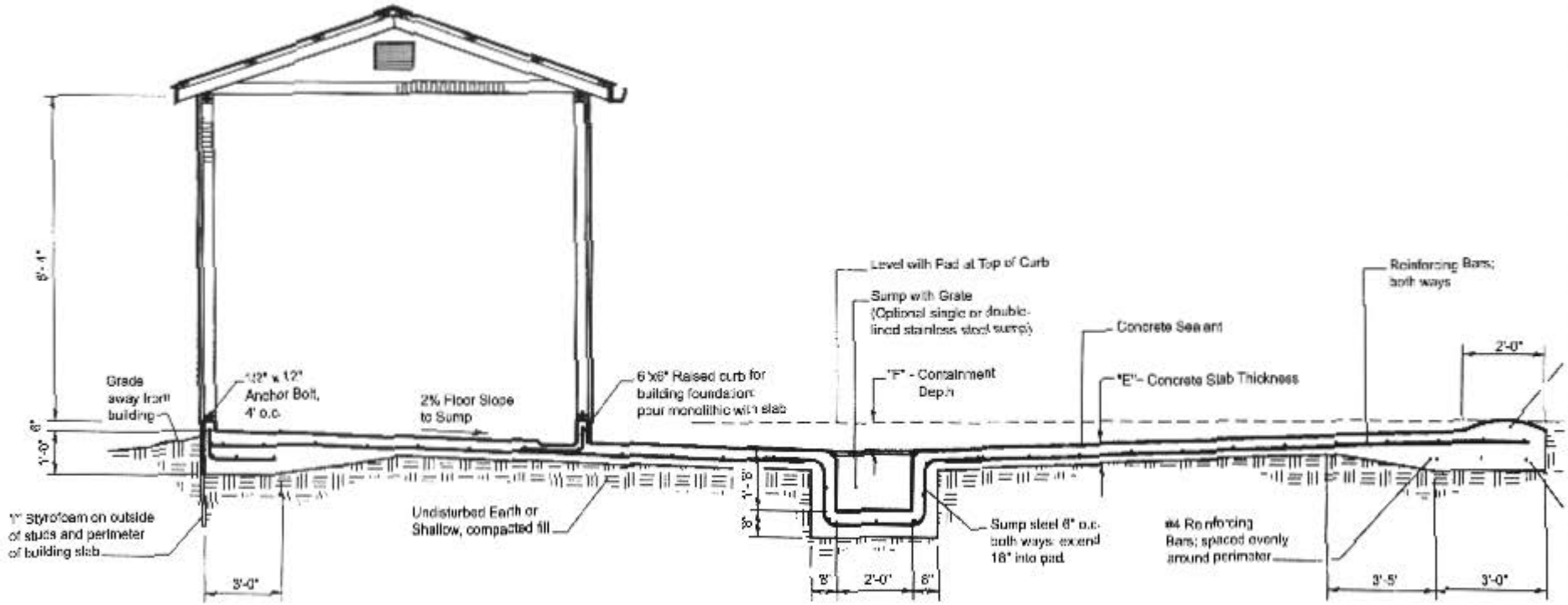

Figure 5. Cross-section of single sump mix/load pad with pesticide storage. See Table 1 for dimensions.

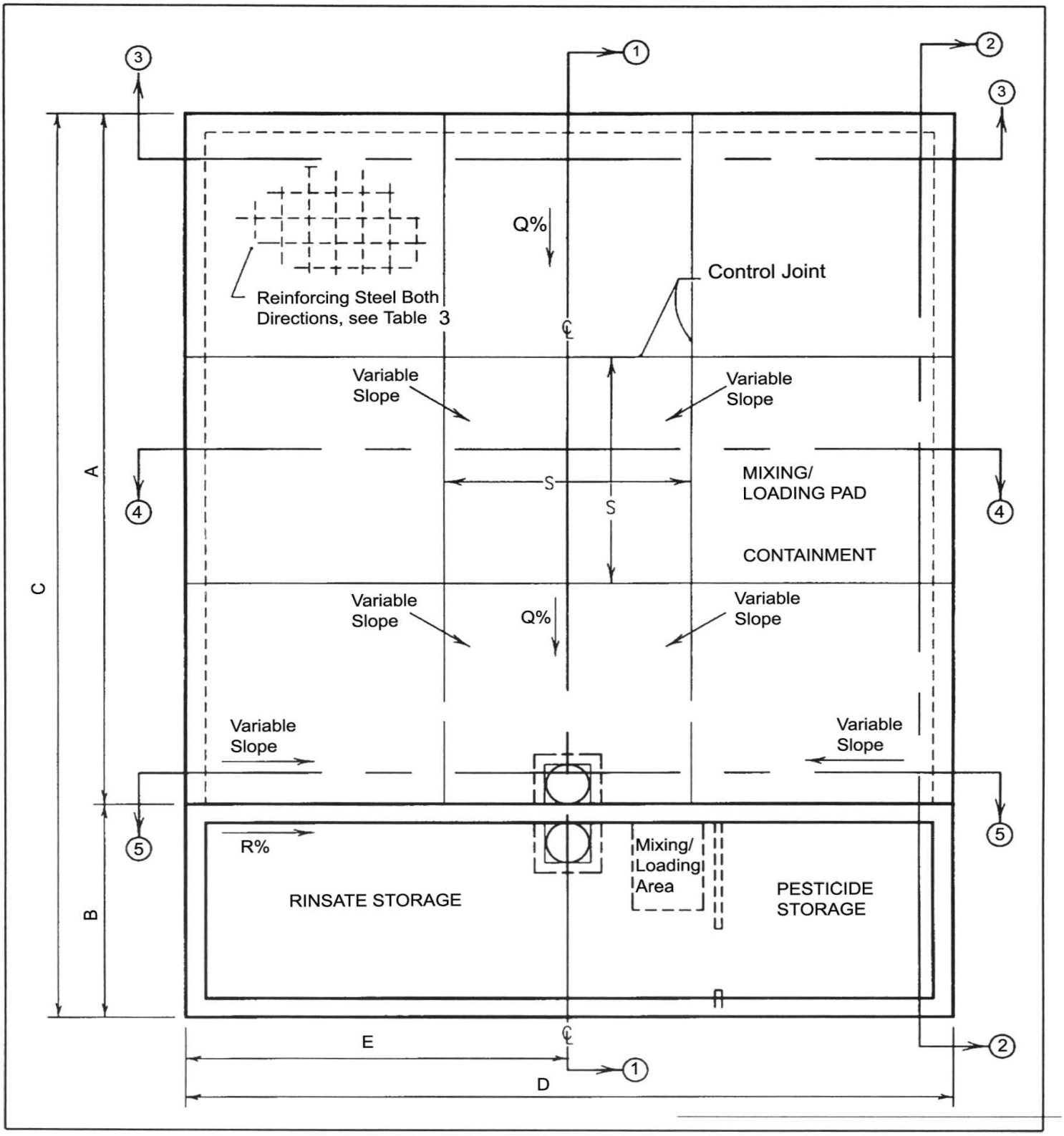

Figure 6. Plan view of double sump mixing/loading pad with pesticide storage. See Table 2 for dimensions. See Fig. 7 for the section views.

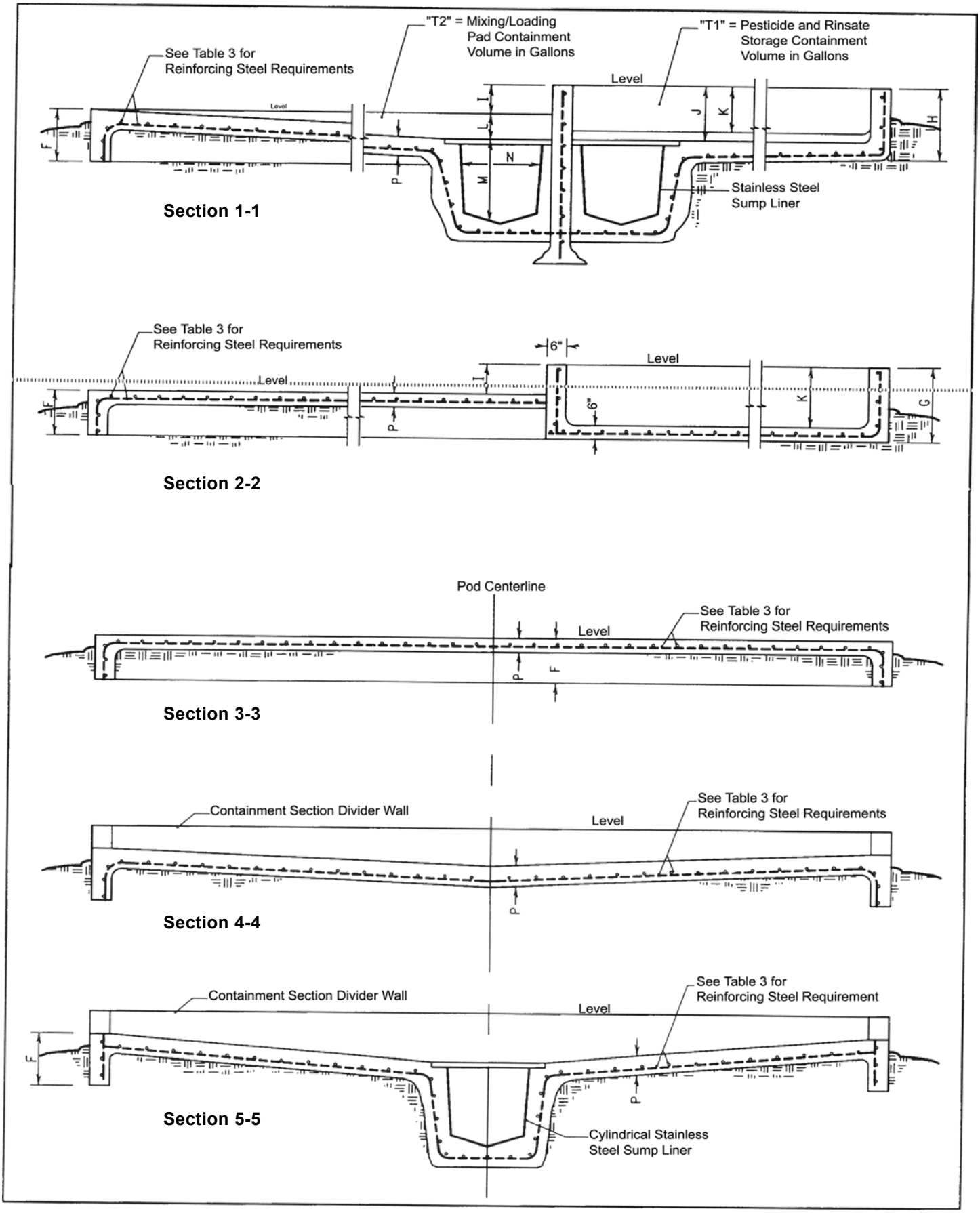

Figure 7. Cross-section and End-sections of double sump mix/load pad with pesticide storage. See Table 2 for dimensions. See Fig.17 and 18 for sump design options. See Fig. 6 for section locations.

II. Dry Agricultural Chemical Mix/Load Pad

Dry bulk agricultural chemicals must be stored and handled in a manner to prevent contact with precipitation and the surrounding earth, and be easily recovered in the event of a spill. Thus storage requires a roofed structure with a suitable floor. Mixing and loading areas also require a suitable surface. Suitable materials include concrete and asphalt, which will be discussed later.

The primary criteria of a mix/load pad for dry chemicals are: adequate strength to handle anticipated wheel loads of vehicles served; creation of a barrier between the product handled and the earth; and a surface where spills can be easily recovered by sweeping. A flat concrete or asphalt pad will meet these criteria. Such a pad should have a slight slope (2 percent) to drain storm water away from the facility. With either material, proper preparation of the subgrade is important to assure proper strength of the pad. Follow "Preparation of Subgrade" instructions in the "Concrete" section of this manual when using concrete. For asphalt, modify the last instruction as follows:

■ "Lay 6-8" base course of crushed stone on the site and compact with a roller."

■ A concrete dry chemical mix/load pad design should use Table 3 to determine slab thickness and reinforcing bar design to assure structural integrity. Seal concrete with an epoxy base coating.

An asphalt dry chemical mix/load pad design should use the following design guidelines:

■ Use dense graded hot mix asphalt (HMA).

■ Carefully choose a contractor to assure quality performance of the pad.

■ Establish the proper job mix formula to achieve the required structural strength.

■ Properly compact HMA.

■ Finish the surface of the HMA to minimize porosity.

■ Apply a chemical resistant sealant coating.

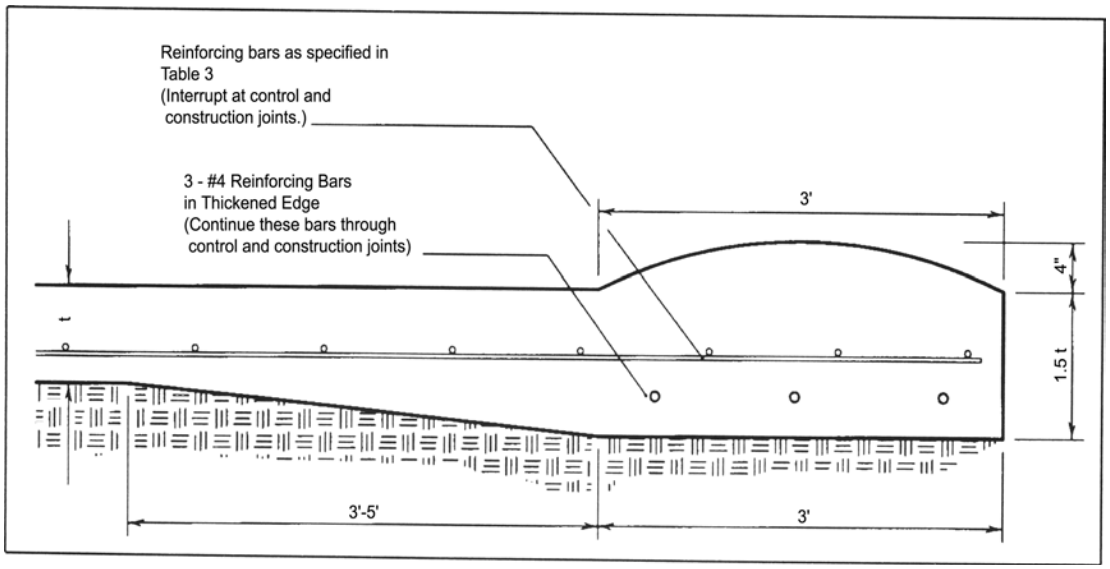

Figure 8. Rounded drive-over curb construction.

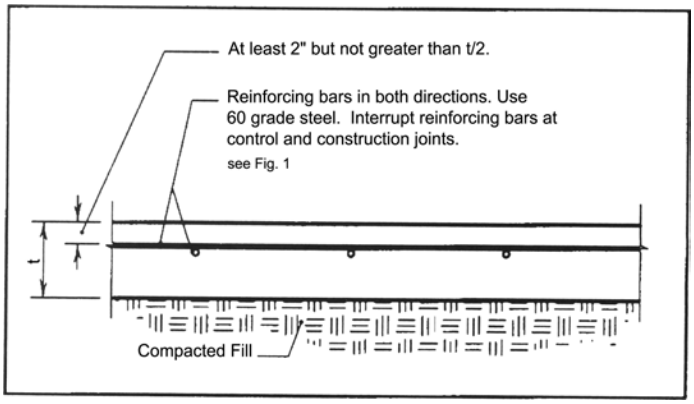

Figure 9. Mixing/loading pad structural design. See Table 3 for thickness and steel reinforcement requirements.

To use the generic secondary containment structure plans, proceed as follows:

1. Determine the number, diameter, heights, and capacity of tank(s) to be contained and depth of containment (3 feet maximum).

2. Use Table 4 to determine the floor area of the secondary containment. Floor area is dependent on the depth of containment.

3. Determine the minimum length and width of the containment using Figure 12. Calculate actual length and width dimensions to meet floor area requirements of Step 2 and minimum dimensions determined from Figure 12.

4. Determine the thickness of the concrete and reinforcing bar specifications from Table 5.

5. Determine the method of construction - either formed footing (Figure 14) or floating slab (Figure 15).

6. Use Figure 17 to construct a sump.

7. Follow the reinforcing bar detail design of Figures 13 (floor), 14 or 15 (walls), and 16 (corner) to place steel reinforcing bar.

8. Follow the fence post support detail design of Figure 19 or 20.

9. Securely mount tanks on adequately anchored support brackets so that tanks are above level of containment wall in order to prevent flotation problems in the event of a discharge (see Figure 21).

10. If tanks are to be placed directly on secondary containment floor, see *Design Facilities for Pesticide and Fertilizer Containment*, MWPS-37, pp.30-34 for design specifications for anchoring tanks.

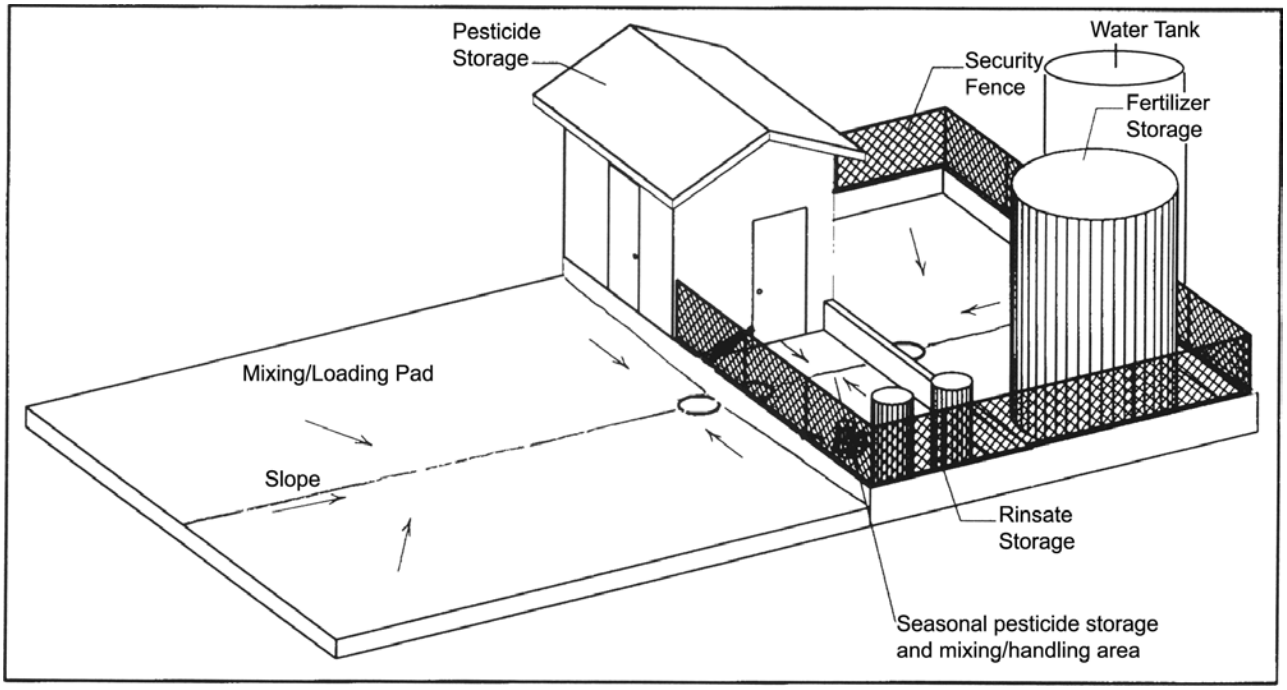

Figure 10. Secondary containment for fertilizer and pesticide storage with mix/load pad.

IIB. SECONDARY CONTAINMENT DESIGN

The secondary containment structure in these generic plans is essentially an open top concrete box adjoining a mix/load pad (see Figure 10). The design shows separate containment for pesticide and fertilizer storage.

8 CCR 1206-1 requires the secondary containment design to adhere to the following design elements:

■ The secondary containment structure shall provide capacity totaling:
The capacity of the largest storage container in the containment; plus
The total volume of the liquid displaced by the submerged portions of all other storage containers, appurtenances, fixtures, and materials located in the containment; plus
Twenty-five percent of the capacity of the largest storage container in the containment for an unroofed structure.

■ Provide site drainage away from the containment structure.

■ The floor of the secondary containment structure must support the gravity loads of full tanks.

■ The walls of the secondary containment structure must resist static and dynamic hydraulic loads.

■ The floor must be designed to drain liquids to a shallow sump.

■ Sump shall be constructed of materials which resist or can be treated to resist corrosion.

■ Walls must be of a height so as to allow easy inspection of tanks from outside and easy egress from the containment area.

■ There must be sufficient clearance between tanks and walls to allow for visual inspection of tanks.

■ There shall be no outlets through the walls or floor.

■ Required electrical controls shall be elevated above the level of the containment wall.

■ Bulk storage containers shall be anchored or elevated to prevent flotation or instability.

■ Secondary containment is protected from unauthorized access.

■ Pesticides and fertilizers are stored in separate containments.

There are recommended design elements to consider in developing a secondary containment design, including:

■ Using drip pans under all valves and pumps to minimize drips onto concrete.

■ Orienting tank weld seams and outlet valves toward the center of the containment area (see Figure 11).

In developing these plans for small to medium sized facilities, several assumptions were made including:

■ Plans show containment for pesticide and fertilizer. (If only fertilizer containment is needed, eliminate the pesticide containment).

■ Sizing of floor area is based on containment accommodating up to two vertical flat bottom tanks. Both tanks are the same size and are not elevated above the containment floor. Use of elevated tanks is acceptable and will result in a more conservative design.

■ Tank capacity ranging from 1,760 to 11,750 gallons.

■ Height of containment is a maximum of 3 feet.

■ Fencing is installed atop containment wall. Fencing is 6 feet high, made of 12-gauge, hardened steel wire mesh with 3 x 3 diagonal spacing.

■ Containment flooring has a 2 percent slope to a sump.

■ Tanks are located a minimum of 3 feet from the walls and each other.

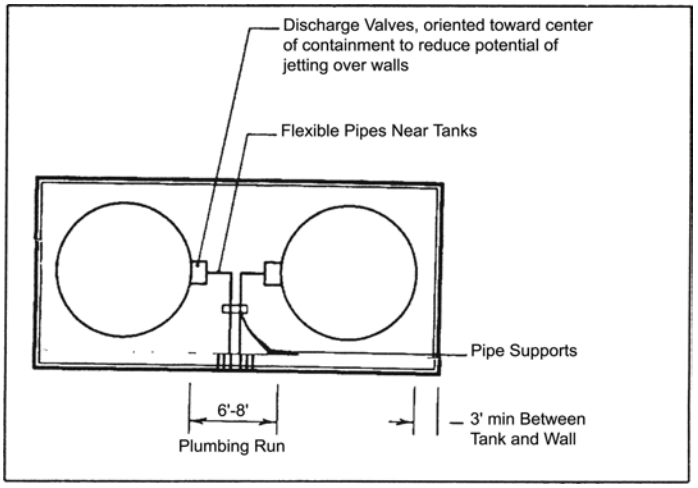

Figure 11. Tank orientation and spacing in secondary containment.

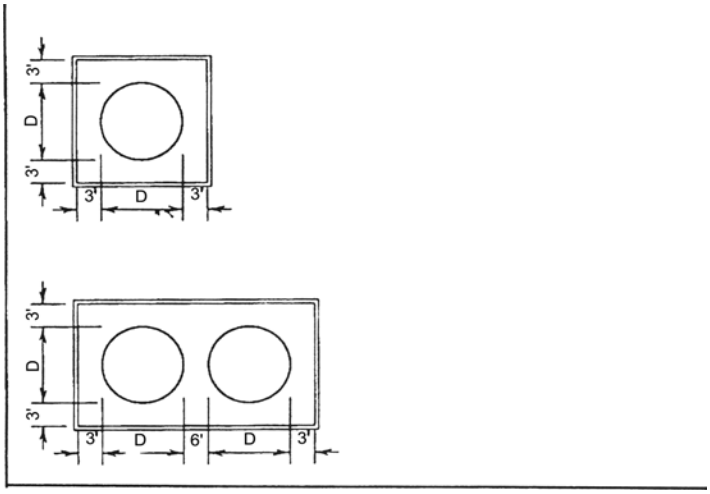

Figure 12. Minimum dimensions to provide adequate tank clearance. D= Tank diameter(ft). Inside dimensions are for a 3' space between tank and wall. For vertical tanks, all the same diameter.

Table 4. Secondary containment floor area (CFA) for vertical tanks

Capacity gallon	Tank diameter, ft.	Tank height, ft.	Tank area, ft.^{2}	Cont. depth, ft.	Number of Tanks 1 CFA	2
11,750	10	20	79	1	1,963	2,042
	10	20		2	982	1,060
	10	20		3	654	733
9,517	9	20	64	1	1,590	1,694
	9	20		2	795	859
	9	20		3	530	594
6,678	8	18	50	1	1,131	1,181
	8	18		2	565	616
	8	18		3	377	427
4,605	7	16	38	1	770	808
	7	16		2	385	423
	7	16		3	257	299
2,960	6	14	28	1	495	523
	6	14		2	247	276
	6	14		3	165	252
1,760	5	12	20	1	295	314
	5	12		2	147	209
	5	12		3	121	209

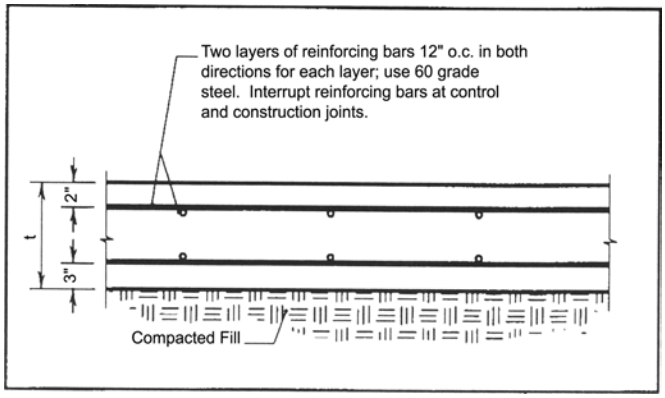

Figure 13. Secondary containment floor structural design. See Table 5 for thickness and steel reinforcement requirements.

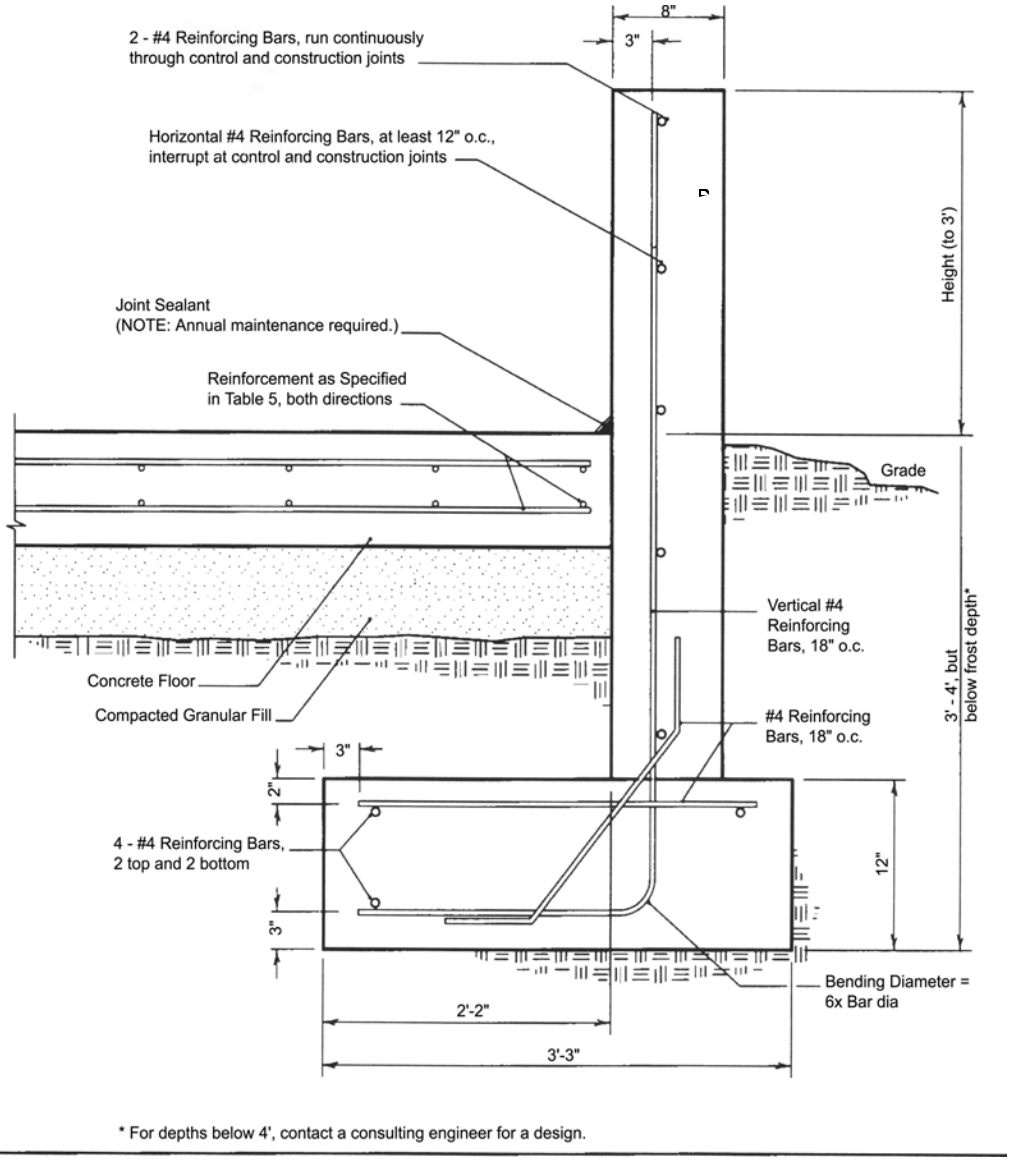

Figure 14. Secondary containment wall on formed footing. Use 60 grade steel and 4,000 psi concrete. Floor thickness and steel reinforcement are as given in Table 5. Install a control joint in wall at each floor control joint, but no more than 30° o.c. Nonuniform movement between floor and wall due to frost heaving could be a problem with this construction. Provide good drainage from the entire site.

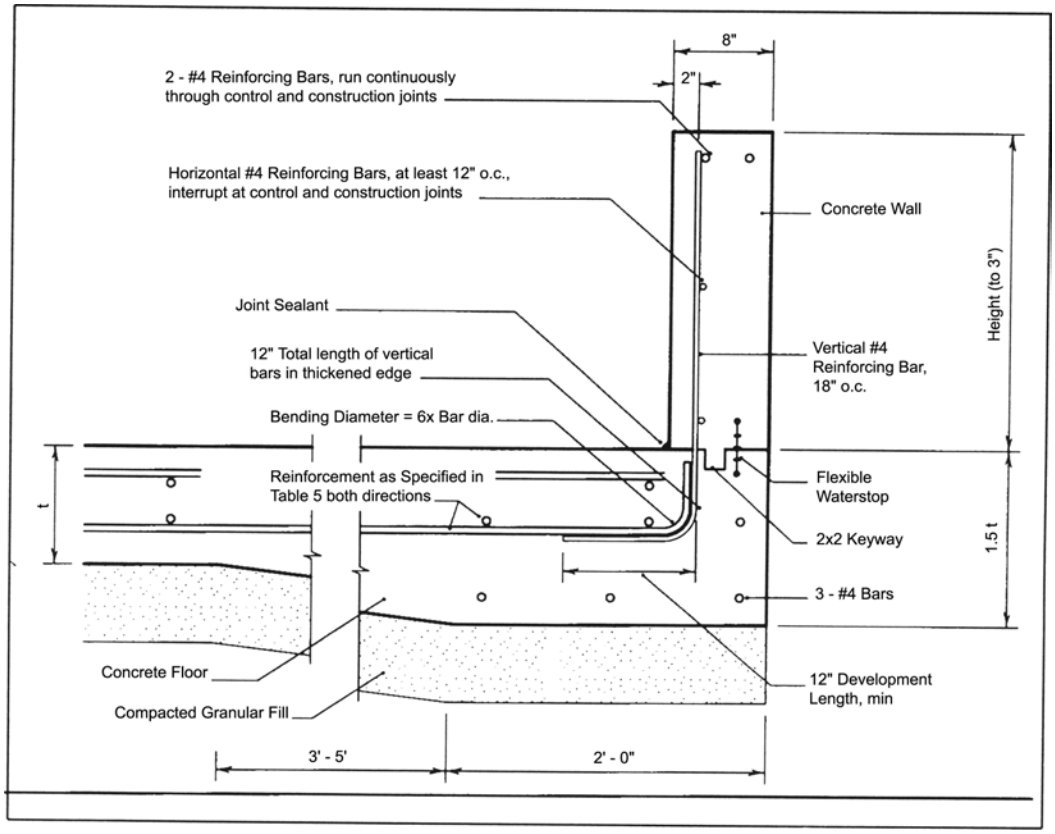

Figure 15. Secondary Containment Wall on floating slab. Use 60 grade steel and 4,000 psi concrete. Floor thickness and steel reinforcement are as given in Table 5. Install a control joint in wall at each floor control joint, but no more that 30° o.c.

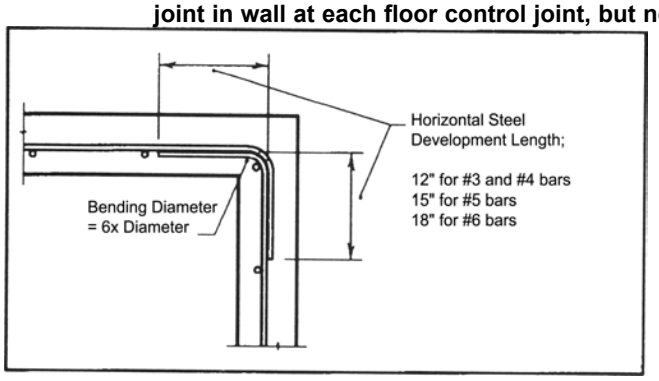

Figure 16. Wall corner reinforcement detail.

Table 5. Secondary containment floor design.
Do not place secondary containment facilities over peat or soils with high organic content. The designs in this table are for poor soils (k=100 pci subgrade strength) and will be conservative in some areas. Use 60,000 psi steel and 4,000 psi concrete. Use two layers of steel bar reinforcement as shown in Fig 13.

Maximum tank height, ft.	Concrete thickness[a], in.	Reinforcing bars and spacing[b]	Area of steel[c] (A_s), in^2
10	8	#4, two layers, 12” o.c.	0.18
15	10	#5, two layers, 12” o.c.	0.34
20	12	#6, two layers, 12” o.c.	0.47
25	14	#7, two layers, 12” o.c.	0.62
30	14	#8, two layers, 12” o.c.	0.75

[a]Concrete thickness(t) in Fig 13.
[b]Install reinforcing bars at this spacing in both directions.
[c]A_s is per foot of width in both directions.

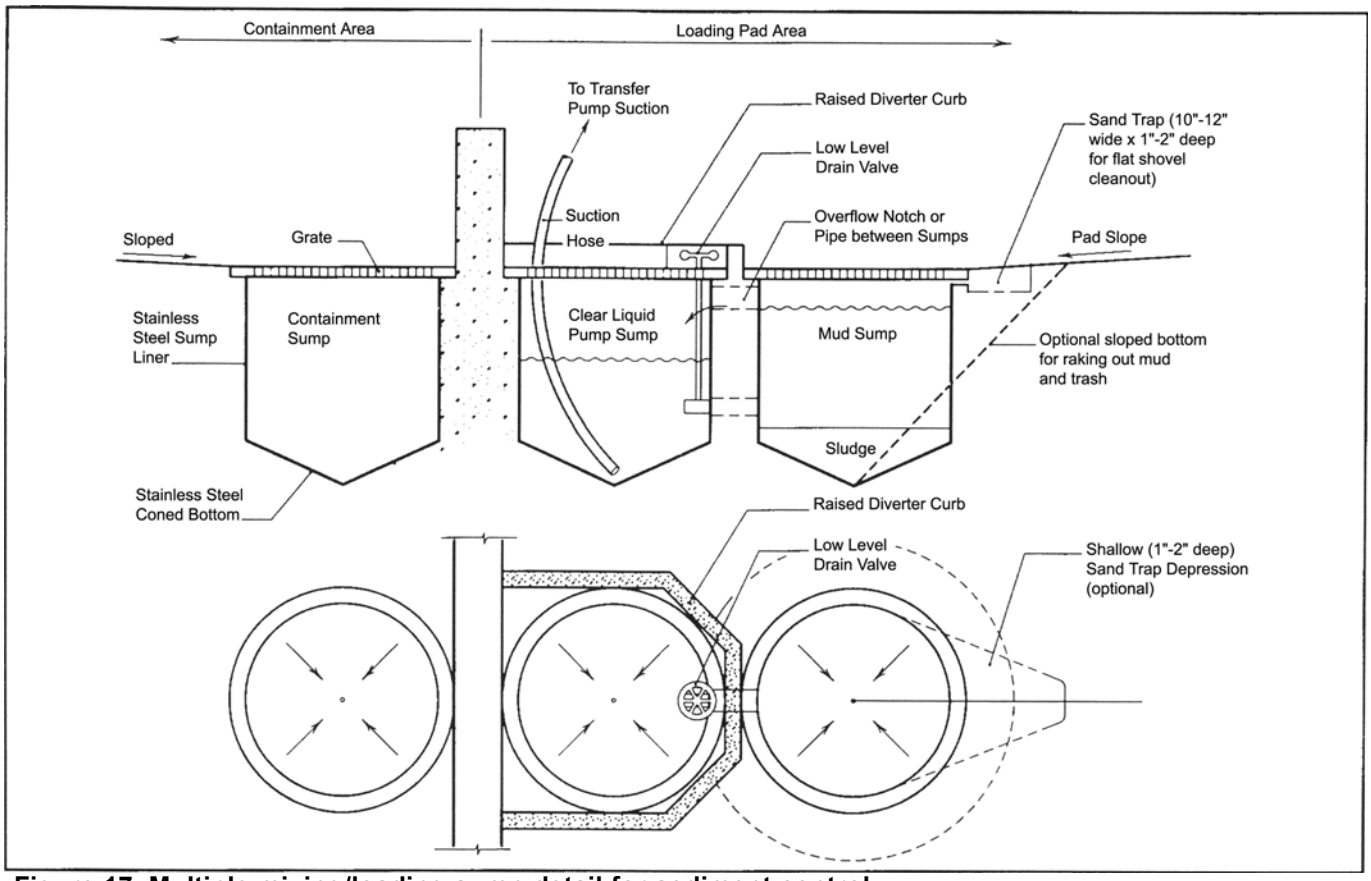

Figure 17. Multiple mixing/loading sump detail for sediment control.

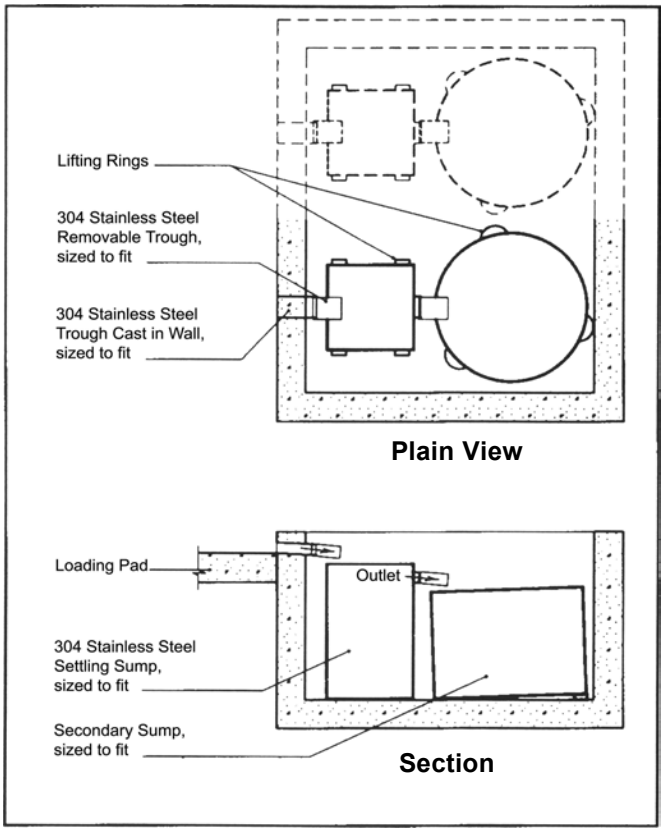

Figure 18. Multiple sump pit with removable stainless sump containers.

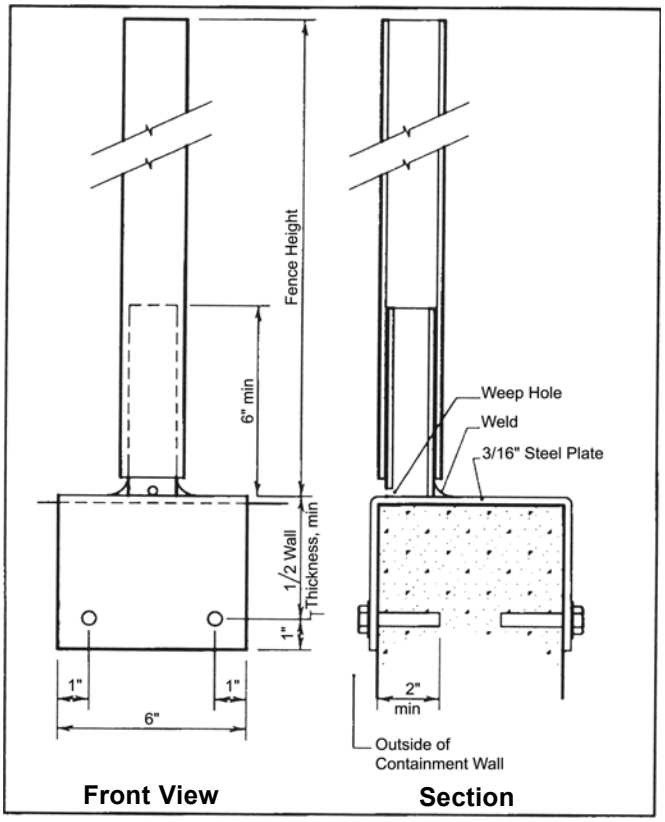

Figure 19. Metal saddle supports for fence posts.

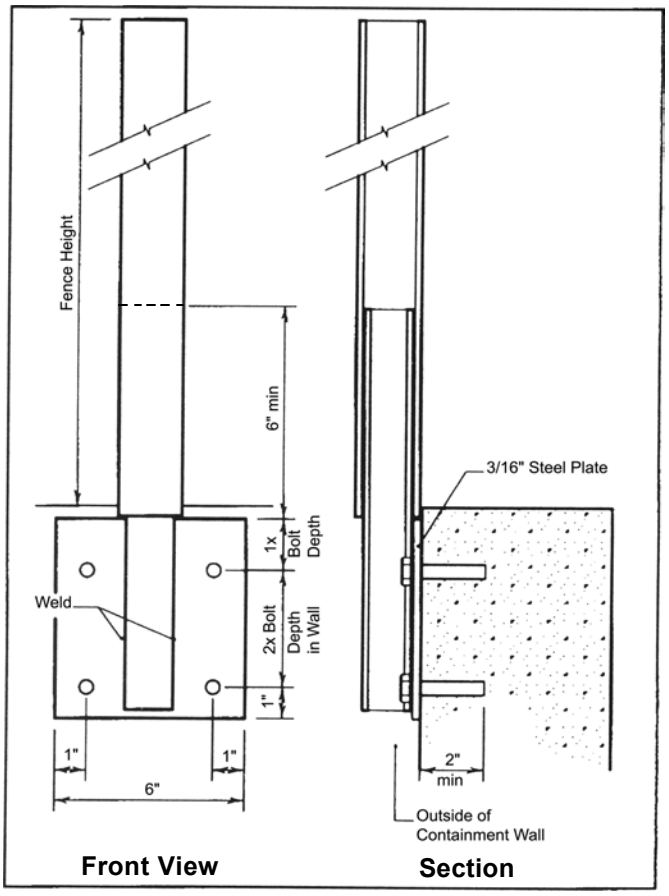

Figure 20. Wall plate supports for fence posts.

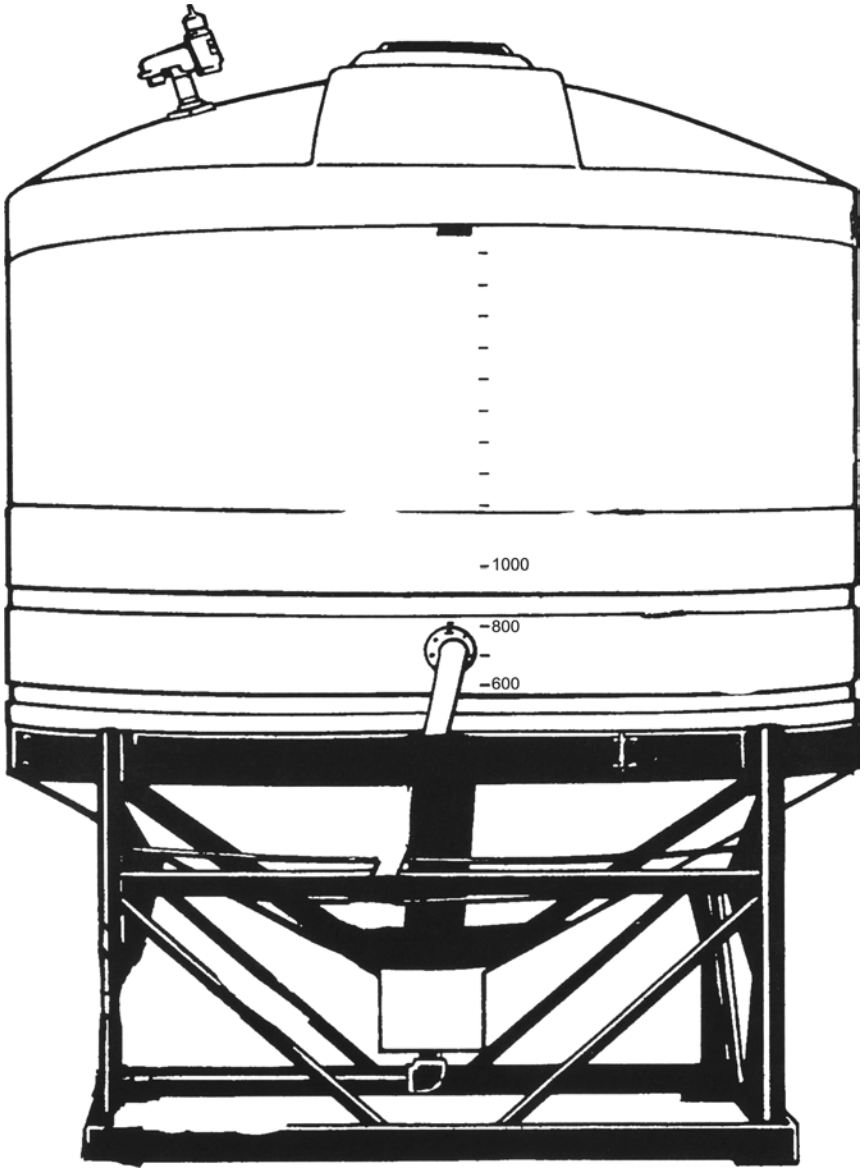

Figure 21. Tank mounted on elevated support brackets.

Agricultural Chemicals Groundwater Protection

STEEL FACILITIES

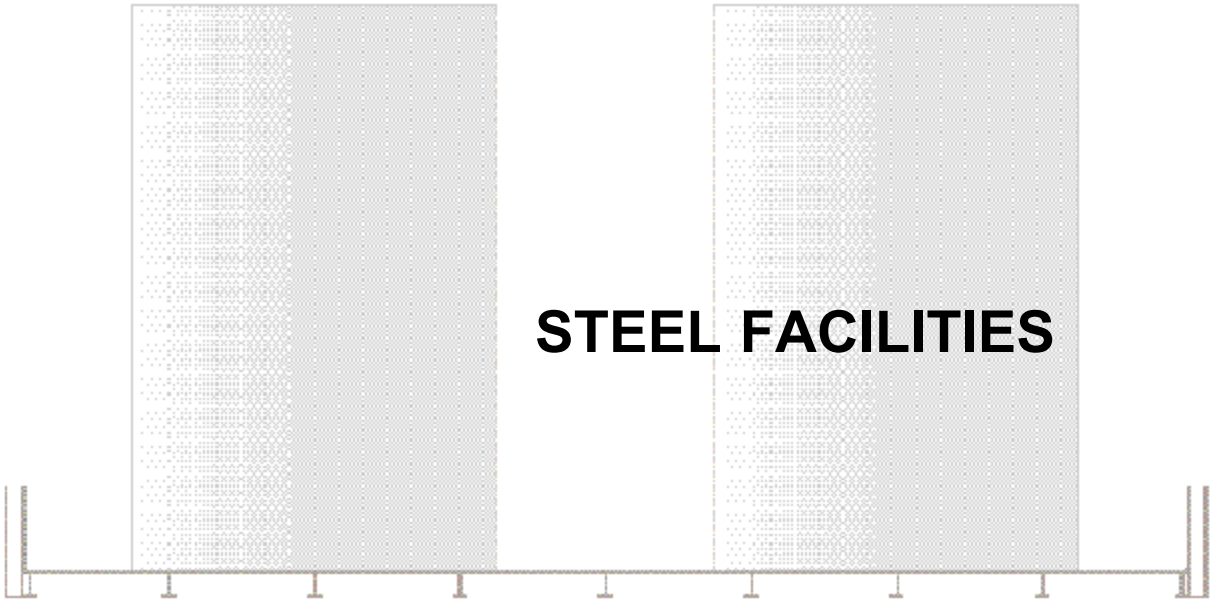

III. STEEL SECONDARY CONTAINMENT DESIGN

The secondary containment structure in these generic plans is essentially an open top steel box adjoining a mix/load pad.

8 CCR 1206-1 requires the secondary containment design to adhere to the following design elements:

■ The secondary containment structure shall provide capacity totaling:
The capacity of the largest storage container in the containment; plus
The total volume of the liquid displaced by the submerged portions of all other storage containers, appurtenances, fixtures, and materials located in the containment; plus
Twenty-five percent of the capacity of the largest storage container in the containment for an unroofed structure.

■ Provide site drainage away from the containment structure.

■ The floor of the secondary containment structure must support the gravity loads of full tanks.

■ The walls of the secondary containment structure must resist static and dynamic hydraulic loads.

■ The floor must be designed to drain liquids to a shallow sump.

■ Sump shall be constructed of materials which resist or can be treated to resist corrosion.

■ Walls must be of a height so as to allow easy inspection of tanks from outside and easy egress from the containment area.

■ There must be sufficient clearance between tanks and walls to allow for visual inspection of tanks.

■ There shall be no outlets through the walls or floor.

■ Required electrical controls shall be elevated above the level of the containment wall.

■ Bulk storage containers shall be anchored or elevated to prevent flotation or instability.

■ Secondary containment is protected from unauthorized access.

■ Pesticides and fertilizers are stored in separate containments.

There are recommended design elements to consider in developing a secondary containment design, including:

■ Using drip pans under all valves and pumps to minimize drips.

■ Orienting tank weld seams and outlet valves toward the center of the containment area (see Figure 11)

In developing these plans for small to medium sized facilities, several assumptions were made including:

■ Sizing of floor area is based on containment accommodating up to two vertical flat bottom tanks. Both tanks are the same size and are not elevated above the containment floor. Use of elevated tanks is acceptable and will result in a more conservative design.

■ Tank capacity ranging from 1,760 to 11,750 gallons.

■ Height of containment is a maximum of 3 feet.

■ Fencing is installed atop containment wall. Fencing is 6 feet high, made of 12-gauge, hardened steel wire mesh with 3 x 3 diagonal spacing.

■ Containment flooring has a 2 percent slope to a sump.

■ Tanks are located a minimum of 3 feet from the walls and each other.

IIIA. SECONDARY CONTAINMENT DESIGN FOR 10 FT. DIAMETER TANKS

Purpose

To design a containment area fabricated of steel to contain two 10 ft., 9ft., or 8 ft. diameter tanks capable of containing 125% of one tank's capacity.

General

The beam spacing in the 10 ft. diameter tank model is 4 ft. on center. The exterior beams shall be spaced so they are flush with the exterior posts and provide a smooth joint for the plate to rest. See Connection Details: Connections between posts and exterior beams. The foundations for this model will provide a 2% slope toward the center of the structure. Measurements are given in feet and inches, and modification to these dimensions should be done only in consideration of connection type.

Design Criteria

- Tanks must be 3 ft. from a wall.
- Tanks must be 6 ft. from each other.
- Facility must be able to contain 3 ft. of standing water.
- 2% slope must be provided for drainage to a sump.
- Total height of facility should be less than eye level.
- The facility shall carry the weight of two full 10 ft. diameter tanks.

Design Loads

- 3 ft. of water (187.2 lb/ft^2)
- 17 ft. of water to represent tanks (1060.8 lb/ft2)
- Self weight of structure

Area

The facility shall have a footprint of 32 ft. x 26 ft. to accommodate the 3 ft. of water and the minimum requirements for tank spacing. The design will have a 2% slope going from the outer foundation walls to the inner foundation wall.

Foundation

There will be 3 foundations of 32 ft long at the outer edges and the middle of the facility. The foundations will be of the nature of strip footings. The exterior foundation walls will rise 1 ft. above ground level, and the interior foundation wall will rise 9 in. above the ground (see Figure 3). The foundations will be designed as per the design of the foundations for concrete provided in this booklet. The sump will be built into the middle foundation and may be under the center beam or to the side of the center beam. The center beam may be cut around the sump provided that an adequate foundation and connection to the foundation is provided. Otherwise, it is recommended that the sump be placed as a part of placing the foundation, cast in place with the concrete.

Beams

The beams shall be determined by the minimum yield strength of the steel and the desired height of the facility. The outer beam may be taken as a C10x15.3 or a C8x13.75 if it will facilitate bolted connections. Beams shall be at least 13 ft. in length except the beam over the sump; which may be shorter if adequate support exists around the sump. Beams shall be placed according to the diagram shown in Figure 2. Consult Table 1 for determining beam type.

Table 1. Beam Cross Section

Desired Height	Type of Steel	Beam
4ft 8in.	36 ksi	W8x18
	50 ksi	W8x15
4ft 10in.	36 ksi	W10x15
	50 ksi	W10x12

Posts

Posts shall be connected to outer beams by means of welds or bolts. If bolts are to be used, a C10x15.3 or C8x13.75 on the outer beams may be taken to facilitate bolted connections. Posts shall be W6x9 in size and be at least 3 ft. + beam depth. Additional length may be needed on the exterior foundations if posts are going to be bolted into the foundation. Posts shall be placed according to the diagram shown in Figure 2.

Plate

The plate covering the beams shall be at least 3/8 in. thick and be of 50 ksi or 36 ksi steel. The plate covering over the W6x9 posts shall be at least 1/4 in. thick with 3/8 in. being preferred. The plate will be welded along the length of the beam on the underside and the length of the joint on the topside. The plate shall be welded along the length of the posts on the edge and shall be welded on the inside to the post connected to the middle foundation. Plates will be cut to fit between posts. The plate connected to the beams should be placed before the plate connected to the posts.

Tanks

Tanks shall be placed 3 ft. from the edge of any wall and 6 ft. from each other. The center of the tank will be placed on top of a beam and on top of the center foundation. See Figure 1.

Sump

The sump shall be placed in the center of the facility (see Figure 1), a grate should be placed on top of the sump and the plate should be cut smaller than the sump unless a tight seal can be developed by other means. The middle beam may be cut provided adequate support is available. This will allow for the sump to be raised to the level of the plate. Otherwise encase the space between the top of the sump and the plate in concrete and provide seals for the sump and the plate.

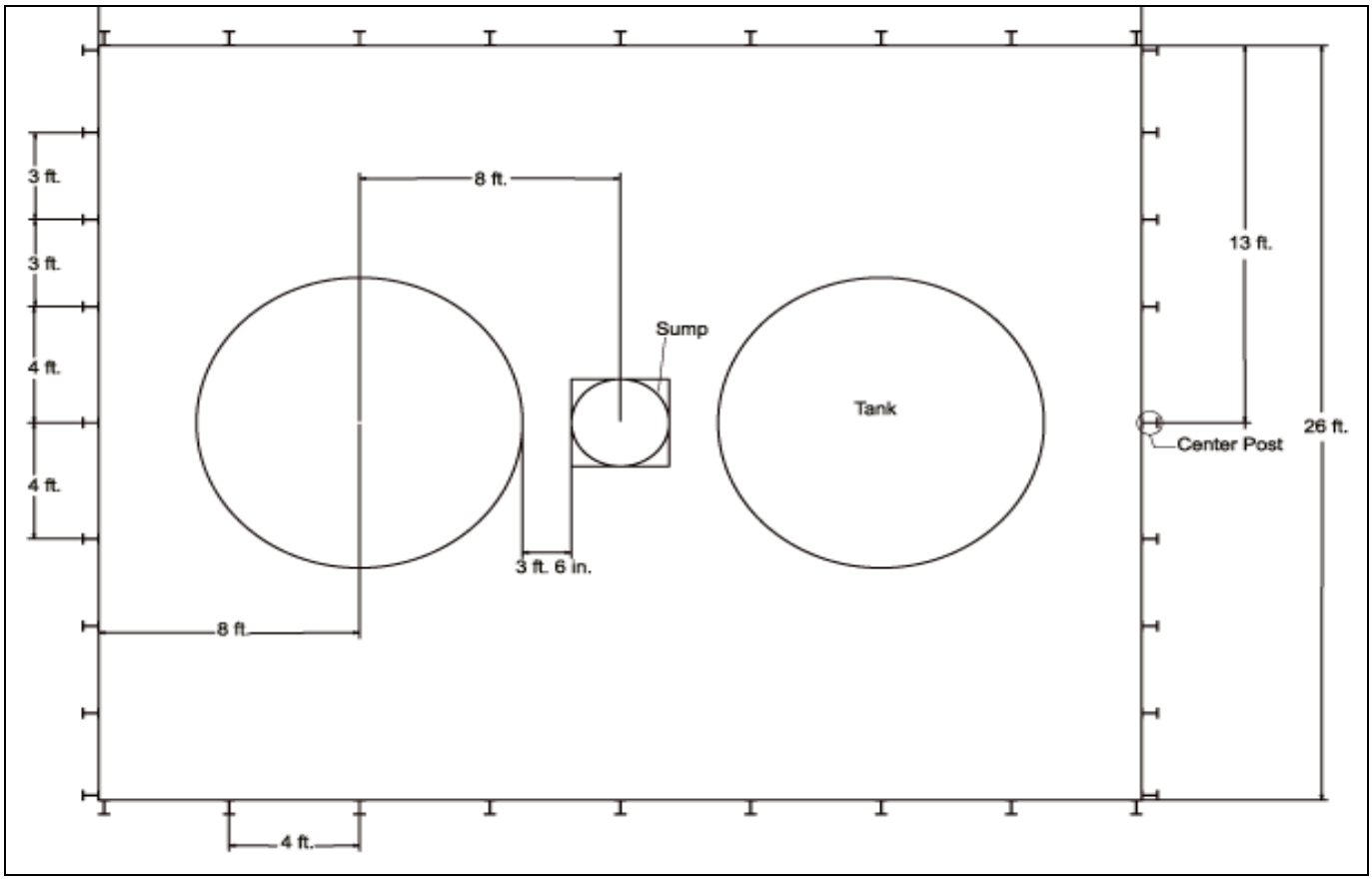

Figure 1. Overhead view of 10 ft. tank design.

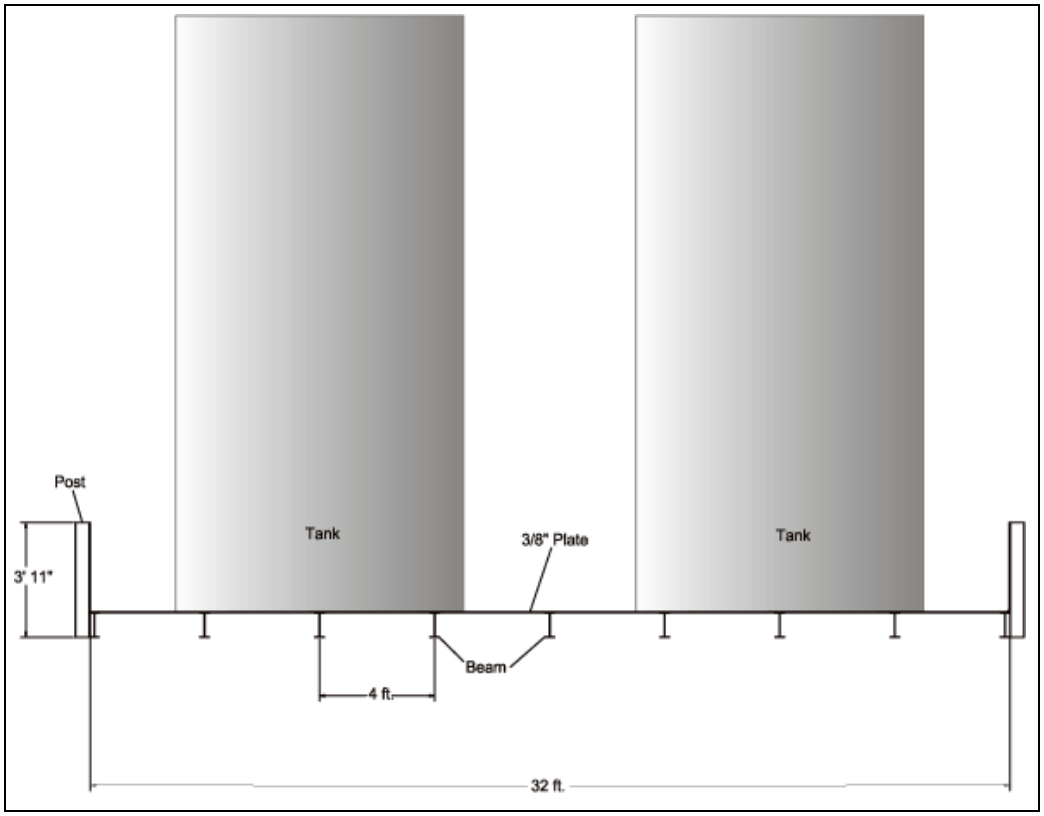

Figure 2. Front view of 10 ft. diameter tank design.

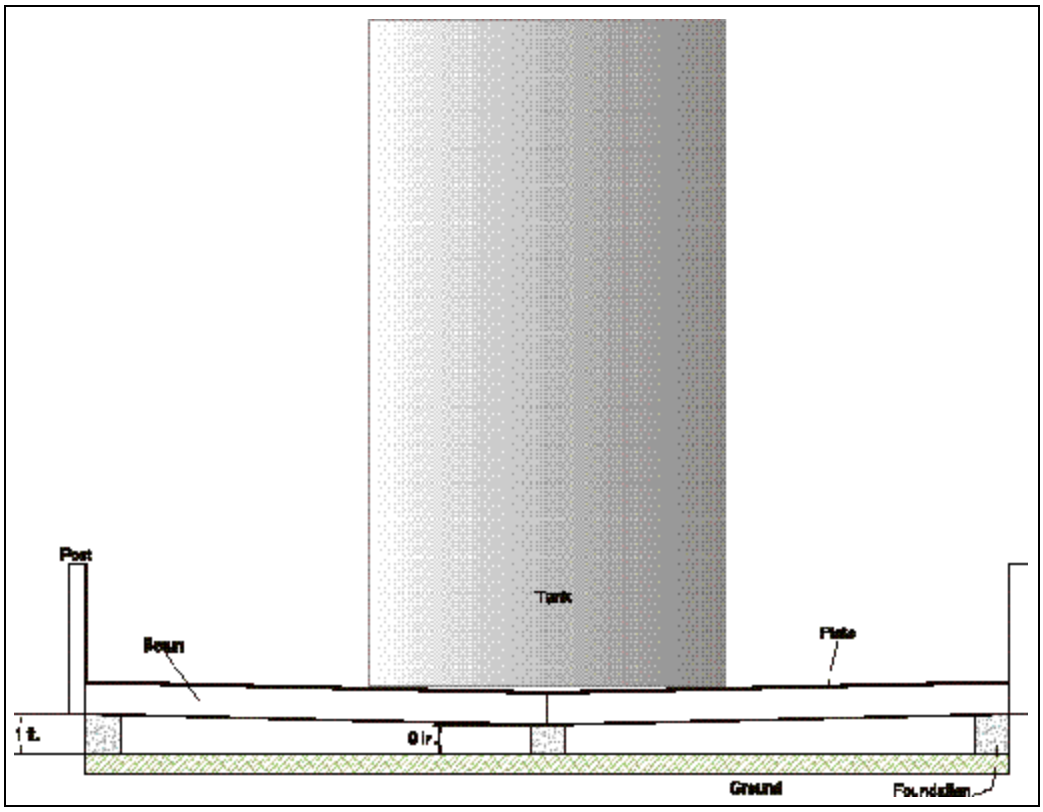

Figure 3. Side view of 10 ft. diameter tank design.

IIIB. SECONDARY CONTAINMENT DESIGN FOR 7 FT. DIAMETER TANKS

Purpose

To design a containment area fabricated of steel to contain two 7 ft., 6 ft., or 5 ft. diameter tanks capable of containing 125% of one tank's capacity.

General

The span length of the beams for this model is 13 ft. Beams should remain this size unless connection options provide longer beams. All plates should be cut to fit and welds should be watertight. The 2% slope will be provided along the 13 ft. length, the entire structure shall have a 2% slope towards the sump. The sump will be placed next to the 9" tall foundation wall. See Figure 6.

Design Criteria

- Tanks must be 3 ft. from a wall.
- Tanks must be 6 ft. from each other.
- Facility must be able to contain 3 ft. of standing water.
- 2% slope must be provided for drainage to a sump.
- Total height of facility should be less than eye level.
- The facility shall carry the weight of two full 7 ft. diameter tanks.

Design Loads

- 3 ft. of water (187.2 lb/ft^2)
- 13 ft. of water to represent tanks (811.2 lb/ft^2)
- Self weight of structure

Area

The facility shall have a footprint of 27 ft. x 13 ft. to accommodate the 3 ft. of water and the minimum requirements for tank spacing. The design will have a 2% slope between the outer foundation walls.

Foundation

There will be 2 foundations of 27 ft. in length at the outer edges of the facility. The foundations will be of the nature of strip footings. The foundations will be designed as per the design of the foundations for concrete provided in this booklet. The sump will be built into the lower foundation wall and will be between the two middle beams. See Figure 6.

Beams

The beams shall be determined by the minimum yield strength of steel and the desired height of the facility. The outer beam may be taken as a C10x15.3 or a C8x13.75 if it will facilitate bolted connections. Beams shall be at least 13 ft. in length. Beams shall be placed according to Figure 5. Consult Table 2 for determining beam type.

Table 2. Beam Cross Section

Desired Height	Type of Steel	Beam
4ft 8in.	36 ksi	W8x21
	50 ksi	W8x18
4ft 10in.	36 ksi	W10x19
	50 ksi	W10x15

Posts

Posts shall be connected to outer beams by means of welds or bolts. If bolts are to be used, a C10x15.3 or C8x13.75 on the outer beams may be taken to facilitate bolted connections. Posts shall be W6x9 in size and be at least 3 ft. plus beam depth. Additional length may be needed on the exterior foundations if posts are going to be bolted into the foundation. Posts shall be placed according to schematics. See Figure 6.

Plate

The plate covering the beams shall be at least 3/8 in. thick and be of 50 ksi or 36 ksi steel. The plate covering over the W6x9 posts shall be at least 1/4 in. thick with 3/8 in. being preferred. The plate will be welded along the length of the beam on the underside and the length of the joint on the top side. The plate shall be welded along the length of the posts on the edge, and shall be welded on the inside to the post connected to the middle foundation. Plates will be cut to fit between posts. The plate connected to the beams should be placed before the plate connected to the posts.

Tanks

Tanks shall be placed 3 ft. from the edge of any wall and 6 ft. from each other. The center of the tank will be placed on top of a beam. See Figure 4

Sump

The sump shall be placed in the center of the lower foundation wall, a grate should be placed on top of the sump and the plate should be cut smaller than the sump unless a tight seal can be developed by other means. See Figure 4.

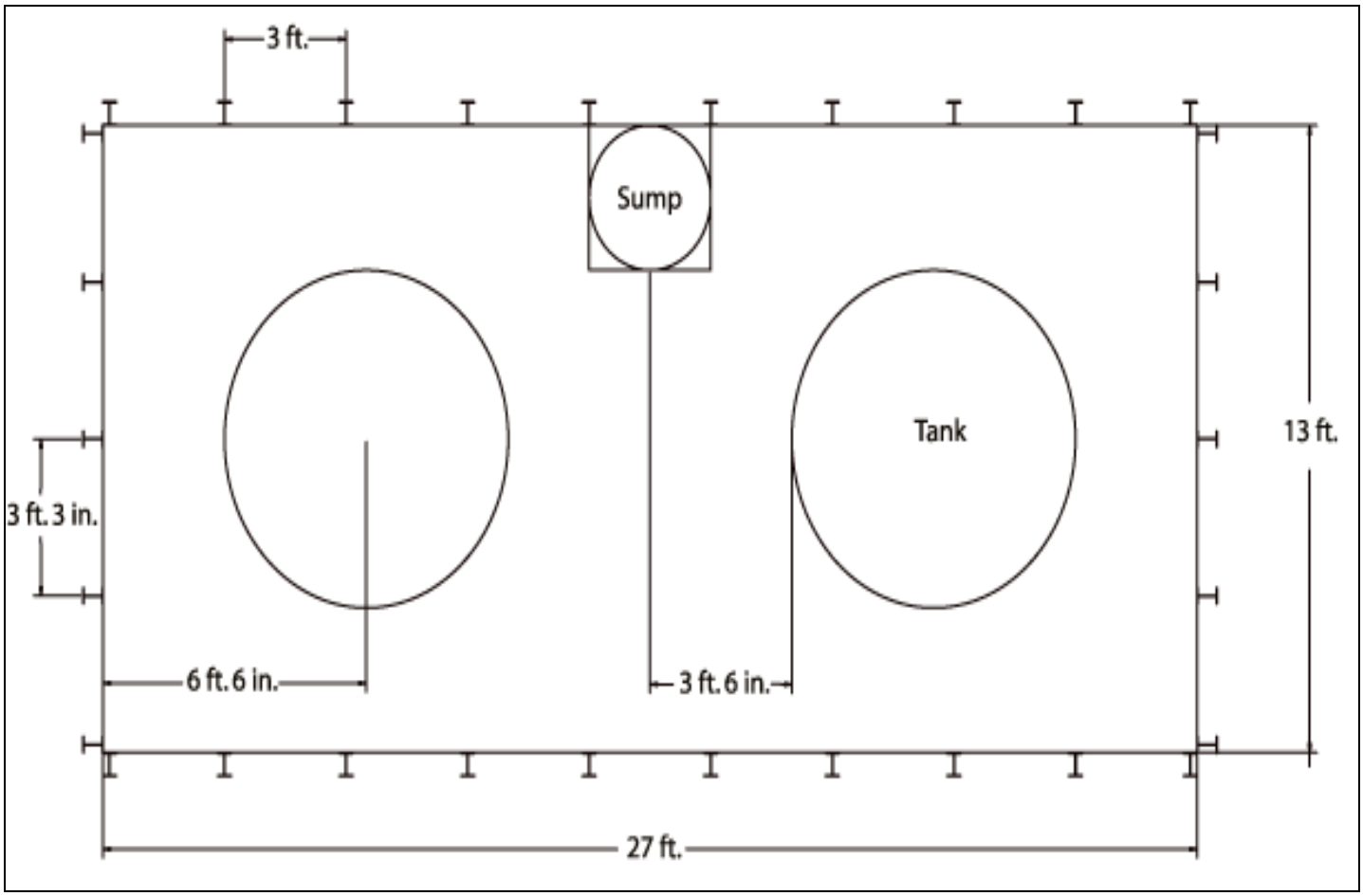

Figure 4. Overhead view of 7 ft. diameter design.

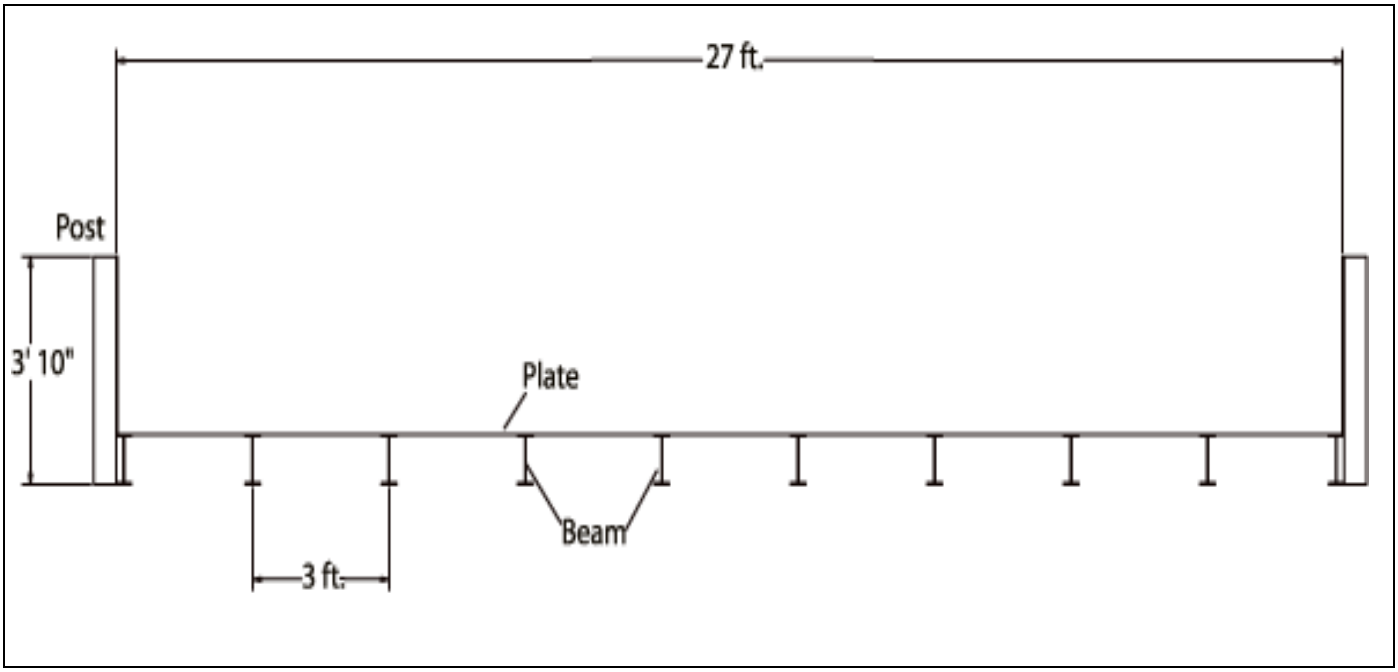

Figure 5. Front view of 7 ft. diameter design.

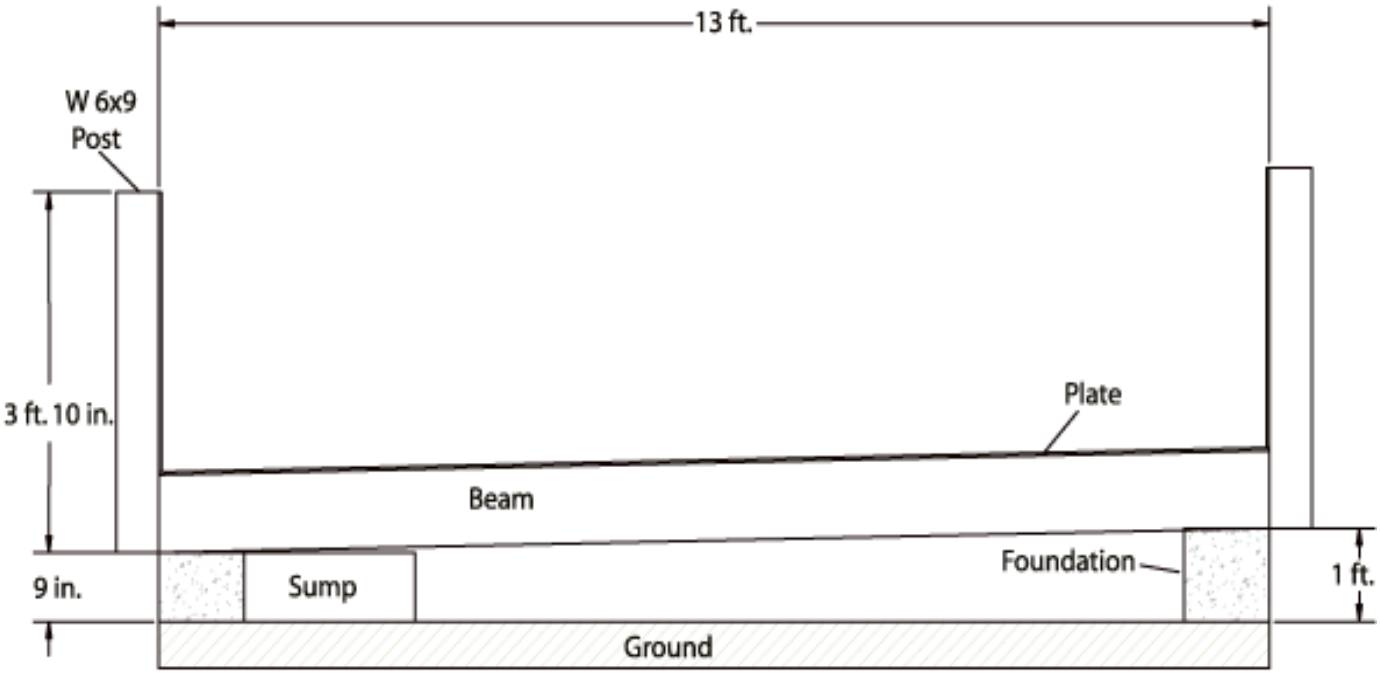

Figure 6. Side view of 7 ft. diameter design.

IIIC. CONNECTION DETAILS

General

All connection details apply to all instances of the specified circumstance. Bolts should be of the same quality and size throughout the structure. Slotted or elongated holes may be used to facilitate easier connections.

Between exterior beams and posts along the short length

The connection between the 13 ft. beams and the posts is shown in Figure 7. When using a channel section, the connection should be made using bolts between the flange of the post and the web of the channel. The use of 3/4 in. bolts is preferred. If W shape beams are to be used, it is recommended that welds be used to connect the flange of the posts to the flange of the beams. The bead of weld should extend the entire width of the post's flange and be sufficient to hold the post in place.

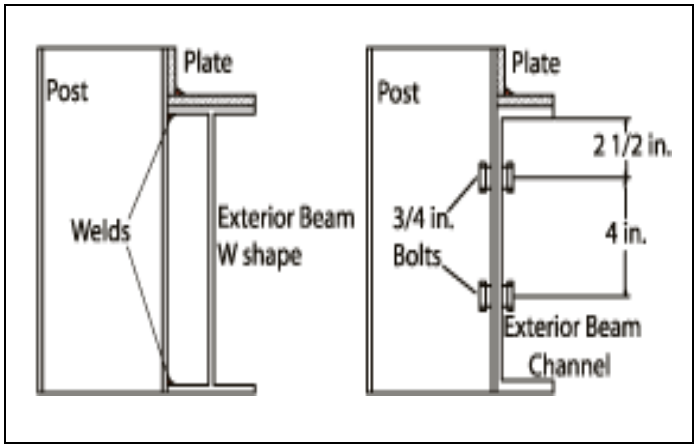

Figure 7. Exterior beam connection with Posts.

Connections between beams and foundations

Connection details shall apply for all beams on exterior foundation walls.

Option 1

The connection between the beam and the foundation should be adequate to hold the structure in place. The beam should cover 6 in. of the 1 ft. wide foundation and the post should cover the remaining 6 in. One 3/4 in. anchor bolt should be placed on each side of the web 2 in. from the post into the flange of the beam. This bolt should be anchored into the foundation and then a cap plate should be placed on the foundation. Welds should be made between the posts and the cap plate as well as between the beam and the post. Welds should be made all along the flange of the post. See Figure 8 for more details.

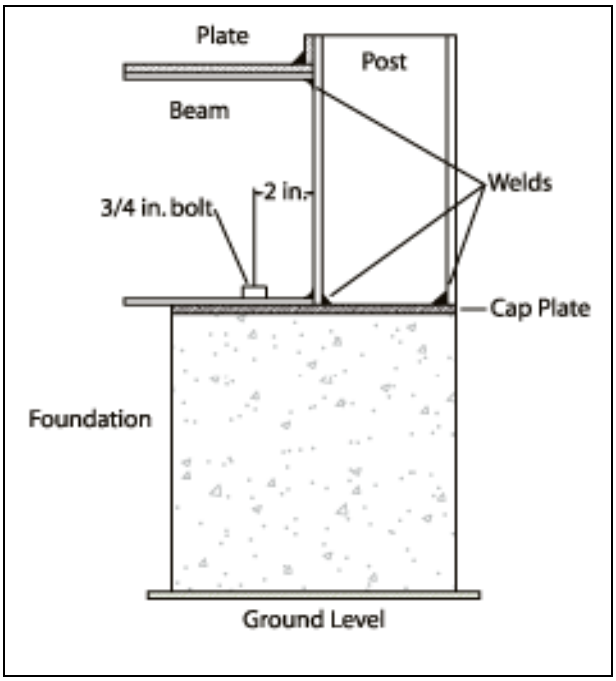

Figure 8. Option 1, beam and post on top of foundation.

Option 2

The connection between the beam and the foundation should be adequate to hold the structure in place. The beam should cover between 10-12 in. of the 1 ft. wide foundation wall. Beams may need to be greater than 13 ft. in order to occupy more of the foundation; it may be possible to place the foundation towards the center of the structure to decrease the length of the beam. The post will then be welded onto the beam and should hang over the edge of the foundation. Two 3/4 in. bolts per flange should connect the beam to the cap plate and the foundation. The first bolt should be spaced 3.5 in. from the post and the second bolt should be spaced 5 in. from the first bolt. These bolts should be anchored into the foundation. Welds will be along the entire flange of the post and posts may or may not be welded to the cap plate. See Figure 9 for more details.

10 ft. Diameter tanks special consideration

Since the span of the beams in the 10 ft. diameter tank design is slightly greater than 13 ft. due to the 2% slope toward the center, special consideration should be taken when sizing the members and the position of the foundation. It is possible to place the foundation slightly closer depending on which connection detail is used in the structure. Consideration should also be taken when sizing the length of the wall plate. The wall plate can be made to fit by cutting a small section off each end of the plate. The wall plate may also be taken slightly shorter and then welded to the end posts and center posts to prevent leakage. All plate members should be cut to fit rather than taken as 13 ft. in length. Multiple plate sections may be used to cover the 13 ft. span, but all welds must remain watertight.

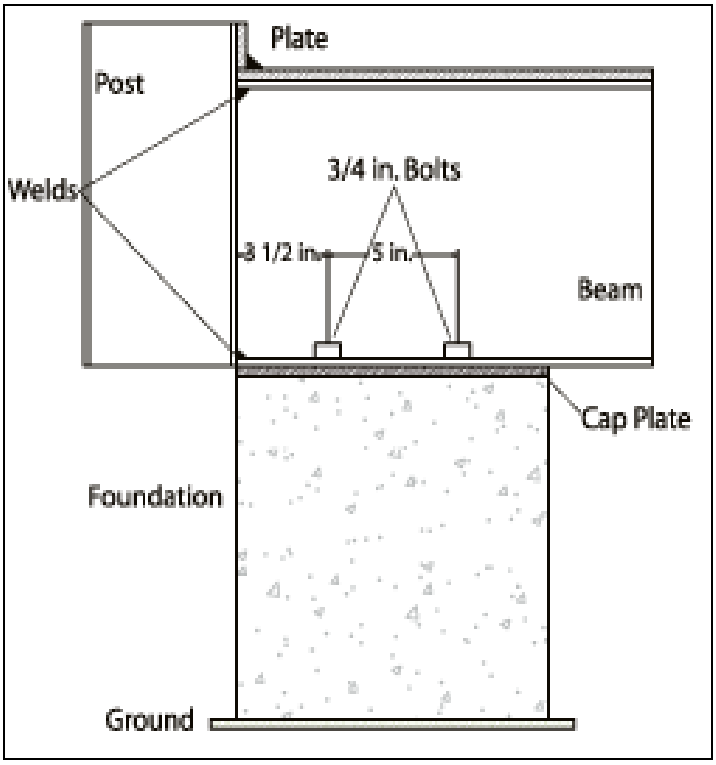

Figure 9. Option 2, beam extends a great distance on foundation and beam is bolted to foundation.