MEMO

TO: Lisa Johnson, District Manager

FROM: Andrea Bollinger

RE: May 7, 2013 Meeting Agenda Items

DATE: April 29, 2013

PROJECT: 013-0055

<u>Item IV.A. – Evaporation Ponds:</u>

1. Third evaporation pond:
   a. Concentrate Management
      i. Olsson prepared a Technical Memo on concentrate management, see attachment.

      ii. On April 22nd, Terry Krayenhagen, sent Olsson a memorandum prepared by Jeff Moeller with the Water Environment Research Foundation (WERF) for Greg Johnson with the Colorado Water Conservation Board, dated December 20, 2011 with the subject *Quarterly Report (July 18, 2011 – Oct 18, 2011)*. The memorandum discussed zero liquid discharge (ZLD) and sustainable disposal options for concentrate. A copy of the memorandum is not included with the engineering report due to its length.

      Olsson briefly reviewed the memorandum and explained ZLD is a term that represents a goal and goes back to the 'concentrating the concentrate' concept, see attached email.

   b. EDOP:
      i. Annual Reporting:
         1. Per the States Section 9 Waste Impoundments Section 9.3.5(D) Regulations, the District is required to submit an annual report summarizing the quantity of concentrate produced and disposed of at the site. Currently, the State does not have a standard form or checklist and requests applicants submit the District's available documentation. Olsson reviewed the regulations and can prepare the District's 2012 Annual Report as outlined in Exhibit A, attached.

ii. Response to State's Comments, letter dated March 21, 2013.
   1. Olsson has reviewed the State's comments and is prepared to respond. Attached in Exhibit A is an outline of the response.

iii. Section 9 Stakeholder Meeting
   1. Olsson will be attending the next Section 9 Stakeholder Meeting on April 30, 2013.

<u>Additional Engineering Items</u>

- On April 19, 2013 Olsson Associates attended a mid-month lunch meeting with Lisa Johnson, Rob Fleck, and John Wyckoff. Based on the lunch meeting, Olsson was tasked with four additional items:
  1. Contact East Cherry Creek Valley Water and Sanitation District (ECCV) to determine the viability of a onetime disposal of concentrate to their deep well injection.
     - Olsson has contacted Chris Douglass, with ECCV. ECCV is open to the concept, but would like to discuss the idea internally before scheduling a meeting.

  2. Provide a comparison of historical evaporation pond depths for the month of April.
     - Attached are the historical depths of the evaporation ponds for the month of April from 2010 through 2013.

  3. Arrange for a point of entry rep to attend June board meeting to learn more about the point of entry units.
     - I have left a message with two companies who are prepared to attend a meeting if requested.

  4. Evaluate the life of the existing ponds if they were empty and the district would operate the RO unit during winter only at a 70 (blend) /30 (treat) ratio.
     - This task is ongoing and information will be presented upon completion.

  5. During the meeting it was asked how a Point of Entry unit can discharge to a septic system and if the District would be allowed to discharge to a septic system as a means of disposing of concentrate. Construction of leach fields for septic systems is a regulated process. They are regulated differently dependent on whether they are individual residential, industrial, or utility owned. A utility owned leach field would require a discharge permit for discharge to groundwater. Typically, discharge to groundwater requires that the effluent meet groundwater standards which are protective of drinking water uses.

(This section intentionally left blank)

Josh Cook and I will attend the May 7, 2013 Board Meeting. Josh Cook is a senior engineer with Olsson who has been providing technical assistance and quality assurance and quality control reviews for the past two months. At the board meeting I will be prepared to address any of these items, as well as any additional items that may arise.

Attachments:

1. Technical Memo: Concentrate Management Options
2. 2013-04-23_ZLD email response
3. Exhibit A: Scope of Services for Annual Report and EDOP State Response
4. Historical April Evaporation Pond Depths

File Location:
G:\Office\Teams\WaterWastewater\Denver Team Folder\Greatrock North Water and Sanitation District_Board Meetings\2013\05-2013\2013-04-29_Engineering Report.docx

MEMO

TO:	Lisa Johnson, District Manager
PHONE:	303-987-0835
FROM:	Andrea Bollinger
RE:	GNWSD- Concentrate Management Options
DATE:	04/26/2013
PROJECT #:	013-0212
PHASE:	400

Concentrate management concepts were discussed at the Greatrock North Water and Sanitation District's (GNWSD) April 2, 2013 Board Meeting, as means of further reducing the quantity of concentrate in the evaporation ponds. Discussions included, surcharging irrigation water, blending concentrate with irrigation water, dual water systems in subdivisions for irrigation and potable water, ceasing RO operations, and mechanical enhancements of concentrate evaporation. Based on these discussions Olsson has been directed by the District Manager to further evaluate three of the options:

1. Concentrate and Irrigation Blending
2. Dual Water Systems
3. Ceasing Reverse Osmosis (RO) Operations

Surcharging irrigation water was not a favorable option to the Board and as a result was not investigated. Preliminary investigation into mechanical enhancements found the concept to be cost prohibitive due to the capital, operations and maintenance, and replacement costs. As a result, mechanical enhancements were not investigated further. It is important to reiterate, all of the items discussed are in addition to construction of a third evaporation pond and not in lieu of a third evaporation pond.

(This section intentionally left blank)

Option 1. Concentrate and Irrigation Blend

Option one involves blending the concentrate water in the evaporation ponds with irrigation water from Dave Rye. To determine the ratio of blending, suitable for plant life, blended samples need to be collected and analyzed at a lab. Initially, Olsson proposed collecting five samples for analysis. The first two samples would be the raw water while the remaining three samples would be a composite at the following blended ratios.

	Concentrate Water / Irrigation Water	
•	25%	75%
•	10%	90%
•	5%	95%

The samples would be sent to a local lab and analyzed for components which have adverse effects on plant life and soils. Attached in Appendix A is the Irrigation Water Quality Criteria by the *Colorado State University Extension*. The document outlines how irrigation water affects the soil and crops and highlights parameters to test for in irrigation water, such as pH, alkalinity, salinity, chloride, and sodium adsorption ratio. Based on the data in Appendix A, Colorado Analytical Lab was contacted for testing of the samples in order to determine costs. Table 1 shows the costs associated with collecting, testing, and analyzing the samples. Colorado Analytical Lab provides a standard nutrient analysis package for evaluating irrigation suitability and is included in Appendix B.

Table 1: Blend Sampling and Testing Costs

Item	Quantity	Unit	Unit Cost	Cost
Concentrate and Irrigation Blend				
Sample Collection and Analysis	1	LS	$ 750	$ 750
Sample Testing	5	EA	$ 85	$ 430
			Total Sampling Costs	$ 1,180

However, after discussions with the Colorado Department of Public Health and Environment (CDPHE) Water Quality Control Division (WQCD), blending the water for irrigation purposes is not a viable option.

Preliminary blending investigations were conducted during the summer of 2012 for permitting purposes and the CDPHE was contacted. During that time it was determined an individual National Pollutant Discharge Elimination System (NPDES) permit is required for use of blended water for irrigation purposes. The NPDES permit limits would be protective of groundwater and surface waters. Thus, the blended water would need to meet groundwater and surface water standards.

On April 23rd, 2013, Olsson performed a follow-up call to verify the information previously researched and to determine if anything had changed. At that time, it was confirmed an NPDES permit would be required, but the water could not be used for irrigation purposes, directly. The NPDES permit would cover the discharge of the blended RO concentrate to waters of the State. After which, it could be removed for irrigation purposes. The blended water would be required to meet both the basic ground water standards, *Regulation 41*, and surface water standards, *Regulation 38*. The surface water closest to the existing evaporation ponds is COSPMS05C, classified as Colorado Middle South Platte River stream segment 5c.

Total costs for this option were not reviewed at this time, but would include, permitting, yearly monitoring costs, capital costs, and legal and engineering fees and are not included at this time.

The next steps include collecting water samples to determine viability of blending and if determined viable, conducting a meeting with the WQCD to determine the preliminary effluent limits of the blended water.

Option 2. Dual Water System

Option two evaluates installing a dual water system in Greatrock North (GN) and Rocking Horse Farms (RHF) subdivisions. Currently, Box Elder Creek Ranch is the only subdivision with a dual water system, potable water is used for indoor use only and well water is used for irrigation and outdoor uses. Utilizing a dual water system will reduce the water demands on the existing GNWSD potable water system and thus decrease the amount of treated water needed and concentrate produced.

Table 2 shows the main costs associated with a dual water system. Items not included in this assessment and costs are the source water identification, water storage components, and water pumping facilities. Note since the source of the irrigation water is unknown at this time additional construction cost would be incurred for the piping from the source location to the subdivisions. Appendix C contains the exhibits which show the extents of the additional piping in each subdivision.

Table 2: Dual Water System

Item	Quantity	Unit	Unit Cost	Cost
Dual Irrigation				
8" PVC Main Line	35,000	LF	$ 40	$ 1,400,000
1" PVC Service Connections and Meters	225	EA	$ 1,450	$ 326,250
Remove and Replace Asphalt (assumed 4" thickness)	19,500	SY	$ 32	$ 624,000
Driveway Repair	225	EA	$ 400	$ 90,000
			Total Costs	$ 2,440,250

(This section intentionally left blank)

Option 3. Cease Reverse Osmosis (RO) Operations

Option three involves GNWSD ceasing RO operations at the plant located in Box Elder Creek Ranch subdivision and a onetime purchase of point of entry (POE) units for the residences.

Two local businesses, who install POE units, were contacted; Chuck the Water Man and Culligan. Based on conversations with Chuck the Water Man, a POE unit of 1,800 gallons per day (gpd) would be adequate for a family of six. The unit includes a cartridge RO filter, holding tank, Grundfos pump with VFD, a neutralizer, and a UV sterilizer to ensure the safety of the water. Appendix D contains the POE unit information for three different POE units to accommodate space restrictions in various homes. Table 3 provides a cost for a typical system. Annual operations and maintenance (O&M) cost were not provided.

Table 3: Chuck the Water Man POE Cost

Item	Quantity	Unit	Unit Cost	Cost
Cease RO				
Point of Entry Units and Installation (GN, RHF, BECR Filing 1-4)	545	EA	$ 12,000	$ 6,540,000

Based on discussions with Culligan, a POE unit was not recommended for multiple reasons including the lack of need to enhance the water quality of the toilet water or wash water and POE units typically are only 50% efficient resulting in a higher generation of concentrate. Culligan recommended point of use (POU) units. POU units are smaller RO units typically installed under sinks. Appendix E contains information from Culligan on their POE (E Series) and POU (Good Water Machine) units.
The E Series units are the smallest commercial RO Systems with production capacity from 250 gpd – 4,000 gpd. The price for the unit ranges from $2,400 - $6,150 each. A realistic number for a four person household would be in the $4,000 range. This only includes the RO system and does not include the items needed to complete the system such as water storage tank(s), distribution pump, tank level control systems, etc. It is assumed the additional items would add an additional $4,000. Table 4 provides costs for a Culligan POE unit. Annual O&M costs vary, but are approximately $450 per year, not including labor.

Table 4: Culligan POE Cost

Item	Quantity	Unit	Unit Cost	Cost
Cease RO- Culligan				
Point of Entry Units and Installation (GN, RHF, BECR Filing 1-4)	545	EA	$ 9,000	$ 4,905,000

The Culligan Good Water Machine are the ‘under sink’ units. Prices are typically $850 per unit installed, but with a large volume order the price can be reduced to $600 per unit, installed. Table 5 provides costs for a Culligan POU unit. Annual O&M costs are approximately $90 per year, not including labor. The Good Water Machine is the workhorse unit and carries a lifetime warranty to original purchaser.

Table 5: Culligan POU Cost

Item	Quantity	Unit	Unit Cost	Cost
Cease RO- Culligan				
Point of Use Units and Installation (GN, RHF, BECR Filing 1-4)	545	EA	$ 600	$ 327,000

Since the subdivisions within the GNWSD are all on septic systems, Olsson researched affects POE units have on septic systems. Discussions with both companies and initial research found no conclusive results showing a benefit or detriment to home septic systems. It was explained, there is an initial shock to a system as the incoming water parameters change, but the septic systems adjust.

Summary

A summary of the costs for the three options discussed is provided in Table 6.

Table 6: Summary of Costs for Options 1-3

Options		Cost
Option 1	Blend Sampling and Testing Costs	$ 1,180
Option 2	Dual Irrigation	$ 2,440,250
Option 3	Cease RO Operations	
	Chuck the Water Man POE Cost	$ 6,540,000
	Culligan POE Cost	$ 4,905,000
	Culligan POU Cost	$ 327,000

APPENDIX A

Colorado State University
Extension

Irrigation Water Quality Criteria

Fact Sheet No. 0.506 Crop Series | **Irrigation**

by T.A. Bauder, R.M. Waskom, P.L. Sutherland and J. G. Davis*

Salt-affected soils develop from a wide range of factors including: soil type, field slope and drainage, irrigation system type and management, fertilizer and manuring practices, and other soil and water management practices. In Colorado, perhaps the most critical factor in predicting, managing, and reducing salt-affected soils is the quality of irrigation water being used. Besides affecting crop yield and soil physical conditions, irrigation water quality can affect fertility needs, irrigation system performance and longevity, and how the water can be applied. Therefore, knowledge of irrigation water quality is critical to understanding what management changes are necessary for long-term productivity.

Corn plant damaged by saline sprinkler water.

*T.A. Bauder, Colorado State University Extension water quality specialist; R.M. Waskom, director, Colorado Water Institute; P.L. Sutherland, USDA/NRCS area resource conservationist; and J.G. Davis, Extension soils specialist and professor, soil and crop sciences. 5/2011

Irrigation Water Quality Criteria

Soil scientists use the following categories to describe irrigation water effects on crop production and soil quality:

- Salinity hazard - total soluble salt content
- Sodium hazard - relative proportion of sodium to calcium and magnesium ions
- pH - acid or basic
- Alkalinity - carbonate and bicarbonate
- Specific ions: chloride, sulfate, boron, and nitrate.

Another potential irrigation water quality impairment that may affect suitability for cropping systems is microbial pathogens.

Salinity Hazard

Table 1. General guidelines for salinity hazard of irrigation water based upon conductivity.

Limitations for use	Electrical Conductivity
	(dS/m)*
None	≤ 0.75
Some	0.76 - 1.5
Moderate[1]	1.51 - 3.00
Severe[2]	≥ 3.00

*dS/m at 25° C = mmhos/cm
[1]Leaching required at higher range.
[2]Good drainage needed and sensitive plants may have difficulty at germination.

The most influential water quality guideline on crop productivity is the water salinity hazard as measured by electrical conductivity (EC_w). The primary effect of high EC_w water on crop productivity is the inability of the plant to compete with ions in the soil solution for water (physiological drought). The higher the EC, the less water is available to plants, even though the soil may appear wet. Because plants can only transpire "pure" water, usable plant water in the soil solution decreases dramatically as EC increases.

Actual yield reductions from irrigating with high EC water varies substantially.

Quick Facts

- Knowledge of irrigation water quality is critical to understanding management for long-term productivity.
- Irrigation water quality is evaluated based upon total salt content, sodium and specific ion toxicities.
- In many areas of Colorado, irrigation water quality can influence crop productivity more than soil fertility, hybrid, weed control and other factors.

©Colorado State University Extension. 7/03. Revised 5/11.

www.ext.colostate.edu

Table 2. Potential yield reduction from saline water for selected irrigated crops.[1]

Crop	% yield reduction 0%	10%	25%	50%
	EC_w[2]			
Barley	5.3	6.7	8.7	12
Wheat	4.0	4.9	6.4	8.7
Sugarbeet[3]	4.7	5.8	7.5	10
Alfalfa	1.3	2.2	3.6	5.9
Potato	1.1	1.7	2.5	3.9
Corn (grain)	1.1	1.7	2.5	3.9
Corn (silage)	1.2	2.1	3.5	5.7
Onion	0.8	1.2	1.8	2.9
Dry Beans	0.7	1.0	1.5	2.4

[1]Adapted from "Quality of Water for Irrigation." R.S. Ayers. Jour. of the Irrig. and Drain. Div., ASCE. Vol 103, No. IR2, June 1977, p. 140.
[2]EC_w = electrical conductivity of the irrigation water in dS/m at 25°C.
[3]Sensitive during germination. EC_w should not exceed 3 dS/m for garden beets and sugarbeets.

Table 3. Conversion factors for irrigation water quality laboratory reports.

Component	To Convert	Multiply By	To Obtain
Water nutrient or TDS	mg/L	1.0	ppm
Water salinity hazard	1dS/m	1.0	1mmho/cm
Water salinity hazard	1mmho/cm	1,000	1 μmho/cm
Water salinity hazard	EC_w (dS/m) for EC <5 dS/m	640	TDS (mg/L)
Water salinity hazard	EC_w (dS/m) for EC >5 dS/m	800	TDS (mg/L)
Water NO_3N, SO_4-S, B applied	ppm	0.23	lb per acre inch of water
Irrigation water	acre inch	27,150	gallons of water

Table 4. Guidelines for assessment of sodium hazard of irrigation water based on SAR and EC_w[2].

Irrigation water SAR	Potential for Water Infiltration Problem: Unlikely	Likely
	----------EC_w[2] (dS/m)----------	
0-3	> 0.7	< 0.2
3-6	> 1.2	< 0.4
6-12	> 1.9	< 0.5
12-20	> 2.9	< 1.0
20-40	> 5.0	< 3.0

[2]Modified from R.S. Ayers and D.W. Westcot. 1994. Water Quality for Agriculture, Irrigation and Drainage Paper 29, rev. 1, Food and Agriculture Organization of the United Nations, Rome.

Table 5. Susceptibility ranges for crops to foliar injury from saline sprinkler water.

	Na or Cl concentration (mg/L) causing foliar injury			
Na concentration	<46	46-230	231-460	>460
Cl concentration	<175	175-350	351-700	>700
	Apricot	Pepper	Alfalfa	Sugarbeet
	Plum	Potato	Barley	Sunflower
	Tomato	Corn	Sorghum	

Foliar injury is influenced by cultural and environmental conditions. These data are presented only as general guidelines for daytime irrigation. Source: Mass (1990) Crop salt tolerance. In: Agricultural Assessment and Management Manual. K.K. Tanji (ed.). ASCE, New York. pp. 262-304.

Definitions

Abbrev.	Meaning
mg/L	milligrams per liter
meq/L	milliequivalents per liter
ppm	parts per million
dS/m	deciSiemens per meter
μS/cm	microSiemens per centimeter
mmho/cm	millimhos per centimeter
TDS	total dissolved solids

Factors influencing yield reductions include soil type, drainage, salt type, irrigation system and management.

The amount of water transpired through a crop is directly related to yield; therefore, irrigation water with high EC_w reduces yield potential (Table 2). Beyond effects on the immediate crop is the long term impact of salt loading through the irrigation water. Water with an EC_w of 1.15 dS/m contains approximately 2,000 pounds of salt for every acre foot of water. You can use conversion factors in Table 3 to make this calculation for other water EC levels.

Other terms that laboratories and literature sources use to report salinity hazard are: salts, salinity, electrical conductivity (EC_w), or total dissolved solids (TDS). These terms are all comparable and all quantify the amount of dissolved "salts" (or ions, charged particles) in a water sample. However, TDS is a direct measurement of dissolved ions and EC is an indirect measurement of ions by an electrode.

Although people frequently confuse the term "salinity" with common table salt or sodium chloride (NaCl), EC measures salinity from all the ions dissolved in a sample. This includes negatively charged ions (e.g., Cl^-, NO^-_3) and positively charged ions (e.g., Ca^{++}, Na^+). Another common source of confusion is the variety of unit systems used with EC_w. The preferred unit is deciSiemens per meter (dS/m), however millimhos per centimeter (mmho/cm) and micromhos per centimeter (µmho/cm) are still frequently used. Conversions to help you change between unit systems are provided in Table 3.

Sodium Hazard

Infiltration/Permeability Problems

Although plant growth is primarily limited by the salinity (EC_w) level of the irrigation water, the application of water with a sodium imbalance can further reduce yield under certain soil texture conditions. Reductions in water infiltration can occur when irrigation water contains high sodium relative to the calcium and magnesium contents. This condition, termed "sodicity," results from excessive soil accumulation of sodium. Sodic water is not the same as saline water. Sodicity causes swelling and dispersion of soil clays, surface crusting and pore plugging. This degraded soil structure condition in turn obstructs infiltration and may increase runoff. Sodicity causes a decrease in the downward movement of water into and through the soil, and actively growing plants roots may not get adequate water, despite pooling of water on the soil surface after irrigation.

The most common measure to assess sodicity in water and soil is called the Sodium Adsorption Ratio (SAR). The SAR defines sodicity in terms of the relative concentration of sodium (Na) compared to the sum of calcium (Ca) and magnesium (Mg) ions in a sample. The SAR assesses the potential for infiltration problems due to a sodium imbalance in irrigation water. The SAR is mathematically written below, where

$$SAR = \frac{Na^{+}\ \text{meq/L}}{\sqrt{\frac{(Ca^{++}\ \text{meq/L}) + (Mg^{++}\ \text{meq/L})}{2}}}$$

meq/L = mg/L divided by atomic weight of ion divided by ionic charge (Na^{+}=23.0 mg/meq, Ca^{++}=20.0 mg/meq, Mg^{++}=12.15 mg/meq)

Na, Ca and Mg are the concentrations of these ions in milliequivalents per liter (meq/L). Concentrations of these ions in water samples are typically provided in milligrams per liter (mg/L). To convert Na, Ca, and Mg from mg/L to meq/L, you should divide the concentration by 22.9, 20, and 12.15 respectively.

For most irrigation waters encountered in Colorado the standard SAR formula provided above is suitable to express the potential sodium hazard. However, for irrigation water with high bicarbonate (HCO_3) content, an "adjusted" SAR (SAR_{ADJ}) can be calculated. In this case, the amount of calcium is adjusted for the water's alkalinity, is recommended in place of the standard SAR (see pH and Alkalinity section below). Your laboratory may calculate an adjusted SAR in situations where the HCO_3 is greater than 200 mg/L or pH is greater than 8.5.

The potential soil infiltration and permeability problems created from applications of irrigation water with high "sodicity" cannot be adequately assessed on the basis of the SAR alone. This is because the swelling potential of low salinity (EC_w) water is greater than high EC_w waters at the same sodium content (Table 4). Therefore, a more accurate evaluation of the infiltration/permeability hazard requires using the electrical conductivity (EC_w) together with the SAR.

Many factors including soil texture, organic matter, cropping system, irrigation system and management affect how sodium in irrigation water affects soils. Soils most likely to show reduced infiltration and crusting from water with elevated SAR (greater than 6) are those containing more than 30% expansive (smectite) clay. Soils containing more than 30% clay include most soils in the clay loam, silty clay loam textural classes and finer and some sandy clay loams. In Colorado, smectite clays are common in areas with agricultural production.

pH and Alkalinity

The acidity or basicity of irrigation water is expressed as pH (< 7.0 acidic; > 7.0 basic). The normal pH range for irrigation water is from 6.5 to 8.4. Abnormally low pH's are not common in Colorado, but may cause accelerated irrigation system corrosion where they occur. High pH's above 8.5 are often caused by high bicarbonate (HCO_3^-) and carbonate (CO_3^{2-}) concentrations, known as alkalinity. High carbonates cause calcium and magnesium ions to form insoluble minerals leaving sodium as the dominant ion in solution. As described in the sodium hazard section, this alkaline water could intensify the impact of high SAR water on sodic soil conditions. Excessive bicarbonate concentrates can also be problematic for drip or micro-spray irrigation systems when calcite or scale build up causes reduced flow rates through orifices or emitters. In these situations, correction by injecting sulfuric or other acidic materials into the system may be required.

Chloride

Chloride is a common ion in Colorado irrigation waters. Although chloride is essential to plants in very low amounts, it can cause toxicity to sensitive crops at high concentrations (Table 6). Like sodium, high chloride concentrations cause more problems when applied with sprinkler irrigation (Table 6). Leaf burn under sprinkler from both sodium and chloride can be reduced by night time irrigation or application on cool, cloudy days. Drop nozzles and drag hoses are also recommended when applying any saline irrigation water through a sprinkler system to avoid direct contact with leaf surfaces.

Table 6. Chloride classification of irrigation water.

Chloride (ppm)	Effect on Crops
Below 70	Generally safe for all plants.
70-140	Sensitive plants show injury.
141-350	Moderately tolerant plants show injury.
Above 350	Can cause severe problems.

Chloride tolerance of selected crops. Listing in order of increasing tolerance: (low tolerance) dry bean, onion, carrot, lettuce, pepper, corn, potato, alfalfa, sudangrass, zucchini squash, wheat, sorghum, sugar beet, barley (high tolerance). Source: Mass (1990) Crop Salt Tolerance. *Agricultural Salinity Assessment and Management Manual*. K.K. Tanji (ed.). ASCE, New York. pp 262-304.

Boron

Boron is another element that is essential in low amounts, but toxic at higher concentrations (Table 7). In fact, toxicity can occur on sensitive crops at concentrations less than 1.0 ppm. Colorado soils and irrigation waters contain enough B that additional B fertilizer is not required in most situations. Because B toxicity can occur at such low concentrations, an irrigation water analysis is advised for groundwater before applying additional B to crops.

Sulfate

The sulfate ion is a major contributor to salinity in many of Colorado irrigation waters. As with boron, sulfate in irrigation

Table 7. Boron sensitivity of selected Colorado plants (B concentration, mg/ L*)

Sensitive		Moderately Sensitive	Moderately Tolerant	Tolerant
0.5-0.75	0.76-1.0	1.1-2.0	2.1-4.0	4.1-6.0
Peach	Wheat	Carrot	Lettuce	Alfalfa
Onion	Barley	Potato	Cabbage	Sugar beet
	Sunflower	Cucumber	Corn	Tomato
	Dry Bean		Oats	

Source: Mass (1987) Salt tolerance of plants. *CRC Handbook of Plant Science in Agriculture*. B.R. Cristie (ed.). CRC Press Inc.
*Maximum concentrations tolerated in soil water or saturation extract without yield or vegetative growth reductions. Maximum concentrations in the irrigation water are approximately equal to these values or slightly less.

water has fertility benefits, and irrigation water in Colorado often has enough sulfate for maximum production for most crops. Exceptions are sandy fields with <1 percent organic matter and <10 ppm SO_4-S in irrigation water.

Nitrogen

Nitrogen in irrigation water (N) is largely a fertility issue, and nitrate-nitrogen (NO_3-N) can be a significant N source in the South Platte, San Luis Valley, and parts of the Arkansas River basins. The nitrate ion often occurs at higher concentrations than ammonium in irrigation water. Waters high in N can cause quality problems in crops such as barley and sugar beets and excessive vegetative growth in some vegetables. However, these problems can usually be overcome by good fertilizer and irrigation management. Regardless of the crop, nitrate should be credited toward the fertilizer rate especially when the concentration exceeds 10 ppm NO_3-N (45 ppm NO^-_3). Table 3 provides conversions from ppm to pounds per acre inch.

Summary

The quality of irrigation water available to farmers and other irrigators has a considerable impact on what plants can be successfully grown, the productivity of these plants, and water infiltration and other soil physical conditions. The first step in understanding how an irrigation water source can affect a soil-plant system is to have it analyzed by a reputable lab. The Colorado State University Extension factsheet, Selecting an Analytical Laboratory 0.520 can help you locate a lab in your area that is familiar with irrigation water quality. Additional information on understanding and managing for saline and sodic conditions is found in Colorado State University factsheets, Managing Saline Soils 0.503 and Managing Sodic Soils 0.504.

Colorado State University, U.S. Department of Agriculture and Colorado counties cooperating. CSU Extension programs are available to all without discrimination. No endorsement of products mentioned is intended nor is criticism implied of products not mentioned.

APPENDIX B

Colorado Analytical Laboratories, Inc.

2012
2013

FEE SCHEDULE

Water Analysis Test Packages

Domestic Water Quality
Alkalinity (Incl. Carbonate & Bicarbonate)
Calcium
Chloride
Fluoride
Iron
Magnesium
Nitrate
pH
Sodium Adsorption Ratio
Sodium
Sulfate
Total Dissolved Solids
Total Hardness
Price Per Sample $80.00
Price Per Sample (Incl. Total Coliform PA) $103.00

Standard Nutrient Analysis Evaluation for Irrigation Suitability
Alkalinity (Incl. Carbonate & Bicarbonate)
Ammonia
Boron
Calcium
Chloride
Copper
Iron
Magnesium
Nitrate
pH
Phosphate
Potassium
Salinity (Electrical Conductivity)
Sodium
Sodium Adsorption Ratio
Price Per Sample $85.00

Complete Nutrient Analysis Evaluation for Irrigation Suitability
Alkalinity (Incl. Carbonate & Bicarbonate)
Ammonia
Boron
Calcium
Chloride
Copper
Iron
Magnesium
Manganese
Molybdenum
Nitrate
pH
Phosphate
Potassium
Salinity (Electrical Conductivity)
Sodium
Sodium Adsorption Ratio
Sulfate
Zinc
Price Per Sample $105.00

APPENDIX C

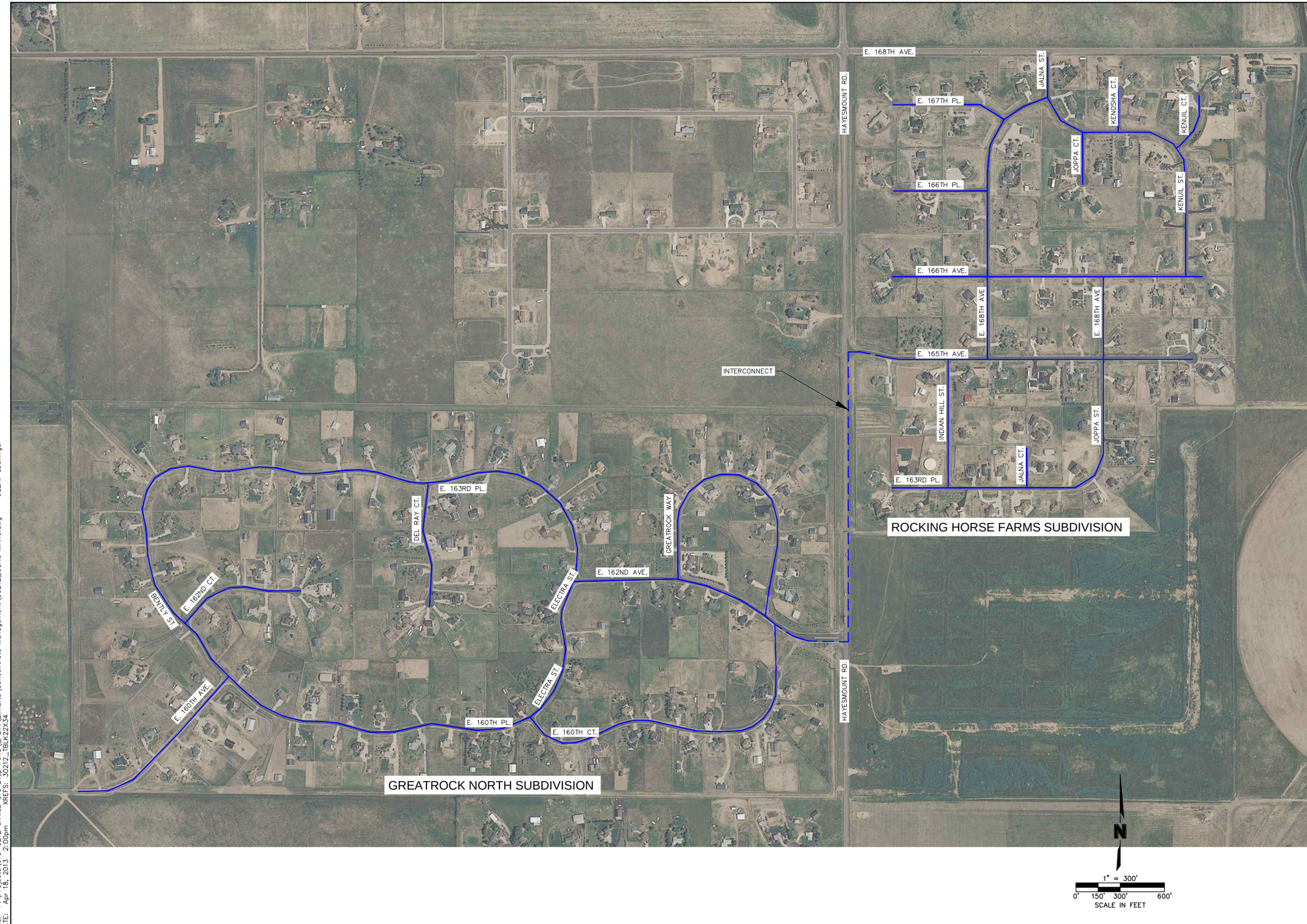

OLSSON ASSOCIATES
4690 Table Mountain Drive, Suite 200
Golden, CO 80403
TEL 303.237.2072
FAX 303.237.2659
www.oacconsulting.com

NOTE
THIS DOCUMENT HAS BEEN RELEASED BY OLSSON ASSOCIATES ONLY FOR REVIEW BY REGULATORY AGENCIES AND OTHER PROFESSIONALS, AND IS SUBJECT TO CHANGE. THIS DOCUMENT IS NOT TO BE USED FOR CONSTRUCTION.

OLSSON ASSOCIATES ASSUMES NO RESPONSIBILITY FOR EXISTING UTILITY LOCATIONS (HORIZONTAL OR VERTICAL). THE EXISTING UTILITIES SHOWN ON THIS DRAWING HAVE BEEN PLOTTED FROM THE BEST AVAILABLE INFORMATION. IT IS HOWEVER THE RESPONSIBILITY OF THE CONTRACTOR TO FIELD VERIFY THE LOCATION OF ALL UTILITIES PRIOR TO THE COMMENCEMENT OF ANY CONSTRUCTION ACTIVITIES.

REV. NO.	DATE	REVISIONS DESCRIPTION

REVISIONS

GREATROCK NORTH AND
ROCKING HORSE FAMRS SUBDIVISION

GREATROCK NORTH W&S DISTRICT
DUAL IRRIGATION CONCEPTUAL LAYOUT

ADAMS COUNTY, COLORADO

2013

drawn by:	ALB
checked by:	JC
approved by:	JC
QA/QC by:	BAS
project no.:	013-0212
drawing no.:	30212_CONC MANG
date:	04.18.2013

SHEET
1 of 1

DWG: F:\Projects\013-0212 GNWSD 3rd Evap Pond_PBIN\Exhibits\Concentrate Management\30212_CONC MANG.dwg USER: abollinger
DATE: Apr 18, 2013 2:00pm XREFS: 30212_TBLK22X34

APPENDIX D

AXEON WATER TECHNOLOGIES

FLEXEON BT-1800 Commercial Tap 1,800 GPD RO Systems

FLEXEON BT-Series Reverse Osmosis (RO) Systems are designed and manufactured for commercial and light industrial applications. These systems have been engineered for capacities ranging from 1,500, 1,800 and 2,000 gallons per day and for municipal and well water supplies. FLEXEON BT-Series RO Systems come pre-assembled, fully tested, preserved and sanitized and only require simple utility connections once on site. Systems come ready for immediate on-line service, minimal set up and with little adjustment required. The simple, high quality and proven design of FLEXEON BT-Series RO Systems have made these systems become known as turn-key, cost effective and reliable water purification systems.

FLEXEON BT-Series Reverse Osmosis Systems are designed for overall high performance, high recovery rates, minimal energy consumption and offer great savings with low maintenance and operation costs. These systems feature a space saving expandable design, exceptional pre-filtration, quality components and allow for many options and upgrades to suit most applications. The major components of the FLEXEON BT-Series Reverse Osmosis Systems are supported by a rigid aluminum frame and designed in such a way to provide ease of access for servicing, maintenance, and monitoring performance.

Benefits

- Fully Equipped, Customizable and Economical
- Expandable and Lightweight Design
- Compact Space Saving Design
- Components Easily Accessible
- Pre-Plumbed, Wired and Assembled - Turn Key
- Factory Tested and Preserved
- Low Operation Costs
- Low Maintenance Costs
- Easy Maintenance and Servicing
- Integrated Pre-Filtration
- Lightweight and Non-Corrosive Aluminum Frame
- AXEON Components
- Numerous Options and Upgrades to Suit Most Applications

- CE Compliant
- 1-Year Limited Warranty
- Made in the U.S.A.

AXEON Value Added

- 5-Star Technical and Customer Support Before and After the Sale
- Full Documentation Provided With Every System Manufactured
- Readily Available Replacement Parts
- One-On-One Applications Engineering Consultation

Features

40980 County Center Drive, Suite 100, Temecula, CA 92591
P: 800-320-4074 • F: 800-609-0829 • E: sales@axeonwater.com • W: www.axeonwater.com

System Packages: STANDARD (S) ADVANCED (A) PREMIER (P)

White Powder Coated Aluminum Frame (S) (A) (P)

Corrosion resistant and light weight

Manual On and Off Control Switch (S)

Allows for on and off control of the RO system

Minitrol Computer Controller (A)

Provides a 20 amp output relay for the RO pump and inlet solenoid, and monitors switch inputs from a pressure switch. these inputs allow the RO unit to either run or shutdown as necessary for proper operation. tank level and pre-treatment inputs control the ro system

Minitrol IF Computer Controller (P)

Provides a 20 amp output relay for the RO pump and inlet solenoid, and monitors switch inputs from a pressure switch. these inputs allow the RO unit to either run or shutdown as necessary for proper operation. tank level and pre-treatment inputs control the ro system along with a optional flush cycle

Pre-Treatment Lockout (A) (P)

Sends a signal to the RO system when a pre-treatment lockout condition occurs

Tank Level Input (A) (P)

Sends a signal to the RO system when a tank full or tank low condition occurs

LED Controller Display (A) (P)

Displays a digital readout for RO system monitoring

Feed Solenoid Valve with Manual Bypass (S) (A) (P)

High flow, low friction loss design that has a pressure range of 10 to 125 psi, offers a manual override handle for valve actuation

AXEON Concentrate Recycle Valve (A) (P)

Needle valve controls the waste water being recycled back through the RO system

Feed Low Pressure Switch 15-30 psi (S) (A) (P)

Protects the RO pump from damage and cavitation when a low pressure condition occurs

AXEON Permeate Flow Meter (S) (A) (P)

Monitors the product water flow rate

AXEON Concentrate Flow Meter (S) (A) (P)

Monitors the waste water flow rate

AXEON Concentrate Recycle Flow Meter (A) (P)

Monitors the waste water flow rate being recycled back through the RO system

316 Stainless Steel Concentrate Valve (S) (A) (P)

Needle valve allows for control of the waste water

AXEON 0-100 psi Pre-Filter In Pressure Gauge (S) (A) (P)

Monitors the feed water pressure entering the pre-filters

AXEON 0-100 psi Pre-Filter Out Pressure Gauge (S) (A) (P)

Monitors the outlet water pressure exiting the pre-filters

AXEON 0-300 psi Pump Pressure Gauge (S) (A) (P)

Monitors the pump discharge pressure

PS-100 Permeate TDS Controller (A)

Allows for product water monitoring with a digital display readout

PS-200 Dual Permeate and Feed TDS Controller (P)

Allows for product and feed water monitoring with a digital display readout

Feed Flush (P)

Low flow feed water flush to reduce concentrated water on the RO membrane element

AXEON 5 Micron Sediment Pre-Filter (S) (A) (P)

Reduces the amount of sediment from the feed water source

AXEON 10 Micron Carbon Block Pre-Filter (S) (A) (P)

Reduces the amount of chlorine from the feed water source

Double O-Ring Filter Housings (S) (A) (P)

Offer durability and improved sealing capabilities

AXEON HF1 Low Energy RO Membranes (S)

Deliver high quality product water at moderately low pressure operation

AXEON HF4 Extra Low Energy RO Membranes (A) (P)

Operate at less than half the operating pressure of standard high rejection membranes

AXEON PVC Membrane Housings (S) (A) (P)

Feature a convenient side port entry, an easy-to-remove snap ring and a removable end cap

1001 Brass Rotary Vane Pump (S) (A)

High volume rotary vane pump built for durability and continuous duty

1011 Stainless Steel Rotary Vane Pump (P)

High volume rotary vane pump built for durability and corrosion resistance

ODP Carbonator Motor (S) (A) (P)

110v / 220v, 50hz / 60hz motor for continuous runtime

*__NOTE:__ All 50Hz systems come standard with AXEON HF4 Extra Low Energy RO Membranes.

*__NOTE__: BT-1800 RO Systems come standard with the Concentrate Recycle Valve and Flow Meter options in order to achieve a higher recovery rate.

Options

S150 Computer Controller with Feed Flush

Allows for pre-treat lockout functionality, tank level input, permeate TDS monitoring, low pressure monitoring, feed flush, electronic flush bypass and features a convenient LED display, alarm functionality and other monitoring options

High Pressure Tank Switch

Automatically turns off the ro system at a pre-determined storage tank pressure

Chemical Pump Outlet

Provides an integrated power source with the RO system for connection of a chemical feed pump

Blending Valve

Allows for a mixture of feed water into the final reverse osmosis product water to achieve a fine-tuned product tds

Permeate Flush with Pressure Tank

Product water feed flush to reduce concentrated water on the ro membrane element with the use of a bladder tank

Permeate Flush with Atmospheric Tank

Product water feed flush to reduce concentrated water on the RO membrane element with the use of a atmospheric tank

Permeate Flush with Mechanical Float

Product water feed flush to reduce concentrated water on the RO membrane element with the use of a mechanical float

PSC-150 TDS/Conductivity Controller

Allows for the monitoring of the reverse osmosis product water tds and conductivity levels; useful in evaluating overall system performance

Permeate Sample Ports

Allows for evaluation of individual membrane performance and aids in system troubleshooting and maintenance

AXEON NF3 Nanofiltration Membranes

Operate at a low nominal 70 psi with a 40-50% salt rejection

AXEON NF4 Nanofiltration Membranes

Operate at a low nominal 70 psi with a 80-90% salt rejection

AXEON Stainless Steel Housings

304 stainless steel design that withstands various climate conditions and industrial use

Single Wood Crate

Added protection around the RO system during shipment

Voltage Option 1: 220V, 60Hz, 1PH, 5.6A

Voltage Option 2: 220V, 50Hz, 1PH, 6.6A

Specifications

Naming Matrix

- **B** = Frame Style
- **T** = Feed Water Type - Tap Water (T), Brackish Water (B), Sea Water (S)
- **XXXX** = Rated Production in Gallons Per Day Based on Standard Test Conditions
- **S, A, P** = System Package Identifiers

FLEXEON BT-Series	Standard (S)	Advanced (A)	Premier (P)
FLEXEON BT-1500	BT-1500S	BT-1500A	BT-1500P
FLEXEON BT-1800	BT-1800S	BT-1800A	BT-1800P
FLEXEON BT-2000	BT-2000S	BT-2000A	BT-2000P

Configuration: Single Pass

Feed Water Source*:** TDS <2000 ppm

Standard Recovery Rate: 30%

Recovery with Concentrate Recycle: Up to 75%

Nominal Salt Rejection: 98.5%

Permeate Flow* gpm (lpm): 1.25 (4.73)

Minimum Feed Flow gpm (lpm): 4.25 (16.10)

Maximum Feed Flow gpm (lpm): 14.00 (53.00)

Minimum Concentrate Flow gpm (lpm): 3.00 (11.36)

Feed inch: 1 " FNPT

Permeate inch: 3/8" Tube

Concentrate inch: 3/8" Tube

Membrane(s) Per Vessel: 1

Membrane Quantity: 1

Membrane Size: 4040

Vessel Array: 1

Vessel Quantity: 1

Pump Type: Rotary Vane 1001 Brass or 1011 SS

Motor HP: 3/4

RPM @ 60 (50Hz): 1725 (1465)

Standard Voltage: 110V, 60Hz, 1 PH, 11.0A

L x W x H inch (cm): 19 x 23 x 46 (48 x 58 x 116)

Weight lb. (kg): 105 (47.63)

* Product flow rates and recovery are based on equipment test parameters.

** Does not include operating space requirements.

*** Treatment ability of the RO system is dependent on feed water quality. Performance projections must be run for each installation.

† Low temperatures and high feed TDS will significantly affect the systems production capabilities. Computer projections should be run for individual applications which do not meet or exceed minimum and maximum operating limits.

Part Numbers

Systems

Part Number:	Description:
200032	SYSTEM, RO, BT-1800S, STANDARD, 110V 60HZ 1PH, FLEXEON
204329	SYSTEM, RO, BT-1800S, STANDARD, 220V 60HZ 1PH, FLEXEON
204330	SYSTEM, RO, BT-1800S, STANDARD, 220V 50HZ 1PH, FLEXEON
203937	SYSTEM, RO, BT-1800A, ADVANCED, 110V 50/60HZ 1PH, FLEXEON
203963	SYSTEM, RO, BT-1800A, ADVANCED, 220V 50/60HZ 1PH, FLEXEON
203945	SYSTEM, RO, BT-1800P, PREMIER, 110V 50/60HZ 1PH, FLEXEON
203973	SYSTEM, RO, BT-1800P, PREMIER, 220V 50/60HZ 1PH, FLEXEON

Options & Upgrades

Part Number:	Description:
204371	SYSTEM, RO, BT-1800, CONTROLLER, 110V 60HZ 1PH, MINITROL
204332	SYSTEM, RO, BT-1800, CONTROLLER, 220V 60HZ 1PH, MINITROL
204830	SYSTEM, RO, BT-1800, CONTROLLER, 220V 50HZ 1PH, MINITROL
204372	SYSTEM, RO, BT-1800, CONTROLLER, FEED FLUSH, 110V 60HZ 1PH, MINITROL IF
204333	SYSTEM, RO, BT-1800, CONTROLLER, FEED FLUSH, 220V 60HZ 1PH, MINITROL IF
204832	SYSTEM, RO, BT-1800, CONTROLLER, FEED FLUSH, 220V 50HZ 1PH, MINITROL IF
203676	SYSTEM, RO, BT-1800, CONTROLLER, FEED FLUSH, 110V 60HZ 1PH, S150
204834	SYSTEM, RO, BT-1800, CONTROLLER, FEED FLUSH, 220V 60HZ 1PH, S150
204835	SYSTEM, RO, BT-1800, CONTROLLER, FEED FLUSH, 220V 50HZ 1PH, S150
204373	SYSTEM, RO, BT-1800, OUTLET, PUMP, CHEMICAL, 110V 60HZ 1PH
204334	SYSTEM, RO, BT-1800, OUTLET, PUMP, CHEMICAL, 220V 60HZ 1PH
204837	SYSTEM, RO, BT-1800, OUTLET, PUMP, CHEMICAL, 220V 50HZ 1PH
204370	SYSTEM, RO, BT-1800, SWITCH, TANK, PRESSURE, HIGH, 110V 60HZ 1PH
204331	SYSTEM, RO, BT-1800, SWITCH, TANK, PRESSURE, HIGH, 220V 60HZ 1PH
204839	SYSTEM, RO, BT-1800, SWITCH, TANK, PRESSURE, HIGH, 220V 50HZ 1PH
204374	SYSTEM, RO, BT-1800, PERMEATE FLUSH, TANK, PRESSURE, 110V 60HZ 1PH
204335	SYSTEM, RO, BT-1800, PERMEATE FLUSH, TANK, PRESSURE, 220V 60HZ 1PH
204841	SYSTEM, RO, BT-1800, PERMEATE FLUSH, TANK, PRESSURE, 220V 50HZ 1PH
204375	SYSTEM, RO, BT-1800, PERMEATE FLUSH, TANK, ATMOSPHERIC, 110V 60HZ 1PH
204336	SYSTEM, RO, BT-1800, PERMEATE FLUSH, TANK, ATMOSPHERIC, 220V 60HZ 1PH
204843	SYSTEM, RO, BT-1800, PERMEATE FLUSH, TANK, ATMOSPHERIC, 220V 50HZ 1PH
204376	SYSTEM, RO, BT-1800, PERMEATE FLUSH, FLOAT, MECHANICAL, 110V 60HZ 1PH
204337	SYSTEM, RO, BT-1800, PERMEATE FLUSH, FLOAT, MECHANICAL, 220V 60HZ 1PH
204845	SYSTEM, RO, BT-1800, PERMEATE FLUSH, FLOAT, MECHANICAL, 220V 50HZ 1PH
202122	SYSTEM, RO, BT-1800, MEMBRANE, HF4 - 4040, AXEON
202123	SYSTEM, RO, BT-1800, MEMBRANE, HF5 - 4040, AXEON
202124	SYSTEM, RO, BT-1800, MEMBRANE, NF3 - 4040, AXEON
202125	SYSTEM, RO, BT-1800, MEMBRANE, NF4 - 4040, AXEON
202127	SYSTEM, RO, BT-1800, VESSEL, PRESSURE, SS, 4040
202128	SYSTEM, RO, BT-1800, VESSEL, PRESSURE, FRP, 4040
205909	SYSTEM, RO, BT-1800, HOUSING, FILTER, #20, BLUE, 1" FNPT, PENTEK
202580	SYSTEM, RO, BT-1800, CONTROLLER, TDS, PS-100, HM DIGITAL
202581	SYSTEM, RO, BT-1800, CONTROLLER, TDS, DUAL, PS-200, HM DIGITAL

202582	SYSTEM, RO, BT-1800, CONTROLLER, TDS/CONDUCTIVITY, PSC-150, HM DIGITAL
202130	SYSTEM, RO, BT-1800, PUMP, SS, 1011, FLUID-O-TECH
202594	SYSTEM, RO, BT-1800, PORTS, SAMPLE, PERMEATE
202589	SYSTEM, RO, BT-1800, VALVE, BLENDING
202596	SYSTEM, RO, BT-1800, CRATE, WOOD, SINGLE

Images

40980 County Center Drive, Suite 100, Temecula, CA 92591
P: 800-320-4074 • **F:** 800-609-0829 • **E:** sales@axeonwater.com • **W:** www.axeonwater.com

AXEON
WATER TECHNOLOGIES

AXEON R1-1140 Commercial Tap Water 1,500 GPD RO Systems

AXEON R1-Series Reverse Osmosis (RO) Systems are designed and manufactured for commercial and light industrial applications. These systems have been engineered for capacities ranging from 1,500 - 9,000 gallons per day and for municipal and well water supplies. AXEON R1-Series RO Systems come pre-assembled, fully tested, preserved and sanitized and only require simple utility connections once on site. Systems come ready for immediate on-line service, minimal set up and with little adjustment required. The simple, high quality and proven design of AXEON R1-Series RO Systems have made these systems become known as turn-key, cost effective and reliable water purification systems.

AXEON R1-Series Reverse Osmosis Systems feature a new, innovative and expandable design. These systems feature only the highest quality components, including a programmable computer controller with many built-in standard features, a stainless steel booster pump for high performance and corrosion resistance, extra low energy membranes and fiberglass membrane housings for enhanced performance and durability. The major components of the AXEON R1-Series Reverse Osmosis Systems are supported by a rigid aluminum frame and designed in such a way to provide ease of access for servicing, maintenance, and monitoring performance.

Benefits

- Fully Equipped, Customizable and Economical
- Expandable and Lightweight Design
- Decreased Size of Dimensional Footprint
- Components Easily Accessible
- Pre-Plumbed, Wired and Assembled - Turn Key
- Factory Tested and Preserved
- Low Operation Costs
- Low Maintenance Costs
- Easy Maintenance and Servicing
- Integrated Pre-Filtration
- Lightweight and Non-Corrosive Aluminum Frame
- AXEON Components
- Numerous Options and Upgrades to Suit Most Applications
- CE Compliant
- 1-Year Limited Warranty
- Made in the U.S.A.

Features

White Powder Coated Aluminum Frame

Corrosion resistant and light weight

40980 County Center Drive, Suite 100, Temecula, CA 92591
P: 800-320-4074 • F: 800-609-0829 • E: sales@axeonwater.com • W: www.axeonwater.com

C22 Computer Controller with Feed Flush

Allows for pre-treat lockout functionality, tank level input, permeate TDS monitoring, low pressure monitoring, feed flush, electronic push button flush bypass and features a convenient LED display and alarm functionality

AXEON Permeate Flow Meter

Monitors the product water flow rate

AXEON Concentrate Flow Meter

Monitors the waste water flow rate

AXEON Concentrate Recycle Flow Meter

Monitors the waste water flow rate being recycled back through the ro system

AXEON 0-100 psi Pre-Filter In Pressure Gauge

Monitors the feed water pressure entering the pre-filters

AXEON 0-100 psi Pre-Filter Out Pressure Gauge

Monitors the outlet water pressure exiting the pre-filters

AXEON 0-300 psi Pump Pressure Gauge

Monitors the pump discharge pressure

AXEON 0-300 psi Concentrate Pressure Gauge

Monitors the waste water discharge pressure

AXEON 5 Micron Sediment Pre-Filter

Reduces the amount of sediment from the feed water source

Pentek® Single O-Ring Filter Housing

Heavy duty, easy to maintain, long lasting and corrosion resistant

AXEON HF4 Extra Low Energy Membrane Elements

Operate at less than half the operating pressure of standard membranes

AXEON Fiberglass Membrane Housings

Higher resistance to varying feed water conditions and chemicals

Permeate Sample Ports

Allows for evaluation of individual membrane performance and aids in system troubleshooting and maintenance

Goulds® Multi-Stage Stainless Steel Booster Pump

High pressure pump provides steady, quiet, vibration-free operation and is designed for continuous operation. High resistance to corrosion and abrasion

ASCO® Feed Solenoid Valve

Solenoid valve features a high flow and low friction loss

Feed Low Pressure Switch

Protects the RO pump from damage and cavitation when a low pressure condition occurs

John Guest and Sea-Tech Push and Pull Fittings with Locking Safety Clips

Durable, long lasting, easy to use and corrosion resistant fittings

Options

S150 Computer Controller

Allows for pre-treat lockout functionality, tank level input, permeate TDS monitoring, low pressure monitoring, feed flush, electronic flush bypass and features a convenient LED display, alarm functionality and other monitoring options

S150 Expander Board

I/O expander board allows for 2 additional relay outputs and 1 additional switch input

S150 Dual TDS Board and Sensor

Allows for the monitoring of the feed water TDS

AXEON HF5 Ultra Low Energy Membrane Elements

Operate at a low nominal 80 psi with a 98.5% salt rejection

AXEON NF3 Nanofiltration Membrane Elements

Operate at a low nominal 70 psi with a 40-50% salt rejection

AXEON NF4 Nanofiltration Membrane Elements

Operate at a low nominal 70 psi with a 80-90% salt rejection

Filmtec® LCLE Membrane Elements

Deliver high-quality water at 99.7% salt rejection water at low operating pressures

Filmtec® LCHR Membrane Elements

Deliver high-quality water at 99.7% salt rejection water

AXEON Stainless Steel Membrane Housings

304 stainless steel design that withstands various climate conditions and industrial use

Hanna® BL 982411 ORP Controller

Allows for monitoring of ORP in the feed water

Hanna® BL 981411 pH Controller

Allows for monitoring of pH in the product water

Chemical Pump Outlet

Provides an integrated power source with the RO system for connection of a chemical feed pump

Pump Pressure Relief Valve

Helps in protecting the RO system at a pre-determined setting by relieving the built up pressure

Blending Valve

Allows for a mixture of feed water into the final reverse osmosis product water to achieve a fine-tuned product TDS

Permeate Divert Valve

Diverts the product water to the drain (waste water side) if the TDS reaches a desired setpoint on the computer controller

High Pressure Tank Switch

Automatically turns off the RO system at a pre-determined storage tank pressure

Caster Wheels

Allows for mobility of the RO system

Wooden Crate

Added protection around the RO system during shipment

Voltage Option 1

220V, 50Hz, 1PH, 14.1A

Voltage Option 2

220V, 50Hz, 3PH, 7.9A

Voltage Option 3

220V, 60Hz, 3PH, 6.7A

Voltage Option 4

460V, 60Hz, 3PH, 3.9A

Specifications

AXEON® Naming Matrix

R1	6	1	40

R-SERIES MODEL

R1	Tap Water Model

HOUSING QUANTITY DESIGNATION

1	1 Vessel
2	2 Vessel
3	3 Vessel
4	4 Vessel
5	5 Vessel
6	6 Vessel

MEMBRANE QUANTITY PER HOUSING

1	1 Membrane

4.0 INCH MEMBRANE DIAMETER

Configuration: Single Pass

Feed Water Source*:** TDS <2000 ppm

Standard Recovery Rate: 50-75%

Nominal Salt Rejection: 99%

Permeate Flow* gpm (lpm): 1.0 (3.9)

Minimum Feed Flow gpm (lpm): 4.0 (15.1)

Maximum Feed Flow gpm (lpm): 16.0 (61.0)

Minimum Concentrate Flow gpm (lpm): 3.00 (11.36)

Feed inch: 1 " FNPT

Permeate inch: 3/4" FNPT

Concentrate inch: 3/4" FNPT

Membrane(s) Per Vessel: 1

Membrane Quantity: 1

Membrane Size: 4040

Vessel Array: 1

Vessel Quantity: 1

Pump Type: Multi-Stage

Motor HP: 1.5

RPM @ 60 (50Hz): 3450 (2875)

Standard Voltage: 220V, 60Hz, 1PH, 8.7A

L x W x H inch (cm): 29 x 26 x 61 (73 x 66 x 155)

Weight lb. (kg): 250 (110)

* Product flow rates and recovery are based on equipment test parameters.

** Does not include operating space requirements.

*** Treatment ability of the RO system is dependent on feed water quality. Performance projections must be run for each installation.

† Low temperatures and high feed TDS will significantly affect the systems production capabilities. Computer projections should be run for individual applications which do not meet or exceed minimum

and maximum operating limits.

Part Numbers

Systems

Part Number:	Description:
204716	SYSTEM, RO, R1-1140, 220V 60HZ 1PH, AXEON
204717	SYSTEM, RO, R1-1140, 220V 50HZ 1PH, AXEON
204718	SYSTEM, RO, R1-1140, 220V 60HZ 3PH, AXEON
204719	SYSTEM, RO, R1-1140, 220V 50HZ 3PH, AXEON
204720	SYSTEM, RO, R1-1140, 380V 50HZ 3PH, AXEON
204721	SYSTEM, RO, R1-1140, 460V 60HZ 3PH, AXEON

Options & Upgrades

Part Number:	Description:
204735	SYSTEM, RO, R1-1140, CONTROLLER, AUTO FLUSH, 220V 60HZ 1PH, S150
205310	SYSTEM, RO, R1-1140, CONTROLLER, AUTO FLUSH, 220V 50HZ 1PH, S150
204736	SYSTEM, RO, R1-1140, CONTROLLER, AUTO FLUSH, 220V 60HZ 3PH, S150
205311	SYSTEM, RO, R1-1140, CONTROLLER, AUTO FLUSH, 220V 50HZ 3PH, S150
204737	SYSTEM, RO, R1-1140, CONTROLLER, AUTO FLUSH, 380V 50HZ 3PH, S150
204738	SYSTEM, RO, R1-1140, CONTROLLER, AUTO FLUSH, 460V 60HZ 3PH, S150
204729	SYSTEM, RO, R1-1140, 220V OUTLET, PUMP, CHEMICAL, 220V 60HZ 1PH
205312	SYSTEM, RO, R1-1140, 220V OUTLET, PUMP, CHEMICAL, 220V 50HZ 1PH
205313	SYSTEM, RO, R1-1140, 220V OUTLET, PUMP, CHEMICAL, 220V 60HZ 3PH
205314	SYSTEM, RO, R1-1140, 220V OUTLET, PUMP, CHEMICAL, 220V 50HZ 3PH
205315	SYSTEM, RO, R1-1140, 220V OUTLET, PUMP, CHEMICAL, 380V 50HZ 3PH
204730	SYSTEM, RO, R1-1140, 220V OUTLET, PUMP, CHEMICAL, 460V 60HZ 3PH
204723	SYSTEM, RO, R1-1140, MEMBRANE, HF5 - 4040, AXEON
204724	SYSTEM, RO, R1-1140, MEMBRANE, NF3 - 4040, AXEON
204725	SYSTEM, RO, R1-1140, MEMBRANE, NF4 - 4040, AXEON
206066	SYSTEM, RO, R1-1140, MEMBRANE, HR3 - 4040, AXEON
204726	SYSTEM, RO, R1-1140, VESSEL, PRESSURE, SS, 4040
204727	SYSTEM, RO, R1-1140, CONTROLLER, PH, BL 981411, HANNA
204728	SYSTEM, RO, R1-1140, SWITCH, TANK, PRESSURE, HIGH
204739	SYSTEM, RO, R1-1140, VALVE, RELIEF, PRESSURE, PUMP, CE COMPLIANT
204740	SYSTEM, RO, R1-1140, CONTROLLER, BOARD, EXPANDER, S150
205316	SYSTEM, RO, R1-1140, CONTROLLER, DUAL, TDS, S150
204741	SYSTEM, RO, R1-1140, VALVE, BLENDING
204742	SYSTEM, RO, R1-1140, PORTS, SAMPLE, PERMEATE

204743 SYSTEM, RO, R1-1140, CRATE, WOOD, SINGLE

Images

40980 County Center Drive, Suite 100, Temecula, CA 92591
P: 800-320-4074 • **F:** 800-609-0829 • **E:** sales@axeonwater.com • **W:** www.axeonwater.com

AXEON
WATER TECHNOLOGIES

AXEON V1 Series Coming Soon!

AXEON V1-Series Reverse Osmosis (RO) Systems are designed and manufactured for commercial and light industrial applications. These systems have been engineered for capacities ranging from 500 - 2,000 gallons per day and for municipal and well water supplies. AXEON V1-Series RO Systems come pre-assembled, fully tested, preserved and sanitized and only require simple utility connections once on site. Systems come ready for immediate on-line service, minimal set up and with little adjustment required. The simple, high quality and proven design of AXEON V1-Series RO Systems have made these systems become known as turn-key, cost effective and reliable water purification systems.

AXEON V1-Series Reverse Osmosis Systems feature a new, innovative and expandable design. These systems feature only the highest quality components, including a programmable computer controller with many built-in standard features, a stainless steel booster pump for high performance and corrosion resistance, extra low energy membranes and fiberglass membrane housings for enhanced performance and durability. The major components of the AXEON V1-Series Reverse Osmosis Systems are supported by a rigid aluminum frame and designed in such a way to provide ease of access for servicing, maintenance, and monitoring performance.

Benefits

- Fully Equipped, Customizable and Economical
- Expandable and Lightweight Design
- Decreased Size of Dimensional Footprint
- Components Easily Accessible
- Pre-Plumbed, Wired and Assembled - Turn Key
- Factory Tested and Preserved
- Low Operation Costs
- Low Maintenance Costs
- Easy Maintenance and Servicing
- Integrated Pre-Filtration
- Lightweight and Non-Corrosive Aluminum Frame
- AXEON Components
- Numerous Options and Upgrades to Suit Most Applications
- CE Compliant
- 1-Year Limited Warranty
- Made in the U.S.A.

AXEON Value Added

- 5-Star Technical and Customer Support Before and After the Sale
- Full Documentation Provided With Every System Manufactured
- Readily Available Replacement Parts
- One-On-One Applications Engineering Consultation

Features

White Powder Coated Aluminum Frame

Corrosion resistant and light weight

40980 County Center Drive, Suite 100, Temecula, CA 92591
P: 800-320-4074 • **F:** 800-609-0829 • **E:** sales@axeonwater.com • **W:** www.axeonwater.com

C22 Computer Controller with Feed Flush

Allows for pre-treat lockout functionality, tank level input, permeate TDS monitoring, low pressure monitoring, feed flush, electronic push button flush bypass and features a convenient LED display and alarm functionality

AXEON Permeate Flow Meter

Monitors the product water flow rate

AXEON Concentrate Flow Meter w/Needle Valve

Monitors the waste water flow rate

AXEON Concentrate Recycle Flow Meter w/Needle Valve

Monitors the waste water flow rate being recycled back through the ro system

AXEON 0-100 psi Pre-Filter In Pressure Gauge

Monitors the feed water pressure entering the pre-filters

AXEON 0-100 psi Pre-Filter Out Pressure Gauge

Monitors the outlet water pressure exiting the pre-filters

AXEON 0-300 psi Pump Pressure Gauge

Monitors the pump discharge pressure

AXEON 0-300 psi Concentrate Pressure Gauge

Monitors the waste water discharge pressure

AXEON 5 Micron Sediment Pre-Filter

Reduces the amount of sediment from the feed water source

Pentek® Single O-Ring Filter Housing

Heavy duty, easy to maintain, long lasting and corrosion resistant

AXEON HF4 Extra Low Energy Membrane Elements

Operate at less than half the operating pressure of standard membranes

AXEON Fiberglass Membrane Housings

Higher resistance to varying feed water conditions and chemicals

401 Brass Rotary Vane Pump

High volume rotary vane pump built for durability and continuous duty

ODP Carbonator Motor

110v / 220v, 50hz / 60hz motor for continuous runtime

ASCO® Feed Solenoid Valve

Solenoid valve features a high flow and low friction loss

Feed Low Pressure Switch

Protects the RO pump from damage and cavitation when a low pressure condition occurs

John Guest Push and Pull Fittings with Locking Safety Clips

Durable, long lasting, easy to use and corrosion resistant fittings

Images

APPENDIX E

Culligan MATRIX SOLUTIONS™

The Culligan® E1 Series Reverse Osmosis System

EXAMPLES OF MARKETS SERVED:

AGRICULTURE
ASSISTED LIVING
AUTOMOTIVE
BIO-PHARMACEUTICAL
BOTANICALS
BOTTLED WATER PLANTS
CASINOS
CHEMICAL PROCESSING
COMMERCIAL BUILDINGS
DAIRIES
EDUCATIONAL FACILITIES
ENERGY/POWER/ COGENERATION
ELECTRONICS
GOVERNMENT
GROCERY
FOOD/BEVERAGE
HEALTH CLUBS
HOTELS/LODGING
HOSPITALS/HEALTHCARE
INK/DYE PRODUCTION
LABORATORIES
LAUNDRY
MANUFACTURING
MARINE
MILITARY
MULTI-UNIT HOUSING
MUNICIPALITIES
PLATING/COATING
PRINTING
PULP/PAPER
OIL/PETROLEUM/GAS
TEXTILE
THEME PARKS
UNIVERSITIES
VEHICLE WASH

Excellent water quality is a smart business decision

The E1 Reverse Osmosis System is an economical water treatment solution, which reduces operating and post treatment costs. The E1 Reverse Osmosis system helps you reduce maintenance costs by reducing contaminants* from your water that affect taste and clog equipment. Control your installation costs by using a system configured for your unique needs. Keep your operating costs low with an easy-to-use electronic controller.

The E1 RO is part of the Culligan Matrix Solutions™ that combine durable and efficient equipment, systems experience, and technical experts who understand your unique requirements. From planning your system to installing your water treatment equipment, Culligan Matrix Solutions offer options that help deliver the quality of water to meet your needs. Consult with a Culligan representative to create your solution.

*contaminants may not necessarily be in your water

Culligan Matrix Solutions Advantage:

- Simple System Integration
- Global Product Platform
- Flexible Configurations
- Quick Delivery/Easy Installation

Pre-Treatment Solutions | **Membrane Solutions** | Deionization Solutions | Storage Solutions | Distribution Solutions

System Specifications

Specification	US	Metric
Inlet Pressure (dynamic)	20-50 psig	1.4 – 3.5 bar
Maximum Operating Pressure	95–225 psig	6.6 – 15.5 bar
Power Voltage Frequency Phase	115 60 Hz 1	115 60 Hz 1
Feed Water Temperature	33–100° F	1-40° C
Turbidity, maximum	< 1 NTU	< 1 NTU
pH Range	3 – 11	3 – 11
Chlorine, max.	0 mg/l	0 mg/l
Total Dissolved Solids, max.	2500 mg/l	2500 mg/l
Silt Density Index Well Water Surface Water	< 3 < 5	< 3 < 5
Iron, maximum	< 0.1 mg/l	< 0.1 mg/l
Salt Rejection, nominal	> 98 %	> 98 %
Product Water Hardness	< 1% Raw Hardness	< 1% Raw Hardness

Examples of RO Applications

- Ice Production/Drinking Water—Reduces scaling, improves taste and clarity
- Steam Production—Reduces scaling and maintenance
- Humidification—Reduces scaling and dusting
- Misting—Reduces scaling and help extend equipment life
- Pretreatment for High Purity Systems—Reduces regeneration requirements
- Reclaim/Recycling—Water conservation
- Washing and Rinsing—Improves performance, spot-free rinses

Standard Features

- Wall Mount Design
- Rotarty Vane Pump
- Inlet Solenoid Valve
- Pretreatment Sediment Filter
- Concentrate and Recirculation Throttling Valves
- Pressure Indicators
- FRP Membrane Housings
- Culligan CP Control Panel
  - Level Control input
  - Pretreatment Lockout
  - Startup Flush/timed Flush
  - Low pressure auto-restart

Optional Features & Accessories

- Multi-Stage Pretreatment Filters
- Storage Tanks
- Level Controls
- Chemical Feed Pumps
- Ultraviolet Sterilization
- Pressurized Storage System
- Floor Stand
- Global Power Platform
- 220 v/50 HZ
- Additional Customization Available on request

E1 Reverse Osmosis System

Model	Nominal Capacity* (gpm/lpm)	Nominal Capacity* (gpd/m³/h)	Module Qty & Size	Nominal System Recovery (%)	Motor HP - KW	Dimension L x W x H (inches– milimeters)
E1-1S	0.17	250	(1), 2.5"x 21"	25	1/3	37 x 10 x 37.75
	0.65	0.04			0.25	940 x 254 x 959
E1-2S	0.35	500	(2), 2.5"x 21"	25	1/3	37 x 10 x 37.75
	1.31	0.08			0.25	940 x 254 x 959
E1-3S	0.52	750	(3), 2.5"x 21"	50	1/3	37 x 10 x 37.75
	1.97	0.12			0.25	940 x 254 x 959
E1-4S	0.69	1000	(4), 2.5"x 21"	50	1/2	37 x 10 x 37.75
	2.63	0.16			0.37	940 x 254 x 959
E1-2L	0.83	1200	(2), 2.5"x 40"	50	3/4	37 x 10 x 46.25
	3.15	0.19			0.56	940 x 254 x 1175
E1-3L	1.18	1700	(3), 2.5"x 40"	50	3/4	37 x 10 x 46.25
	4.47	0.27			0.56	940 x 254 x 1175
E1-4L	1.53	2200	(4), 2.5"x 40"	50	3/4	37 x 10 x 46.25
	5.76	0.35			0.56	940 x 254 x 1175
E1-1F	1.39	2000	(1), 4 x 40	25	3/4	37 x 10 x 46.25
	5.26	0.32			0.56	940 x 254 x 159
E1-2F	2.78	4000	(2), 4 x 40	50	3/4	37 x 10 x 46.25
	10.52	0.63			0.56	940 x 254 x 159

*Nominal capacity based on new RO membranes operating on a properly pretreated feed water of 500 ppm TDS as NaCl, 77 °F (25 °C), Silt Density Index (SDI) below 3, and supplying water to atmosphere. Productivity will vary depending on the actual feed water quality and temperature.

Finally, an end-to-end solution from a single source.

Place your commercial and industrial water treatment needs in the hands of a global leader.

For over 70 years, Culligan has made better water. Our global network, comprised of 800+ dealers and international licensees in over 90 countries, is dedicated to addressing your water-related problems. As a worldwide leader in water treatment, our sales representatives and service technicians are familiar with the local water conditions in your area. Being global and local position us to deliver customized solutions to commercial and industrial water issues that affect your business and your bottom line.

www.culliganmatrixsolutions.com • 866-787-4293

RR Donnelley # 34923 Print 02/10 ©2010 Culligan International Company

All trademarks used herein are registered trademarks of Culligan International Company. Products manufactured or marketed by Culligan and its affiliates are protected by patents issued or pending in the United States and other countries. Culligan reserves the right to change the specifications referred to in this literature at any time, without prior notice.

Printed on recycled paper.

Series E1 Plus

Reverse Osmosis Systems

Specifications and Operating Data

Models	Nominal Capacity[1]	Module Qty & Size	Approx. Recovery[2]	Motor	Power Req'd	Pipe Size			Dimensions			Approx. Ship. Weight
						Feed (Tube)	Product (Tube)	Waste (Tube)	Width	Depth	Height	
	gpd	in.	%	HP	VAC	in.	in.	in.	in	in	in	lb
	L/day	mm	%	KW	VAC	in.	in.	in.	cm	cm	cm	kg
E1-1S	250	1, 2.5 x 21	25	1/3	115V/60/1	1/2	1/2	3/8	34.5	8.7	34.8	75
	946.3	1, 64 x 533	25	0.25	115V/60/1	1/2	1/2	3/8	88	22	88	34
E1-2S	500	2, 2.5 x 21	50	1/3	115V/60/1	1/2	1/2	3/8	34.5	8.7	34.8	77
	1892.5	2, 64 x 533	50	0.25	115V/60/1	1/2	1/2	3/8	88	22	88	35
E1-3S	750	3, 2.5 x 21	50	1/3	115V/60/1	1/2	1/2	3/8	34.5	8.7	34.8	86
	2838.8	3, 64 x 533	50	0.25	115V/60/1	1/2	1/2	3/8	88	22	88	39
E1-4S	1000	4, 2.5 x 21	50	1/2	115V/60/1	1/2	1/2	3/8	38.5	8.7	34.8	88
	3785	4, 64 x 533	50	0.37	115V/60/1	1/2	1/2	3/8	98	22	88	40
E1-2L	1200	2, 2.5 x 40	50	3/4	115V/60/1	1/2	1/2	3/8	34.5	8.7	45.5	81
	4542	2, 64 x 1016	50	0.56	115V/60/1	1/2	1/2	3/8	88	22	116	37
E1-3L	1700	3, 2.5 x 40	50	3/4	115V/60/1	1/2	1/2	3/8	34.5	8.7	45.5	92
	6434.5	3, 64 x 1016	50	0.56	115V/60/1	1/2	1/2	3/8	88	22	116	42
E1-4L	2200	4, 2.5 x 40	50	3/4	115V/60/1	1/2	1/2	3/8	38.5	8.7	45.5	96
	8327	4, 64 x 1016	50	0.56	115V/60/1	1/2	1/2	3/8	98	22	116	44
E1-1F	2000	1, 4 x 40	25	3/4	115V/60/1	1/2	1/2	3/8	34.5	8.7	45.5	88
	7570	1, 102 x 1016	25	0.56	115V/60/1	1/2	1/2	3/8	88	22	116	40
E1-2F	4000	1, 4 x 40	50	3/4	115V/60/1	1/2	1/2	3/8	34.5	8.7	45.5	110
	15140	1, 102 x 1016	50	0.56	115V/60/1	1/2	1/2	3/8	88	22	116	50

[1] Nominal initial capacity based on properly pretreated feed water of 500 ppm TDS, temperature of 77° F (25° C), Silt Density Index below 3.0 and an applied pressure of 225 psi. Productivity will vary depending on other feed water conditions.

[2] Depending on feed water quality, it may be possible to operate any unit at a higher recovery to reduce operating costs.

NOTE: Operational, maintenance and replacement requirements are essential for this product to perform as advertised.

Culligan MATRIX SOLUTIONS

Commercial/Industrial Systems

www.culliganmatrixsolutions.com

Revised 08/10

©2010 Culligan International Company

1-800-Culligan

Series E1

Reverse Osmosis Systems

Specifications and Operating Data

Models	Nominal Capacity[1]	Module Qty & Size	Approx. Recov-ery[2]	Motor	Power Req'd	Pipe Size			Dimensions			Approx. Ship. Weight
						Feed (Tube)	Product (Tube)	Waste (Tube)	Width	Depth	Height	
	gpd	in.	%	HP	VAC	in.	in.	in.	in	in	in	lb
	L/day	mm	%	KW	VAC	in.	in.	in.	cm	cm	cm	kg
E1-1S	250	1, 2.5 x 21	16	1/3	115V/60/1	1/2	1/2	3/8	34.5	8.7	34.8	75
	946.3	1, 64 x 533	16	0.25	115V/60/1	1/2	1/2	3/8	88	22	88	34
E1-2S	500	2, 2.5 x 21	32	1/3	115V/60/1	1/2	1/2	3/8	34.5	8.7	34.8	77
	1892.5	2, 64 x 533	32	0.25	115V/60/1	1/2	1/2	3/8	88	22	88	35
E1-2L	1008	2, 2.5 x 40	36	1/3	115V/60/1	1/2	1/2	3/8	34.5	8.7	45.5	81
	3815.3	2, 64 x 1016	36	0.25	115V/60/1	1/2	1/2	3/8	88	22	116	37
E1-1F	2000	1, 4 x 40	24	3/4	115V/60/1	1/2	1/2	3/8	34.5	8.7	45.5	88
	7570	1, 102 x 1016	24	0.56	115V/60/1	1/2	1/2	3/8	88	22	116	40
E1-2F	4000	1, 4 x 40	48	3/4	115V/60/1	1/2	1/2	3/8	34.5	8.7	45.5	110
	15140	1, 102 x 1016	48	0.56	115V/60/1	1/2	1/2	3/8	88	22	116	50

[1] Nominal initial capacity based on properly pretreated feed water of 500 ppm TDS, temperature of 77° F (25° C), Silt Density Index below 3.0 and an applied pressure of 225 psi. Productivity will vary depending on other feed water conditions.

[2] Depending on feed water quality, it may be possible to operate any unit at a higher recovery to reduce operating costs.

NOTE: Operational, maintenance and replacement requirements are essential for this product to perform as advertised.

Revised 08/10
©2010 Culligan International Company
1-800-Culligan

Culligan MATRIX SOLUTIONS

Commercial/Industrial Systems
www.culliganmatrixsolutions.com

Culligan®

LIMITED WARRANTY

COMMERCIAL/INDUSTRIAL REVERSE OSMOSIS SYSTEMS

You have just purchased one of the finest reverse osmosis water conditioning units made. As an expression of our confidence in Culligan products, your reverse osmosis water conditioning unit is warranted to the original end-user, when installed in accordance with Culligan International Company specifications, against defects in material and workmanship from the date of original installation, as follows:

For a period of ONE YEAR, { **The entire reverse osmosis conditioning unit, including the reverse osmosis modules, but excluding the expendable filter cartridges used in this unit.**

If a part described above becomes defective, within the specified period, you should notify your independently operated Culligan dealer and arrange a time during normal business hours for the dealer to inspect the reverse osmosis unit on your premises. Any part found defective within the terms of this warranty will be repaired or replaced by the dealer. You pay only freight from our factory and local dealer charges.

Of course, damage caused by accident, fire, flood, freezing, Act of God, misuse, misapplication, neglect, alteration, installation or operation contrary to our printed instructions, or by the use of accessories or components which do not meet Culligan specifications, is not covered by this warranty.

Our product performance specifications are furnished with each water conditioning unit. TO THE EXTENT PERMITTED BY LAW, CULLIGAN DISCLAIMS ALL IMPLIED WARRANTIES INCLUDING, WITHOUT LIMITATION, WARRANTIES OF MERCHANTABILITY AND FITNESS FOR PARTICULAR PURPOSE; TO THE EXTENT REQUIRED BY LAW, ANY SUCH IMPLIED WARRANTIES ARE LIMITED IN DURATION TO THE ONE-YEAR PERIOD SPECIFIED ABOVE FOR THE PARTS DESCRIBED IN THIS LIMITED WARRANTY. As manufacturer, we do not know the characteristics of your water supply or the purpose for which you are purchasing a water conditioner. Please understand that the quality of water supplies may vary seasonally or over a period of time, and that your water usage rate may vary as well. Water characteristics can also change considerably if your water conditioner is moved to a new location. For these reasons, we assume no liability for the determination of the proper equipment necessary to meet your requirements, and we do not authorize others to assume such obligations for us. Further, we assume no liability and extend no warranties, express or implied, for the use of this product on a non-potable water source. OUR OBLIGATIONS UNDER THIS WARRANTY ARE LIMITED TO THE REPAIR OR REPLACEMENT OF THE FAILED PARTS OF THE WATER CONDITIONER, AND WE ASSUME NO LIABILITY WHATSOEVER FOR DIRECT, INCIDENTAL, CONSEQUENTIAL, SPECIAL, GENERAL, OR OTHER DAMAGES, WHETHER FROM CORROSION OR OTHER CAUSES.

CONSUMERS:

Some states do not allow limitations on how long an implied warranty lasts, so the above limitation may not apply to you. Similarly, some states do not allow the exclusion of incidental or consequential damages, so the above limitation or exclusion may not apply to you. This warranty gives you specific legal rights, and you may also have other rights which vary from state to state. Consult your telephone directory for your local independently-operated Culligan dealer, or write Culligan International Company, for warranty and service information.

CULLIGAN INTERNATIONAL COMPANY
One Culligan Parkway
Northbrook, IL 60062

00881418 (Rev. B 1/12/01)

Printed in USA

NOTES:

(1) ALL DIMENSIONS ARE GIVEN IN INCHES AND ARE APPROXIMATE.
(2) THE RO INLET WATER CONNECTION IS 1/2" TUBING.
(3) THE PRODUCT WATER CONNECTION IS 1/2" TUBING FOR ALL UNITS.
(4) THE CONCENTRATE WATER CONNECTION IS 3/8" TUBING FOR ALL UNITS.
(5) AN OPTIONAL BRACKET FOR WALL MOUNTING ON 18" OR 20" CENTERS IS AVAILABLE THE WALL MUST BE CAPABLE OF SUPPORTING AT LEAST 130 POUNDS.
(6) PROVIDE A DRAIN CAPABLE OF HANDLING AT LEAST 2.3 GALLONS PER MINUTE. DO NOT MAKE A DIRECT CONNECTION TO THE DRAIN. PROVIDE AN AIR GAP OF AT LEAST FOUR TIMES THE DIAMETER OF THE DRAIN PIPE TO CONFORM TO SANITATION CODES AND PERMIT THE OBSERVATION OF THE DRAIN FLOW. DO NOT INSTALL A VALVE IN DRAIN LINE.
(7) THE POWER CORD IS 6 FEET LONG.

MODEL	NOMINAL CAPACITY GPM	NOMINAL CAPACITY GPD	MODULE QTY & SIZE	APPROX. SYSTEM RECOV. %	MOTOR HP	ELECTRIC POWER REQD VAC	DIMENSIONS L x W x D INCHES	OPER. WEIGHT LBS
E1-1S	0.17	250	1, 2.5 x 21	25	1/3	115/1/60	34.8 x 34.5 x 8.7	77
E1-2S	0.35	500	2, 2.5 x 21	50	1/3	115/1/60	34.8 x 34.5 x 8.7	81
E1-3S	0.52	750	3, 2.5 x 21	50	1/3	115/1/60	34.8 x 34.5 x 8.7	92
E1-4S	0.69	1000	4, 2.5 x 21	50	1/2	115/1/60	34.8 x 38.5 x 8.7	96
E1-2L	0.83	1200	2, 2.5 x 40	50	3/4	115/1/60	45.5 x 34.5 x 8.7	88
E1-3L	1.18	1700	3, 2.5 x 40	50	3/4	115/1/60	45.5 x 34.5 x 8.7	103
E1-4L	1.53	2200	4, 2.5 x 40	50	3/4	115/1/60	45.5 x 38.5 x 8.7	111
E1-2F	1.39	2000	1, 4 x 40	25	3/4	115/1/60	45.5 x 34.5 x 8.7	97
E1-1F	2.78	4000	2, 4 x 40	50	3/4	115/1/60	45.5 x 34.5 x 8.7	129

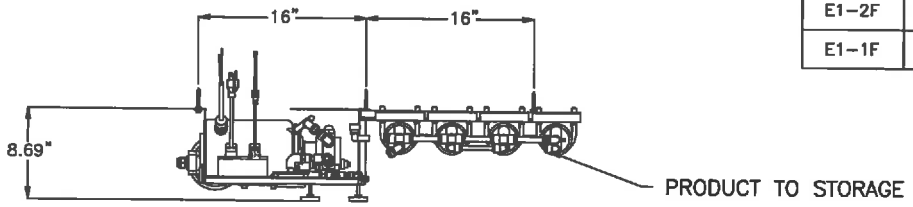

TOP VIEW

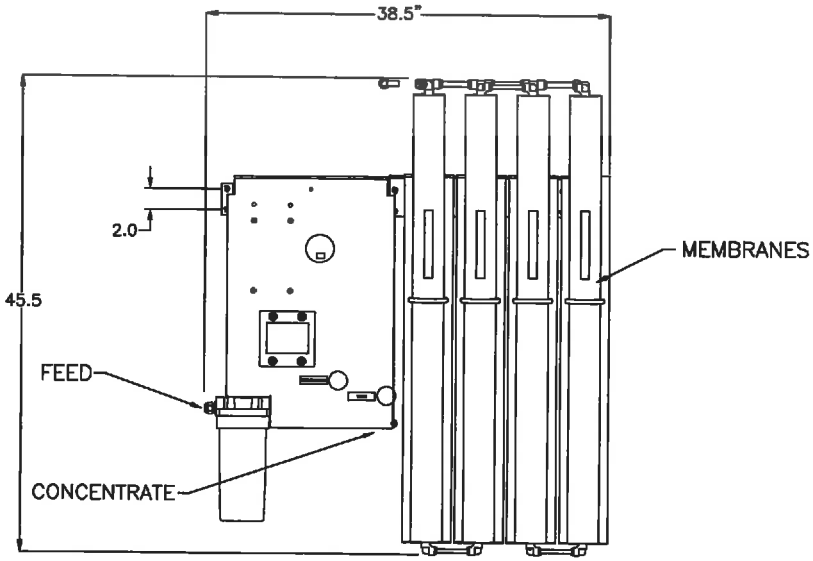

FRONT VIEW

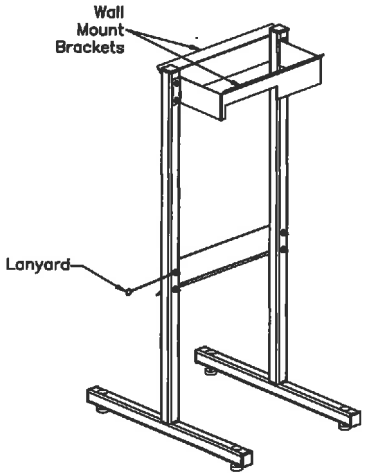

OPTIONAL FLOOR STAND
17"W x 43"H x 24"D

MODEL E1-4L SHOWN

DO NOT SCALE DRAWING
TOLERANCES: ±1/8" UNLESS OTHERWISE NOTED

Let	Change	By	App	Date

Culligan® ENGINEERED SYSTEMS
ROSEMONT, ILLINOIS

PRINT AND BILL OF MATERIAL ARE NOT TO BE USED WITHOUT THE WRITTEN CONSENT OF CULLIGAN INTERNATIONAL CO.

NAME: SERIES E1 PLUS REVERSE OSMOSIS UNIT TECHNICAL DATA SHEET

DETAILED BY: KSR 07/08/10 | APP. BY: | SHEET 1 OF 1

REF. NO. | PART NO. RO_E1_PLUS

NOTES:

(1) ALL DIMENSIONS ARE GIVEN IN INCHES AND ARE APPROXIMATE.
(2) THE RO INLET WATER CONNECTION IS 1/2" TUBING.
(3) THE PRODUCT WATER CONNECTION IS 1/2" TUBING FOR ALL UNITS.
(4) THE CONCENTRATE WATER CONNECTION IS 3/8" TUBING FOR ALL UNITS.
(5) AN OPTIONAL BRACKET FOR WALL MOUNTING ON 18" OR 20" CENTERS IS AVAILABLE THE WALL MUST BE CAPABLE OF SUPPORTING AT LEAST 130 POUNDS.
(6) PROVIDE A DRAIN CAPABLE OF HANDLING AT LEAST 2.3 GALLONS PER MINUTE. DO NOT MAKE A DIRECT CONNECTION TO THE DRAIN. PROVIDE AN AIR GAP OF AT LEAST FOUR TIMES THE DIAMETER OF THE DRAIN PIPE TO CONFORM TO SANITATION CODES AND PERMIT THE OBSERVATION OF THE DRAIN FLOW. DO NOT INSTALL A VALVE IN DRAIN LINE.
(7) THE POWER CORD IS 6 FEET LONG.

MODEL	NOMINAL CAPACITY GPM	NOMINAL CAPACITY GPD	MODULE QTY & SIZE	APPROX. SYSTEM RECOV. %	MOTOR HP	ELECTRIC POWER REQD VAC	DIMENSIONS L x W x D INCHES	OPER. WEIGHT LBS
E1-1S	0.17	250	1, 2.5 x 21	16	1/3	115/1/60	34.8 x 34.5 x 8.7	77
E1-2S	0.35	500	2, 2.5 x 21	32	1/3	115/1/60	34.8 x 34.5 x 8.7	81
E1-2L	0.7	1008	2, 2.5 x 40	36	1/3	115/1/60	45.5 x 34.5 x 8.7	88
E1-2F	1.39	2000	1, 4 x 40	24	3/4	115/1/60	45.5 x 34.5 x 8.7	97
E1-1F	2.78	4000	2, 4 x 40	48	3/4	115/1/60	45.5 x 34.5 x 8.7	129

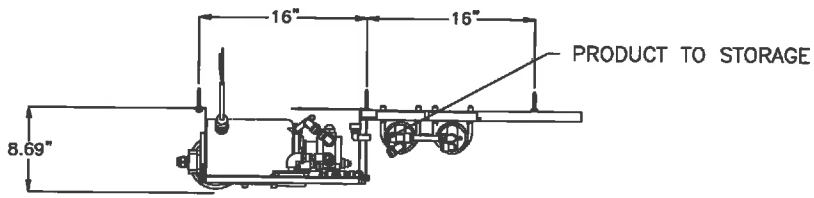

TOP VIEW

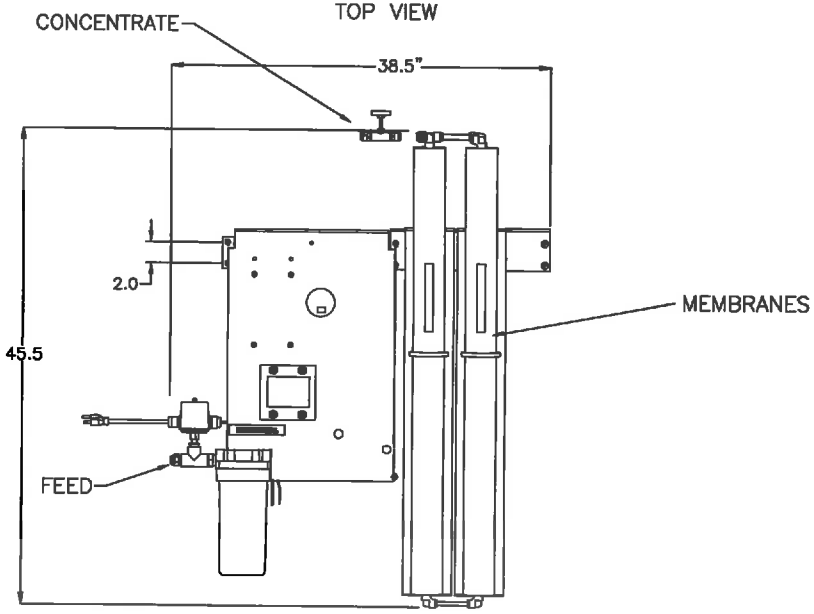

FRONT VIEW

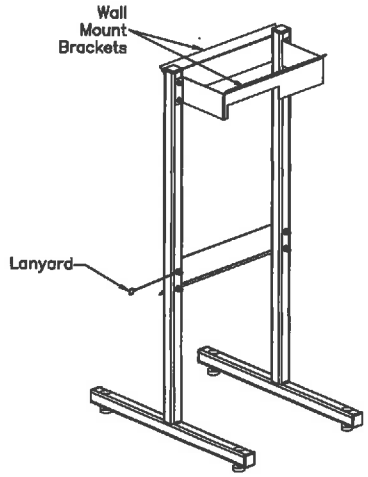

OPTIONAL FLOOR STAND
17"W x 43"H x 24"D

MODEL E1-2L SHOWN

DO NOT SCALE DRAWING
TOLERANCES: ±1/8" UNLESS OTHERWISE NOTED

Let	Change	By	App	Date

Culligan® ENGINEERED SYSTEMS
ROSEMONT, ILLINOIS

PRINT AND BILL OF MATERIAL ARE NOT TO BE USED WITHOUT THE WRITTEN CONSENT OF CULLIGAN INTERNATIONAL CO.

NAME: SERIES E1 REVERSE OSMOSIS UNIT TECHNICAL DATA SHEET

DETAILED BY: KSR 07/08/10 | APP. BY: | SHEET 1 OF 1

REF. NO. | PART NO. RO_E1

Experience the difference Culligan can make.

Culligan Good Water Machine® Drinking Water Appliance

Your System for Life!

- Local Water Expertise
- Trusted Leader for Over 70 Years
- Certified Sales, Installation and Service Professionals
- 100% Satisfaction Guarantee*
- Full Service (salt delivery, filter changes and more)
- Affordable Water Solutions for Home and Business
- Complimentary In-Home Water Analysis

Culligan

better water. pure and simple.™

Demand the Great Tasting, Quality Drinking Water You Deserve.

Leading a healthy life is a conscious decision—one that you need to work at on a daily basis. To help you feel and perform at your best, various health experts recommend drinking at least eight glasses of water every day. And now staying healthy and hydrated are easier than ever with the Culligan Good Water Machine® appliance—offered exclusively through your local Culligan dealer.

The Finest in Water Filtration

The Culligan Good Water Machine® appliance's reverse osmosis (RO) filtration method improves the taste and odor of your drinking water and reduces microscopic impurities.† With reverse osmosis, water passes through an ultra-thin, semi-permeable membrane, which filters unwanted particles, such as sodium and lead. The result is the deliciously clear water you'd expect from the water experts at Culligan®—available in the convenience of your own home, right at your fingertips.

With Culligan®, Getting Clear, Great-Tasting Water Is Easy.

To enjoy the clean, invigorating water provided by the Culligan Good Water Machine® appliance, just call your local Culligan® expert who will professionally install the unit. Ideal for even the largest family, the Culligan Good Water Machine® appliance is a cost-effective solution that will give you and your family great tasting Culligan® water for years to come. Even your kids will prefer the refreshing taste of your new, crystal-clear Culligan® water—a great alternative to sugary drinks.

And don't limit yourself to just drinking the water. Use it for cooking and in a variety of other culinary ways to give you and your family:

- better-tasting coffee, tea and juices
- more flavorful soups, sauces and pasta
- richer baby formula
- clearer ice cubes
- crisper fruits and vegetables

- Available in three (3) different colors: white, chrome and brushed nickel
- Constructed of plastic and stainless steel
- Easily mounts on kitchen sink
- Comes with:
  - Integral lights that indicate water quality (see right)
  - Aqua-Clear® faucet rotary operation
  - Air gap faucet (non-air gap version available for international)

Culligan Innovation and Reliability.

Four-Stage Filtration. Ensures Clear Great Tasting Water.

Manifold Assembly

Houses three separate filter technologies in a unique space saving design.

Automatic Shutoff Valve

Shuts off the system when the reservoir tank is full.

Reservoir Tank

Durable, high-quality steel tank ensures you'll have a plentiful supply of refreshing water.

Sediment Filter

Screens out sediments and particles down to 5 microns that cause cloudy water.

Reverse Osmosis Membrane

Reduces dissolved substances such as radium, lead and many others.†

Carbon Filter

A carbon filter reduces elements that cause water to taste and smell unpleasant, including the taste and odor of chlorine.

Second Carbon Filter

Ensures your drinking water is clear and fresh.

Designer Faucet

Delivers delicious water at the touch of a finger. Available in white, chrome and brushed nickel.

† Consult the Performance Data Sheet for the specific contaminant reduction capabilities of this device. Includes Lifetime Warranty on Good Water Machine† (excluding replaceable filter cartridge & R.O. membrane)

The Good Water Sentry™ Monitor option continually monitors the RO filter for optimum operation.

- Green means quality Culligan water
- Red means it's time for a filter change

The Culligan Good Water Machine® has been tested and certified by WQA and is certified to meet NSF standards for RO systems. See back for details.

Trust Your Local Water Experts

For over 70 years, Culligan has led the water treatment industry in innovation and service. Culligan products are produced with world-class quality backed by solid warranties** and the most experienced installation and service technicians in the industry.

Your local, reliable Culligan dealer will perform a complimentary, no obligation water analysis and help you chose the system that is just right for your home and family.

Now that's service!

Why Millions Trust Culligan to Deliver the Best Water

- All Culligan products are backed with a 100% Satisfaction Guarantee*. If you're not completely satisfied within 30 days from the date of purchase, simply notify your dealer for a full refund.
- Your local Culligan Man® has a full line of quality water softeners, filters, drinking water systems and bottled water to fit any need.
- Manufacturing takes place under exacting world-class quality control.
- Culligan products have the industry's most state-of-the-art features because we maintain our own extensive research and development facility. No other water treatment company holds as many patents.
- With over 800 dealers worldwide in more than 90 countries globally, a Culligan Man is just around the corner to make sure you receive the Culligan water you've come to enjoy.
- Your local Culligan Man offers salt delivery, filter changes, financing and more, making Culligan a full-service water treatment company.

The Culligan Good Water Machine® is tested and certified by WQA to NSF/ANSI Standard 58 for the reduction of:

Barium	Radium 226/228	Trivalent Chromium
Cadmium	Hexavalent Chromium	Copper
Selenium	Total Dissolved Solids	Lead

CAUTION: Do not use with water that is microbiologically unsafe or of unknown quality without adequate disinfection before or after the system.

The contaminants or other substances removed or reduced by this water treatment device are not necessarily in your water. Source water exceeding chemical parameters requires pre-treatment.

Culligan.

better water. pure and simple.®

www.culligan.com
1-800-CULLIGAN

© 2004 Culligan International Company
Rolling Meadows, Illinois 60008
Printed 06/09

Products manufactured and marketed by Culligan International Company (Culligan) and its affiliates are protected by patents issued or pending in the United States and other countries. Culligan reserves the right to change the specifications referred to in this literature at any time without prior notice. Culligan, Culligan Cutter, Gen-Clean, Cal-Flush, Accucell, Quiet Cycle, Culligan Gold Series, Culligan Man, Hey Culligan Man are trademarks of Culligan International Company or its affiliates.

The Good Housekeeping Seal applies to drinking water systems, cartridges and whole house filters.

* Offer valid on residential use products only. Customer must notify their Culligan dealer no later than 30 days after purchase. Offer good at participating dealer locations only.

** Warranty available separately.

System Specifications

Dimensions - Filter Assembly . . . . . .7.5"W x 3"D x 16.5"H
- Storage Tank - Std . . . . . .9" Diameter x 14"H
- Medium. . . . . .11" Diameter x 14"H
- Large. . . . . .15.5" Diameter x 24"H

Storage Capacity. . . . . .- Standard Tank 2 gallons
- Medium Tank. . . . . .3 gallons
- Large Tank. . . . . .9 gallons

System Flow Sequence . . . . . .Particle Filter, Activated Carbon Filter, ...Reverse Osmosis Membrane Filter, Storage Tank, ...Polishing Filter, Dispensing Faucet

Particle Filter . . . . . .5 Micron Spun Polypropylene

Activated Carbon Filter. . . . . .Solid Carbon Block

Reverse Osmosis Membrane Filter . . . . . .Culligan Aqua-Cleer® Thin Film Composite

Polishing Filter . . . . . .Cullar G Activated Carbon

Dispensing Faucet . . . . . .Culligan Aqua-Cleer Faucet Rotary Operation, Stainless Steel and Resin Flow Passages, with Built-in Siphon Break

Colors ..... Polished Chrome or White

Model	2 Gallon	3 Gallon	9 Gallon
System DPR* to Storage Tank	14.5 (54.88 L)	14.5 (54.88 L)	14.5 (54.88 L)
Efficiency Rating[3]	17.9%	17.9%	17.9%
Recovery Rating4	30.8%	30.8%	30.8%

* DPR - Daily Production Rate

Product Production Rate without storage tank to atmosphere1
- AC-30 Models . . . . . .30 gpd (114 L/day)

Ratio of Product to Flush Flow2
Soft Water Applications . . .2:3
Hard Water Applications . .1:3 - 1:5

1 Rating at 50 psi, 77°F, 500 mg/L TDS Influent, Without Storage Tank to atmosphere. This is a factory specification for membrane production. Actual production rate and TDS rejection will depend on temperature, water pressure, TDS level, membrane variation and usage pattern.

2 May vary with pressure. See Technical Manual for all hard water applications and applications where TDS exceeds 1000 mg/L (ppm).

3 Efficiency rating means the percentage of the influent water to the system that is available to the user as reverse osmosis treated water under operating conditions that approximate typical daily usage.

4 Recovery rating means the percentage of the influent water to the membrane portion of the system that is available to the user as reverse osmosis treated water when the system is operated without a storage tank or when the storage tank is bypassed.

Culligan Lifetime Limited Warranty

Culligan Good Water Machine® AC-30 Model Series

You have just purchased one of the finest drinking water systems made. As an expression of our confidence in Culligan products, your drinking water system is warranted to the original end-user, when installed in accordance with Culligan International Company specifications, against defects in material and workmanship from the date of original installation, as follows:

• **For the LIFETIME of the original end-user**	**The entire reverse osmosis water conditioning unit, EXCLUDING THE EXPENDABLE FILTER CARTRIDGES AND REVERSE OSMOSIS MEMBRANE FILTER USED IN THE UNIT.**
• **For a period of ONE YEAR**	**The Culligan brand reverse osmosis membrane filter.**

If a part described above is found defective within the specified period, you should notify your independently operated Culligan dealer and arrange a time during normal business hours for the dealer to inspect the drinking water system on your premises. Any part found defective within the terms of this warranty will be repaired or replaced by the dealer. You pay only freight from our factory and local dealer charges.

Damage caused by accident, fire, flood, freezing, Act of God, misuse, misapplication, neglect, alteration, installation or operation contrary to our printed instructions, or by the use of accessories or components which do not meet Culligan specifications, is not covered by this warranty.

Our product performance specifications are furnished with each drinking water system. TO THE EXTENT PERMITTED BY LAW, CULLIGAN DISCLAIMS ALL IMPLIED WARRANTIES INCLUDING, WITHOUT LIMITATION, WARRANTIES OF MERCHANTABILITY AND FITNESS FOR PARTICULAR PURPOSE; TO THE EXTENT REQUIRED BY LAW, ANY SUCH IMPLIED WARRANTIES ARE LIMITED IN DURATION TO THE ONE-YEAR PERIOD SPECIFIED ABOVE FOR THE PARTS DESCRIBED IN THIS LIMITED WARRANTY. As manufacturer, we do not know the characteristics of your water supply or the purpose for which you are purchasing a drinking water system. Please understand that the quality of water supplies may vary seasonally or over a period of time, and that your water usage rate may vary as well. Water characteristics can also change considerably if your drinking water system is moved to a new location. For these reasons, we assume no liability for the determination of the proper equipment necessary to meet your requirements, and we do not authorize others to assume such obligations for us. Further, we assume no liability and extend no warranties, express or implied, for the use of this product on a non-potable water source. OUR OBLIGATIONS UNDER THIS WARRANTY ARE LIMITED TO THE REPAIR OR REPLACEMENT OF THE FAILED PARTS OF THE DRINKING WATER SYSTEM, AND WE ASSUME NO LIABILITY WHATSOEVER FOR DIRECT, INCIDENTAL, CONSEQUENTIAL, SPECIAL, GENERAL, OR OTHER DAMAGES, WHETHER FROM CORROSION OR OTHER CAUSES.

CONSUMERS:
Some states do not allow limitations on how long an implied warranty lasts, so the above limitation may not apply to you. Similarly, some states do not allow the exclusion of incidental or consequential damages, so the above limitation or exclusion may not apply to you. This warranty gives you specific legal rights, and you may also have other rights which vary from state to state. Consult your telephone directory for your local independently-operated Culligan dealer, or write Culligan International Company, for warranty and service information.

Culligan International Company
9399 W. Higgins Road, Suite 1100
Rosemont, Illinois 60018

©2008 Culligan International Company

Andrea Bollinger

From: Andrea Bollinger
Sent: Tuesday, April 23, 2013 7:57 AM
To: Lisa Johnson
Cc: Brad Simons; Josh Cook (jcook@olssonassociates.com); 'Terry Krayenhagen'
Subject: RE: PDF of brine handling paper

Lisa,

Please thank Terry and/or the resident for sending this info. From briefly reading the background section ZLD is something we have looked into. This goes back to the 'concentrating the concentrate.' I attended a Webinar in January that talked about ZLD and the market dynamics and technology trends in brine concentrate. The webinar highlighted:

Although often used to describe a technology consisting of an evaporator and a crystallizer, ZLD is a term that represents a goal. Brine management was a major buzz topic at the Singapore International Water Week and Zero Liquid Discharge (ZLD) is an example of the extreme end of the brine management spectrum in which the brine is reduced down to a solid waste. There are multiple ways of achieving ZLD, with varying costs and complexity. Technologies include crystallizers, dual RO systems, electrodialysis, and membrane distillation just to name a few. As disposal of brine concentrate from water and wastewater treatment facilities becomes increasingly challenging, ZLD and high-recovery technology is expected to see increasing adoption. Most installed ZLD systems are in industrial applications but there is also the potential for use in seawater and brackish water desalination, particularly at inland desalination plants treating brackish groundwater.

- Regulation changes are highlighting the benefit for reusing water
- ZLD units are difficult in estimating cost and performance. Some of the parameters which are challenging include:
    - Calcium carbonate
    - Calcium sulfate
    - Silica
    - Salts
    - Sodium sulfate
    - Magnesium chloride
    - Calcium chloride
- The water is complex to analyze.
- We push against the solubility as the concentrate is further reduced.
- Can be costly to operate because of energy needed.
- Currently a large push for ZLD is being seen in the energy/ oil and gas areas where budgets are larger.

Lisa please let me know if the board has more questions on this or if you need further action.

Thanks,

Andrea Bollinger, EI | Olsson Associates
4690 Table Mountain Drive, Suite 200 | Golden, CO 80403 | 303.237.2072 |
abollinger@olssonassociates.com

From: Terry Krayenhagen [mailto:terry.krayenhagen@gmail.com]
Sent: Monday, April 22, 2013 5:46 PM
To: Lisa Johnson

Cc: Andrea Bollinger
Subject: Fwd: PDF of brine handling paper

Lisa,

One of our residents sent this to me. I believe that Brad looked at this last year, but I'm not sure. It's more pages than I have time to read this week. Can you pass this along to the other Board members tomorrow?

Thanks,

Terry

---------- Forwarded message ----------
From: **Rick3** <hughellis12345@gmail.com>
Date: Mon, Apr 22, 2013 at 5:04 PM
Subject: PDF of brine handling paper
To: "terry.krayenhagen@gmail.com" <terry.krayenhagen@gmail.com>

You need to look at these options for gr north

>
>

EXHIBIT A
SCOPE OF SERVICES & FEE SCHEDULE

As part of the Colorado Department of Public Health and Environment (CDPHE) Solid Waste Regulation, Section 9, the District is required to submit an Annual Report for the concentrate produced and an Engineering Design and Operation Plan (EDOP). The following items (Annual Report and EDOP State Response) are in addition to the existing contract titled *Engineering Design and Operation Plan – Reverse Osmosis Concentrate Ponds,* dated June 5th, 2012.

Annual Report

Olsson Associates is prepared to produce the 2012 Annual Report for the concentrate produced during the 2012 operating year. The 2012 Annual Report shall follow the CDPHE Solid Waste Regulation 6 CCR 1007-2, Section 9.3.5(D). Olsson shall deliver (1) hard copy and (1) CD to the State and (1) hard copy for the District's field files and (1) electronic copy for the District's office copy.

The annual report shall follow the regulation referenced and include:

a. The total volume received of each waste type during the previous calendar year, based on information from the SCADA reports and the assumption the RO unit is 75% efficient.

b. The waste removed from each impoundment during the previous calendar year, not including interbasin transfers, with location details provided for final disposition of the waste. This task shall use the calculated evaporation rate, outlined in the Water Master Plan, Phase II.

c. Any unplanned releases from an impoundment unit at the facility during the previous calendar year.

d. An annual ground water monitoring report, where one is required in the EDOP, and available.

Based on the information available to date, Olsson Associates estimates, on a time and materials basis, the cost to produce the 2012 Annual Report to be $1,200. This includes 11 hours of Andrea Bollinger and 1 hour for Josh Cook.

(This Section Intentionally Left Blank)

EDOP State Response

The District's EDOP was submitted on December 21, 2012 to the CDPHE. The CDPHE has responded in a letter titled *Final Determination: Approval with Conditions*, dated March 21, 2013. Olsson Associates reviewed the letter and is prepared to respond to the State's six conditions. An overview of the six items includes:

1. Operator Information
2. Groundwater Monitoring
3. Record Keeping and Reporting
4. Personnel Training Plan
5. Closure Plan
6. Financial Assurances

Based on the information available to date, Olsson Associates estimates, on a time and materials basis, the cost to respond to the CDPHE's letter and submit a Revised EDOP to be $3,100. This includes 30 hours for an Andrea Bollinger, 3 hours for Josh Cook, attending one (1) meeting for the financial assurances task, producing two (2) hard copy and two (2) electronic copies of the revised EDOP reports. Expenses are included. The budget remaining for the original preparation of the EDOP includes $1,000 for a difference of $2,100.

Prepared By: Andrea Bollinger
Date: 4/29/2013

Greatrock North Water and Sanitation District

Historical Evaporation Pond Depths for April

Date	Pond Level-2013	Pond Level-2012	Pond Level-2011	Pond Level-2010
1-Apr	4.34	4.23	3.71	3.93
2-Apr	4.35	4.21	3.71	3.92
3-Apr	4.35	4.26	3.72	3.91
4-Apr	4.34	4.24	3.72	3.90
5-Apr	4.34	4.22	3.71	3.90
6-Apr	4.33	4.21	3.72	3.89
7-Apr	4.33	4.20	3.72	3.91
8-Apr	4.33	4.21	3.72	3.91
9-Apr	4.34	4.21	3.71	3.90
10-Apr	4.34	4.22	3.72	3.89
11-Apr	4.34	4.23	3.72	3.89
12-Apr	4.34	4.22	3.72	3.88
13-Apr	4.34	4.21	3.73	3.86
14-Apr	4.33	4.23	3.73	3.85
15-Apr	4.37	4.23	3.73	3.84
16-Apr	4.38	4.23	3.72	3.85
17-Apr	4.39	4.22	3.72	3.86
18-Apr	4.39	4.22	3.73	3.86
19-Apr	4.39	4.22	3.73	3.85
20-Apr	4.39	4.21	3.74	3.86
21-Apr	4.39	4.20	3.74	3.86
22-Apr	4.41	4.20	3.72	3.90
23-Apr	4.41	4.20	3.71	4.00
24-Apr	4.42	4.19	3.73	3.99
25-Apr	4.41	4.18	3.76	3.98
26-Apr	4.41	4.22	3.75	3.98
27-Apr	4.40	4.22	3.74	3.97
28-Apr	4.39	4.21	3.74	3.95
29-Apr	4.38	4.21	3.73	3.95
30-Apr		4.20	3.70	3.95