RECORD OF PROCEEDINGS

MINUTES OF A REGULAR MEETING OF THE BOARD OF DIRECTORS OF THE GREATROCK NORTH WATER AND SANITATION DISTRICT HELD APRIL 2, 2013

A regular meeting of the Board of Directors (referred to hereafter as "Board") of the Greatrock North Water and Sanitation District (referred to hereafter as "District") was convened on Tuesday, April 2, 2013 at 5:30 P.M., at United Power, 500 Cooperative Way, Brighton, Colorado. The meeting was open to the public.

ATTENDANCE

Directors In Attendance Were:
Terry Krayenhagen
Robert William Fleck
Jeffrey Polliard
Brian K. Rogers
John D. Wyckoff – Via speakerphone

Also In Attendance Were:
Lisa A. Johnson; Special District Management Services, Inc.

Jennifer Gruber Tanaka, Esq.; White Bear & Ankele, P.C.

Andrea Bollinger and Brad Simons; Olsson Associates, Inc.

Erik Hansen; Adams County Commissioner

Dave Rye; Box Elder Creek Ranch Water Company and Meadow Homes

---

DISCLOSURE OF POTENTIAL CONFLICTS OF INTEREST

Disclosures of Potential Conflicts of Interest: Attorney Tanaka advised the Board that, pursuant to Colorado law, certain disclosures may be required prior to taking official action at the meeting. The Board reviewed the Agenda for the meeting, following which Directors Krayenhagen, Fleck, Polliard, Rogers and Wyckoff each confirmed that they had no conflicts of interest in connection with any of the matters listed on the Agenda.

ADMINISTRATIVE MATTERS

Agenda: Ms. Johnson distributed for the Board's review and approval a proposed Agenda for the District's regular meeting.

Following discussion, upon motion duly made, seconded and, upon vote, unanimously carried, the Agenda was approved, as amended.

Board of Directors' Report: Director Wyckoff reported to the Board that CertaPro Painters has completed the exterior painting project of the Box Elder Creek Ranch facilities and that he has inspected the work and signed off on the project. Director Wyckoff further reported on his recent conversations with Ramey Environmental Compliance, Inc. ("Ramey Environmental") regarding the necessity of a new chemical transfer pump at the Box Elder Creek Ranch Facility. Ms. Johnson reported that Mr. Rabas, with Ramey Environmental, e-mailed her the cost estimate for a new chemical transfer pump in the amount of $830.00 plus shipping costs. Ms. Johnson reported to the Board that she reviewed the cost estimate from Ramey Environmental and approved the purchase and installation of the new chemical transfer pump.

Manager's Report: Ms. Johnson presented and the Board reviewed the April Manager's Report. A copy of the Report is attached hereto and is incorporated herein by this reference.

Presentation from Erik Hansen, Adams County Commissioner, Regarding Growth and Planning within Adams County (the "County"): Commissioner Hansen addressed the Board regarding his vision for the growth and planning within the County and how the County and the District may able to grow together.

Commissioner Hansen also addressed the Board regarding the newly imposed stormwater utility fee. He reported that the fee was based on the amount of permeable surface on each parcel and that, originally, the fee calculations were prepared using satellite technology which captured permeable vs. non-permeable surfaces incorrectly. He further reported that the County staff has corrected this problem by evaluating each property individually by hand. It was noted that the County has also recently approved a resolution which caps the total amount billed to an individual parcel at $750.00 and that a task force has been created to review the stormwater issues and the imposition of the stormwater utility fee.

The Board then discussed with Commissioner Hansen the recent experience they had with the County regarding the unsuccessful request for expansion of the District's service area. Commissioner Hansen reported to the Board that he does not recollect this issue ever coming before the Board of County Commissioners for review. He further reported that in his opinion, the District did not receive due process concerning the expansion of the District's service area and requested that the District re-submit the request to Deputy County Manager, Todd Leopold.

The Board then thanked Commissioner Hansen for taking the time to attend the Board meeting and for the interactive discussion.

Commissioner Hansen left the meeting at this point.

CONSENT AGENDA

The Board considered the following actions:

- Approval of the Minutes from the March 5, 2013 regular meeting.
- Ratify approval of payment of claims through the period ending March 14, 2013, as follows:

General Fund	$ 41,366.56
Debt Service Fund	$ 220.00
Capital Projects Fund	$ 16,640.50
Total Claims:	**$ 58,765.31**

- Ratify acceptance of cash position schedule and unaudited financial statements through the period ending February 28, 2013.
- Consider approval of updated Disclosure Notice for the District.
- Consider approval of Independent Contractor Agreement between the District and Timber Line Electric & Control Corporation for Evaporative Pond Sensor Replacement.

Following discussion, upon motion duly made by Director Polliard, seconded by Director Rogers and, upon vote, unanimously carried, the Board approved the consent agenda items.

ENGINEER'S REPORT

Engineer's Report: Ms. Bollinger presented the April 2, 2013 Engineer's Report to the Board. A copy of the Report is attached hereto and is incorporated herein by this reference.

Evaporation Ponds: The Board reviewed and discussed the scope and fee for the preliminary planning, design and permitting and construction of the third evaporation pond prepared by Olsson Associates, Inc.

Mr. Simons then shared with the Board other ideas regarding concentrate management that he and Director Fleck discussed at a recent lunch meeting. They are as follows:

- Imposing a surcharge on irrigation water use
- Blending concentrate water with irrigation water for Box Elder Creek Ranch Water Company
- Installing non-potable water systems in Greatrock North and Rocking Horse Farms subdivisions
- Cease reverse osmosis treatment and install point of entry units in all homes
- Spray aerator, evaporative tower, concentrate dispersion, etc.

Following a detailed review and discussion, the Board directed staff to research in more detail the viability and costs associated with each of the above-listed items and to present the findings at the next Board meeting.

Location and Costs to Acquire Land for Third Evaporation Pond: This matter was discussed in Executive Session at the end of the meeting.

CAPITAL IMPROVEMENT PROJECTS OPERATIONS AND MAINTENANCE MATTERS

Capital Improvement Projects: There was nothing new to discuss.

Operations and Maintenance Update: The Board reviewed the Monthly Activities Report and operations and maintenance update. A copy of the report is attached hereto and incorporated herein by this reference.

Monthly Flow Report: The Board reviewed the monthly flow report covering February 6, 2013 through March 5, 2013.

Water Quality Issues in Box Elder Creek Ranch and Rocking Horse Farms: The Board reviewed the monthly water quality report.

Exterior Painting of Box Elder Creek Ranch Facilities: It was noted that the exterior painting of Box Elder Creek Ranch Facilities is complete and that this item was discussed under the Board of Directors' Report agenda item above.

LEGAL MATERS

Resolution No. 2013-04-01 Amending the District Rules and Regulations (2012 Reissuance) ("Resolution No. 2013-04-01"): Attorney Tanaka reviewed Resolution No. 2013-04-01 with the Board.

Following discussion, upon motion duly made by Director Polliard, seconded by Director Rogers and, upon vote, unanimously carried, the Board approved Resolution No. 2013-04-01. A copy of the adopted Resolution is attached hereto and is incorporated herein by this reference.

WATER MATTERS

Water Matters: There was nothing new to discuss.

OTHER BUSINESS

Pay Portal and Website: President Krayenhagen reported that he received three emails from residents who were having trouble utilizing the pay portal system. He noted that he had forwarded the information to Ms. Johnson. Ms. Johnson reported that she emailed each resident clarifying the website address and asking for information as to the errors they were receiving. She reported that she has not received any correspondence back from these residents regarding the error issues.

President Krayenhagen and Ms. Johnson discussed that they also received correspondence from Ms. Sherry Greer regarding comments related to the new pay portal fees. Ms. Greer is unhappy with the fees that are assessed when using the site. Ms. Johnson noted that she responded to Ms. Greer with an explanation of the sponsor of the website and reminding her that the pay portal site is just one option in paying her monthly bill; the District continues to accept checks and money orders via the lockbox in addition to walk-in payments at the District's office among other payment options.

COMMUNITY COMMENTS

Community Comments: There were no comments from the community to discuss.

EXECUTIVE SESSION

Location and Costs to Acquire Land for Third Evaporation Pond: EXECUTIVE SESSION: Pursuant to Sections 24-6-402(4) (b) and (e), C.R.S., upon motion duly made by Director Rogers, seconded by Director Polliard and, upon an affirmative vote of at least two-thirds of the quorum present, the Board convened in executive session at 7:45 p.m. for the purpose of discussions relating to negotiations with third parties and receiving legal advice as authorized by Sections 24-6-402(4)(b) and (e), C.R.S.

Furthermore, pursuant to Section 24-6-402(2)(d.5) (II)(B), C.R.S., no record will be kept of those portions of the executive session that, in the opinion of the District's attorney, constitute privileged attorney-client communication pursuant to Section 24-6-402(4)(b), C.R.S.

The Board reconvened in regular session at 8:17 p.m.

ADJOURNMENT

There being no further business to come before the Board at this time, upon motion duly made, seconded and, upon vote, unanimously carried, the meeting was adjourned.

Respectfully submitted,

By _____
Secretary for the Meeting

THESE MINUTES APPROVED AS THE OFFICIAL APRIL 2, 2013 MINUTES OF THE GREATROCK NORTH WATER AND SANITATION DISTRICT BY THE BOARD OF DIRECTORS SIGNING BELOW:

_____
Terry Krayenhagen

_____
Robert William Fleck

_____
Jeffrey L. Polliard

_____
Brian K. Rogers

_____
John D. Wyckoff

ATTORNEY STATEMENT

Pursuant to §24-6-402(2)(d.5)(II)(B), C.R.S., I attest that, in my capacity as the attorney representing the Greatrock North Water and Sanitation District, I attended the executive session convened on April 2, 2013 for the sole purpose of discussing matters subject to negotiation with third parties and matters seeking legal advice, as authorized by §§24-6-402(4)(b) and (e), C.R.S. I further attest that it is my opinion that a portion of the executive session discussion constituted attorney-client privileged communication as provided by §24-6-402(4)(b), C.R.S., and, based on that opinion, no further record, written or electronic, was kept or required by be kept pursuant to §24-6-402(2)(d.5)(II)(B), C.R.S.

_____

Jennifer Gruber Tanaka, Esq.
General Counsel
Greatrock North Water and Sanitation District

GREATROCK NORTH
WATER & SANITATION DISTRICT

Date: March 26, 2013

To: Greatrock North Water and Sanitation District, Board of Directors

From: Lisa A. Johnson, District Manager

Re: April 2, 2013 Manager's Report

Agenda Action Items

II. A. Consent Agenda

1. March 5, 2013 Regular Meeting Minutes.
2. March14, 2013 claims.
3. Financial statements ending February 28, 2013.
4. Consider approval of updated Disclosure Notice
5. Consider approval of an agreement with TLECC for evaporative pond sensor replacement in the south pond.

I recommend approval of the consent agenda items.

VI.A. Consider approval of Resolution No. 2013-04-01 Amending the District Rules and Regulations – this reissuance contains revisions to the specifications and drawings as well as a revision to Section 12.7, Meter Setters. Olsson Associates have provided the revised specifications and drawings and the revised language to Section 12.7.

I recommend approval of Resolution No. 2013-04-01 Amending the District Rules and Regulations.

Updates on Other District Related Items

Potential Land Acquisition for 3rd Evaporation Pond
Summary of Discussions from mid-month meeting with Directors Fleck and Wyckoff – Ms. Bollinger and I met with Directors Fleck and Wyckoff on March 15, 2013. Discussions centered on the evaporative cooling tower idea and the type of fill that will be necessary for the construction of the 3rd pond.

A response was received from Mr. Rye regarding the District's request for an easement just to the north of the current ponds. This response will be discussed in executive session at the board meeting.

Box Elder Creek Ranch Facility Painting – Painting of the facilities is scheduled to begin on Wednesday, March 27, 2013 or Thursday, March 28, 2013.

Total Water Production from February 6, 2013 through March 5, 2013 = 1,327,184
Total Usage billed from February 6, 2013 through March 5, 2013 = 1,667,665

MEMO

TO: Lisa Johnson, District Manager

FROM: Andrea Bollinger

RE: April 2, 2013 Meeting Agenda Items

DATE: March 25, 2013

PROJECT: 013-0055

<u>Item IV.A. – Evaporation Ponds:</u>

1. Third evaporation pond:
    a. Olsson has prepared the attached scope and fee for the preliminary planning, design, and permitting of the third evaporation pond.

    b. Alternative Analysis: Olsson has preliminarily evaluated the excavation needs for the third pond based on two alternatives:
        i. Alternative 1: Hydraulically Equalized
        ii. Alternative 2: Minimize Fill

    Attached is a preliminary layout for the two alternatives and a list of assumptions.

    c. Opinions of Probable Construction Cost (OPCC) were prepared for the two alternatives and are also attached. It was found the cost between the two alternatives is almost negligible primarily because where we minimize fill we are increasing the surface area therefore the amount of liner needed. The OPCC excludes professional services and land acquisition cost and reflects the costs of a publically bid project.

    Key differences from original OPCC to current:
    - Size:
        - Original was based on a pond of 290 feet x 290 feet with 4 feet of working depth.
        - Current is based on a pond of 657 feet x 323 feet with 4 feet of working depth.
            - This is because we are in a floodplain and the bank must be above the 100-year flood elevation.

- Excavation
  - Original assumed balanced cut and fill and utilizing on-site material.
  - Current requires all fill material to be brought onsite.

- Fencing
  - Original reflected fencing one pond only.
  - Current fences all three ponds.

- Level Sensor
  - Original reflected one level sensor for the one pond only.
  - Current includes two level sensors (one for pond 2 and one for the proposed 3rd pond) in addition to 3 staff gages for manual pond depth recording.

<u>Additional Engineering Items</u>

- Evaporation Pond EDOP:
  - Olsson attended the Section 9 Stakeholder meeting with the Solid Waste Division on March 13, 2013.
  - During the meeting we discussed Section 9.3.5 Record Keeping and Reporting Part D Annual Reporting. According to the regulations, all facilities shall submit an annual report by March 1st. The majority of the Stakeholders were not aware the State required the annual reports for 2012 to be submitted since most facilities either aren't aware of the types of impoundments at their sites or do not have any approved IPCR or EDOP.
    - Since the Section 9 meeting, the State has issued a onetime extension for the 2013 year for the annual reports. Attached is a copy of the letter.
    - Greatrock has until June 30, 2013 to submit an annual report for 2012.
    - Attached is an excerpt from the Regulations which dictates what is to be included in the annual report.

- Crystalluria Research:
  - Attached is the information I found regarding Crystalluria.

- Reserve Analysis:
  - All major vendors and reps have been contacted and Olsson is compiling data.
  - Field notes from the site visit are being compiled and will be provided to Ramey so the Almax system may be updated.

(This section intentionally left blank)

Brad Simons and I will attend the April 2, 2013 Board Meeting and will be prepared to address any of these items, as well as any additional items that may arise.

Attachments:

- Scope and fee for design and permitting of the 3rd evaporation pond
- Assumptions for Item IV.A 1. B: Alternative Analysis
- Alternative 1: Hydraulically Equalized
- Alternative 2: Minimize Fill
- 3rd Evaporation Pond Opinions of Probable Construction Cost Alternative 1
- 3rd Evaporation Pond Opinions of Probable Construction Cost Alternative 2
- 2013-03-19_Annual_Report_Deadline_Extension_PDF
- Pages from REGULATIONS PERTAINING TO SOLID WASTE SITES AND FACILITIES
- Crystalluria Research

File Location:
G:\Office\Teams\WaterWastewater\Denver Team Folder\Greatrock North Water and Sanitation District\Board Meetings\2013\04-2013\2013-03-25_Engineering Report.docx

EXHIBIT A
SCOPE OF SERVICES AND FEE SCHEDULE

GENERAL

Olsson shall perform for Client professional services in all phases of the Project to which this Agreement applies as hereinafter provided. These services will include serving as Client's professional representative for the Project, providing professional consultation and advice, and furnishing customary services incidental thereto.

Greatrock North Water and Sanitation District (Client) located in Adams County, Colorado utilizes reverse osmosis (RO) for partial treatment of their drinking water wells. The concentrate from the RO treatment is sent via gravity to two existing evaporation ponds. In order to increase operations flexibility and redundancy, the Client would like to construct a third evaporation pond.

The Third Evaporation Pond project involves preliminary planning, design, identifying funding sources, permitting, and construction phase services. The main tasks include the designing and permitting of the new evaporation pond located north of the existing evaporation ponds, see Exhibit 1 for layout and location. The following provides a more detailed scope of services.

Phase 100- Project Management and Meetings

1. Coordinate with Client's representative for the project via email and phone calls.
2. Provide general administrative services to manage and support the planning, design, permitting, and construction administration of the new evaporation pond, assuming an overall duration of 100 weeks.

Project Management and Meetings Fee $19,644

Phase 200- Preliminary Planning Services

The preliminary planning services involve the efforts associated with conceptualization of the third evaporation pond. The pond size shall be evaluated based on the following RO blending ratios, 50/50, 60/40, 70/30, and 0/100 (untreated well water/reverse osmosis permeate). It shall also include the updating of construction costs based on the agreed upon conceptual layout and 50/50 blending ratio pond size, see attached Exhibit 1.

Preliminary meetings shall be conducted with Adams County and State of Colorado's Hazardous Materials and Waste Management Program in order to determine the viability of constructing within the existing floodplain and to identify the permitting needs. The preliminary planning services phase includes the efforts performed during this conceptual stage from January 1, 2013 through March 31, 2013.

Preliminary Planning Services Fee $5,442

Phases 300 through 900 shall be for a defined project site as agreed upon based upon a 50/50 blending ratio (untreated well water/reverse osmosis permeate).

Phase 300- Planning Phase Services

Task 300001- Additional Survey

1. Additional survey information will be incorporated into the drawings referenced in the contract between Olsson and Client, signed and dated January 23, 2013 and titled *Third Evaporation Pond Topography and Access Road Survey Services*.

   The additional topographic survey shall include the following:

   a. The remaining four acres of the 7.35 acres including the drainage swale northwest of the proposed third evaporation pond.
   b. Cross sections will be taken across the north and south existing evaporation pond by using a boat or canoe. A blunt tipped rod will be used to ensure the liner will not be punctured.
   c. The additional access road area from East 167th Drive cul-de-sac to East 168th Avenue.

2. Establishing three control points for future construction use.

Task 300002- Geotechnical Investigation and Report

Engage a qualified third party testing agency to perform three (3) soil borings on the agreed upon proposed evaporation pond site and produce one geotechnical report with their findings. Olsson shall review the geotechnical report prepared by the third party testing agency. (It is assumed the contract for the third party testing agency will be between the Client and the testing agency.)

Task 300003- Property Acquisition

Specific task items and estimated fee shall be submitted for approval prior to execution of work. Work for this phase will be done on current hourly rates based on a time and expenses basis.

Task 300004- Pond Elevation Analysis

Create a preliminary grading plan based on the topographical survey described in Task 300001. A cost analysis will be performed evaluating two options for the third pond.

- Option 1 is having the elevation of the third pond equal to the existing two evaporation ponds.
- Option 2 is having the third pond be lower than the existing two evaporation ponds and transferring water from the third lower pond to the two upper ponds via a rented or Client owned pump.

Results of the opinion of cost for the two options will be presented to the Client. A decision from the Client will be required prior to proceeding to Phase 400 – Design Phase Services.

Task 300005- Army Corp of Engineers 404 Permit Investigation

Conduct one (1) site visit with Army Corp of Engineers in order to determine if a 404 Permit is necessary. If a 404 permit is deemed necessary by the Army Corp of Engineers additional costs will be incurred and are not reflected in this proposal.

Planning Phase Services Fee $5,864

Phase 400- Design Phase Services

The design of the third evaporation pond will included the following:

1. Geomembrane liner,
2. One lysimeter,
3. Two monitoring wells,
4. Site piping modifications,
5. Evaluation of up to three (3) discharge options into the third evaporation pond with the focus on enhancing evaporation through passive technologies such as rip-rap and increased surface area.
6. Level sensor integrated into the existing SCADA system for the existing second evaporation pond and the proposed third evaporation pond including evaluating the electrical needs to determine if upsizing of the electrical service is needed.
7. Three (3) staff gages which can be used to manually gage each evaporation pond's depths. Create a hard copy template for manually recording the pond depths during site visits as part of the annual reporting to the State.
8. Design of a security fence that surrounds the first, second, and third evaporation ponds.
9. Design of a north access road which includes minor grading and drainage modifications.
10. Drainage design will incorporate the flows coming from the existing swale from the west along with the proposed evaporation pond grading and new access road.
11. Landscape design to include trees and bushes around the site that are not located on the berms. This excludes designing of surface landscaping such as rock outcrops, mulch, edging, and drip irrigation system.
12. Create detailed drawings and a project manual for third evaporation pond based on the 50/50 blending ratio and the option chosen in Task 300004.
13. Provide three (3) sets of drawings and project manual to the Client for review at 60 percent. As part of the review of the submittal, meet with staff to discuss their review comments and resolve any questions
14. Perform an "in-house" quality control review of drawings and project manual at 90 percent completion.
15. Create an opinion of probable construction cost for the project.

Design Phase Service Fee $22,920

Phase 500- Funding Phase Services

Specific task items and estimated fee shall be submitted for approval prior to execution of work. Work for this phase will be done on current hourly rates based on a time and expenses basis.

Phase 600- Permitting Phase Services

Task 600001- Land Use Approvals

Upon completing Phase 300 and a decision has been made regarding which pond option to pursue, a Conceptual Review Meeting will be requested with Adams County. The required documents will be prepared and submitted to the County. Following the meeting, the County will provide written comments regarding the plan. Upon receipt of those comments specific task items and estimated fee shall be submitted for approval prior to execution of the work.

Task 600002- Conditional Letter of Map Revision

The proposed evaporation pond is located within the Box Elder Creek 100-year floodplain. A Conditional Letter of Map Revision (CLOMR) is requested to receive FEMA's comment on the proposed changes. Following construction of the pond, an as-built survey and Letter of Map Revision (LOMR) will be required.

The following tasks are proposed in support of these efforts.

A. Prepare pre- and post-project (proposed conditions) floodplain models

1. Obtain and review effective floodplain model. It is assumed the model will be the HEC-RAS model prepared for the 2001 Lower Box Elder Creek Flood Hazard Area Delineation (FHAD).

2. Prepare duplicate effective HEC-RAS model.

3. Generate cross sections from the existing grading using mapping obtained from the Urban Drainage and Flood Control District and prepare a corrected effective HEC-RAS model. The current effective model does not include the existing ponds.

4. Delineate the existing conditions (pre-project) floodplain.

5. Generate cross sections from the proposed grading and develop a post-project (proposed conditions) HEC-RAS model.

6. Run the pre- and post-project HEC-RAS models with the flows developed for the current Box Elder Creek (Downstream of Jewell Avenue) Major Drainageway Plan and FHAD. This effort is for the benefit of Adams County. Compare the results and identify the floodplains in the near vicinity of the project.

7. Document the findings of the new hydrology analysis in a technical memorandum.

B. Prepare Conditional Letter of Map Revision (CLOMR)

1. Delineate the post-project 100-year and future Zone X floodplains, develop floodway, and develop workmaps.

2. Prepare 10-, 50-, and 100-year and future Zone X flood profiles.

3. Prepare annotated FIRM panel depicting the revised floodplain.

4. Prepare floodplain/base flood elevation comparison tables required for submittal.

5. Prepare annotated floodway table.

6. Prepare agreement table.

7. Prepare report narrative describing the project and documenting floodplain models and results.

8. Prepare the FEMA MT-2 application forms for a CLOMR.

9. Prepare letters to affected property owners explaining impacts to their properties.

10. Obtain documentation of compliance with the Endangered Species Act. ERO Resources Corporation will assist Olsson in obtaining the clearance. Their services will consist of a site visit to confirm site conditions and submitting a request for a full clearance.

11. Submit documents to Greatrock for review and address one set of review comments.

12. Submit documents to Adams County for review and signature and address one set of review comments.

13. Submit two copies of the documents to FEMA and address one set of review comments or provide additional information.

14. Quality assurance and control, project coordination, invoices, and status updates.

15. FEMA's review fee for a CLOMR based on a structural measure such as a pond, is $6,050, and is included in the fee proposal.

Task 600003- County Floodplain Compliance Permit

Prepare application and supporting documents for Floodplain Compliance Permit using the analysis and documentation prepared in Tasks 600002 A and B.

Task 600004- Revised EDOP, including CQAP

During the design phase, Olsson shall conduct two (2) review meetings with the State to discuss the proposed facility prior to final submittal. Upon completion of the design and the County's approval of the CLOMR, Olsson shall submit a revised Engineering Design and Operation Plan (EDOP) to the State for approval. In addition to the revised EDOP Olsson shall prepare a Construction Quality Assurance Plan (CQAP).

The EDOP shall include the information originally prepared and submitted to the State on 12/21/2012 along with the construction drawings and specifications for the proposed third pond. The CQAP will outline the procedures and quantities for testing during construction to ensure the evaporation pond is constructed as proposed.

Permitting Phase Services Fee $30,851

Phase 700- Bidding Phase Services

Task 700001- Advertise for Bids

Prepare documentation necessary for advertising bids and issuances by the Client.

Task 700002- Pre-Bid Conference and Addenda

Attend one (1) pre-bid conference and prepare meeting minutes and addendum.

Task 700003- Bid Opening, Tabulation, and Recommendation of Award

Attend one (1) bid-opening, review bids, and make a recommendation of award to the Client.

Task 700004- Notice of Award and Contract

Process the Notice of Award and Contract Documents and create six fully executed Contract Documents, two for the Client, three for the Contractor, and one for Olsson.

Bidding Phase Services Fee $5,542

Phase 800- Construction Phase Services

Task 800001- Notice to Proceed

Prepare the Notice to Proceed documents for issuance by the Client.

Task 800002- Pre-Construction Conference

Attend one (1) pre-construction conference and prepare meeting minutes. The pre-construction conference shall review contract requirements and protocols.

Task 800003- Submittal Review

Review the submittals provided by the Contractor. A maximum of two (2) reviews per submittal will be performed. Any additional reviews will be done a time and materials basis.

Task 800004- Construction Observation

Visit the site twice a week for a total of 20 weeks of construction. Each visit is budgeted for 8 hours, door-to-door.

Task 800005- Progress Meetings

Attend a total of 10 bi-weekly construction progress meetings with the Contractor, based on a total of 20 weeks of construction.

Construction Phase Services Fee $43,106

Phase 900- Post Construction Phase Services

Task 900001- Record ("As-Built") Drawings

Upon completion of construction, Olsson shall take the redline comments provided by the Contractor and prepare as-built record drawings. Olsson shall provide one (1) full size copy, one (1) half-size copy and, one (1) electronic copy for Client office records.

Task 900002- Letter of Map Revision

Prepare Letter of Map Revision (LOMR)

1. After construction, conduct topographic survey of pond. Survey must be certified by a professional land surveyor.

2. Develop as-built plans.

3. Generate cross sections from as-built mapping and develop an as-constructed/post-project HEC-RAS model.

4. Delineate the post-project 100-year and future Zone X floodplain, develop floodway, and develop workmaps.

5. Prepare 10-, 50-, and 100-year and future Zone X flood profiles.

6. Prepare annotated FIRM panel depicting the revised floodplain.

7. Prepare floodplain/base flood elevation comparison tables required for submittal.

8. Prepare annotated floodway table.

9. Prepare agreement table.

10. Prepare report narrative describing the project and documenting floodplain models and results.

11. Prepare the FEMA MT-2 application forms for a LOMR.

12. Submit documents to Greatrock for review and address one set of review comments.
13. Submit documents to Adams County for review and signature and address one set of review comments.

14. Submit two copies of the documents to FEMA and address one set of review comments or provide additional information.

15. Quality assurance and control, project coordination, invoices, and status updates.

16. FEMA's review fee for a LOMR based on a previously-approved CLOMR is $5,000, and is included in the fee proposal.

Task 900003- Construction Quality Assurance Report

The Construction Quality Assurance Report (CQAR) will be submitted to the State upon completion of the project and will include to documentation verifying the testing quantities and frequencies proposed in the CQAP referenced in Task 600004 were executed to ensure the evaporation pond was constructed as proposed.

Post Construction Phase Services Fee $21,966

Overview of Phases

	Phase	Cost	
100	Project Management and Meetings	19,644	
200	Preliminary Planning Services	5,442	
300	Planning Phase Services	5,864	**
400	Design Phase Services	22,920	
500	Funding Phase Services (T&M)	0	**
600	Permitting Phase Services	30,851	**
700	Bidding Phase Services	5,542	
800	Construction Phase Services	43,106	
900	Post Construction Phase Services	21,966	
		155,335	

**Phase includes tasks for which a scope and fee proposal will be prepared when the scope is defined

ASSUMPTIONS AND CLARIFICATIONS

1. Specific task items and estimated fee shall be submitted for approval prior to execution of work and will be based on current hourly rates based on a time and materials basis.
2. Phase 100 assumes a project duration of 100 weeks.

3. Task 300002 assumes the contract for the third party testing agency will be between the Client and the testing agency.
4. Phase 800 assumes a construction period of 20 weeks.
5. Task 800005 assumes the bi-weekly progress meetings will be conducted during one of the weekly site visits to minimize costs to the Client.
6. The amended EDOP and CQAR can be submitted to the State after Adam County's approval of the CLOMR.
7. The State review of the EDOP and CQAR will take a maximum of 180 days, (30 days for a completeness review and 150 days for a technical review.

CLOMR/LOMR

1. Pond design and contours will be provided as part of separate Olsson Associates effort.
2. The effective floodplain model will be available as an electronic HEC-RAS model. If the effective model is a HEC-2 or a hard copy printout, additional time will be required. If the effective model is not available through Adams County or Urban Drainage and Flood Control District, FEMA must be contacted and will charge a minimum of $150.
3. Olsson will make every practicable effort to coordinate with FEMA and obtain the CLOMR for the project site; however, as CLOMRs are dependent on FEMA regulations and site conditions, we cannot guarantee that the CLOMR will be approved by FEMA.
4. If FEMA requires significant revisions to the submittals or requests additional information that requires significant effort to compile, a separate agreement would be required to proceed with the additional work.

SCHEDULE

1. See attached schedule outline of work.

CLOMR/LOMR

1. This scope of services can begin upon receipt of pond design.
2. The HEC-RAS modeling and CLOMR application can be prepared within six weeks.
3. The CLOMR must then be submitted to Adams County for review and signature. If they have comments, it can be assumed that their review, Olsson's modifications, and Adams County's re-review could take one to two months.
4. Processing of the CLOMR by FEMA is estimated to take no less than 120 days.
5. The LOMR will take place after construction of the pond.

ADDITIONAL COSTS NOT INCLUDED

1. Property Acquisition (T&E Basis)
2. Funding Phase (T&E Basis)
3. Geotechnical Investigation and Report
4. 404 Permitting, if necessary

DWG: G:\Office\Teams\WaterWastewater\Denver Team Folder\Greatrock North Water and Sanitation District\Proposals\L13-0074 GNWSD 3rd Pond\L130034_Exhibit 1.dwg USER: abollinger
DATE: Mar 20, 2013 10:25am XREFS: 30212_PLCTN L130034_TBLK22X34 Greatrock Ponds_Survey 30212_IMAGE _FADE

OLSSON ASSOCIATES
4690 Table Mountain Drive, Suite 200
Golden, CO 80403
TEL 303.237.2072
FAX 303.237.2659
www.oaconsulting.com

NOTE
THIS DOCUMENT HAS BEEN RELEASED BY OLSSON ASSOCIATES ONLY FOR REVIEW BY REGULATORY AGENCIES AND OTHER PROFESSIONALS, AND IS SUBJECT TO CHANGE. THIS DOCUMENT IS NOT TO BE USED FOR CONSTRUCTION.

OLSSON ASSOCIATES ASSUMES NO RESPONSIBILITY FOR EXISTING UTILITY LOCATIONS (HORIZONTAL OR VERTICAL). THE EXISTING UTILITIES SHOWN ON THIS DRAWING HAVE BEEN PLOTTED FROM THE BEST AVAILABLE INFORMATION. IT IS HOWEVER THE RESPONSIBILITY OF THE CONTRACTOR TO FIELD VERIFY THE LOCATION OF ALL UTILITIES PRIOR TO THE COMMENCEMENT OF ANY CONSTRUCTION ACTIVITIES.

REV. NO.	DATE	REVISIONS DESCRIPTION

REVISIONS

THIRD EVAPORATION POND (50/50 BLEND) AND SECONDARY ACCESS RAOD

GREATROCK NORTH W&S DISTRICT EVAPORATION POND

ADAMS COUNTY, COLORADO

2013

drawn by:	ALB
checked by:	DPK
approved by:	DPK
QA/QC by:	BAS
project no.:	L13-0034
drawing no.:	L130034 EXHIBIT 1
date:	03.20.2013

EXHIBIT
1

GNWSD: Third Evaporation Pond- Preliminary Schedule

	Weeks																								
	1	2	3	4	5	6	7	8	9	10	11	12-19	20-36	37-45	46-49	50	51	52-71	72-75	76-83	84-100
	20-45																		Post Construction		
Planning																					
Survey	1 week																				
Geotechnical	4 weeks																				
Fill Sources	2 week																				
Design																					
Grading/Details			6 weeks																		
Model/CLOMR						6 weeks															
LOMR- post const.																			4 weeks		
Funding																					
DOLA- EMIA [1]																					
Intended Use Plan [2]																					
USDA- Rural Development																					
Permitting																					
County- CLOMR												Up to 8 weeks									
County- LOMR																				Up to 8 weeks	
State													6 months [3]								
FEMA- CLOMR													Up to 120 days								
FEMA- LOMR																					Up to 120 days
Bidding																					
Invitation To Bidders															4 weeks						
Pre-Bid Meeting															1 day						
Bid Opening																1 day					
Notice of Award																1 day					
Construction																					
Notice to Proceed																2 weeks					
Construction																		20 weeks			

Notes:

(1) Energy Mineral Impact Assistance Program: Apr 1, Aug 1, Dec 1 submittal deadlines- have 6 months (24 weeks) from award to begin construction

(2) State of Colorado Drinking Water Revolving Fund: Intended use Plan: Grants applications will be accepted between January 1 and January 31 of each year. Starting February 1, all applications will be prioritized according to the criteria set forth below and awards will be made in rank order until all grants have been expended. If there are more grants than applications, additional application deadlines will be solicited. If the entity does not seek funding through the DWRF, they may be requested to repay the grant or seek a waiver of the repayment requirement from the Authority Board.

(3) Based on conversations with the State, the regulations do not outline a specific timeline for review. However, the State strives to follow the timeline outlined for Certificate of Designation which allows for a 30 day completeness review and 150 days for a technical review. A Construction Quality Assurance (CQA) and Engineering Design and Operations Plan (EDOP) will need to be submitted and approved by the State.

Date Last Updated: March 13, 2013

G:\Office\Teams\WaterWastewater\Denver Team Folder\Greatrock North Water and Sanitation District\Proposals\L13-0074 GNWSD 3rd Pond\Documents\Contracts\Full Scope\[Prelim Schedule.xlsx]2013-03-13 Schedule

March 21, 2013

Assumptions for Item IV.A 1. B: Alternative Analysis for grading of 3rd Evaporation Pond for Greatrock North:

- Assumed the 100-year floodplain is at elevation 5071.0. Therefore, the top of the embankments were placed at 5072.0.
- Side slopes at 3:1.
- Flat bottom of pond.
- Assumed Ponds 1 and 2 have a pond bottom of 5063.2.
- The surveyed topography was extended to the northeast in order to obtain an approximate fill quantity.
- It is assumed the drainage swale, located along the northwest side of third pond, would need to be preserved and as a result the embankment grading was kept out of the drainage swale.
- Hydrology was not completed at this time.
- It is assumed the swale will need to be armored up to the 100-year elevation mark of the local drainage flows.
- It is assumed the liner will have a 3-foot trench on all sides.

ALTERNATIVE 1: HYDRAULICALLY EQUALIZED

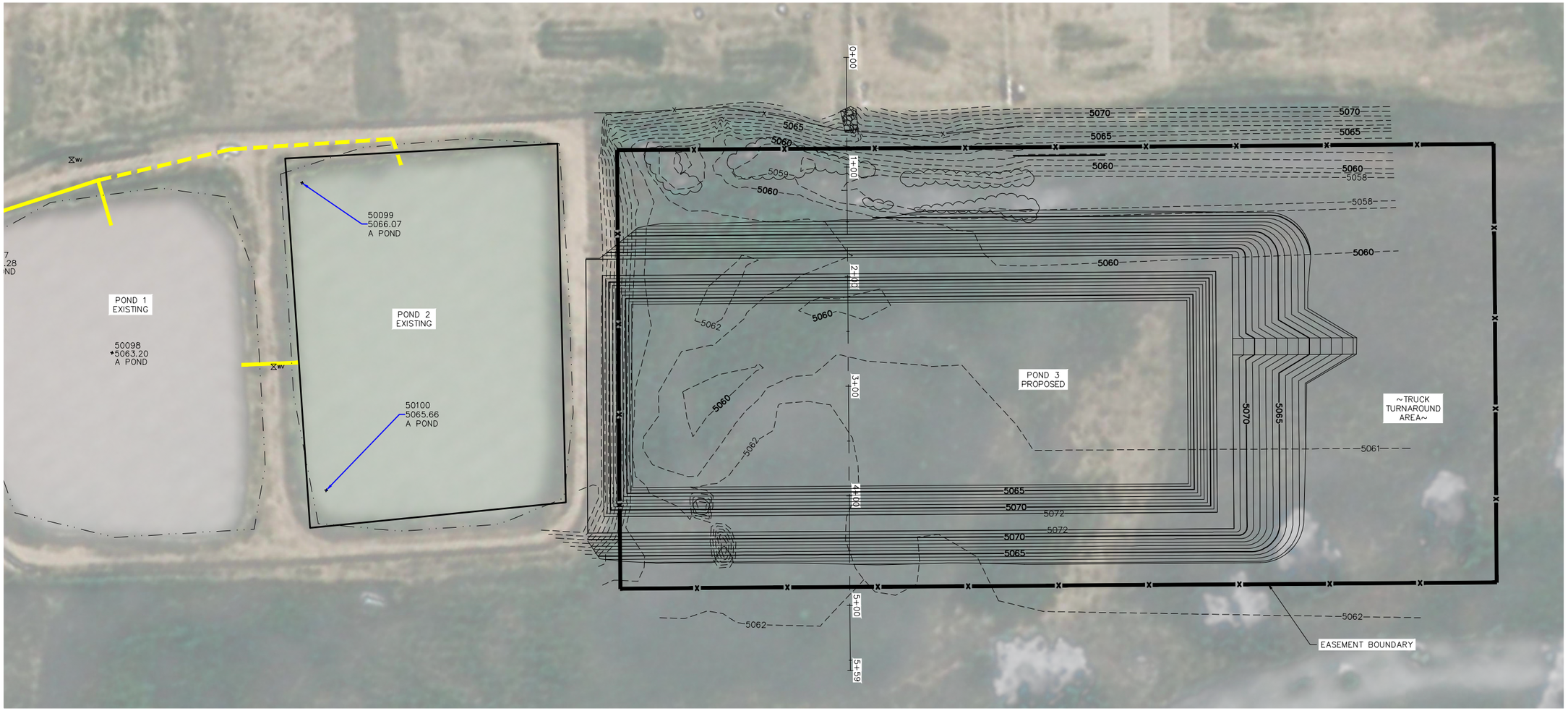

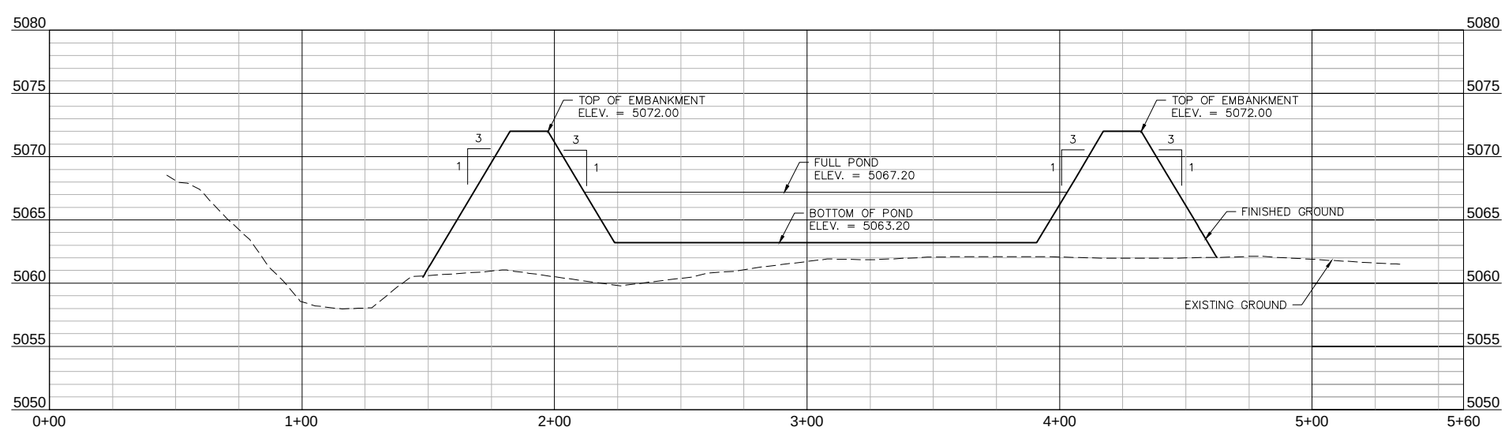

N

1" = 50'

0' 25' 50' 100'

SCALE IN FEET

OLSSON ASSOCIATES

4690 Table Mountain Drive, Suite 200
Golden, CO 80403

TEL 303.237.2072
FAX 303.237.2659

www.oaconsulting.com

NOTE
THIS DOCUMENT HAS BEEN RELEASED BY OLSSON ASSOCIATES ONLY FOR REVIEW BY REGULATORY AGENCIES AND OTHER PROFESSIONALS, AND IS SUBJECT TO CHANGE. THIS DOCUMENT IS NOT TO BE USED FOR CONSTRUCTION.

OLSSON ASSOCIATES ASSUMES NO RESPONSIBILITY FOR EXISTING UTILITY LOCATIONS (HORIZONTAL OR VERTICAL). THE EXISTING UTILITIES SHOWN ON THIS DRAWING HAVE BEEN PLOTTED FROM THE BEST AVAILABLE INFORMATION. IT IS HOWEVER THE RESPONSIBILITY OF THE CONTRACTOR TO FIELD VERIFY THE LOCATION OF ALL UTILITIES PRIOR TO THE COMMENCEMENT OF ANY CONSTRUCTION ACTIVITIES.

REV. NO.	DATE	REVISIONS DESCRIPTION

REVISIONS

THIRD EVAPORATION POND
ALTERNATIVE 1: HYDRAULICALLY EQUALIZED

GREATROCK NORTH W&S DISTRICT
EVAPORATION POND

ADAMS COUNTY, COLORADO

2013

drawn by: MQ
checked by:
approved by:
QA/QC by:
project no.: 013-0212
drawing no.: ALT-1
date: 03.21.2013

SHEET
1

DWG: F:\Projects\013-0212 GNWSD 3rd Evap Pond_PBIN\Conceptual_Plans\30212_Optn6_access rev 2_MO_ALT1.dwg USER: abollinger
DATE: Mar 22, 2013 1:08pm XREFS: 30212_FLPL 30212_PLCTN 30212_TBLK22X34 Greatrock Ponds 30212_IMAGE _FADE

ALTERNATIVE 2: MINIMIZE FILL

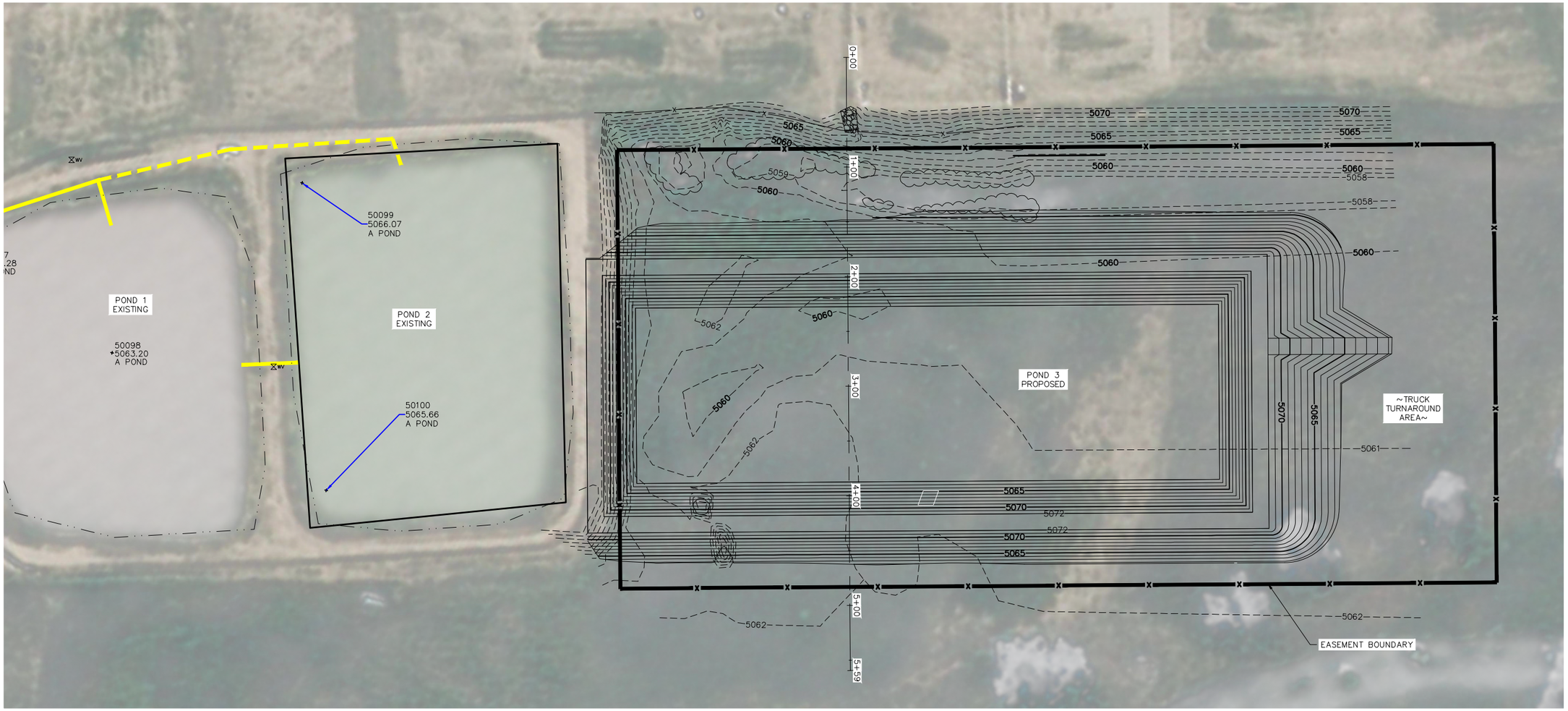

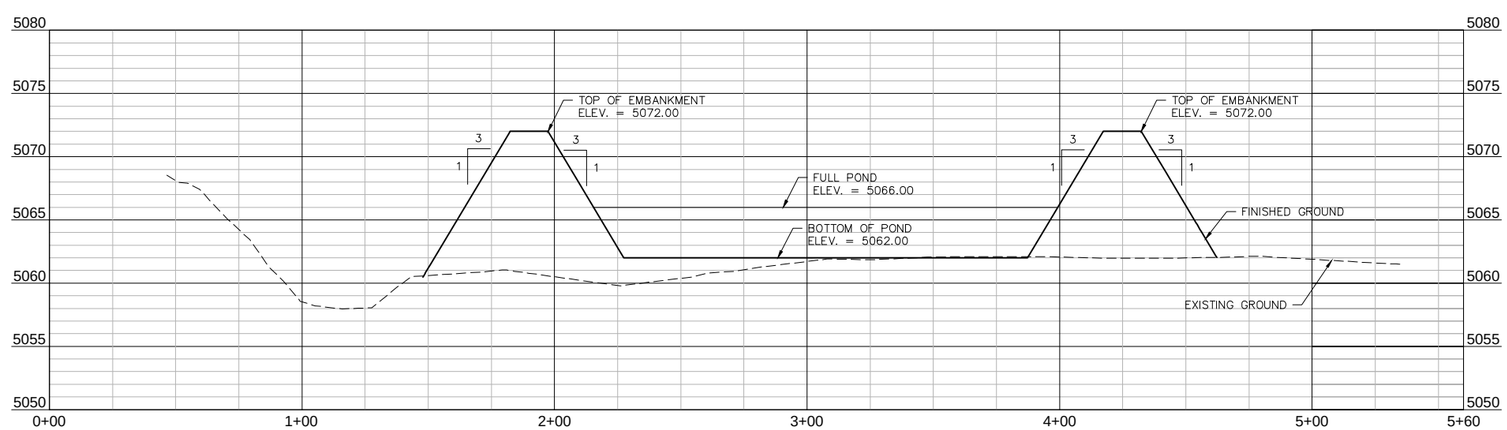

N

1" = 50'

0' 25' 50' 100'

SCALE IN FEET

OLSSON ASSOCIATES

4690 Table Mountain Drive, Suite 200
Golden, CO 80403

TEL 303.237.2072
FAX 303.237.2659

www.oaconsulting.com

NOTE
THIS DOCUMENT HAS BEEN RELEASED BY OLSSON ASSOCIATES ONLY FOR REVIEW BY REGULATORY AGENCIES AND OTHER PROFESSIONALS, AND IS SUBJECT TO CHANGE. THIS DOCUMENT IS NOT TO BE USED FOR CONSTRUCTION.

OLSSON ASSOCIATES ASSUMES NO RESPONSIBILITY FOR EXISTING UTILITY LOCATIONS (HORIZONTAL OR VERTICAL). THE EXISTING UTILITIES SHOWN ON THIS DRAWING HAVE BEEN PLOTTED FROM THE BEST AVAILABLE INFORMATION. IT IS HOWEVER THE RESPONSIBILITY OF THE CONTRACTOR TO FIELD VERIFY THE LOCATION OF ALL UTILITIES PRIOR TO THE COMMENCEMENT OF ANY CONSTRUCTION ACTIVITIES.

REV. NO.	DATE	REVISIONS DESCRIPTION

REVISIONS

THIRD EVAPORATION POND
ALTERNATIVE 2: MINIMIZE FILL

GREATROCK NORTH W&S DISTRICT
EVAPORATION POND

ADAMS COUNTY, COLORADO

2013

drawn by: MQ
checked by:
approved by:
QA/QC by:
project no.: 013-0212
drawing no.: ALT 2
date: 03.21.2013

SHEET
2

DWG: F:\Projects\013-0212 GNWSD 3rd Evap Pond_PBIN\Conceptual_Plans\30212_Optn6_access rev 2_MO_ALT2.dwg USER: abollinger
DATE: Mar 22, 2013 1:33pm XREFS: 30212_FLPL 30212_PLCTN 30212_TBLK22X34 Greatrock Ponds 30212_IMAGE _FADE

Opinion of Probable Construction Cost- Alt 1

		ENR Construction Cost Index	
Client: Greatrock North Water and Sanitation District		Date	Index
Project Title: Third Evaporation Pond	Initial	Mar-13	6992.25
Project Number: L13-0074	Current	Mar-13	6992.25

	Item	Quantity	Unit	Unit Cost $	Cost $
1	*Third Pond based on 50/50 Blending*				
2	Excavation	100	CY	8.00	800
3	Embankment, Fill	34,500	CY	15.00	517,500
4	Security Chain Link Fencing at top of berm	3,100	LF	16.00	49,600
5	Fencing Removal	1,870	LF	4.50	8,420
6	Passive Evaporation Technologies, rip-rap Type L	200	CY	63.00	12,600
7	Drainage Swale Rip-Rap, Type H	1,600	CY	74.00	118,400
8	*Water Level Monitoring*				
9	Level Sensor (2) and SCADA integration	1	LS	6,000.00	6,000
10	Electrical Upgrades	1	LS	10,000.00	10,000
11	Manual Staff Gages	3	EA	1,000.00	3,000
12	*Piping*				
13	4" PVC Pipe	900	LF	14.00	12,600
14	*Geotechnical Services*				
15	Geomembrane Liner and Fabric	134,650	SF	2.10	282,770
16	Groundwater Monitoring Wells (2) and Leak Detection	1	LS	14,000.00	14,000
17	Material Testing	1	LS	3,000.00	3,000
18	*Erosion Control & Seeding*	1	LS	30,000.00	30,000
19	*Moblization and Demoblization*	1	LS	50,000.00	50,000
20	Construction Surveying	1	LS	10,000.00	10,000
21					
22					
23					
24					
25					

	SUBTOTAL	$ 1,128,690
Construction Contingency	20.0 %	$225,740
Total Project Construction Cost		$ 1,354,430

Design Status (Check One)

- [x] Conceptual Design
- [ ] Preliminary Design
- [ ] Final Design

OLSSON ASSOCIATES

Project Engineer: Andrea Ballinger Date: 3/25/2013

The Engineer, using his or her professional judgment, has developed this stated Opinion of Probable Construction Cost based upon the design status identified above. Development of this Opinion has included consideration of design input level; however, the circumstances under which the work is expected to be undertaken, the cost and availability of materials, labor and services, probable bidder response and the economic conditions at the time of bid solicitation are beyond the control of the Engineer and will impact actual bid costs. Should bidding be delayed, these costs should be reviewed and, if necessary, adjusted to a more applicable *Engineering News Record* Construction Cost Index.

Opinion of Probable Construction Cost- Alt 2

		ENR Construction Cost Index	
Client: Greatrock North Water and Sanitation District		Date	Index
Project Title: Third Evaporation Pond	Initial	Mar-13	6992.25
Project Number: L13-0074	Current	Mar-13	6992.25

	Item	Quantity	Unit	Unit Cost $	Cost $
1	*Third Pond based on 50/50 Blending*				
2	Excavation	100	CY	8.00	800
3	Embankment, Fill	32,300	CY	15.00	484,500
4	Security Chain Link Fencing at top of berm	3,120	LF	16.00	49,920
5	Fencing Removal	1,870	LF	4.50	8,420
6	Passive Evaporation Technologies, rip-rap Type L	200	CY	63.00	12,600
7	Drainage Swale Rip-Rap, Type H	1,600	CY	74.00	118,400
8	*Water Level Monitoring*				
9	Level Sensor (2) and SCADA integration	1	LS	6,000.00	6,000
10	Electrical Upgrades	1	LS	10,000.00	10,000
11	Manual Staff Gages	3	EA	1,000.00	3,000
12	*Piping*				
13	4" PVC Pipe	900	LF	14.00	12,600
14	*Geotechnical Services*				
15	Geomembrane Liner and Fabric	142,500	SF	2.10	299,250
16	Groundwater Monitoring Wells (2) and Leak Detection	1	LS	14,000.00	14,000
17	Material Testing	1	LS	3,000.00	3,000
18	*Erosion Control & Seeding*	1	LS	30,000.00	30,000
19	*Moblization and Demoblization*	1	LS	50,000.00	50,000
20	Construction Surveying	1	LS	10,000.00	10,000
21					
22					
23					
24					
25					

	SUBTOTAL	$ 1,112,490
Construction Contingency	20.0 %	$222,500
Total Project Construction Cost		$ 1,334,990

Design Status (Check One)

- [x] Conceptual Design
- [ ] Preliminary Design
- [ ] Final Design

OLSSON ASSOCIATES

Project Engineer: Andrea Bolling Date: 3/25/2013

The Engineer, using his or her professional judgment, has developed this stated Opinion of Probable Construction Cost based upon the design status identified above. Development of this Opinion has included consideration of design input level; however, the circumstances under which the work is expected to be undertaken, the cost and availability of materials, labor and services, probable bidder response and the economic conditions at the time of bid solicitation are beyond the control of the Engineer and will impact actual bid costs. Should bidding be delayed, these costs should be reviewed and, if necessary, adjusted to a more applicable *Engineering News Record* Construction Cost Index.

STATE OF COLORADO

John W. Hickenlooper, Governor
Christopher E. Urbina, MD, MPH
Executive Director and Chief Medical Officer

Dedicated to protecting and improving the health and environment of the people of Colorado

4300 Cherry Creek Dr. S.
Denver, Colorado 80246-1530
Phone (303) 692-2000
Located in Glendale, Colorado

Laboratory Services Division
8100 Lowry Blvd.
Denver, Colorado 80230-6928
(303) 692-3090

http://www.cdphe.state.co.us

Colorado Department
of Public Health
and Environment

March 19, 2013

RE: Section 9 Waste Impoundment Regulations
Extension for Submittal of 2012 Annual Report

Dear Waste Impoundment Facility Owners and Operators:

This letter provides an extension for submittal of the 2012 Annual Report as required by Sections 9.2.4 and 9.3.5(D) of the Solid Waste Regulations 6 CCR 1007-2 (the Regulations). Feedback from stakeholders indicate the vast majority of facilities were not able to meet the compliance date of March 1st of the Regulations. The Hazardous Materials and Waste Management Division (Division) is therefore granting an extension of the March 1, 2013 deadline until June 30, 2013. If you would like to submit your annual report prior to June 30, 2013 please do so, and if you have already submitted your annual report, thank you. Please be aware this is a onetime extension for calendar year 2012 data only.

For Type A impoundments the annual report should document those items listed in Section 9.2.4 of the Regulations. For Type B impoundments the annual report should document those items listed in Section 9.3.5(D) of the Regulations. If you don't know which classification of impoundment you have, submit the information in Section 9.2.4 by June 30, 2013. Please keep in mind your facility must still comply with Section 9.1.8 of the Regulations, which requires submittal of an Inventory and Preliminary Classification Report (IPCR) to the Division by March 30, 2013.

The Division webpage where Section 9 can be accessed is: http://www.cdphe.state.co.us/hm/sw/section9/index.htm

If you have any questions regarding this letter, feel free to call me 303.692.3437 or Doug Eagleton of my staff at 303.691.4065.

Sincerely,

Roger Doak
Solid Waste Permitting Unit Leader
Solid Waste and Materials Management Program
Hazardous Materials and Waste Management Division

9.3.5 RECORDKEEPING AND REPORTING REQUIREMENTS

Not all of the requirements below will apply to facilities disposing of or managing their own waste on their own property. Such facilities may note in their EDOP any of the requirements below that are not applicable.

(A) **Record Availability**: For facilities with waste impoundments, all records required by Section 9.3.5, shall be maintained on-site for a minimum of three (3) years unless otherwise approved by the Department and shall be available for inspection by representatives of the Department during regular business hours.

(B) **Incoming Shipments**: For facilities receiving third party wastes, each shipment of solid waste being disposed of in a waste impoundment shall be registered, with the following information entered on a single receipt or manifest:

(1) Date and time;

(2) Receiving impoundment identification;

(3) Quantity;

(4) Type of waste;

(5) Location produced;

(6) Waste generator;

(7) Hauler and truck number; and

(8) Driver's name and signature.

(C) **Monthly Summaries**: All facilities shall maintain monthly summaries, including the total volume of each waste stream managed or disposed in each waste impoundment.

(D) **Annual Report**: All facilities shall submit an annual report by March 1st of each year to the Department. The annual report shall include:

(1) the total volume received of each waste type during the previous calendar year;

(2) the waste removed from each impoundment during the previous calendar year, not including interbasin transfers, with location details provided for final disposition of the waste;

(3) any unplanned releases from an impoundment unit at the facility during the previous calendar year; and

(4) for waste impoundments receiving third party wastes, documentation proving that no hazardous waste has been received (per Section 2.1.2) and random load screening results.

(5) an annual ground water monitoring report, where one is required in the EDOP.

(E) **Routine Monitoring**: All facilities with Type B waste impoundments shall maintain records of monitoring data including ground water monitoring data, fluid level monitoring data, equipment and impoundment inspection logsheets, and precipitation data.

(H) **Inspections**: Records shall be maintained by all facilities with Type B waste impoundments that fully document all inspections, fluid level measurements, damage, repairs and repair verifications to impoundments, the liner systems or ancillary equipment.

(I) **Reporting Requirements**:
For facilities receiving third party wastes, waste characterization results indicating excursions from the facility's approved plans, such as inadvertent receipt of unapproved wastes, shall trigger notification in writing to the Department within seven (7) calendar days after receipt of such results by the owner or operator.

The owner or operator of the facility shall notify the Department within 24 hours of conditions not in substantive compliance with the approved design and operations plan and/or any situation that could cause a violation of the approved operations plan (e.g. major precipitation events, fire, other examples of force majeure). The facility shall remedy the situation as soon as possible, implement contingency plans as appropriate, and notify the Department again following any corrective actions.

Andrea Bollinger

From: Andrea Bollinger
Sent: Thursday, March 07, 2013 7:56 AM
To: Lisa A. Johnson (ljohnson@sdmsi.com)
Cc: Brad Simons
Subject: GNWSD- Crystalluria research

Lisa,

I talked with my vet regarding crystals in dogs urine and below is what was explained to me.

- There are two types of crystals that form.
  - Calcium Oxalate, or
  - Triple phosphate
- The type of crystal that form depends on the pH of the urine.
- Diet plats a role. They said if a dog is diagnosed with crystals that they would restrict the dog's diet until the issue has resolved.
- They hadn't heard of water being the direct reason for crystals forming, but again in came back to diet and the pH of the urine changing.
- The vet said some breeds of dogs are predisposed to getting crystals, but didn't mention Jack Russell Terrier as one of those breeds.
- Bladder infections (Brain said the neighbor's dog had) are caused by bacteria and not crystals. Crystals can aggravate the bladder and bacteria may like to latch onto the crystals, but the crystals won't cause the bladder infection.

The District water has a pH around 7.5 which is normal and I don't think that this water would be the direct cause of the crystals. Please let me know if this is enough information for you.

Thanks,

Andrea Bollinger, EI | Water/Wastewater | Olsson Associates
4690 Table Mountain Drive, Suite 200 | Golden, CO 80403
abollinger@olssonassociates.com | TEL 303.237.2072 | FAX 303.237.2659

Please consider the environment before printing this e-mail.

Ramey Environmental Compliance, Inc.
Management and Operation Solutions for
Water and Wastewater Treatment
303-833-5505

PO Box 99, Firestone, Colorado 80520
email: contact.us@RECinc.net
www.RECinc.net

Greatrock North W & S District
Monthly Activities
February 27th - March 25th

2/27/13: Regular checks and readings.

3/1/13: Regular checks and readings. Pond levels: North Pond = 9.5"; South Pond = 1.5".

3/4/13: Regular checks and readings. Removed dirt from the drain and overflow lines at Boxelder.

3/6/13: Regular checks and readings. Collected and delivered monthly samples.

3/8/13: Regular checks and readings. Added chlorine to the day tank. Pond levels: North Pond = 11"; South Pond = 1".

3/11/13: Regular checks and readings. Filled the chlorine day tank. Helped Timberline Electric troubleshoot the pond level sensor. Reset the flow meters at Boxelder.

3/13/13: Regular checks and readings. Opened all the valves at the ponds.

3/15/13: Regular checks and readings. Boxelder Pump#2 replaced pump shaft seal, volute gasket, retaining ring and shaft sleeve, placed back into service.

3/18/13: Regular checks and readings. Mixed RO anti-scalent.

3/20/13: Regular checks and readings. Pond levels: North Pond = 8"; South Pond = 5".

3/22/13: Regular checks and readings. Changed out the pre-filter cartridges on the RO. Changed oil in the Tonka Flow pump on the RO. Cleaned filters on the VFD's.

3/25/13: Regular checks and readings. Clean in place RO.

February 25 to March 25, 2013

RO Run Time Hrs	130.7 hrs.
RO Concentrate Flow – 2 ponds	258,781 gallons

CONCENTRATE PONDS:

North Pond 3/8/13

South Pond 3/8/13

North Pond 3/11/13

North Pond 3/20/13

South Pond 3/20/13

Resolution Number 2013-04-01

RESOLUTION
OF THE
BOARD OF DIRECTORS
OF THE
GREATROCK NORTH WATER AND SANITATION DISTRICT
AMENDING RULES AND REGULATIONS
(2012 Reissuance)

WHEREAS, the Greatrock North Water and Sanitation District (the "District") was organized in accordance with and pursuant to §§ 32-1-101, *et seq.*, C.R.S. for the purpose of providing water and storm drainage facilities and services to properties within and without its boundaries; and

WHEREAS, pursuant to § 32-1-1001(1)(m), C.R.S., the District's Board of Directors (the "Board") is empowered to adopt, amend and enforce rules and regulations of the District; and

WHEREAS, on June 5, 2012, the Board adopted Rules and Regulations, which Rules and Regulations incorporated all prior revisions adopted by the Board and were reissued as of this date (collectively, "Rules and Regulations"); and

WHEREAS, the Board has determined that the requirements for meter setters needs to be clarified and updated; and

WHEREAS, the Board has developed the specifications and drawings for Appendix B; and

WHEREAS, the Board desires to amend the Rules and Regulations in this Resolution.

NOW, THEREFORE, be it resolved by the Board as follows:

Section 1. REPLACEMENT OF SECTION 12.7 "METER SETTERS ". Section 12.7 of the Rules and Regulations shall be replaced it its entirety with the language set forth in **Exhibit A**, attached hereto.

Section 2. ADDITION SPECIFICATIONS AND DRAWINGS FOR APPENDIX B. Appendix B of the Rules and Regulations shall be amended to add the specifications and drawings set forth in **Exhibit B**, attached hereto.

Section 3. PRIOR PROVISIONS EFFECTIVE. Except as specifically amended hereby, all the terms and provisions of the Rules and Regulations, as amended, shall remain in full force and effect.

RESOLVED this 2nd day of April 2013.

GREATROCK NORTH WATER AND SANITATION DISTRICT

Terry Krayenhagen, President

ATTEST:

Brian K. Rogers, Secretary

Greatrock/Rules and Regulations
0495.0005
Doc. # 498660-1

EXHIBIT A
Section 12.7

12.7 METER SETTERS. Meter setters shall be of an all copper and brass construction and shall have a positive ¼ turn shut-off valve on the inlet side of the setter with padlock wings. Vertical meter settings for inside-house installation shall be Ford Copperhorn or approved equal. Horizontal meter settings for outside-house (meter pit) installation shall be Ford Series 70 Coppersetter or approved equal. Meter yoke shall contain a single check valve (or other backflow prevention device as determined by the District) on the downstream side of the yoke. Provide a seven inch (7") meter yolk for meter installation.

The water meter setting shall provide a continuous, electrically conductive path around the water meter. If a bonding jumper is required, it shall be made of copper with fittings suitable for the bonding jumper and the water pipe material. The meter setting installation shall be in compliance with the NEC, Articles 100, 250-81, 250-94, 250-112 and 250-115(a).

12.7.1 OUTSIDE METER SETTINGS WITH REMOTE READOUTS. Outside meters shall be installed in a horizontal position and housed in a concrete manhole or vault. Remote readouts shall be located in an approved location

Meter settings for meters larger than one inch (1") shall be installed per Denver Water standard details.

EXHIBIT B
Appendix B

DETAIL TABLE OF CONTENTS

SHEET NUMBER	SHEET TITLE	REVISION NUMBER
GRN-1W	TYPICAL FIRE HYDRANT AND ASSEMBLY	1
GRN-2W	BLOWOFF DETAIL	1
GRN-3W	COMBINATION AIR VALVE AND MANHOLE	1
GRN-4W	COMBINATION AIR VALVE AND MANHOLE SECTION A-A	1
GRN-5W	COMBINATION AIR VALVE AND MANHOLE SECTION B-B	1
GRN-6W	PRESSURE REDUCING VAULT-PLAN VIEW	1
GRN-7W	PRESSURE REDUCING VAULT-PROFILE VIEW	1
GRN-8W	PRV VAULT SCHEDULE	1
GRN-9W	AIR VENT PIPE INSTALLATION AND DETAIL-OPEN FIELD	1
GRN-10W	AIR VENT DETAIL-RESIDENTIAL	1
GRN-11W	6 INCH DIAMETER AIR VENT PIPE SCREEN	1
GRN-12W	THRUST BLOCKS-HORIZONTAL BENDS DETAIL	1
GRN-13W	RESTRAINED JOINTS AT VERTICAL BENDS	1
GRN-14W	GATE VALVE DETAIL	1
GRN-15W	POLYETHYLENE WRAP	1
GRN-16W	CARSONITE MARKER POST	1
GRN-17W	METER PIT DETAIL	1
GRN-18W	DIRECT BURY BUTTERFLY VALVE INSTALLATION	1
GRN-19W	BUTTERFLY VALVE INSTALLATION-ELEVATION VIEW	1
GRN-20W	BUTTERFLY VALVE INSTALLATION-PLAN VIEW	1
GRN-21W	LENGTH OF RESTRAINED PIPE	1
GRN-22W	PIPE BEDDING DETAILS	1
GRN-23W	FLANGE LUG DETAIL	1
GRN-24W	TRACER WIRE DETAIL	1

DATE 03/13	GREATROCK NORTH WATER AND SANITATION DISTRICT TABLE OF CONTENTS	TOC

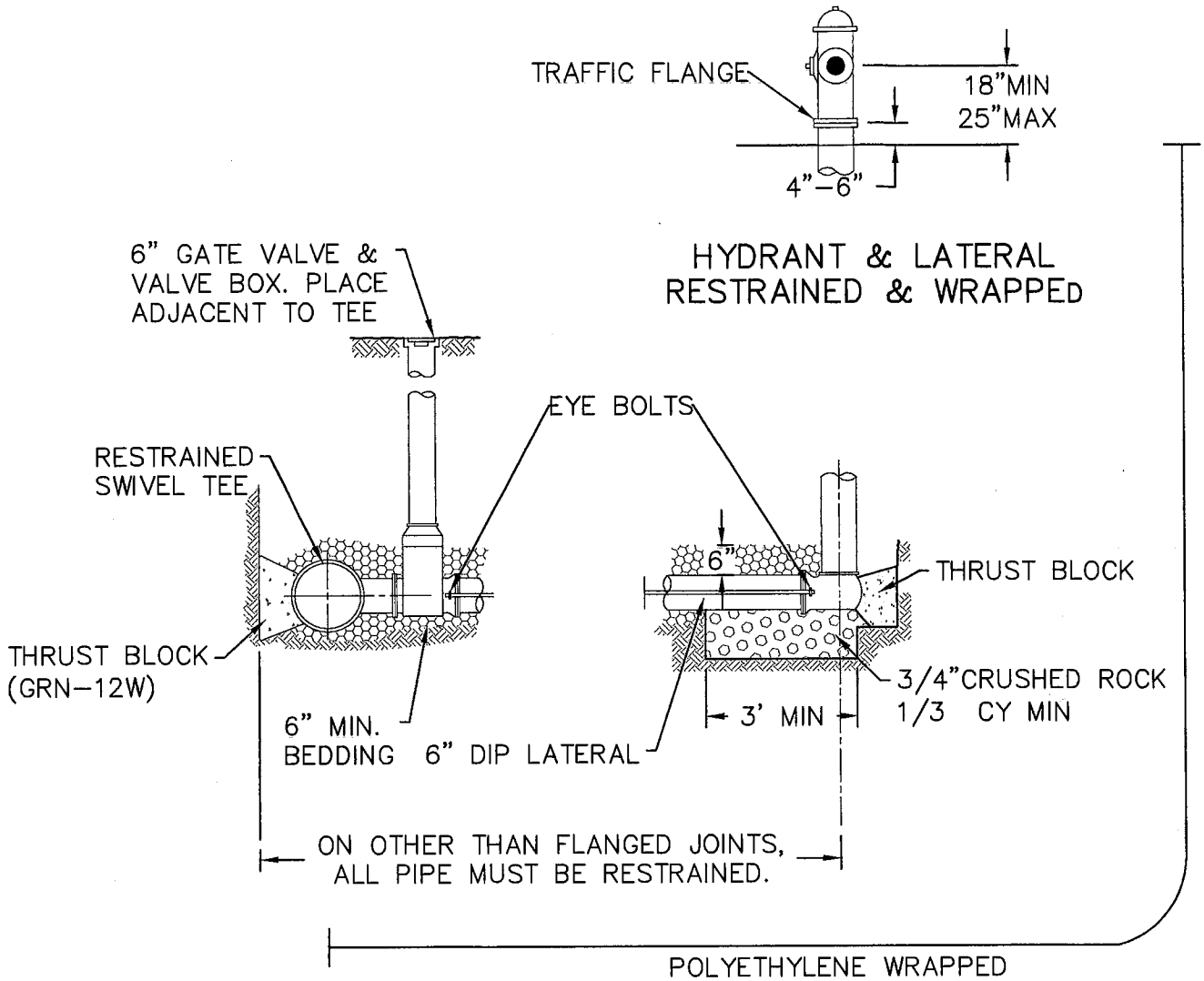

NOTES:

1. TOTAL VOLUME OF HYDRANT PIT SHALL BE A MINIMUM OF 1 C.Y. OF 3/4" CRUSHED ROCK.

2. HYDRANT SHALL BE SET 7'–0" FROM EDGE OF PAVEMENT WHERE NO CURB EXISTS OR 4'–0" FROM BACK OF CURB, WITH A MINIMUM OF 2' SEPARATION FROM PROPERTY LINE

3. WEEP HOLES ON HYDRANT BARREL SHALL NOT BE BLOCKED.

NOT TO SCALE

DATE 03/13	GREATROCK NORTH WATER AND SANITATION DISTRICT	GRN–1W
	TYPICAL FIRE HYDRANT AND ASSEMBLY	

NOTE:
PLUG SHALL BE MECHANICALLY RESTRAINED:
A–SEE GRN–23W FOR REQ'D LENGTH TO BE RESTRAINED
B–FOR SLEEVE TYPE MACHINED COUPLING PIPE TIE BACK TO NEXT COUPLING
C–FOR BELL AND SPIGOT PIPE TIE TO BELL

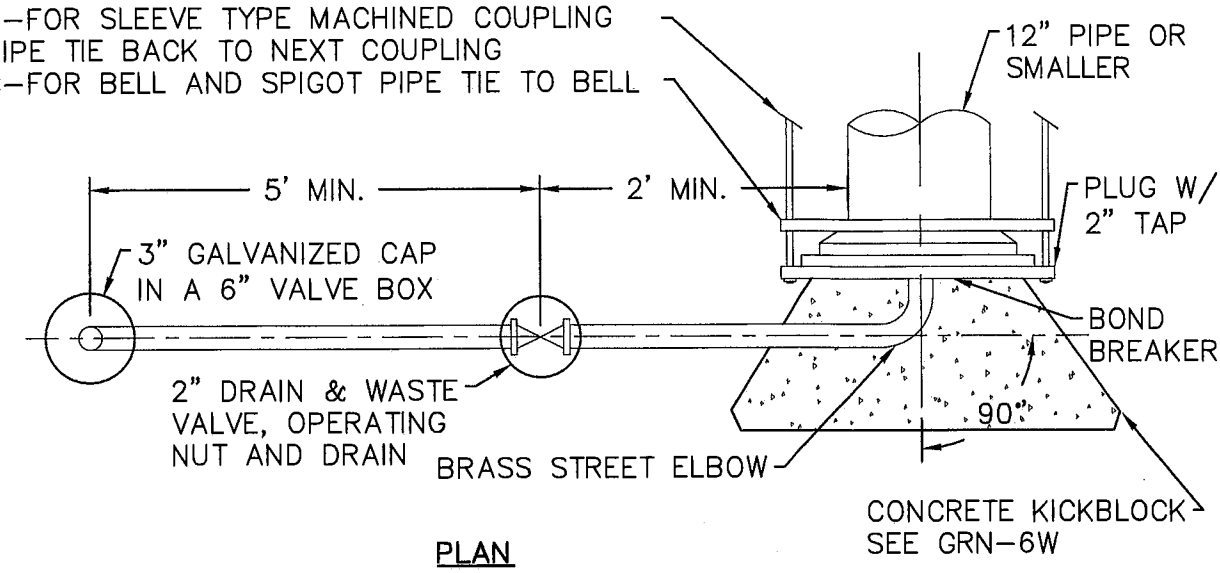

PLAN

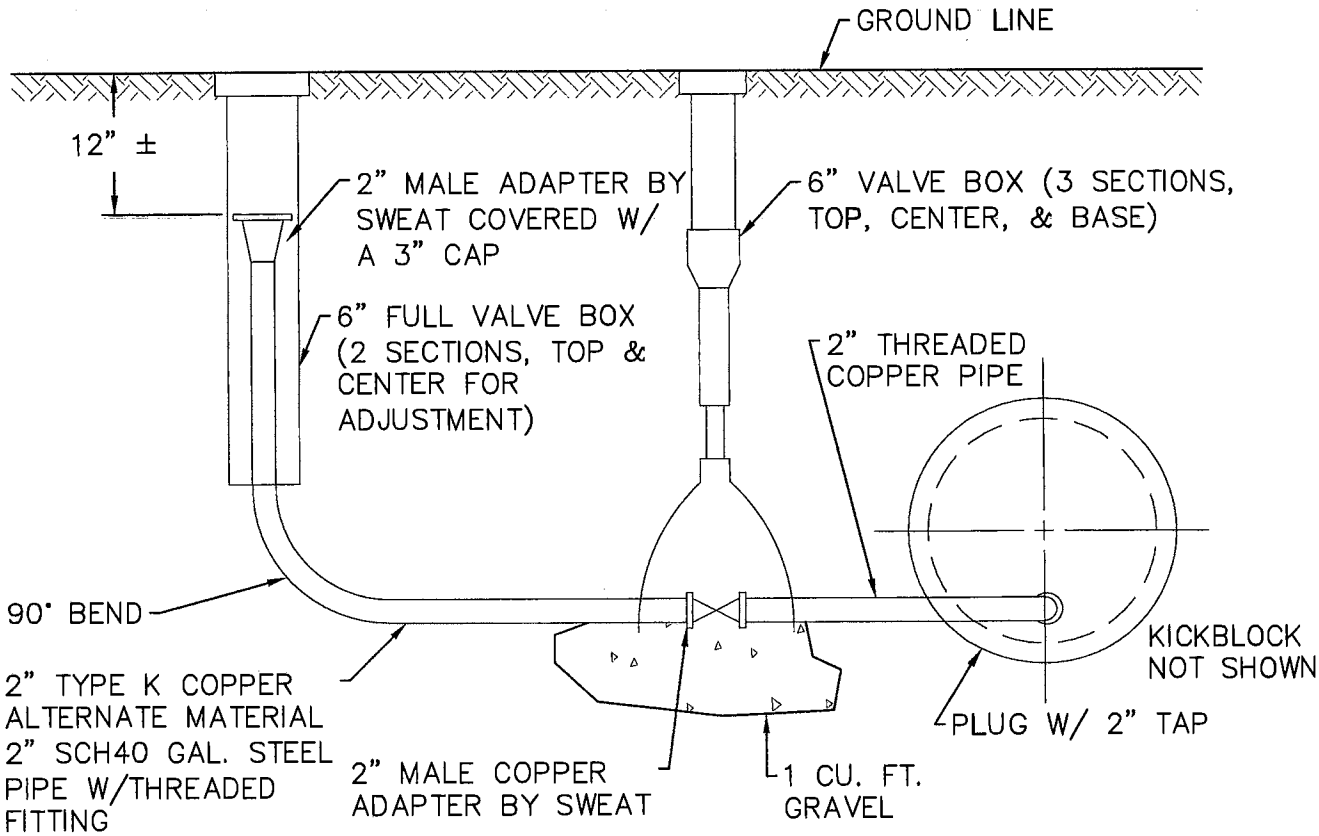

ELEVATION

DATE 03/13	GREATROCK NORTH WATER AND SANITATION DISTRICT BLOWOFF DETAIL	GRN–2W

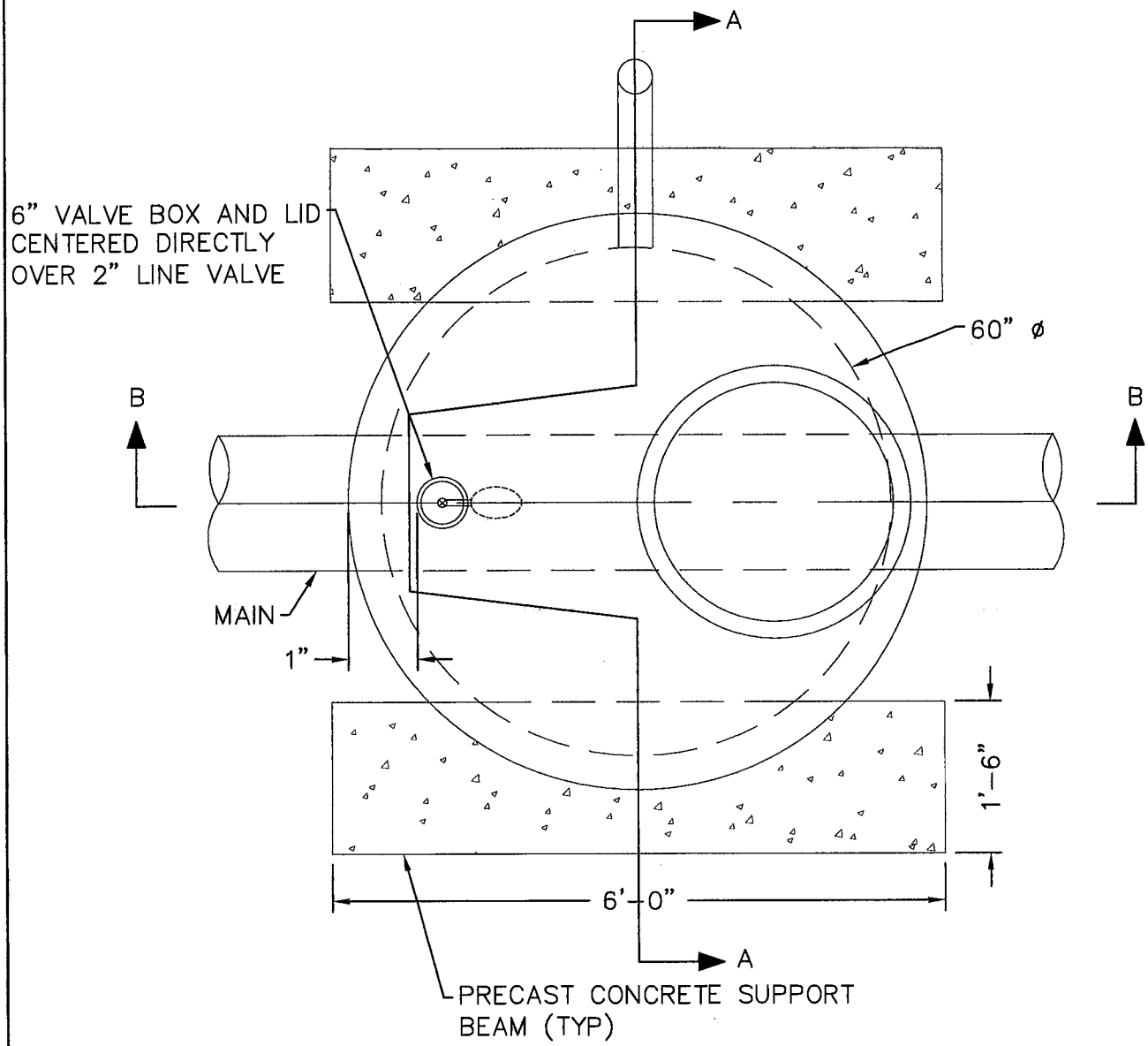

PLAN

NOTE:
FOR SECTION A-A, SEE GRN-4W
FOR SECTION B-B, SEE GRN-5W

DATE 03/13	GREATROCK NORTH WATER AND SANITATION DISTRICT	GRN-3W
	COMBINATION AIR VALVE AND MANHOLE	

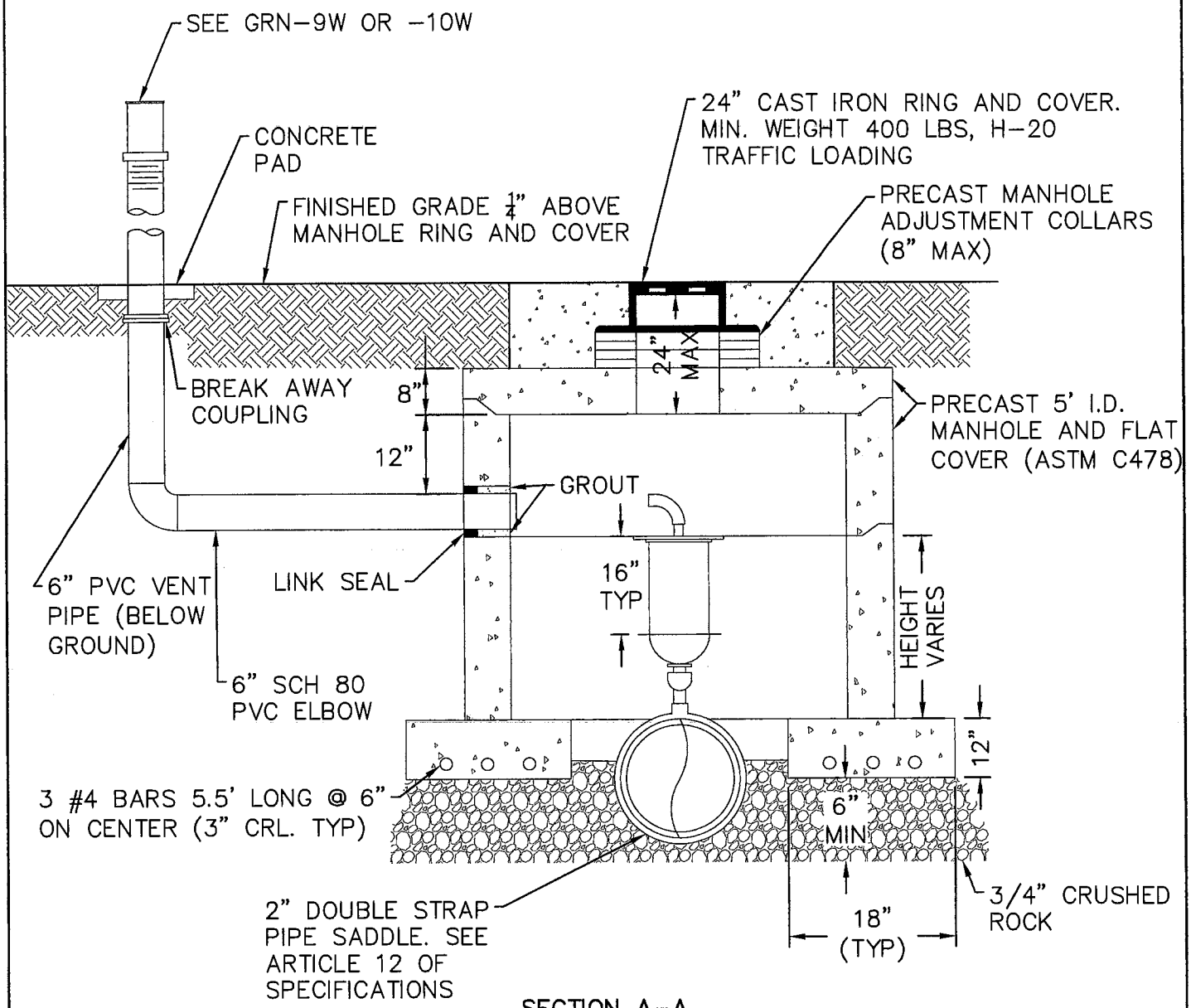

SECTION A-A

(VALVE BOX NOT SHOWN)
NTS

IRRIGATION NOTE:
WHERE AIR VALVE IS INSTALLED ON AN IRRIGATION MAIN, MANHOLE COVER AND VALVE BOX LID SHALL BE IN CONFORMANCE WITH THE REQUIREMENTS OF THE IRRIGATION SYSTEM

DATE 03/13	GREATROCK NORTH WATER AND SANITATION DISTRICT	GRN-4W
	COMBINATION AIR VALVE AND MANHOLE	

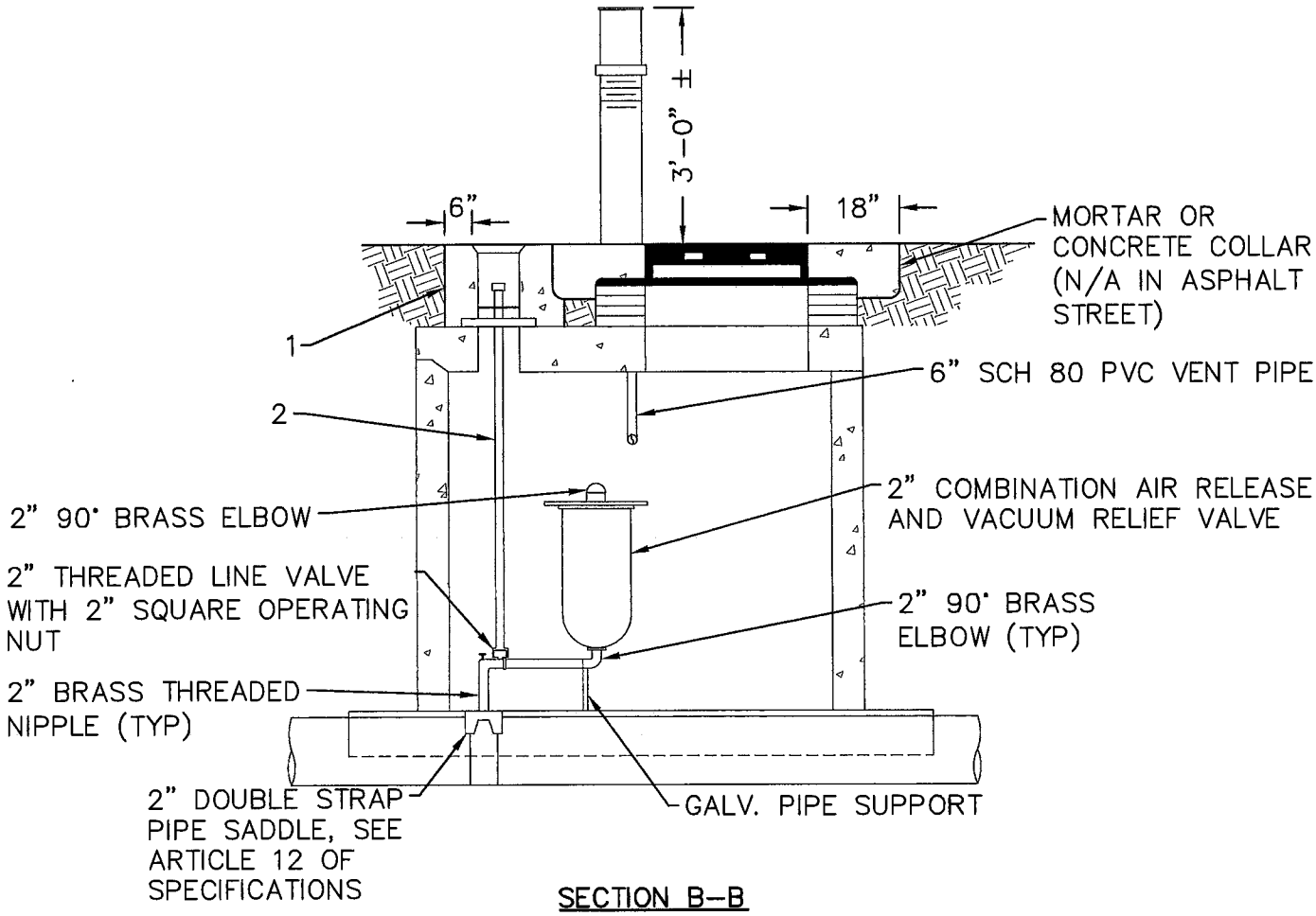

SECTION B–B

SECTION B–B NOTES

1. 6" THICK CONCRETE ENCASEMENT AROUND VALVE BOX. LEAVE 2" BELOW SURFACE WHEN LOCATED IN ASPHALT
2. VALVE NUT EXTENSION WITH CENTERING RING IN VALVE BOX. LEAVE 2" OPERATING NUT 2"–3" BELOW LID

DATE 03/13	GREATROCK NORTH WATER AND SANITATION DISTRICT	GRN–5W
	COMBINATION AIR VALVE AND MANHOLE	

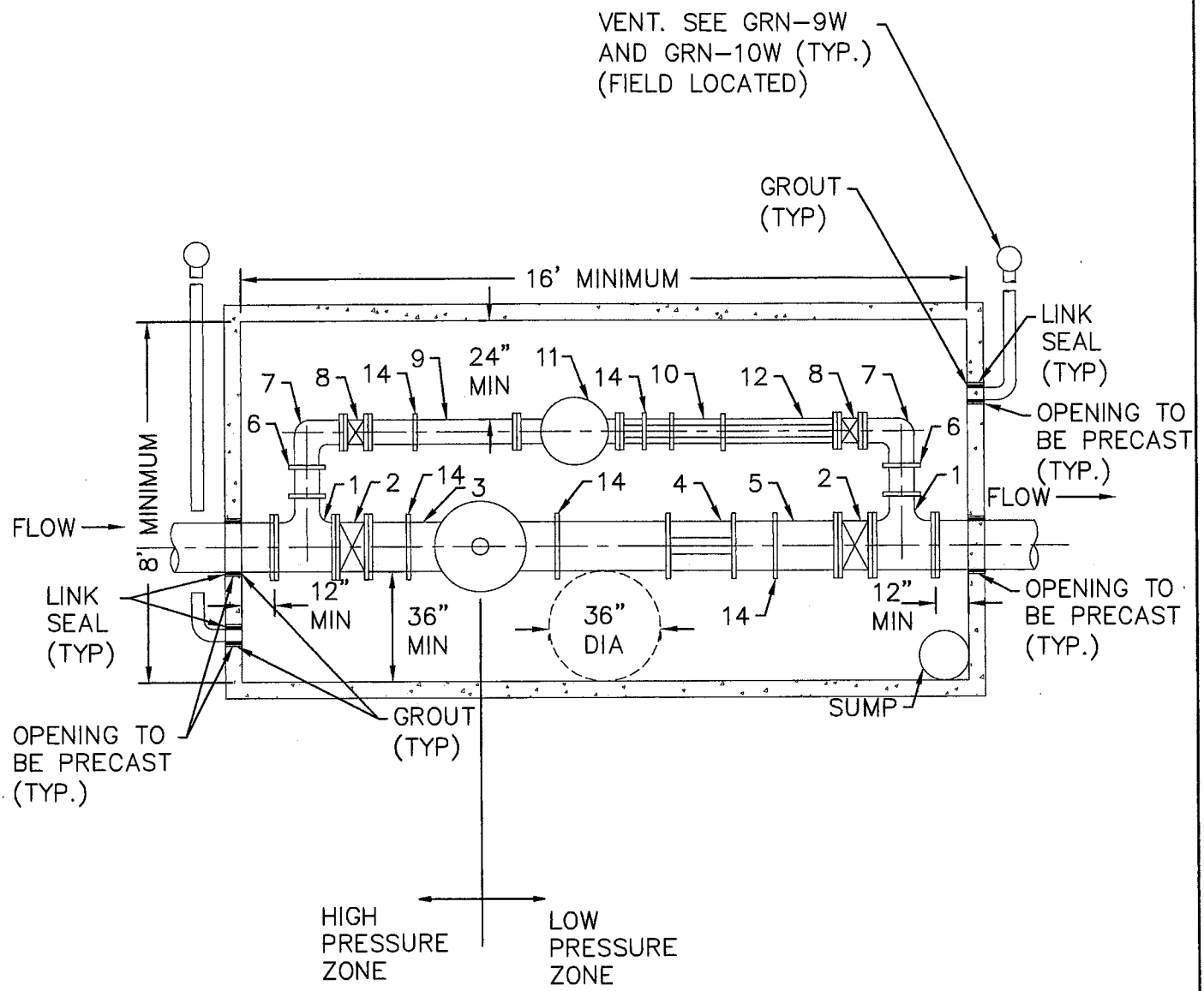

FOR SCHEDULE OF PIPING SEE DETAIL GRN-8W

DATE 03/13	GREATROCK NORTH WATER AND SANITATION DISTRICT	GRN-6W
	PRESSURE-REDUCING VAULT-PLAN VIEW	

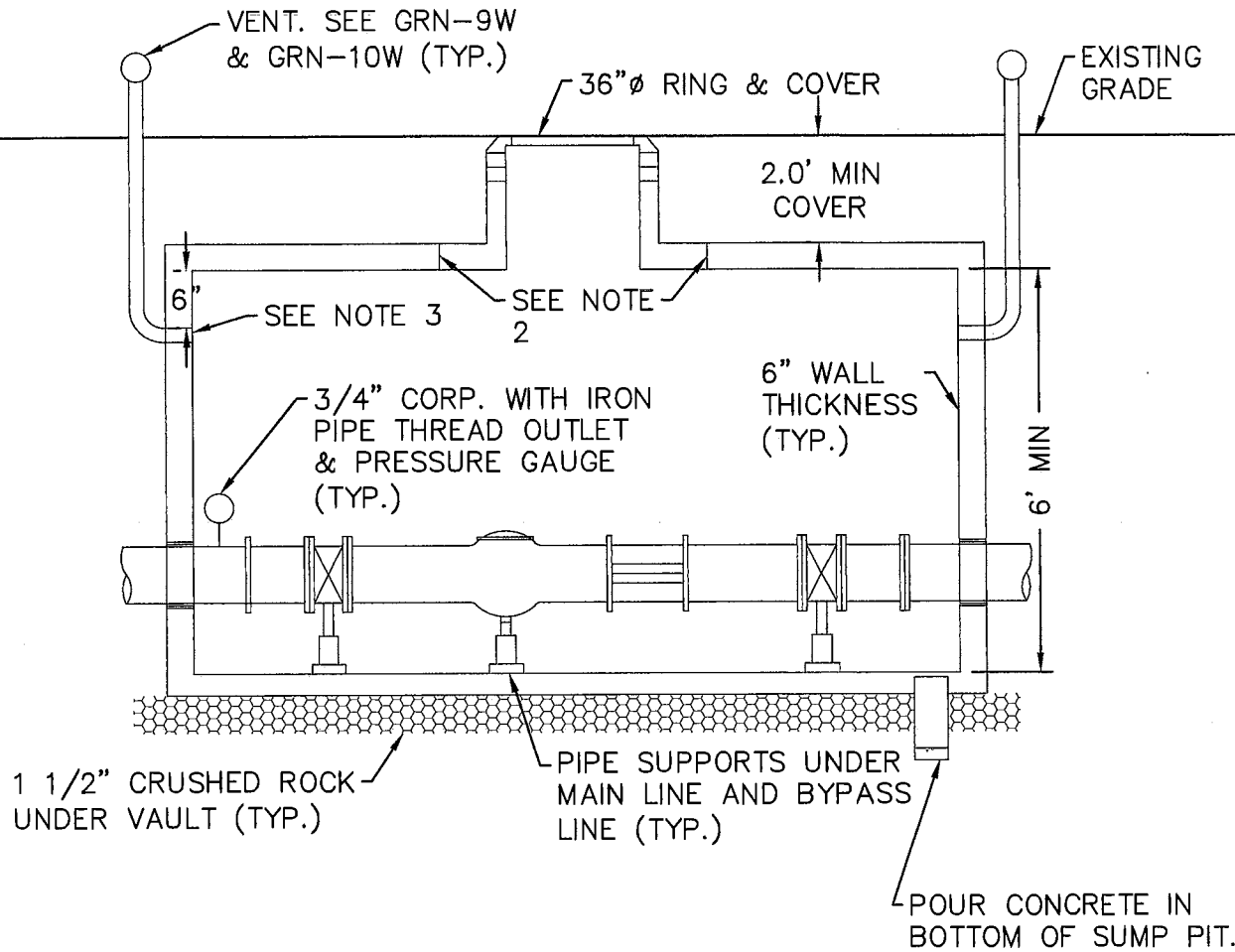

NOTES:
1. EXTERIOR CONCRETE SURFACES SHALL BE DAMP-PROOFED IN ACCORDANCE WITH THE SPECIFICATIONS.
2. VAULT LID SHALL HAVE A REMOVABLE SECTION (MIN. 6' WIDE) WITH LIFTING RING.
3. CONNECT GALVANIZED SCREEN TO VENT PIPE WITH HOSE CLAMP AROUND PIPE. (TYP.)

DATE 03/13	GREATROCK NORTH WATER AND SANITATION DISTRICT	GRN-7W
	PRESSURE REDUCING VAULT-PROFILE VIEW	

PRV VAULT PIPING SCHEDULE

1. 4" X *" TEE (FL X FL X FL)
2. *" GATE VALVE (FL X FL)
3. *" PRESSURE REDUCING / SUSTAINING VALVE SEE 8.6.6 OF SPECIFICATIONS
4. *" DRESSER COUPLING
5. *" SPOOL (FL X PE)
6. 4" SPOOL
7. 4" 90° BEND (FL X FL)
8. 4" GATE VALVE (FL X FL)
9. 4" SPOOL (FL X FL)
10. 4" DRESSER COUPLING
11. 4" PRESSURE REDUCING / SUSTAINING VALVE SEE 8.6.6 OF SPECIFICATIONS
12. 4" SPOOL (FL X PE)
13. ALL FITTINGS AND PIPING WILL BE PAINTED "PRECAUTION BLUE" ENAMEL
14. HDG PIPE SUPPORT

*" = SIZE TO BE DETERMINED BY MAIN PIPELINE

DATE 03/13	GREATROCK NORTH WATER AND SANITATION DISTRICT	GRN-8W
	PRV VAULT SCHEDULE	

NOTE:
VENT PIPES TO BE LOCATED AS DIRECTED BY THE DISTRICT.

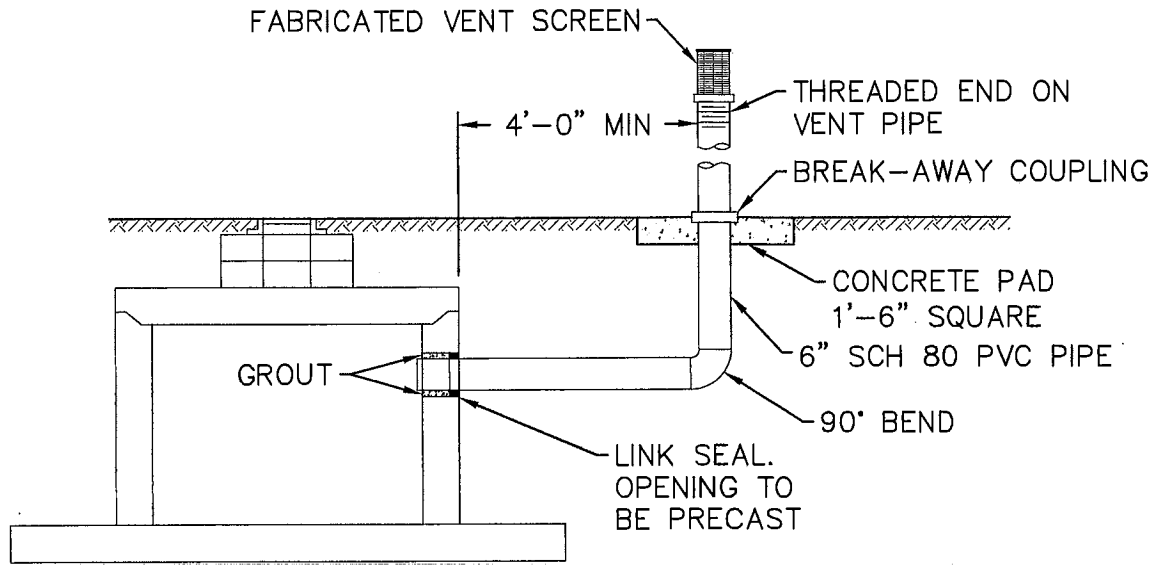

VENT PIPE INSTALLATION

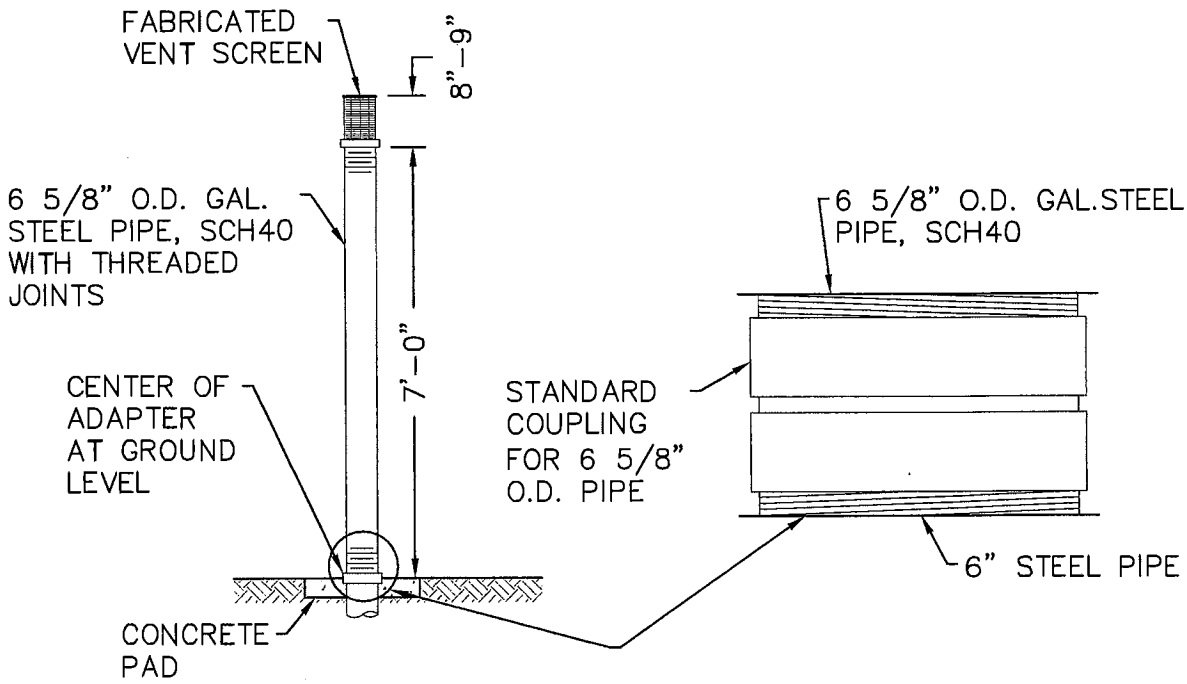

DATE 03/13	GREATROCK NORTH WATER AND SANITATION DISTRICT	GRN-9W
	AIR VENT PIPE INSTALLATION AND DETAIL-OPEN FIELD	

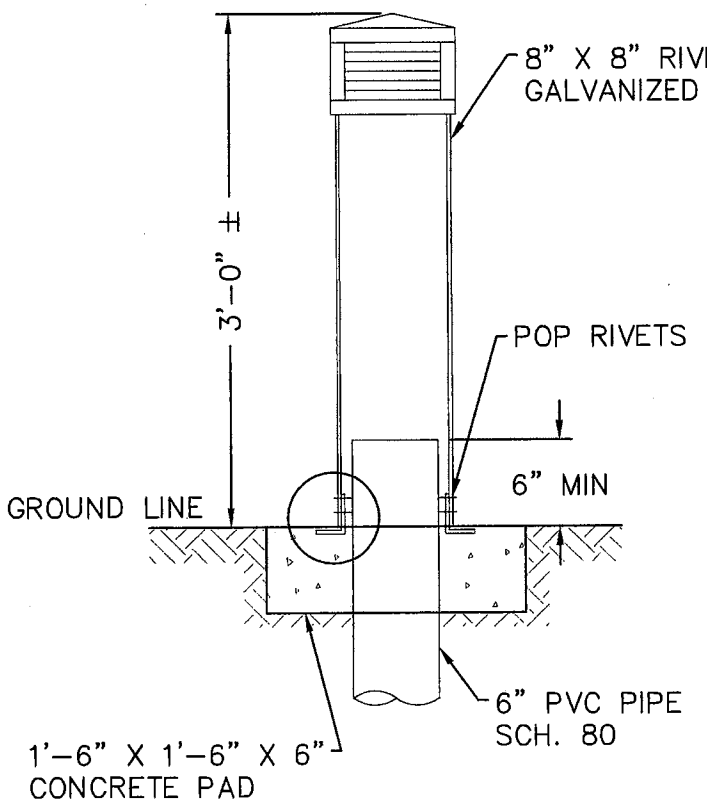

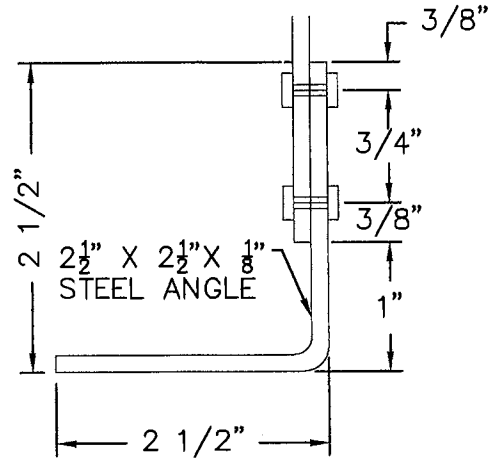

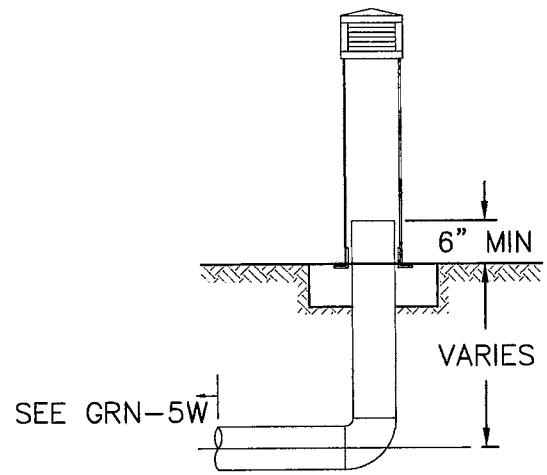

DATE 03/13	GREATROCK NORTH WATER AND SANITATION DISTRICT	GRN-10W
	AIR VENT DETAIL-RESIDENTIAL	

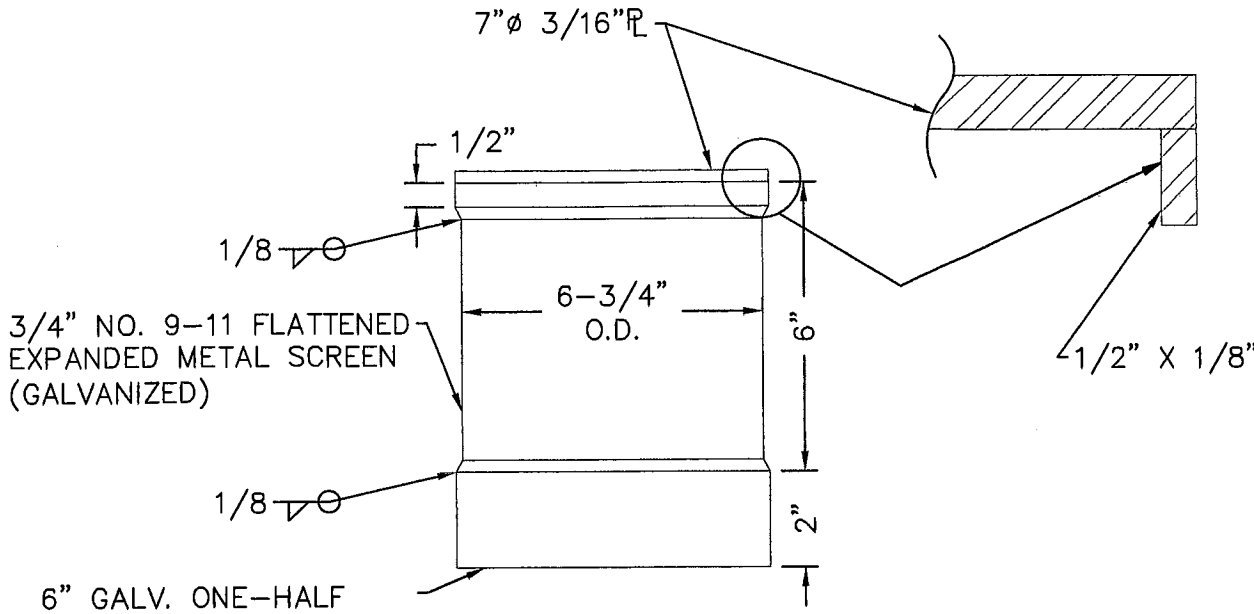

ELEVATION

SCREEN FOR 6" VENT PIPE

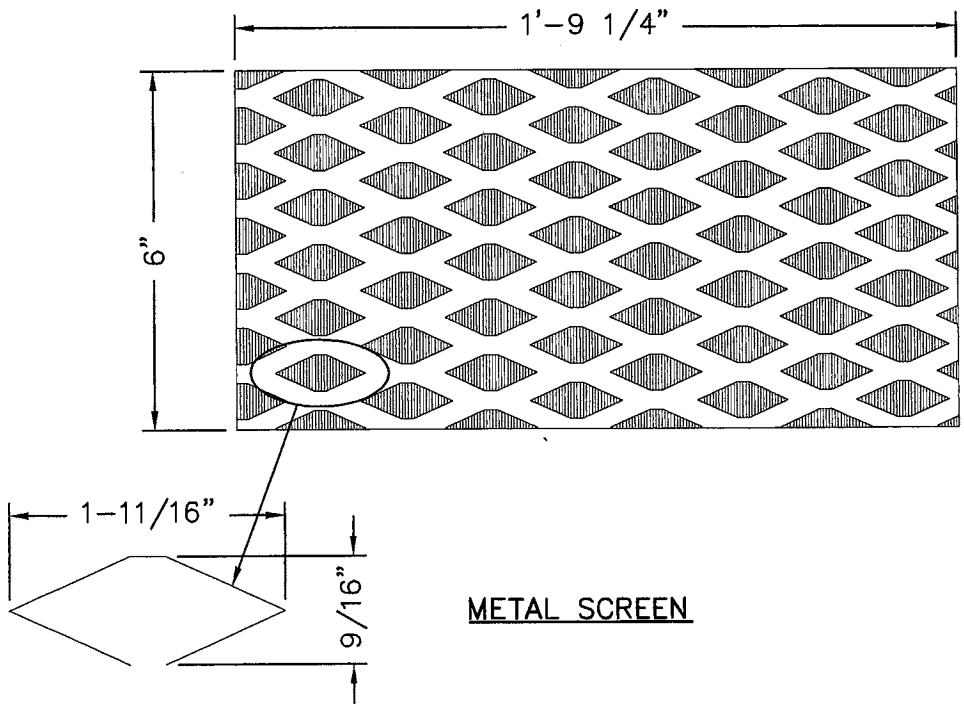

METAL SCREEN

DATE 03/13	GREATROCK NORTH WATER AND SANITATION DISTRICT	GRN-11W
	6" DIAMETER VENT PIPE SCREEN	

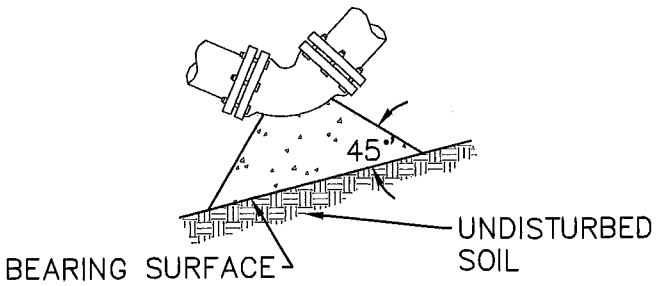

11 1/4, 22 1/2, & 45 BENDS

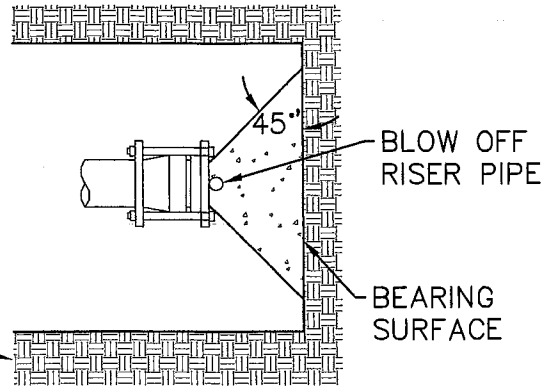

DEAD END

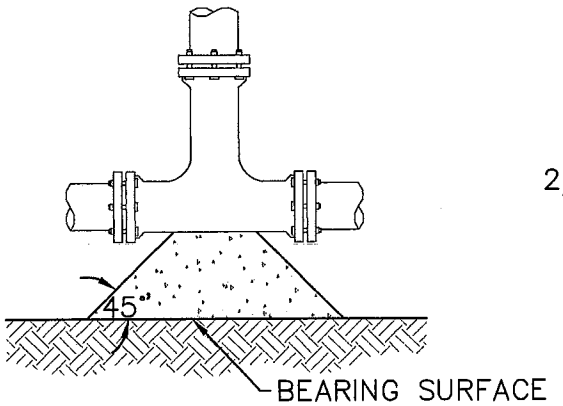

TEE

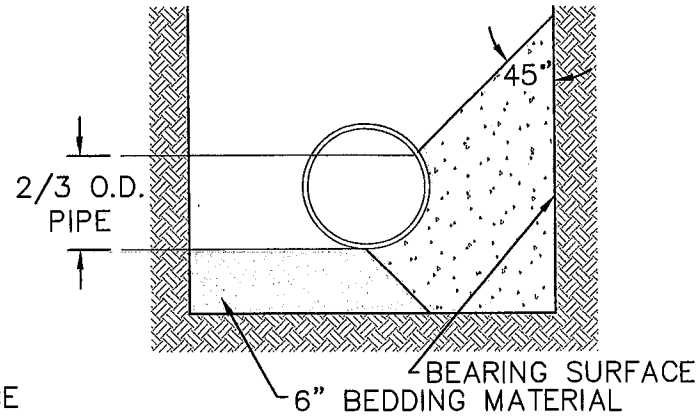

TYPICAL CROSS SECTION

MINIMUM BEARING SURFACE AREA
(IN SQUARE FEET)

SIZE OF PIPE	BENDS				TEE OR DEAD END
	11 1/4°	22 1/2°	45°	90°	
4"	2.00	2.00	2.00	2.00	2.00
6"	2.00	2.00	2.25	4.25	3.00
8"	2.00	2.00	4.00	8.00	5.25
12"	2.00	4.25	8.25	12.00	11.00
16"	3.50	6.50	12.50	23.00	16.50
20"	.5.00	10.00	19.50	35.50	25.00

NOTES:

1. PLACE 4 MIL. POLYETHYLENE BETWEEN CONCRETE AND FITTING (CONCRETE SHALL NOT INTERFERE WITH JOINT.).
2. MININUM CONCRETE THICKNESS SHALL BE 12 INCHES.
3. THE HORIZONTAL DIMENSION OF THE BEARING AREA SHALL BE BETWEEN 0.8 AND 1.25 TIMES THE VERTICAL DIMENSION.
4. THRUST BLOCK ORIENTATION SHALL BE SUCH THAT THE CENTER OF THE FITTING CORRESPONDS WITH THE CENTER OF THE THRUST BLOCK.
5. THE MINIMUM ALLOWABLE ANGLE (EITHER VERTICAL OR HORIZONTAL) SHALL BE 45 DEGREES.

DATE 03/13	GREATROCK NORTH WATER AND SANITATION DISTRICT	GRN-12W
	THRUST BLOCKS- HORIZONTAL BENDS DETAIL	

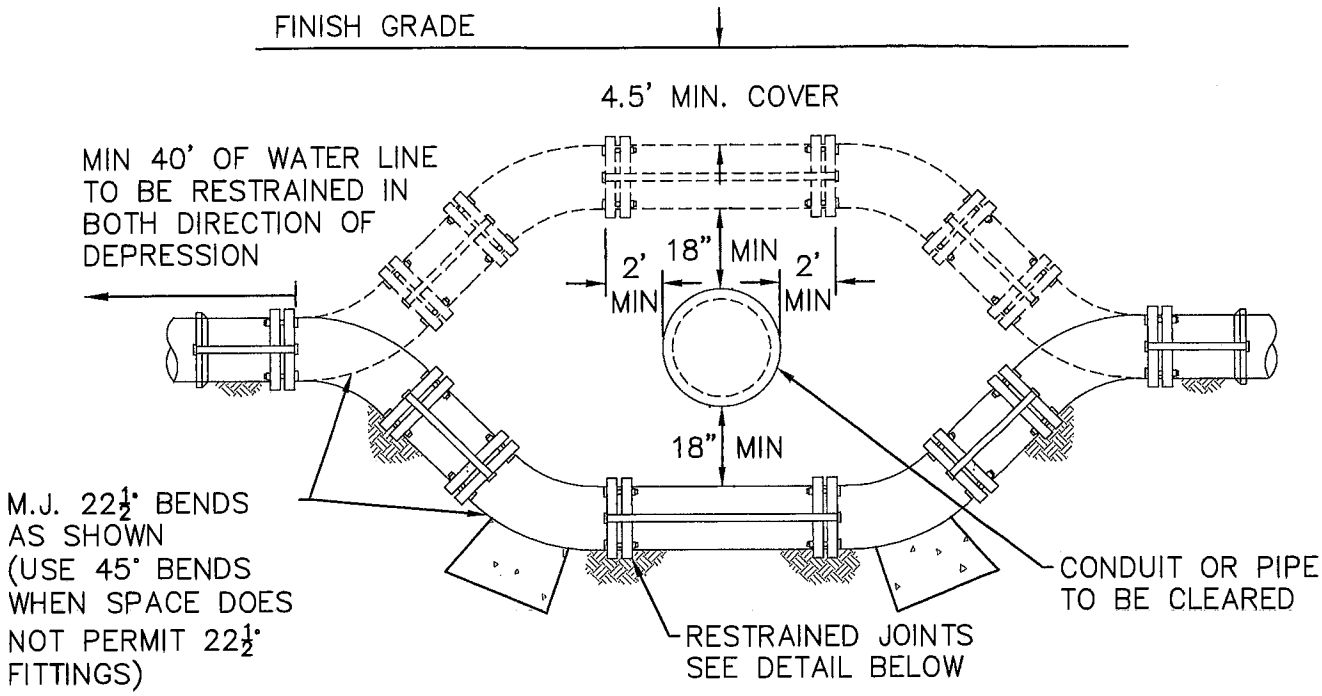

TYPICAL DETAIL FOR WATER LINE DEPRESSION

4", 6", 8", 10", 12" DIAMETERS

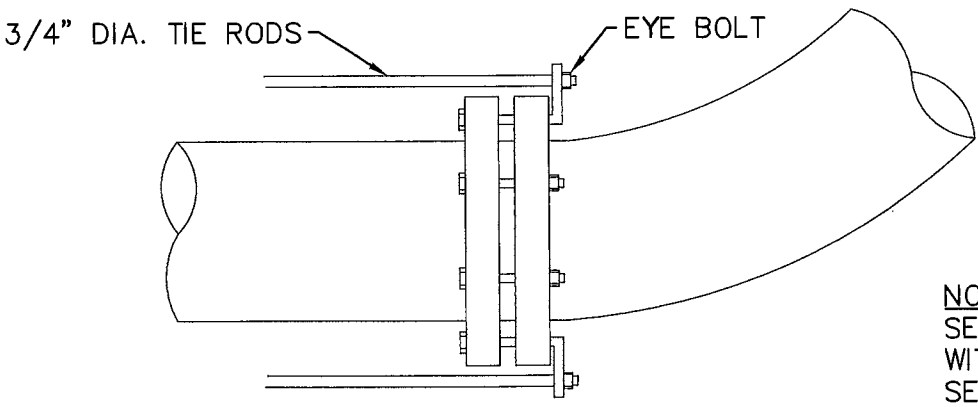

NOTE:
SEE GRN-6SW FOR CROSSING WITH STORM OR SANITARY SEWER

TYPICAL RESTRAINED JOINTS

MAY USE MEG-A-LUGS OR RODDING

DATE 03/13	GREATROCK NORTH WATER AND SANITATION DISTRICT	GRN-13W
	RESTRAINED JOINTS AT VERTICAL BENDS	

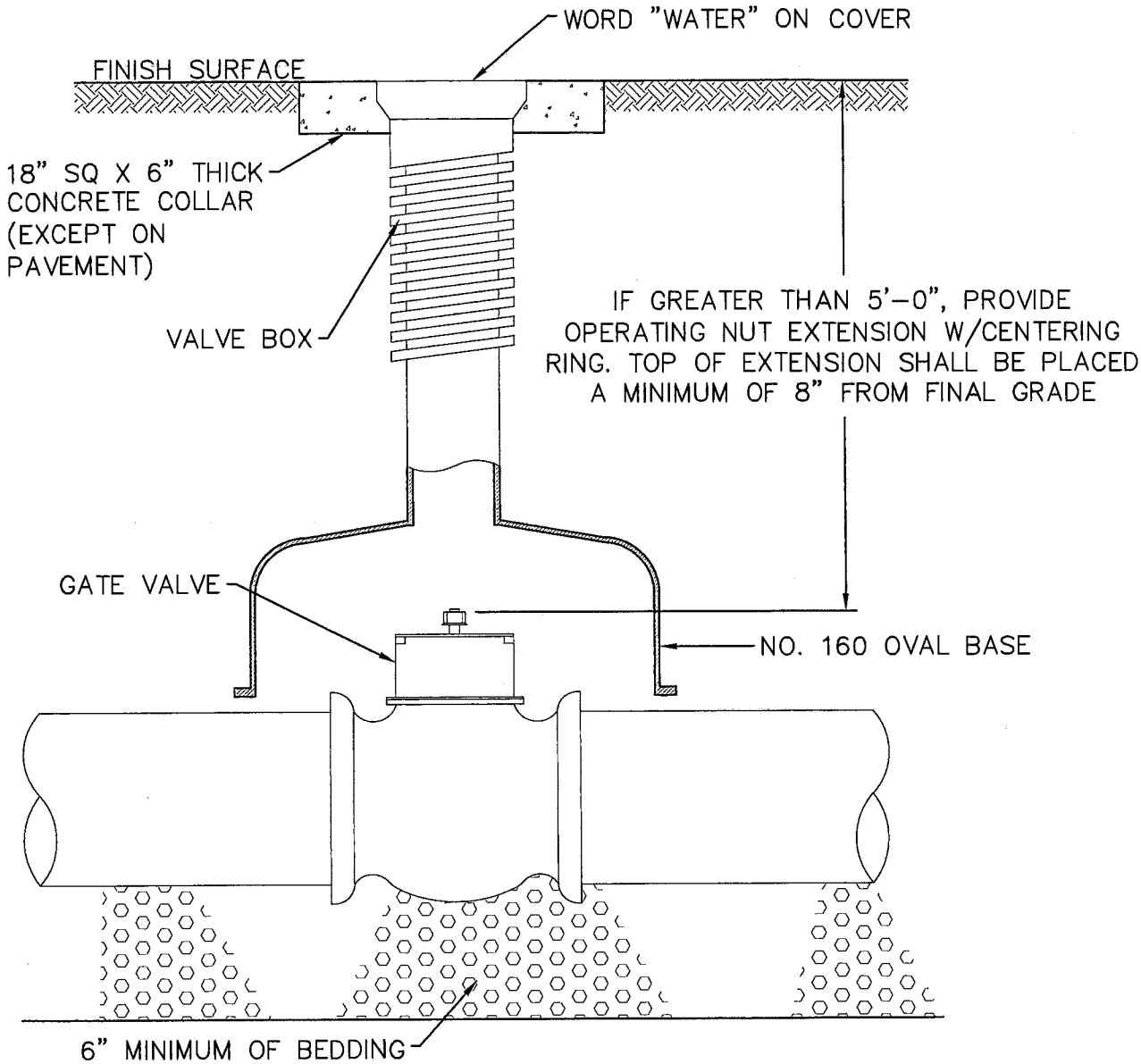

NOTES:
1. FITTINGS SHALL BE WRAPPED WITH 8 MIL MINIMUM THICKNESS POLYETHYLENE
2. GATE VALVES SHALL BE PER 8.6.4 OF THE SPECIFICATIONS
3. VALVE BOX SHALL BE PER 8.6.8 OF THE SPECIFICATIONS

DATE 03/13	GREATROCK NORTH WATER AND SANITATION DISTRICT	GRN-14W
	GATE VALVE DETAIL	

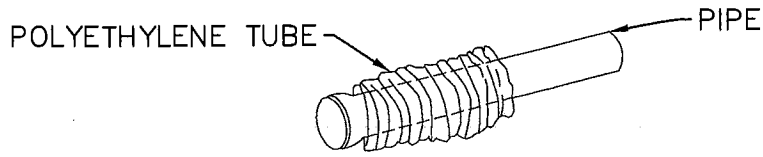

STEP 1

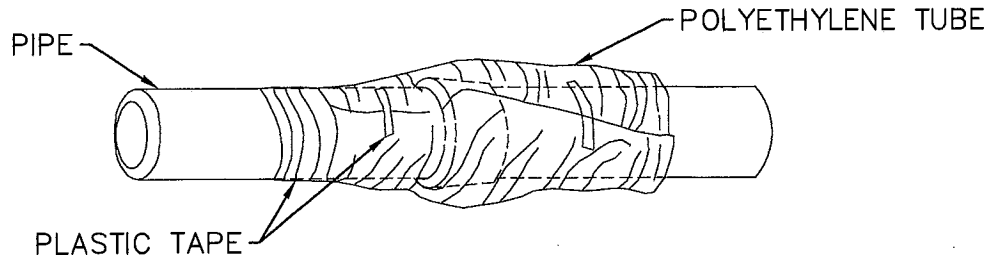

STEP 2

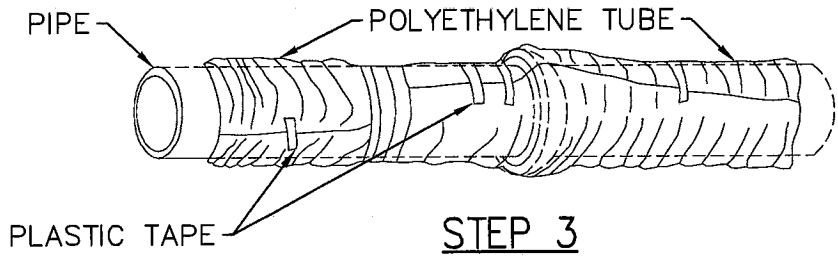

STEP 3

FIELD INSTALLATION–POLYETHYLENE WRAP

STEP–1 PLACE TUBE OF POLYETHYLENE MATERIAL AROUND PIPE PRIOR TO LOWERING PIPE INTO TRENCH

STEP–2 PULL THE TUBE OVER THE LENGTH OF THE PIPE. TAPE TUBE TO PIPE AT JOINT. FOLD MATERIAL AROUND THE ADJACENT SPIGOT END AND WRAP WITH THREE CIRCUMFERENTIAL TURNS OF TWO–INCH WIDE PLASTIC TAPE TO HOLD PLASTIC TUBE AROUND SPIGOT END

STEP–3 ADJACENT TUBE OVERLAPS FIRST TUBE AND IS SECURED WITH PLASTIC ADHESIVE TAPE. THE POLYETHYLENE TUBE MATERIAL COVERING THE PIPE WILL BE LOOSE. EXCESS MATERIAL SHALL BE NEATLY DRAWN UP AROUND THE PIPE BARREL, FOLDED INTO AN OVERLAP ON TOP OF THE PIPE AND HELD IN PLACE BY MEANS OF PIECES OF THE PLASTIC TAPE AT APPROXIMATELY THREE TO FIVE FOOT INTERVALS

DATE 03/13	GREATROCK NORTH WATER AND SANITATION DISTRICT	GRN–15W
	POLYETHYLENE WRAP	

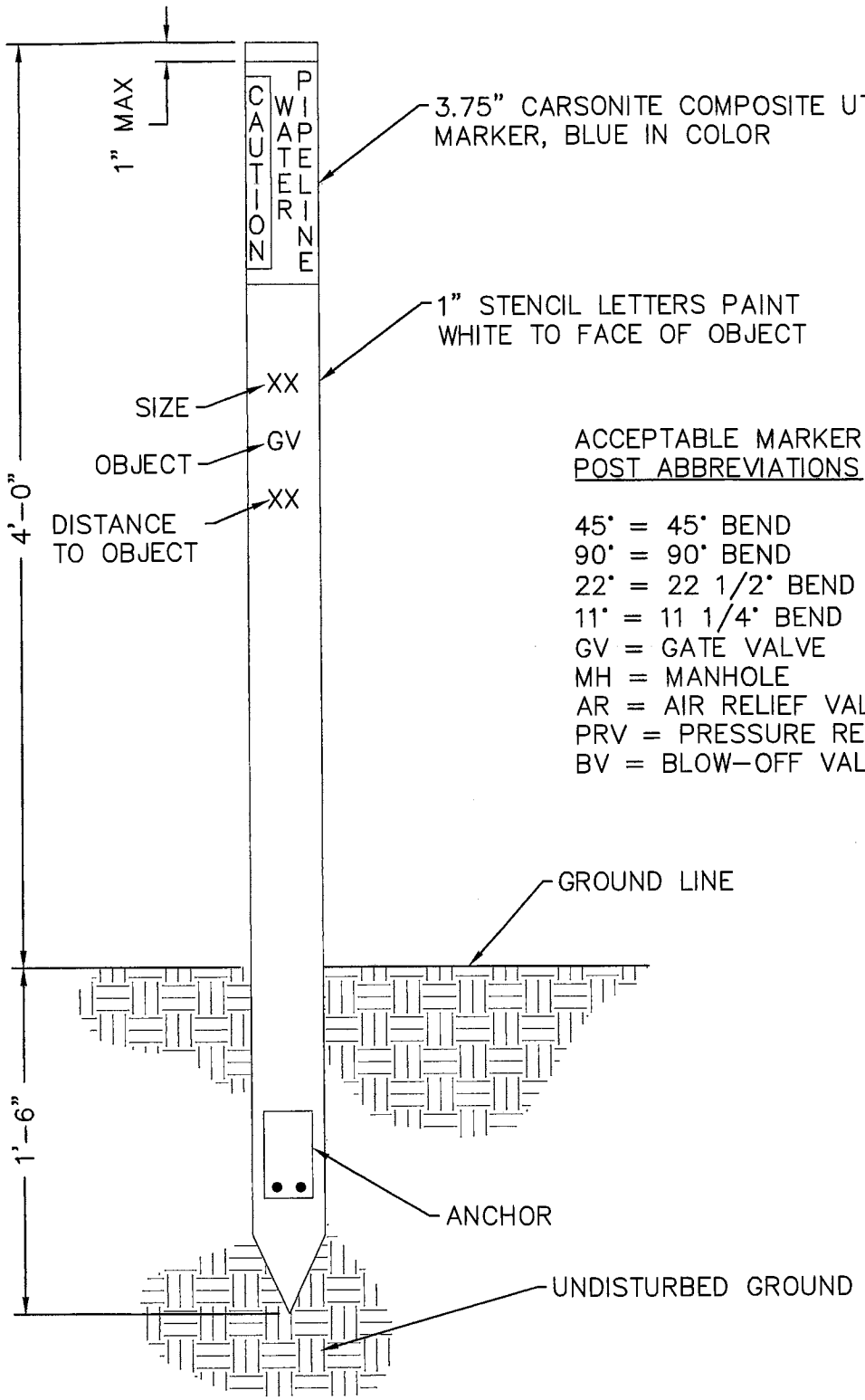

ACCEPTABLE MARKER POST ABBREVIATIONS

45° = 45° BEND
90° = 90° BEND
22° = 22 1/2° BEND
11° = 11 1/4° BEND
GV = GATE VALVE
MH = MANHOLE
AR = AIR RELIEF VALVE
PRV = PRESSURE REDUCING VALVE
BV = BLOW-OFF VALVE

NOTE:
1. MARKER TO BE USED IN LOCATIONS AS DIRECTED BY THE DISTRICT

DATE 03/13	GREATROCK NORTH WATER AND SANITATION DISTRICT	GRN-16W
	CARSONITE MARKER POST	

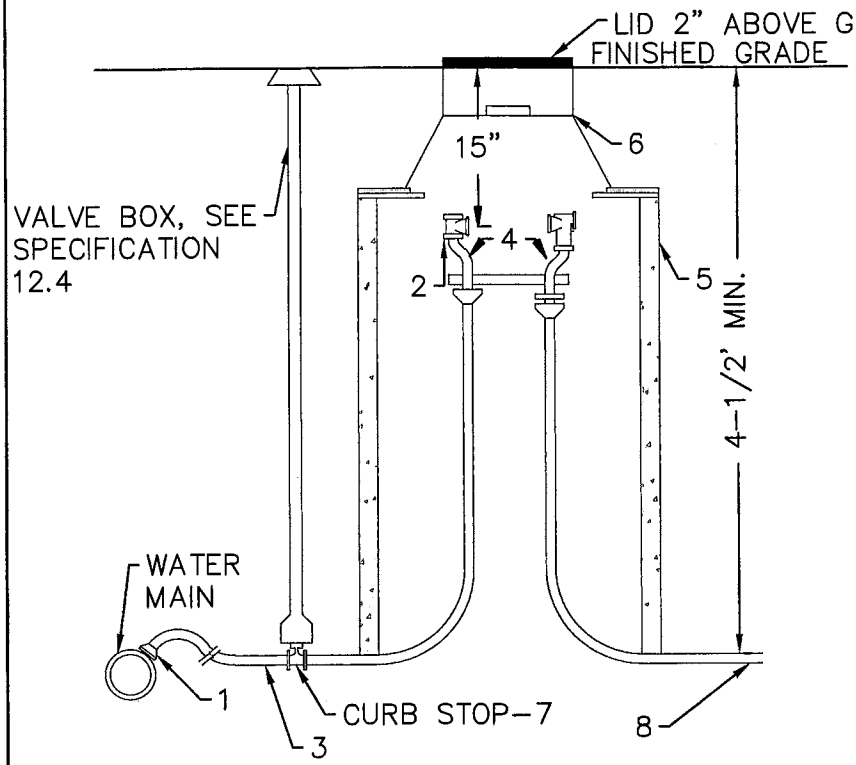

DETAILS (SEE ARTICLE 12 OF SPECIFICATIONS):

1. CORPORATION STOP
2. LOCKING SHUT-OFF VALVE
3. SERVICE LINE
4. METER YOKE W/ CHECK VALVE
5. METER PIT: 24" I.D. X 28" O.D.
6. METER PIT DOME WITH LID
7. CURB STOP
8. SERVICE LINE

NOTES:

1. WATER METER FURNISHED AND INSTALLED BY GREATROCK NORTH WATER & SANITATION DISTRICT.
2. SERVICE LINE MUST HAVE MINIMUM COVER OF 4.5 FEET.
3. WATER DISTRICT PERSONNEL SHALL INSPECT THE SERVICE LINE FROM THE CURB STOP TO THE HOUSE (24 HR. NOTICE REQUIRED FOR INSPECTION).
4. ALL METER PITS SHALL BE STAKED FOR FINISH GRADE IF INSTALLATION PROCEEDS CONSTRUCTION.
5. THE DEPTH OF THE YOKE BELOW THE METER PIT LID IS CRITICAL DIMENSION.
6. NO BENDS PERMITTED IN SERVICE LINE BETWEEN TAP AND 5' BEYOND OUTLET SIDE OF METER. NO CHANGES IN PIPE DIAMETER OR CONNECTIONS OF ANY TYPE ARE PERMITTED IN THE SERVICE LINE UNTIL 5 FEET OR MORE FROM THE OUTLET SIDE OF METER PIT.
7. CHECK VALVE MAY BE INSTALLED INSIDE HOUSE DOWNSTREAM OF SHUTOFF VALVE IN LIEU OF YOKE.

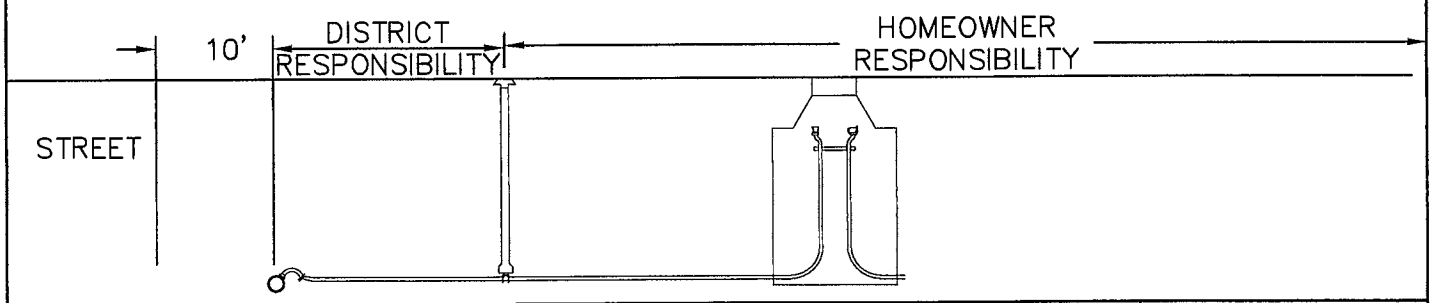

DATE 03/13	GREATROCK NORTH WATER AND SANITATION DISTRICT	GRN-17W
	METER PIT DETAIL	

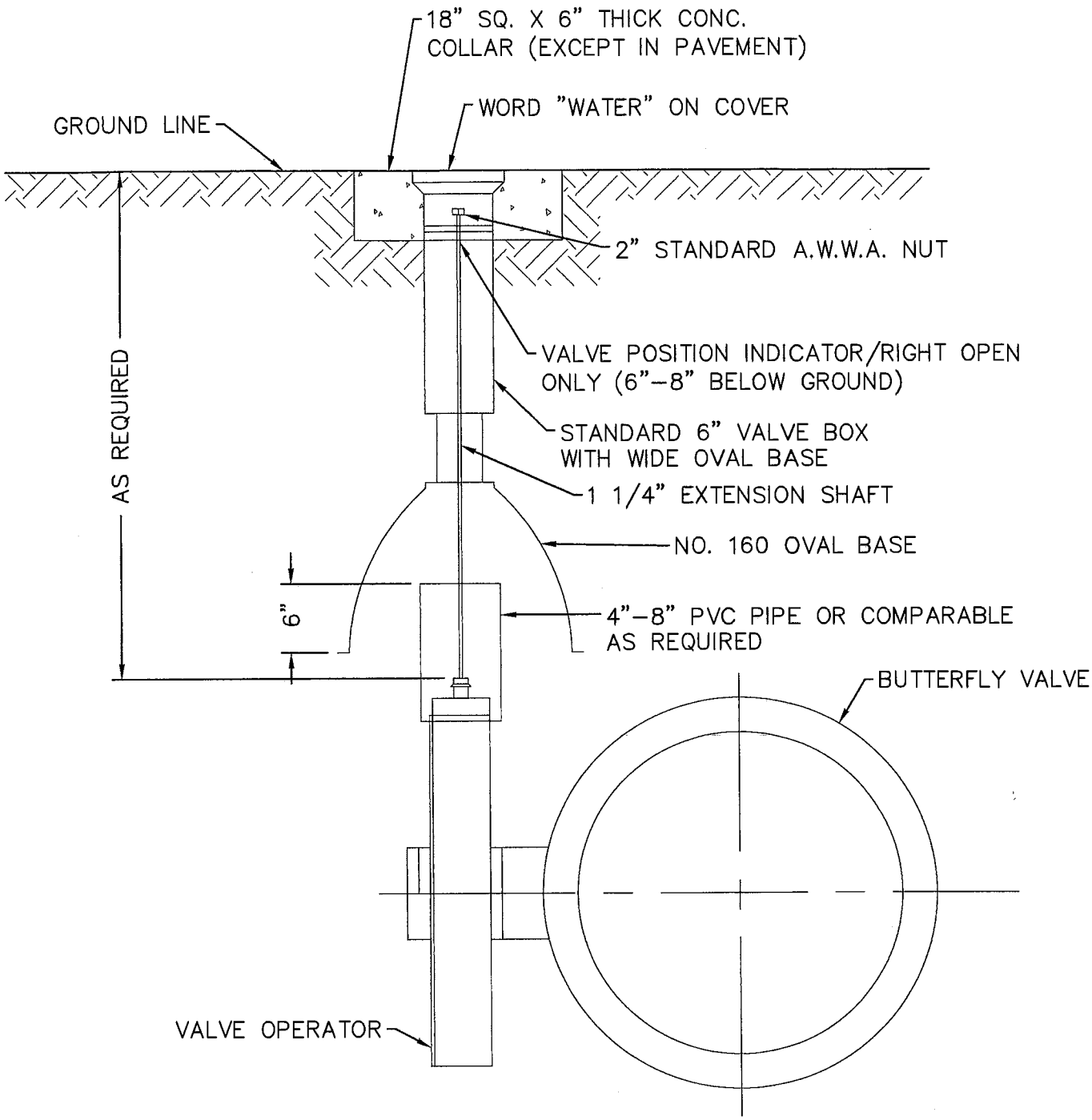

NOTE:
THE VALVE BOX SHALL NOT BE PLACED DIRECTLY ON THE SOIL PIPE. THIS TYPE OF INSTALLATION IS USED FOR 20" AND SMALLER VALVES ONLY. BUTTERFLY VALVE AND OPERATOR SHALL BE POLYETHYLENE WRAPPED

DATE 03/13	GREATROCK NORTH WATER AND SANITATION DISTRICT	GRN–18W
	DIRECT BURY BUTTERFLY VALVE INSTALLATION	

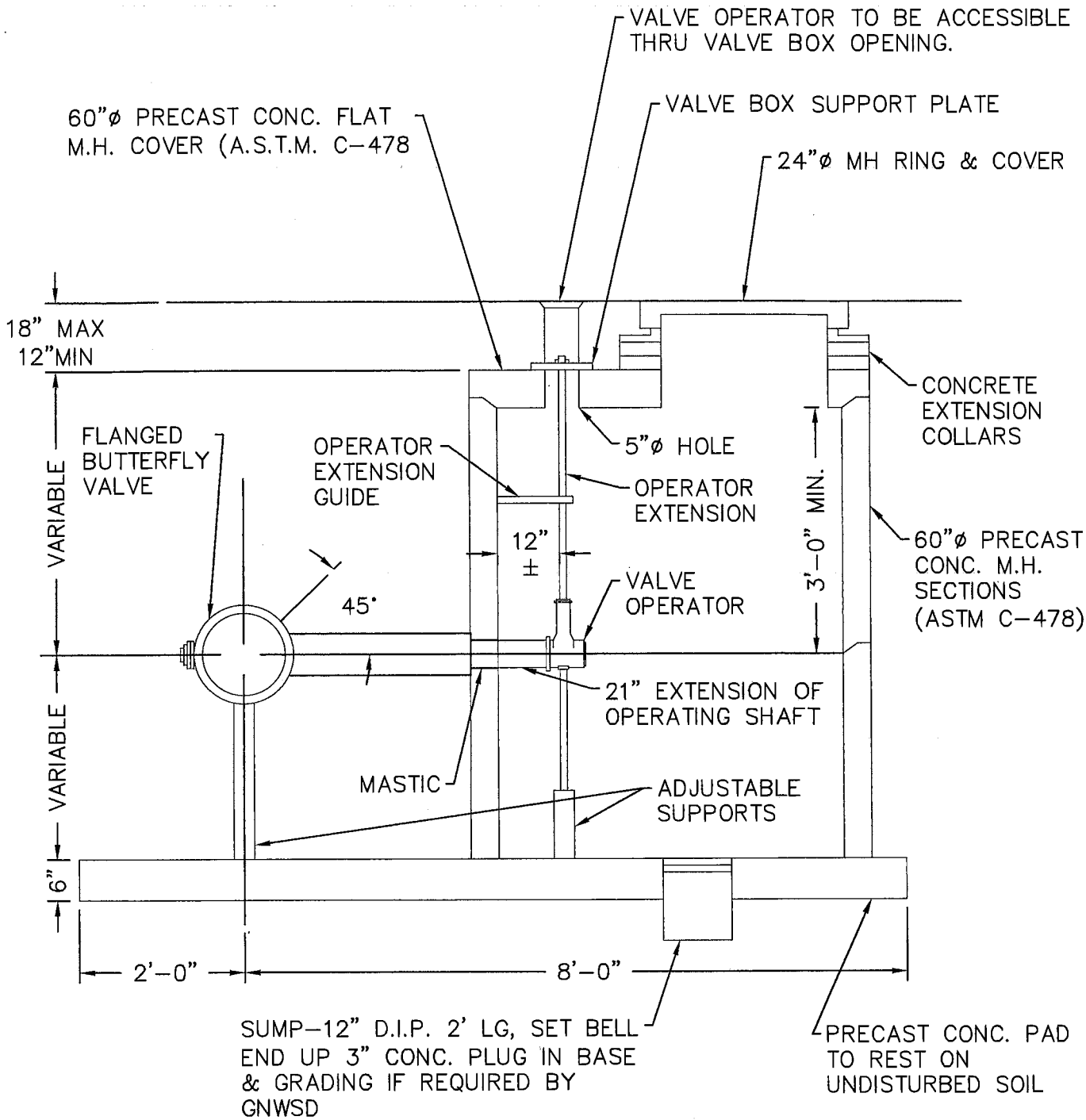

ELEVATION

NOTE:
1. PIPE AND VALVE SHALL BE POLYETHYLENE WRAPPED

DATE 03/13	GREATROCK NORTH WATER AND SANITATION DISTRICT	GRN-19W
	BUTTERFLY VALVE INSTALLATION: ELEVATION VIEW	

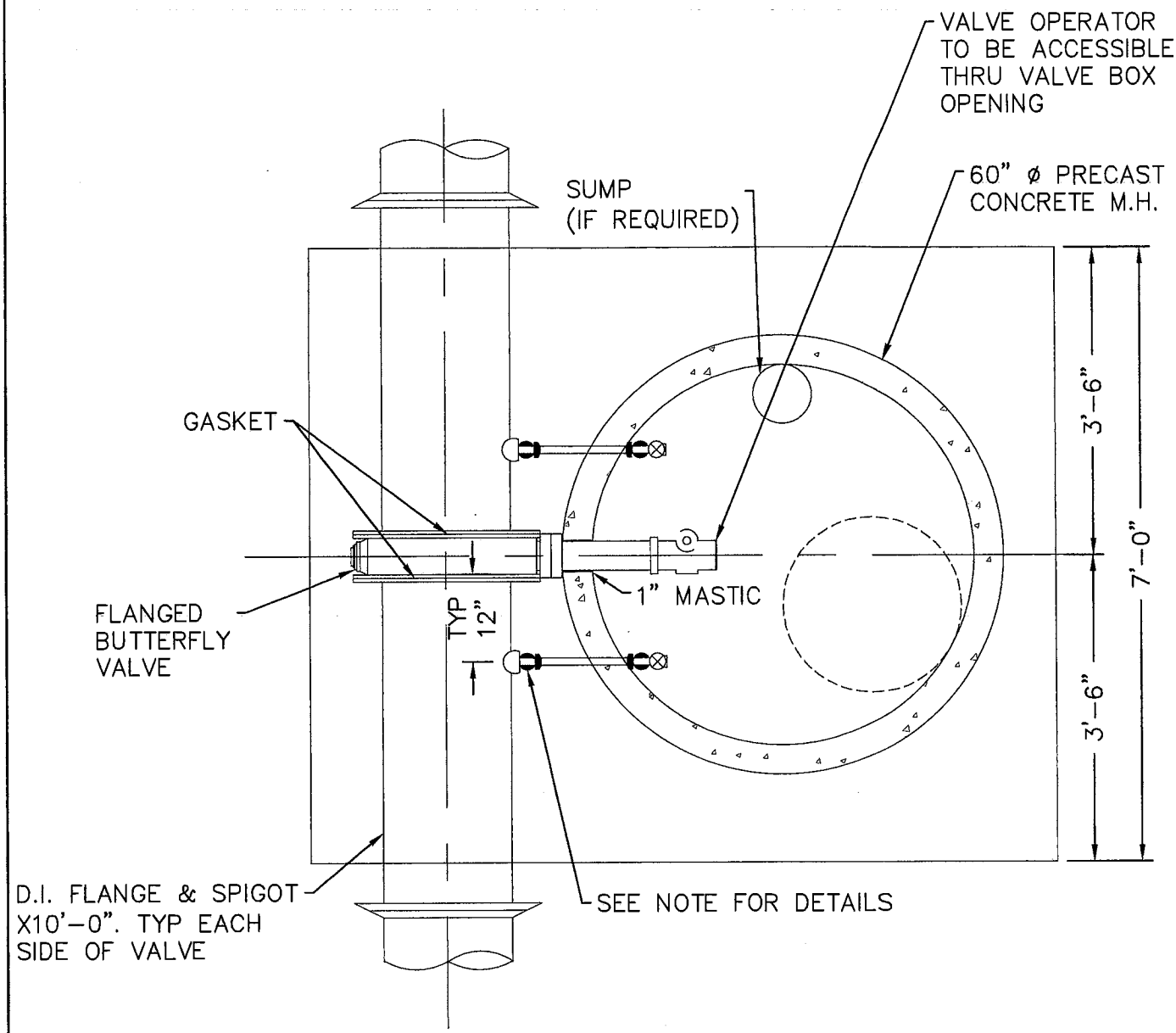

NOTE:
1 1/4" MUELLER CORP. STOP–MUELLER H–15000 & FIELD TAP (D.I.P ONLY)
FOR STEEL PIPE 1 1/4" THREADED OUTLET, 1 1/4" THREADED
CORP. STOP–MUELLER H–15025
1 1/4" COPPER TUBING TYPE "K"
1 1/4" COUPLING–MUELLER H–15425
1 1/4" THREADED GATE VALVE
1 1/4" AIR & VACUUM VALVE
(ONE EACH SIDE OF VALVE)

PLAN

DATE 03/13	GREATROCK NORTH WATER AND SANITATION DISTRICT	GRN–20W
	BUTTERFLY VALVE INSTALLATION: PLAN VIEW	

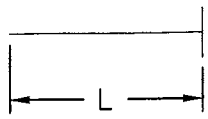

DEAD END

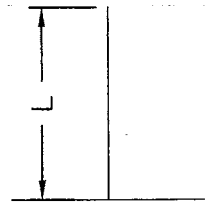

TEE

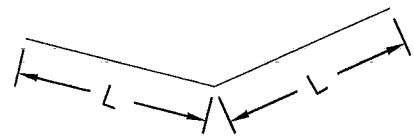

BENDS

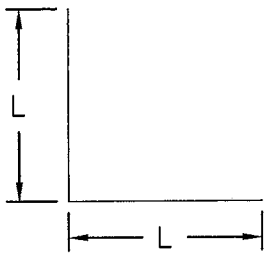

90° BEND

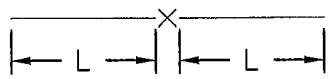

VALVE

ROD DIAMETER, GRADE, & LENGTH OF RESTRAINED PIPE

NOMINAL PIPE ø	4"	6"	8"	12"	16"	20"	24"
FITTING	L	L	L	L	L	L	L
90° BEND, TEE, DEAD END	30'	45'	60'	86'	108'	132'	155'
VALVE	30'	45'	60'	86'	108'	132'	155'
45° BEND	9'	13'	18'	25'	32'	39'	45'
22 1/2° BEND	2'	4'	5'	7'	8'	10'	12'
11 1/4° BEND	2'	2'	2'	2'	2'	3'	3'

NOTES:

1. LENGTH OF RESTRAINED PIPE MEASURED EACH WAY FROM VALVES AND BENDS.
2. MINIMUM 4.5' GROUND COVER REQUIRED.
3. BASED ON 150 POUNDS PER SQUARE INCH WORKING PRESSURE.
4. CROSSES MUST BE RESTRAINED IN ALL DIRECTIONS
5. WHEN REDUCERS ARE USED ON A VALVE INSTALLATION THE LENGTH OF THE RESTRAINT SHALL BE BASED ON THE SIZE OF THE PIPE, NOT THE SIZE OF THE VALVE
6. WHEN INSTALLING VALVES ON EXISTING MAINS 12" AND SMALLER, USE MECHANICAL JOINT RESTRAINTS IN ACCORDANCE WITH MS-29 ON INSTALLED VALVES AND ASSOCIATED FITTINGS. REMOVE ALL PUSH-ON JOINTS WITHIN THE EXCAVATION. LENGTH OF RESTRAINED PIPE GIVEN ABOVE DOES NOT APPLY.

DATE 03/13	GREATROCK NORTH WATER AND SANITATION DISTRICT	GRN-21W
	LENGTH OF RESTRAINED PIPE	

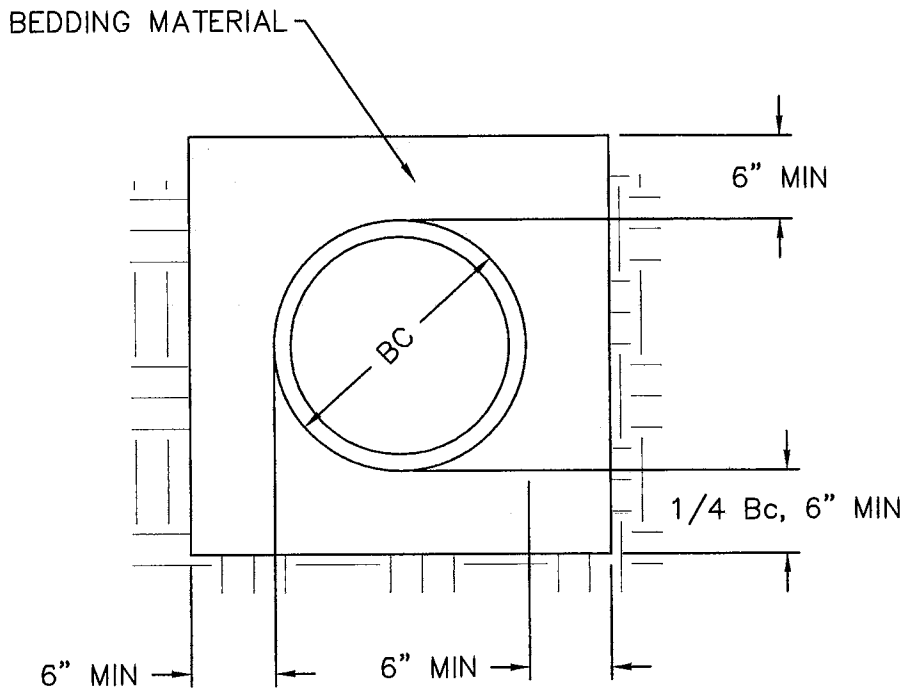

DATE 03/13	GREATROCK NORTH WATER AND SANITATION DISTRICT	GRN-22W
	PIPE BEDDING DETAILS	

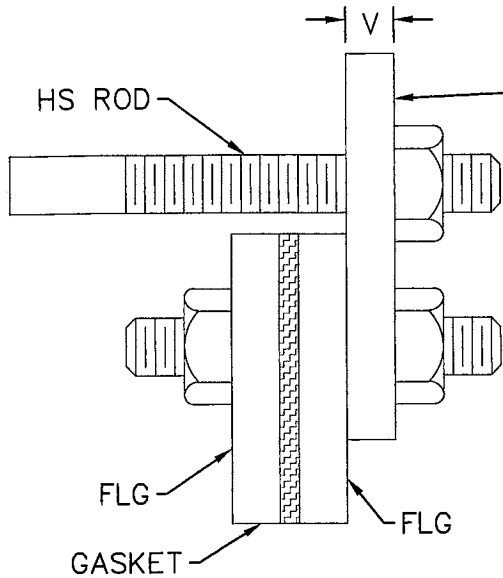

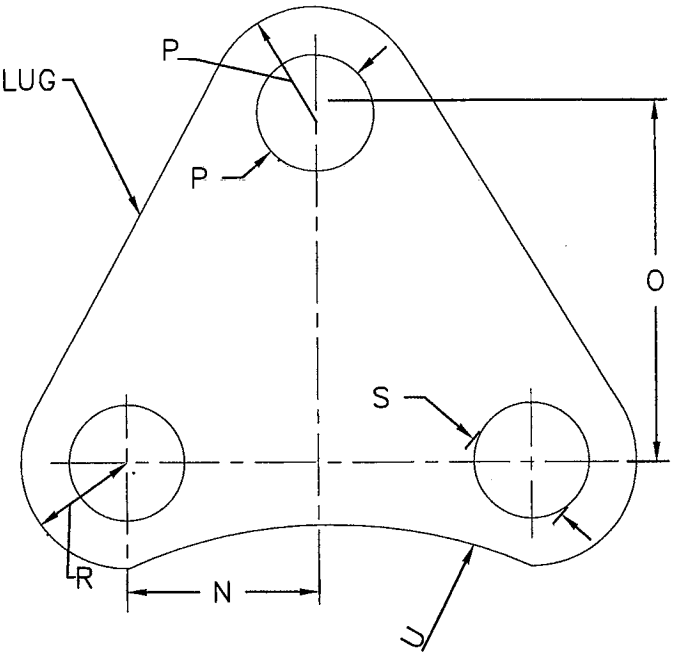

DIMENSIONS

(IN INCHES)

NOMINAL PIPE ø	N	O	HS RODS		R	S	U	V	NOMINAL PIPE ø
			P	ROD ø					
3	2 1/8	2 9/16	5/8	1/2	3/4	5/8	2 3/8	3/4	3
4	1 7/16	2	5/8	1/2	3/4	5/8	3 1/8	3/4	4
6	1 13/16	2 1/16	5/8	1/2	7/8	3/4	4	3/4	6
8	2 1/4	2 1/4	5/8	1/2	7/8	3/4	5 1/8	3/4	8
10	1 7/8	2 1/16	3/4	5/8	1	7/8	6 1/4	3/4	10
12	2 1/4	2 5/16	7/8	3/4	1	7/8	5 7/8	1	12
16	2 1/8	2 7/16	1 1/8	1	1 1/8	1	9 5/8	1 1/8	16
20	2	2 5/8	1 1/4	1 1/8	1 1/4	1 1/8	11 3/8	1 1/4	20

NOTE:
STEEL FOR FLANGE LUG SHALL BE ASTM A 36

DATE 03/13	GREATROCK NORTH WATER AND SANITATION DISTRICT	GRN-23W
	FLANGE LUG DETAIL	

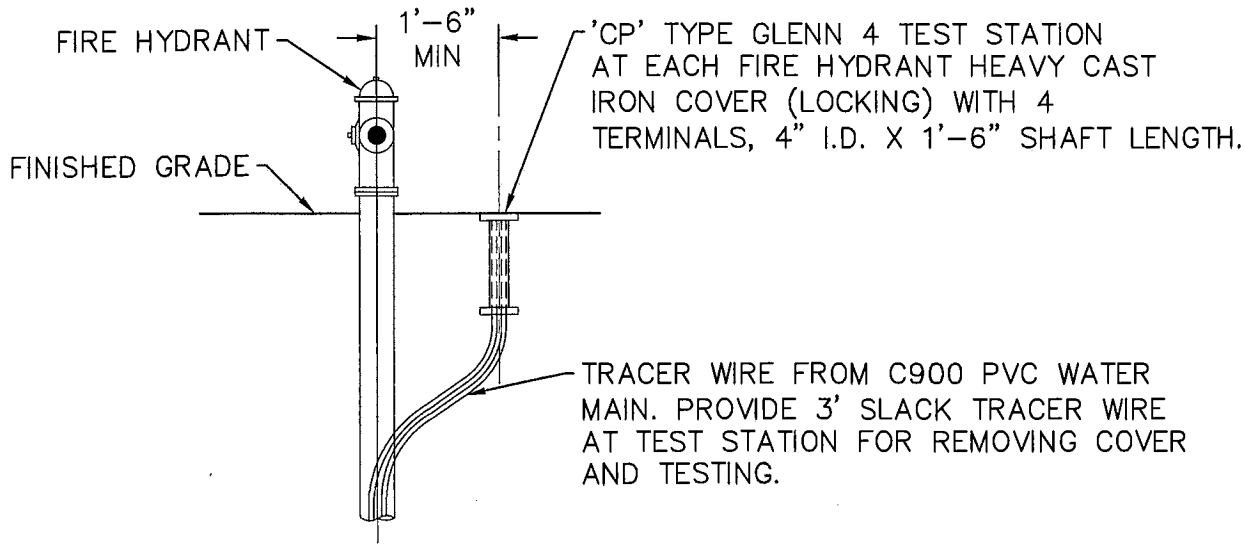

PROFILE

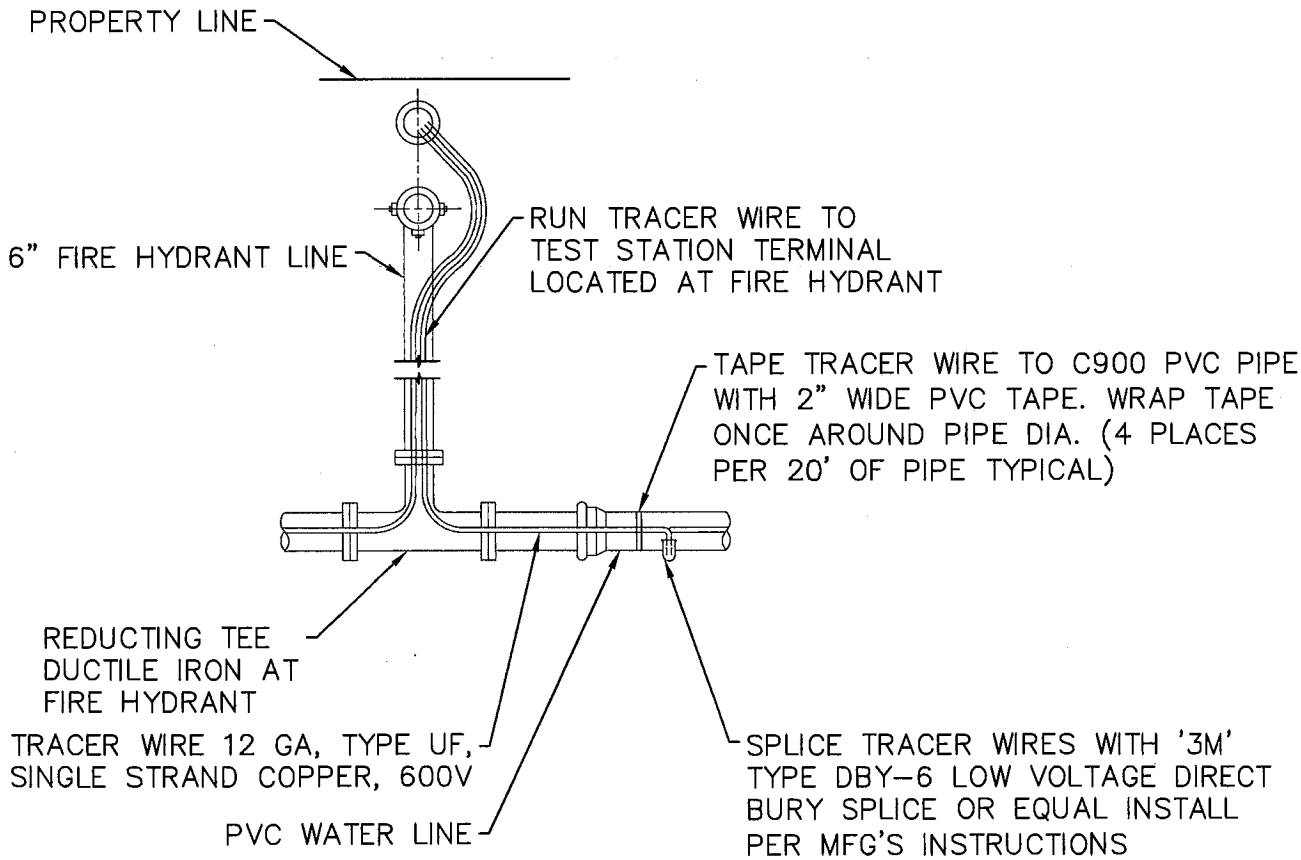

PLAN VIEW

PVC WATER MAIN TRACER WIRE INSTALLATION DETAIL

DATE 03/13	GREATROCK NORTH WATER AND SANITATION DISTRICT	GRN-24W
	TRACER WIRE DETAIL	