INFORM

Information Network for
Responsible Mining

PO Box 27
NORWOOD, CO 81423

(970) 859-7456
jennifer@informcolorado.org
www.informcolorado.org

July 22, 2016

Ms. Jennifer Opila
Radiation Program Manager
Colorado Department of Public Health & Environment
4300 Cherry Creek Drive South
Denver, Colorado 80260
Via email: jennifer/opila@state.co.us

Re: CDPHE Ablation Stakeholders Review Process

Dear Ms. Opila,

We appreciate Colorado Department of Public Health & Environment's request for public comment regarding the regulation of ablation technology and review of materials submitted by Black Range Minerals. Thank you for the opportunity to participate in this important process. Please find enclosed a report prepared by consultant Paul Robinson of Southwest Research and Information Center on behalf of INFORM, Colorado Citizens Against ToxicWaste, Inc., Coloradoans Against Resource Destruction, Sheep Mountain Alliance and Tallahassee Area Community, Inc. As you know, our organizations have been closely involved in uranium reviews and proposals involving the Department through the years. This additional report responds to the Department's request for information and comment on how the ablation technology should be regulated and is provided in addition to separate comment letters filed by our organizations.

Please publish these comments on the Department's ablation stakeholders web page and please feel free to contact me for further information or questions. We look forward to engaging with the Department on these issues as they continue to develop and new information is provided. Again, thank you for the opportunity to comment and we are appreciative of your consideration.

Sincerely,

Jennifer Thurston
Director, INFORM

Southwest Research and Information Center
PO Box 4524 Albuquerque, NM USA 87196
www.sric.org p 505-262-1862/f 505-262-1864

Ablation Mining Technology Review and Recommendations Regarding Regulatory Status

July 22, 2016

Submitted to
Colorado Department of Public Health and the Environment (CDPHE)
Jennifer Opila, Radiation Program Manager
4300 Cherry Creek South Drive
Denver, CO 80260
jennifer.opila@state.co.us

Pursuant to the CDPHE
Ablation Process Stakeholder Comment Invitation

on Behalf of
INFORM
Information Network for Responsible Mining
Jennifer Thurston, Director
Office: 970-859-7456
Email: jennifer@informcolorado.org

and
Colorado Citizens Against ToxicWaste, Inc.
Coloradoans Against Resource Destruction
Sheep Mountain Alliance
Tallahassee Area Community, Inc.
Uranium Watch

by
Paul Robinson
Research Director
Southwest Research and Information Center
PO Box 4524
Albuquerque, NM 87106-4524
email: sricpaul@earthlink.net
web: www.sric.org

Contents

I. Summary and Recommendations
II. Gaps in BRM Filings – Comments regarding accuracy and completeness of BRM filings
III. Conclusions
IV. Brief Biographical Sketch
V. References
Attachment 1 – Comparison of particle size and uranium content …
Attachment 2 – Particle Size Comparison Chart

Ablation Mining Technology Review and Recommendations regarding Regulatory Status

I. Summary and Recommendation

A. Summary

Colorado Department of Public Health and Environment (CDPHE) has established a process seeking stakeholder input regarding how Black Range Minerals' (BRM) Ablation Mining Technology (AMT) should be regulated if a future project is proposed. The Ablation Process webpage is at https://www.colorado.gov/pacific/cdphe/ablation-process-black-range-minerals. In this stakeholder process, CDPHE seeks input on "How does the regulatory structure apply? Is this a licensed process? If so how should it be licensed?" (CDPHE Slides, p. 6)

CDPHE is seeking input on the Ablation Process in response to a Black Range Minerals (BRM) initiative requesting that CDHPE issue a determination regarding the regulatory status and associated requirements for use of Ablation Mining Technology (AMT) to process ores from the Sunday Mine complex in Western Colorado described in its filings. (BRM WP, 1.1, 2.3, and 2.4)

While BRM seeks a determination of regulatory status for its AMT process, BRM's filings with CDPHE and NRC demonstrate that AMT is an emerging technology whose developers have not yet been able to address fundamental gaps in their filings including:

1) basic questions asked by CDPHE and NRC regarding the characteristics of liquid and solid product and by-product materials generated by the technology;
2) demonstrated levels of performance represented by BRM in its filings; and
3) identification of either locations or methods for permanent management and disposal of solid and liquid waste streams generated by BRM's AMT process.

As both CDPHE and NRC note in their responses to BRM filings, there is considerable uncertainty regarding:

- A detailed description of the actual process that a BRM AMT facility would use were an application filed,
- The characteristics of both the concentrated uranium product stream AMT generates and the solid and liquid waste streams left after the concentrated uranium product is separated from the rest of the ore and slurry the ore is mixed with during AMT,
- How the concentrated uranium product and the residues would be managed;

- The radiological contamination of equipment and infrastructure needed to receive, store, process the feedstocks, the concentrated uranium AMT product and waste streams; and
- The extent of potential exposures to releases from the AMT process, its products and its by-products, as BRM models BRM 1.1 have not been verified by field checking at operating AMT sites.

B. Recommendations regarding Regulatory Criteria applicable to BRM's AMT process

BRM's AMT documents (WP, 1.1, 2.3) filed with CDPHE discuss using AMT to process uranium ore containing more than 0.05% natural uranium to generate both:

1) A product that contains concentrated uranium minerals – as "uranium-rich fines," particles smaller than 37 microns – and other minerals mixed with water; and
2) A much larger volume of solid and liquid waste streams containing a residual portion of the uranium, uranium decay products and associated heavy metals in the ore.

BRM describes the purpose of development of AMT is to produce a "low volume fine-ore product can then be economically transported offsite to produce yellowcake at a conventional processing facility". (Scriven 2014, P. 4)

Despite the uncertainties throughout BRM's filings about the specific nature and characteristics of the concentrated uranium product and the solid and liquid by-products of AMT (some of which are identified and discussed below), a comparison of key elements in BRM's AMT process with CDPHE's regulatory requirements is clear enough to identify the applicable licensing status for that process.

These include:

- BRM's AMT would be operated at a "facility" where the equipment to operate the AMT process is located, and would need other "facilities" for management of solid and liquid waste;
- BRM's AMT would process "source material" – ore with uranium content greater than 0.05% to produce a concentrated uranium product;
- Separation of the ore into a low-volume, concentrated uranium product (10 times the uranium concentration of the ore) and a higher-volume "by-product material" in the form of liquid and solid wastes that contain a significant portion of the radioactive and non-radioactive constituents of the source material processed;
- BRM's AMT circuit includes crushing technology to process run-of-the-mine ore prior to the high-impact ablation phase of AMT and separation processes including sand filters, "sand traps," filter presses and centrifuges (BRM 2.3 at P. 3) among the post-ablation processes necessary to separate the fine grained uranium-rich ablation product from more voluminous liquid waste and coarser solid by-products;
- BRM's AMT is an "activity that results in the production of radioactive material that meets byproduct material definition," and therefore meets the definition of "uranium milling" in CRR 18.2 and should considered "source material milling" and subject to the full scope of the regulatory requirements for a "source material milling license;"
- Like the uranium oxide (yellowcake) product of uranium milling or the resins shipped from in situ leach uranium mines, the AMT product is sent forward into the multi-stage nuclear fuel chain for further processing in a useful, final product.

Each of the terms in "quotes" above is a term from the Colorado Radiation Protection Regulations (6 CCR 1007-1 Parts 1 – 18, "CRR" posted by CDPHE at https://www.colorado.gov/pacific/cdphe/radregs).

A plain language reading of the rules shows that a "facility" (defined in 18.2) that concentrates uranium from "source material" (defined at 1.2.2) and generates "by-products materials" (defined at 1.2.2) in the form of liquid and solid wastes with radioactive and hazardous constituents is conducting "uranium milling" (as defined in 18.2) and should be regulated pursuant to the requirements for "source material [uranium] milling" (defined at 1.2.2).

Licenses for "source material milling" require an application and other filings as described in CRR Part 1 -18 including through baseline studies, detailed plans and designs for proposed operations, characterization of liquid and solid effluent "by-products," and reclamation plans and financial assurance.

The responses to BRM AMT's filings to date by CDPHE and NRC staff posted on the CDPHE "Ablation Process" page demonstrate that the information provided by BRM does not address the full scope of agency requests for information. The Agencies' requests for information and comments identify areas of interest related to the requirements of CDPHE and NRC regulations for "source material milling specific licenses." The Agencies' requests for information will need to be addressed before any application for such a license for an AMT facility could be considered complete enough for detailed review.

The "high-energy impact" ablation process is not a "stand-alone process" as AMT is described by BRM, it is one of a series of processes that are integrated together in the Ablation Mining Technology (AMT) plan described by BRM. Ore preparation and liquid and solid separation processes include:

- the initial crushing of run of the mine ore to 6.35 mm – 0.25 inch – size before it is mixed with water prior to the high energy impact phase and
- the separation systems, including but not limited to sand traps – filters, filter presses and centrifuges – needed to sort the fine "uranium-rich" AMT product from the coarser solid by-products and liquids remaining in the ore and waste solids, are all processes that are essential to BRM's AMT process as described.

Regardless of any determination regarding the regulatory status of AMT as BRM currently describes it, BRM will remain free to modify its AMT process and change the nature of the process and its associated uranium-rich products and liquid and solid by-products from that currently presented. Any regulatory determination resulting from the CDPHE Ablation Technology Stakeholder Process could only address the current scope of information before the CDPHE at this time. The need for a formal licensing process is highlighted because the actual scope of any future filings with CDPHE by BRM or other AMT proponents, such as a "source material milling license application," cannot be known or predicted based on the information currently posted on the CDPHE Website.

II. Gaps in BRM Filings - Comments regarding accuracy and completeness of BRM filings

BRM has provided filings regarding AMT to CDPHE and NRC from its "White Paper" and from its technical staff and consultants. Several key representations in the "White Paper" ("BRM WP") filed by BRM legal counsel contrast sharply with, and are not supported by, statements from BRM technical staff and consultants.

A) Uranium recovery from ore – BRM test data does not demonstrate AMT attainment of 90% uranium recovery

BRM WP at p. 6 says, "Upon separation, the waste rock stream typically comprises approximately ninety (90) percent of the mass but contains only about five (5) percent of the uranium (and any other minerals) that was present in the pre-AMT material. Logically, the ore stream comprises the balance of the mass (~10%), and contains the balance of the uranium and other minerals that coated and cemented between individual sand grains prior to AMT (~95%)."

The CDPHE staff summary of discussions with BRM staff in an attempt clarify information in BRM filings (Wang 2016) sought to verify the assertion that,

"the waste rock stream typically comprises approximately ninety (90) percent of the mass but contains only about five (5) percent of the uranium (and any other minerals) that was present in the pre-AMT material."

CDPHE staff found, as stated in Wang 2016, that,

"Based on the October ore lab results, the uranium in the post-AMT ores is only about 62% of the ones in the pre-AMT ROM. This is not consistent with 90% of uranium recovery rate as indicated in the July 2015 white paper, or the 85%-95% of uranium recovery rate as shown in Attachment 2.2 of the April 16 response."

Wang 2016 includes a Table 1 that provides BRM test results for uranium content and particle size distribution. Table 1 shows the distribution of uranium between the post-AMT ore – the concentrated uranium product of AMT – and the uranium remaining in the waste rock and waste water ("post ab water") following AMT process for separation of uranium from the ore. Wang 2016 reports that,

"Table 1 shows 62.49%, 6.92%, and 9.9% of uranium in the post-AMT ores, waste sands, and water, respectively. However, it also shows that there is 20.7% of uranium that did not get recovered."

Wang 2016 summarizes BRM explanation of this data noting,

"Black Range thinks that the missing 20.7% of uranium within the missing 1666.53 grams of solids are dominated by the size of -400 particles (i.e., post-AMT ores), because the uranium grade of these missing solids is 3650 ppm, much similar to the 4590 ppm of the -400 post-AMT ores than the post-AMT waste sands with different screening sizes."

Table 1 and the related discussion show that more than 15% of the original uranium in the ore remained in the solid waste and waste water by-products of AMT as tested and 20.7% is "missing" – not accounted for.

Wang 2016 says, "Black Range believes that AMT can recover >90% of uranium, if accounting for the uranium in most of the missing solids and in the post-AMT water. Black Range thinks that the uranium in the post-AMT water is recoverable." Wang 2016 reflects what BRM staff "believes," but

does not provide or identify data that demonstrate that what BRM "believes" can be achieved, or has actually been achieved.

Additional testing of the AMT process, and perhaps additional modifications to the process, will be necessary to demonstrate 90% recovery of uranium, as the data provided by BRM to CDPHE that is presented in Wang 2016 fails to demonstrate. The lower the uranium recovery rate for the AMT process is, the higher the uranium content of solid tailings and wastewater from the process will be.

As the BRM data summarized by Wang 2016 does not include chemical characterization of the water used in the AMT test and was conducted with a feedstock that has half the uranium content of the Sunday Mine ore, the BRM data is both incomplete in critical areas and based on the processing of a uranium ore feedstock that does not have characteristics of the Sunday Mine complex ore BRM filings discuss as a target for the AMT.

B) The material referred to as "clean sands" by BRM is neither "clean" nor all "sands," and has both physical (particle size distribution) and chemical (radioactive and heavy metal content) characteristics similar to uranium mill tailings.

BRM WP at P. 1 says, "After this disassociation is complete, the coarse sand [grains] can be screened from the mineral fines, producing cleaned sand grains and uranium mineral ore fines." "Clean sand" appears to describe the individual sand grains gleaned from the uranium. Neither the words "clean" nor "sand" are reasonably accurate terms for a description of the waste rock and other solid and liquid residues from AMT, as other BRM filings demonstrate that the residue are not "clean" and contains an important component of finer grain material – called "slimes" in the context of mill tailings – than can be reasonably called "sand."

BRM 1.1 at p. 5 Table 1 lists the uranium content of the waste rock on the storage pad at the AMT facility as 0.01%, based on an assumption of 96% recovery of uranium from 0.25% ore. A uranium content of 0.01% is equivalent to 100 parts per million (ppm).

Can the waste rock from AMT processing that contains 100 ppm uranium reasonably be called "clean"?

No, not if the uranium content of AMT wastes are compared to the average content of uranium in rocks around the world. The average uranium concentration in the earth's crust is 2.8 ppm as reported by New Mexico Tech, among many other sources. The 100 ppm uranium content of the solid waste projected to be generated from the AMT facility is more than 30 times the average crustal uranium content and similar to typical uranium mill tailings. Waste rock with thirty times the natural average uranium content is not reasonably called "clean."

And the answer is No, the "clean sands" are not clean as their uranium content of 100 ppm (0.01%) is at the high end of the uranium concentration of typical tailings "sands." (EPA 2008) A table summarizing "typical characteristics of uranium mill tailings" is provided below from USEPA 2008, "Technical Report on Technologically Enhanced Naturally Occurring Radioactive Materials from Uranium Mining Volume 1: Mining and Reclamation Background", USEPA, 2008 revision, Table 3.13 at p. 3-30 available at https://www.epa.gov/sites/production/files/2015-05/documents/402-r-08-005-v1.pdf.

Table 3.13. Typical Characteristics of Uranium Mill Tailings

Particle sizes, chemical compositions, and radioactivity levels are presented in this table[a]. Individual mill impoundment materials can and will vary dependent on ores and mining or extraction processes used.

Tailings component	Particle size (µm)	Chemical composition	Radioactivity characteristics
Sands	75 to 500	SiO_2 with <1 wt % complex silicates of Al, Fe, Mg, Ca, Na, K, Se, Mn, Ni, Mo, Zn, U, and V; also metallic oxides	0.004 to 0.01 wt % U_3O_8[b] Acid leaching:[c] 26 to 100 pCi ^{226}Ra/g; 70 to 600 pCi ^{230}Th/g
Slimes	45 to 75	Small amounts of SiO_2, but mostly very complex clay-like silicates of Na, Ca, Mn, Mg, Al, and Fe; also metallic oxides	U_3O_8 and ^{226}Ra are almost twice the concentration present in the sands Acid leaching:[c] 150 to 400 pCi ^{226}Ra/g; 70 to 600 pCi ^{230}Th/g
Liquids	*d*	Acid leaching: pH 1.2 to 2.0; Na^+, NH_4^+, SO_4^{2-}, Cl^-, and PO_4^{3-}; dissolved solids up to 1 wt % Alkaline leaching: pH 10 to 10.5; CO_3^{2-} and HCO_3^-; dissolved solids 10 wt %	Acid leaching: 0.001 to 0.01% U; 20 to 7,500 pCi ^{226}Ra/L; 2,000 to 22,000 pCi; ^{230}Th/L Alkaline leaching: 200 pCi ^{226}Ra/L; essentially no ^{230}Th (insoluble)

Source: U.S. DOE (1997)

The Table of "Typical Characteristics of Uranium Mill Tailings", from EPA 2008 shows 0.01% to be the upper end of the uranium content range for the sand fraction "component" of uranium mill tailings, well within the uranium content range of the slimes and liquid fraction of uranium mill tailings. As the "particle size" column in the EPA 2008 Table shows, "slimes" are composed of finer particles than "sands" and typically contain more uranium than sands, "almost twice the concentration present in sands."

The confusion caused by the use of the term "clean sands" can be avoided by recognizing that the AMT waste solids contain considerably more than "clean sand" from which uranium has been separated. Significantly, the AMT waste solids contain more than sand size particles. BRM's AMT process proposes to separate the very fine, less than 37 microns – less 400 mesh – particle size fraction of the AMT solids as the "uranium rich fines" and manage the remaining solids as waste. The solid waste left after separation of the less than 37 microns AMT product will contain all of the solid material larger than 37 microns. This solid waste will, therefore, include all of the material called "slimes," a common term for the fine particle fraction of tailings, in the 45-75 micron particle size range, shown in EPA 2008 Table 3.13.

Attachment 1 to this Review, Comparison of particle size fractions and uranium content in Wang 2016 Table 1 – "Results compared to Original ROM Mass" provided by BRM with uranium mill tailings (UMT), provides a Table comparing the particle size – by "sieve size" and "particle size" – and uranium content of the BRM wastes presented in Wang Table 1 and those of typical uranium mill tailings in EPA 2008 Table 3.13. This table used the uranium mill tailings characteristics from EPA 2008.

As presented in Attachment 1, Wang 2016-Table 1 shows a distribution of the volume of AMT-generated uranium concentrate and waste rock by particle size based on BRM test data. Attachment 1 shows the particle size range groups associated with the "mesh" or "sieve size" groups identified in Wang 2016-Table 1. Attachment 2 to this Review, Particle size comparison chart, is a chart from the Unites States Geological Survey that provides conversions from mesh and sieve size to particle size in millimeters. A comparison of the particle sizes between Attachment 1, Wang 2016-Table 1, and Attachment 2 shows that the fraction of waste materials with less than 230 mesh size – 0.062 mm or 62 micron particles – is defined as "silt", not "sand."

Wang 2016-Table 1 indicates that the finer particles that remain in the post-AMT waste contained 350 – 421 ppm uranium, 3 – 4 times higher than the 100 ppm (0.01% uranium content) assumed for waste rock in BRM 1.1-Table 1. Attachment 1 and Wang 2016-Table 1 shows the uranium content of the finer particle components – the "slimes" and fine sands – have a uranium content more than twice that of the "sands", similar to the higher uranium content of slimes versus sands in typical uranium mill tailings described in EPA 2008 Table 3.13.

To clarify the relationship between particle size and sieve size, Attachment 2 provides correlations of particle sizes and mesh or "sieve sizes" used in the BRM AMT filings. The "mesh" size used by BRM can be compared to the column titled "Sieve Size – ASTM No. (US Standard") with the size of the "mesh openings" in millimeters in the first two columns title "PHI – mm Conversion" and millimeters. The Chart notes that "1 um [micron] = 0.001 mm".

The ASTM Standard defines "coarse sands", the term used to describe the waste solids generated by AMT in the BRM "White Paper," as 0.5 – 1 millimeter (500–1000 micron) grain size. The AMT waste solids will contain all the material from the "coarse sand" size down to and including the "coarse silt" – as BRM proposed to separate only the less than 400 mesh – less than 37 micron – AMT product from the waste solids. "Coarse silt" is identified as <230 mesh equivalent to less than 0.62 mm, less than 62 microns.

All of the material in "tailings slimes" fraction of uranium mill tailings – 45–75 micron grain size – plus all of the material called "sands" in the EPA Table of "typical characteristics of uranium mill tailings" are found in the AMT solid waste that BRM calls "clean sands."

The size of particles in the AMT waste solids is not merely a matter of terminology, as differently sized materials have different characteristics related to particle separation, residual content of uranium and other heavy metals, drainage rates, and structural strength when used in construction. Accurate characterization of a solid waste's physical particle size and chemical properties is fundamental to effective management of the solids as finer particles. "Silts" and "slimes" have different properties relevant to waste storage and disposal and contaminant release than coarser particles like "sands." Significantly for the BRM AMT process, simple screening is not effective for separation of the fine uranium-rich AMT product from the slimes and sands.

Failure to accurately characterize the residual uranium content of the waste rock as similar to uranium mill tailings, rather than as "clean sands," is significant error in the BRM AMT material.

C) Separation and dewatering not achievable by screening

The BRM WP at p. 1 asserts that screening is the only separation process required at AMT facilities to sort the fine uranium concentrated solids from the AMT process stream of mixed solids and liquids. In sharp contrast, screening is not the separation technology currently proposed for the AMT system, according to the BRM contract report 2.3 – Detailed Description.

BRM WP P. 5 asserts, "Th[e AMT] slurry can be subjected to separation by physical screening,[2] based on grain size, where the finer ore minerals are separated from the coarser waste rock" with footnote 2 adding,

"2) It is important to note that NRC's new general license rule states that screening is not considered to be a "processing" operation."

BRM 2.3 at p. 3 identifies a series of separation technology necessary to separate the fine solids with concentrated uranium from the rest of the solids and liquids generated by the AMT process in lieu of screening. BRM 2.3 says,

"Vibratory screeners were initially the separation method of choice but are no longer intended to be employed at the SMC operation due to their physical size and present limitations of the SMC's underground setting.

"A slurry effluent stream pumped from the final AMT impact module which maintains its initial solids to water mass ratio of 20% is piped into a series of separators. The separators include a number of sand traps, self cleaning filters, and then centrifuges, cyclones or other momentum based particle size separators. Within this series of separators, material larger than 37 microns is removed as a moist post AMT waste and material smaller than 37 microns continues with the water stream to the ancillary system component referred to as dewatering. Post separation and pre dewatering the fines-only slurry stream is approximately 5 % solids and 95 % water by mass."

Screening is not an effective technology for separating the very fine – less than 37 microns in diameter – particles that the AMT process seeks to concentrate from the mixture of liquids and solids because such fine particles clog up screens.

D) Currently, and for the reasonably foreseeable future, the uranium content of BRM ores is significantly more valuable than vanadium in ore

BRM WP at p. 8 asserts that, "In Colorado's Paradox Valley vanadium minerals are typically 4 to 10 times the amount of uranium in vanadium-uranium deposits. This dynamic can produce ores that are more valuable for the vanadium and thereby essentially make uranium an economic secondary product." The vanadium content of the Sunday Mine ores is used by BRM to assert that AMT wastes are not properly regulated as "by-product material" if the wastes result from ore processing not primarily for uranium recovery.

BRM's assertion that the value of the vanadium in the ore to be processed by AMT is higher than the value of the uranium, and therefore processing the ores with higher vanadium rather than uranium values would be processing NOT primarily for its uranium content, is not supported by current information on uranium and vanadium values.

Current vanadium pentoxide prices are in $2-3.00/pound range according to USGS's April 2016 Mineral industry Survey for Vanadium available at http://minerals.usgs.gov/minerals/pubs/commodity/vanadium/index.html#mis.

(Vanadium oxide is the form of vanadium produced at the White Mesa uranium mill when operating its vanadium circuit.)

This price is far less than, at only 10%, of the $25.00 spot market price for uranium quoted by TradeTech, a provider of uranium prices and analysis since 1968, at www.uranium.info, for July 15.

The value of vanadium production at the Sunday Mine has not been sufficient to sustain production during the past four decades, and is far lower than the value of the uranium per pound, though the value of uranium may not be high enough to sustain commercial production whether by AMT or other methods.

Were the uranium content of the ore 0.25% (5 pounds per ton) and the vanadium content of the ore 1.0% (20 pounds per ton) the vanadium would be worth up to $60/ton and the uranium at $26.80/pound would worth up to $134/ton, more than twice the value of the vanadium in the ore. The value of the vanadium in the Sunday mine ore is of secondary importance compared to the value of the uranium content of the ore.

The ore processed by BRM AMT during its tests contained 1350 ppm uranium and 2520 ppm vanadium (BRM 2.4 at p.25/42) , a vanadium to uranium ratio of 1:8, has a much lower vanadium value that the 4:1 – 10:1 vanadium to uranium ratio ores discussed in BRM WP.

E) Water chemistry – water quality, quantity and chemistry – aspects of AMT are not identified in sufficient detail for source material milling license application acceptance as complete

BRM WP pays very little attention to the management of the liquids in its discussion of the AMT process. BRM WP at P. 5 notes that:

"After disassociation, the post-impact slurry stream comprises a mixture of coarse-grained waste rock (sand grains), finer-grained disassociated ore, and water."

Similarly, at P. 6,

"After separation, each fraction is dewatered to the extent practical, leaving three post-AMT products: a dewatered fine-grained ore fraction, a dewatered coarser-grained waste rock fraction, and a water stream which typically will be recycled through the AMT system."

And at P. 9, BRM WP concludes,

"A key characteristic of AMT is that it is a purely mechanical process. The sandstone material in AMT is simply mixed with water. No chemicals or reagents are added to the system. As a result, there is no chemical change to the materials in AMT, and no new chemical compounds are created. Within the context of AMT of sandstone-hosted uranium deposits, this means that the sandstone host rock is not chemically altered during AMT. Without chemical change, the elemental, mineral and physical properties of the host rock remain constant throughout AMT."

This simplified view of the nature and management of the liquids associated with AMT contrasts sharply with the discussion of the complexity and uncertainty related to AMT process water chemistry in BRM 2.4 "Water in the AMT Operation" and Wang 2016.

The water chemistry section of BRM 2.4 identifies both:

1) Changes in water chemistry that are likely to occur in the AMT liquids, including the mix of uranium minerals associated with the AMT process due to the increase in the amount of fine particles and changes in the water chemistry that are measureable as parameters of

"Total Dissolved Solids" (TDS) and "Total Suspended Solids" (TSS). These changes can result in chemical changes in the liquids that affect the chemical form and solubility of the uranium in the AMT slurry and the uranium recovery methods needed to further concentrate the uranium-rich product generated by AMT. Changes in chemistry associated with increases in TDS and TSS also can cause physical problems with the AMT equipment such as scale – "salt deposit accumulation" -- and corrosion of AMT equipment.

2) The necessity of additional testing to accurately define the hydrochemistry of the AMT slurry, the liquids in the AMT uranium-rich fines and the AMT waste stream, the type of scale and corrosion likely to develop in AMT equipment – such as clogging of ablation system nozzles – and their management.

The lack of quantitative information about the quality and quantity of water that would be involved in AMT leads to the discussions summarized in Wang 2016, a CDPHE staff summary of responses to questions posed to BRM regarding AMT filings.

Wang 2016 reports that BRM's AMT filings do not identify the quality of either the influent or effluent waters associated with the AMT operations described by BRM. Similarly, Wang 2016 reports that BRM has no plans for the management of the liquid or solid waste streams that would be generated by the 20-ton per day operation discussed by BRM.

Wang 2016 at P. 1 clearly identifies BRM's total lack of plans for AMT wastewater management, reporting that, in response to the question,

"…How does Black Range plan to handle the residuals if the water will be treated?"

Wang 2016 concludes that,

"A: Black Range anticipates recycling the water in the AMT system for a number of times until the quality of the water (such as Total Dissolved Solids) reaches a level that might cause negative effects to the system, such as corrosion, so that the water needs to be replenished. This defines the system charge replenished water. [BRM] Attachment 2.4 indicates 20 cycles as a typical number in the industry; however, Black Range will test run the water in the AMT machine to determine how many cycles the water can run through the AMT system before it needs to be replenished, prior to operation. Assuming 20 cycles, there will be up to 6750 to 16350 gallons of waste water that needs to be handled at the end of each working day (again, assuming 10 working hours per day). <u>Black Range has not decided whether the waste water will be recycled back to the system, stored in the facility, treated, shipped to other mills, or disposed of in a way that follows applicable regulations. Black Range has not decided how it will handle the residuals."</u> (Emphasis added.)

Wang 2016 at P. 2 clearly identifies BRM's lack of information about the quality of water used in its AMT test, including the quality of water entering the AMT process and the quality of the waste water to be generated by AMT where, in response to the question,

"Was the mine water treated or filtered before running through the pilot AMT system?"

Wang 2016 concludes that,

"A: Yes; however, there was no sample taken from the pre-AMT water and the water quality after treated or filtered is unknown. Black Range believes that the water might have been treated or filtered to near the pure water quality."

BRM 2.4 at P. 3 provide general but not specific water quality information when it notes that,

"Water used for the AMT test was from a shallow (less than 200 feet deep) well which at the time provided all the water for the testing facility. The water was run through a number of preliminary filters, infrared bacteria disinfection, and reverse osmosis prior to being stored for

use."

The BRM 2.4 p. 4-5 discussion of Water Chemistry at the Sunday Mine Complex fails to identify the quality of water used in the AMT test reported by BRM or the quality of water needed for future AMT operations.

F) BRM's test shows process water, waste water and waste rock leachate generated by AMT exceed Colorado's Maximum Contaminant Levels for uranium, radium, gross alpha radiation, and arsenic

BRM 2.4 at Table 1, provides "October Ore Pile Reclamation Mine Ore Uranium Concentration and Radiological Results For Post AMT Water". The table does not provide the Colorado maximum contaminant levels ("MCL") for the uranium, radium and gross alpha parameters listed in the table.

CCR 11.22(2) identifies MCL Requirements for Radionuclides at Table 11.22-I as:

Contaminants	MCL
Gross alpha (inc. Ra-226 exc. Rn and U	15 pCi/l
Combined Ra-226 and Ra-228	5 pCi/l
Uranium	30 ug/l = 0.030 mg/l

BRM reported in BRM 2.4 Table 1, water quality data for "October Post Ab" water, the water BRM "considered the most representative of post AMT water for uranium ore of Colorado Plateau type uranium deposits" labeled "October Post Ab" water. Wang 2016 defined CDPHE's understanding of "October Post Ab" water to be "the water sample taken after all post-AMT sands (solids with size larger than -400) have been screened out; therefore, this water only contains the post-AMT ores and the water that ran through the system."
BRM 2.4 Table 1 "October Post Ab" water contained:

- 3.25 mg/l of dissolved uranium – 108 times the Colorado uranium MCL,
- 3.58 mg/l total uranium – 119 times the Colorado uranium MCL ,
- 2940 pCi/l of gross alpha radiation – 196 times the Colorado gross alpha MCL and
- 161 pCi/l of radium -226 – more than 10 times the CO combined radium-228 and 228 MCL.

The liquids associated with the uranium-rich "post Ab" stream generated by the AMT test exceed Colorado MCLs by a significant margin; the liquids contain more than 100 times the MCLs for gross alpha radiation, combined Ra-226 and Ra-228 and uranium.

BRM 2.4 Table 1 also identified "ABT October Post Screen" water. Wang 2016 defines "ABT October Post Screen" water to be the water sample taken from the water that immediately came out from the AMT system; therefore, this water contains all post-AMT solids and the water that ran through the system. In Table 1, "ABT October Post Screen" water is shown to contain:

- 3.14 mg/l of dissolved uranium – 105 times the Colorado uranium MCL ;
- 8.31 mg/l total uranium – 277 times the Colorado uranium MCL ,
- 2010 pCi/l of gross alpha radiation – 134 times the Colorado gross alpha MCL and
- 556 pCi/l of radium -226 – more than 37 times the Colorado combined radium-228 and radium-228 MCL.

As is the case with the "October Post Ab" liquids, the "ABT October Post Screen" liquids generated by the AMT test exceed Colorado MCLs by a significant margin; the liquids contain more than 100 times the MCLs for gross alpha radiation, combined Ra-226 and Ra-228, and uranium.

BRM 2.4 Table 2 reports uranium concentrations in leachate generated by Synthetic Precipitation Leaching Procedure (SPLP) tests conducted on Run of Mine ore and "Clean Sand" in order "to compare and evaluate potential leachate concentrations from pre AMT ROM versus post AMT waste." The results shows:

- the leachate from run of mine ore contained 0.217 mg/l uranium – more than 7 times CO uranium MCL of 0.30 mg/l and
- the leachate from the "clean sands" contained 0.0399 mg/l uranium – 33% higher than the Colorado uranium MCL. [Note: statement includes the only comparison of AMT waters or leachate to the Colorado MCLs cited in this review.]

These water quality analyses and SPLP test results demonstrate that the AMT ores and waste liquids contain radioactive constituents in hazardous concentrations – with hazardous concentrations being understood as concentrations that exceed health-based standards.

No data on heavy metals in AMT water or leachate is mentioned in the text of BRM 2.4 however data for metals is included in laboratory data sheets reporting analyses of the "October Post Ab", "October Post Screen" and SPLP leachate tests in the BRM 2.4 Appendices.

The BRM 2.4 lab sheets show that arsenic in AMT water and leachate samples at levels that exceed the Colorado MCL for that inorganic constituent, found at CCR 11.19(2) Table 11.19-1.

The "October Post Ab" and "October Post Screen" water was found, in data from two analyses reported at BRM 2.4 P. 29(/42) and 30, to contain:

- 0.677 mg/l Arsenic – 67 times the CO arsenic MCL of 0.010 mg/l and
- 0.862 mg/l – more than 86 times the CO arsenic MCL.

The "October Post Screen" water was found, in data from two analyses reported by BRM 2.4 at P. 33 and 34, to contain:

- 0.862 mg/ – more than 86 times the CO arsenic MCL and
- 2.79 mg/l – 279 times the CO arsenic MCL.

Significantly, arsenic content exceeding the CO MCL was also identified in the SPLP leachate from both run of mine ore and "clean sands" in lab data sheets, but ignored in the text. BRM 2.4 – P. 36 shows SPLP leachate from run of mine ore contain:

- arsenic content of 0.790 mg/l – 79 times the CO arsenic MCL.

BRM 2.4 P. 37 shows SPLP leachate from "clean sands" contain

- arsenic content of 0.064 mg/l – 6.4 times the CO arsenic MCL.

Though the sample is named "clean sands" in the BRM 2.4 data sheets, a sample generating SPLP leachate exceeding MCLs for arsenic and uranium cannot be considered "clean" in the plain language sense of the term.

These comparisons demonstrate the AMT process and wastewater streams identified by BRM and filed with CDPHE contain radioactive and hazardous constituents in hazardous concentrations. The radioactive and hazardous materials content of the liquids and solids generated by the AMT process provide a basis for the requirement for thoroughly detailed and financially guaranteed treatment and waste disposal practices to prevent exposure to the hazards in the AMT liquid wastes, as is the case with other source material milling licensees.

This review addresses the data provided by BRM to CDPHE. It is important to note that BRM 2.4 recognizes the findings reported are not a worst case scenario for contaminant concentrations in wastewater, as at P. 6 it notes that:

"It is conceivable that AMT wastewater could reach concentrations greater than five times that of the October Post Ab sample (Table 1)".

G) BRM test data do not reflect results from AMT processing of Sunday Mine complex ores

BRM's test data and AMT process and processed materials presented in its CDPHE filings are compiled from tests of "Hansen" and "October" uranium ores at a Wyoming site. These tests are summarized in Scriven 2013 – "Abalation: Breakthrough Technology to Reduce Uranium Mining Costs," IAEA 2013, a presentation in "International Symposium on Uranium Raw Material for the Nuclear Fuel Cycle", 23-27 June 2014, Vienna, Austria, David Scriven, P.E., Ablation Technologies, LLC. available at:
http://www-pub.iaea.org/iaeameetings/cn216pn/Thursday/Session11/105-Scriven.pdf

BRM 1.1 Table 1 shows an anticipated uranium content of 0.25%, equivalent to 2500 ppm, for Sunday Mine complex ores projected for AMT processing. In contrast, the uranium ore grade of the run of mine ore used in the tests described in BRM 2.4 at P. 25 is 1350 ppm, equivalent to 0.135% uranium, slightly more than half – 54% – of the uranium content of the ore anticipated for AMT processing in BRM 1.1 among other BRM sources.

The "October" ore was also much lower in vanadium content that the Sunday Mine ore vanadium content identified in BRM 1.1 and other filings. BRM 2.4 at P. 25 shows a vanadium content in "October" run of mine ore of 2520 ppm, only two times the uranium content of the "October" ore. The 1.8:1 ratio of vanadium versus uranium is a much lower than the 4:1 – 10:1 vanadium to uranium ratio asserted in BRM WP at P.8.

BRM 2.4 notes that additional studies using the ore proposed for processing are necessary and that BRM data in BRM 2.4 and other reports cannot be considered representative of results from similar tests using Sunday Mine ores.

After acknowledging that, "It is conceivable that AMT wastewater could reach concentrations greater than five times that of the October Post Ab sample (Table 1)", BRM 2.4 P. 6 concludes,

"Because of the complex hydrochemistry relationships involved, estimating the final concentration of uranium in the AMT system water before treatment or disposal cannot be done without further AMT trials and associated research."

BRM 2.4 at P. 7 notes,

"To more completely understand and approximate uranium concentrations in the AMT water, the mineralogy of the Sunday Mine Complex ore and the geochemistry of AMT water needs to be studied. Physical experiments and potentially a geochemical model could then be applied to approximate uranium solubility limits."

Certainly such tests should be conducted on the material proposed for mining and processing at a specific AMT facility as test results from dissimilar ores are not likely to provide results that would address the performance and chemistry of Sunday Mine ore that BRM has proposed to process using AMT.

III. Conclusion

This Review shows that Black Range Minerals' Ablation Mining Technology as described in BRM filings to CDPHE takes place in a "facility" (as defined in CRR 18. 2) where "source material" (defined in CRR 18.2 as uranium ore with more than 0.05% – 500 ppm – uranium) is subject to "processing" (as defined in CRR 18.2 including crushing, mixing with water, high-energy impacts, sand filtration, filter presses and centrifuges). Therefore BRM's planned use of AMT at the Sunday Mine complex should be subject to licensing as a source material milling facility under Colorado Radiation Regulations.

The AMT process generates a concentrated uranium "product" with a uranium content increased to about 10 times the uranium content in the ore.

The AMT process also generates liquid and solid "by-products material" – as defined in CRR 18.2 – as wastes resulting from the AMT processes that concentrate uranium.

The AMT "by-product material" as described by BRM tests contains uranium, radium and arsenic among other hazardous constituents in concentrations that exceed Colorado maximum contaminant levels for those constituents. The AMT process liquid and solid waste are "by-product materials" resulting from "concentration of uranium or thorium from any ore processed primarily for its source material content," since uranium is the only mineral identified in the ore being considered for the AMT process because current uranium prices are approximately 10 times current vanadium oxide prices.

The location or locations where BRM AMT processing of uranium is proposed will be considered a CRR 18.2 "facility", or facilities, as such locations will be a "the physical location at one site or address and under the same administrative control at which: (1) the possession, use, processing or storage of uranium-bearing and thorium-bearing radioactive material is or was authorized by license pursuant to this part; or (2) uranium and thorium is milled, or otherwise processed and the resulting byproduct material is dispositioned."

BRM's AMT project proposes to possess, use and store uranium-bearing radioactive material and use the AMT process to concentrate uranium in a low-volume product and a larger volume of by-product material.

A CRR 18.2 "facility" is a location where uranium is "milled or otherwise processed," allowing for inclusion of uranium processing outside the scope of conventional milling, such as AMT.

As Noted in Wang 2016 and BRM 2.4, BRM has not decided among the options it has identified for "dispositioning" of the liquid and solid "by-product material" that is generated by AMT.

This Review demonstrates that BRM's AMT process, as described so far, should be regulated by Colorado Radiation Regulations applicable to "source material milling licenses" which address the production of concentrated uranium products and liquid and solid "by-product materials," based on a plan language reading of the regulations.

IV. Brief Biographical Sketch

William "Paul" Robinson
Research Director
Southwest Research and Information Center
PO Box 4524
Albuquerque, NM 87196 USA
www.sric.org
Email – sricpaul@earthlink.net
Phone – 505-262-1862/Fax – 505-262-1862

William "Paul" Robinson is employed as Research Director at Southwest Research and Information Center in Albuquerque, New Mexico, a scientific and educational organization working to promote the health of people and communities, protect natural resources, ensure citizen participation, and secure environmental and social justice now and for future generations, where he has worked since 1976.

Paul has prepared peer reviewed technical papers, contract publications, and educational materials and provided expert technical testimony related to uranium mines, mills and uranium policy throughout his 35-year career. His consulting clients have included local and international non-governmental organizations, law firms, industry trade associations, project developers, and government regulatory and foreign assistance agencies.

Paul earned his Masters in Community and Regional Planning with an emphasis on Natural Resource Management from University of New Mexico (UNM) in Albuquerque in 1992 and a BA from the Technology Assessment Program at Washington University, St. Louis, MO in 1974. The professional project for this Masters addressed "Planning for Reclamation of the Uranium Waste Sites in the Former East Germany." Paul developed and taught Environmental Assessment Methods and Environmental Policy courses at the undergraduate and graduate level at UNM between 1983 and 2000 and developed and taught a course on Sacred Site and Environmental Protection on Native American Lands in the Native American Studies Program at UNM.

Paul's peer reviewed professional papers are included in publications of the British Columbia Chamber of Mines, New Mexico Bureau of Mining and Mineral Resources, Colorado School of Mines, Freiberg Technical Institute–Germany and European Union – Science and Technology Directorate.

Paul has served as a technical expert in regulatory proceedings periodically since 1979 including proceedings for uranium facilities such as White Mesa uranium mill in UT; Crow Butte in situ uranium mine in NE; Pitch Project in CO; Homestake-Grants, Bokum-Marquez, and Gulf-Mt. Taylor uranium mills in NM, Mt. Taylor uranium mine, NM and Vane Minerals Exploration Plan in Arizona in the US, the Elliot Lake uranium mill tailings and mine waste decommissioning in Canada and the adoption of regulations concerning mine operations and mine reclamation, pursuant to the Mew Mexico Mining Act, among other uranium and non-uranium mines.

A full resume is available on request.

V. References

Black Range Minerals (BRM) Colorado Department of Public Health and the Environment (CDPHE) documents referred to in this Review are available at the "CDPHE Ablation Process – Black Range Minerals" webpage at:
https://www.colorado.gov/pacific/cdphe/ablation-process-black-range-minerals
These sources include:

"BRM WP" Black Range Minerals Ablation Mining Technology White Paper- July 2015

"BRM 1.1" Black Range Response to Information Questions – April 2016 –Attachment 1.1 – Ablation Process Worker Exposure and Dose Assessment

"BRM 2.3" Black Range Response to Information Questions – April 2016 – Attachment 2.3 – Detailed Description of the AMT Processes

"BRM 2.4" Black Range Response to Information Questions – April 2016 – Attachment 2.4 – Water in the AMT Operation

"CDPHE Slides" CDPHE, "Ablation Technology Regulatory Process", undated, at https://www.colorado.gov/pacific/sites/default/files/HM_rad-ablation-reg-process-ppt2.pdf

Wang 2016 Wang, Shiya, "Additional information from Black Range Minerals", May 10, 2016 available at CDPHE Ablation Process webpage https://www.colorado.gov/pacific/cdphe/ablation-process-black-range-minerals

Other References:

Colorado Radiation Protection Regulations (6 CCR 1007-1 Parts 1 -18) at https://www.colorado.gov/pacific/cdphe/radregs

Colorado Primary Drinking Water Regulations (5 CCR 1002-11) at https://www.colorado.gov/pacific/sites/default/files/11_2015%2805%29.pdf

11.19(2) – Inorganic Chemicals Rule – MCL Requirements for Inorganic Chemicals

11.22(2) – Radionuclides Rule – MCL Requirements for Radionuclides

EPA 2008 USEPA, "Technical Report on Technologically Enhanced Naturally Occurring Radioactive Materials from Uranium Mining Volume 1: Mining and Reclamation Background", GPO, Washington, DC, 2008 revision at https://www.epa.gov/sites/production/files/2015-05/documents/402-r-08-005-v1.pdf.

New Mexico Tech "Uranium — *Where Is It Found?*", revised May 16, 2016, at https://geoinfo.nmt.edu/resources/uranium/where.html

Sigma-Aldrich "Particle Size Conversion Table," undated available at: http://www.sigmaaldrich.com/chemistry/stockroom-reagents/learning-center/technical-library/particle-size-conversion.html

Scriven 2014 Scriven, D. "Abalation: Breakthrough Technology to Reduce Uranium Mining Costs," in "International Symposium on Uranium Raw Material for the Nuclear Fuel Cycle", 23-27 June 2014, Vienna, Austria, David Scriven, P.E., Ablation Technologies, LLC. available at: http://www-pub.iaea.org/iaeameetings/cn216pn/Thursday/Session11/105-Scriven.pdf

Trade Tech 2016 Trade Tech, "Weekly U3O8 Spot Price Indicator" at www.uranium.info, site visited July 11, 2016.

USGS 2016 "April 2016 Mineral industry Survey for Vanadium", available at http://minerals.usgs.gov/minerals/pubs/commodity/vanadium/index.html#mis.

USGS 2000 Attachment 2 to this Review - "Figure 9", Correlation Chart for size classification systems in "USGS East-Coast Sediment Analysis: Procedures, Database and Georeferenced Displays, USGS OFR 00-358 at http://pubs.usgs.gov/of/2000/of00-358/graphics/chapter1/c1f9chrt.gif

Comparison of particle size fractions and uranium content of BRM "Results compared to Original ROM Mass" (Wang 2016 Table 1) with uranium mill tailings (UMT)"

Particle size distribution for BRM and UMT by mesh (sieve size) and grain size (1 micron = 1 millionth of a meter = 1um = 0.01 mm) -			UMT characteristic uranium content (ppm) of "sands" or "slimes" (EPA 2008)	U (ppm) in waste rock from AMT	mass (g or mass (%) mL)		U (ppm)	U (g)	U mass (%)
Sieve sizes for ROM (run of mine) - "Sieve Size"	Particle sizes associated	UMT Particle sizes							
		"Sands" - (75 - 500 um)		1350	21772.4	100.00%	1350	29.39	
+50/60	>250 um (greater than 250	"Sands" - (75 - 500 um)	40 - 100 ppm (0.004 -	214	2344.2	10.77%	214	0.5	1.71%
-50-60/+100	150 - 250 um	"Sands" - (75 - 500 um)	40 - 100 ppm (0.004 - 0.01%)	80	10800	49.60%	80	0.86	2.94%
-100/+200	75 - 150 um	"Sands" - (75 - 500 um)	40 - 100 ppm (0.004 - 0.01%)	157	2016	9.26%	157	0.32	1.08%
-200/+270	54 - 75 um	"Slimes" (45 - 75 um)	"about twice concentration in sands"	321	518.8	2.38%	321	0.17	0.57%
-270/+325	45 - 53 um	"Slimes" (45 - 75 um)	"about twice concentration in sands"	417	268.6	1.23%	417	0.11	0.38%
-325/+400	37 - 44 um				156.5	0.72%	454	0.07	0.24%
-400	less than 37 um				4001.77	18.38%	4590	18.37	62.49%
Solids recovered					20105.87	92.35%		20.4	69.40%
post ab water (mL)					350000		8.31	2.91	9.90%
total								23.31	79.30%

"+" before sieve mesh means the particles retained by the sieve; "-" before sieve mesh means particles that pass through the sieve;

Sources: Sigma-Aldrich, "Particle Size Conversion Chart"

Wang 2016 - Table 1 "details the mass and uranium contents in the pre-AMT ROM, post-AMT waste sands (with different screening sizes), and post-AMT ores (with screening size of -400):"

EPA 2008 - Table 3.13 - "Typical Characteristics of Uranium Mill Tailings" in "Technical Report on TENORM Volume 1: Mining and Reclamation Background", 2008 revision at https://www.epa.gov/sites/production/files/2015-05/documents/402-r-08-005-v1.pdf

Attachment 1

Attachment 2 – Particle Size Comparison Table
Source: http://pubs.usgs.gov/of/2000/of00-358/graphics/chapter1/c1f9chrt.gif

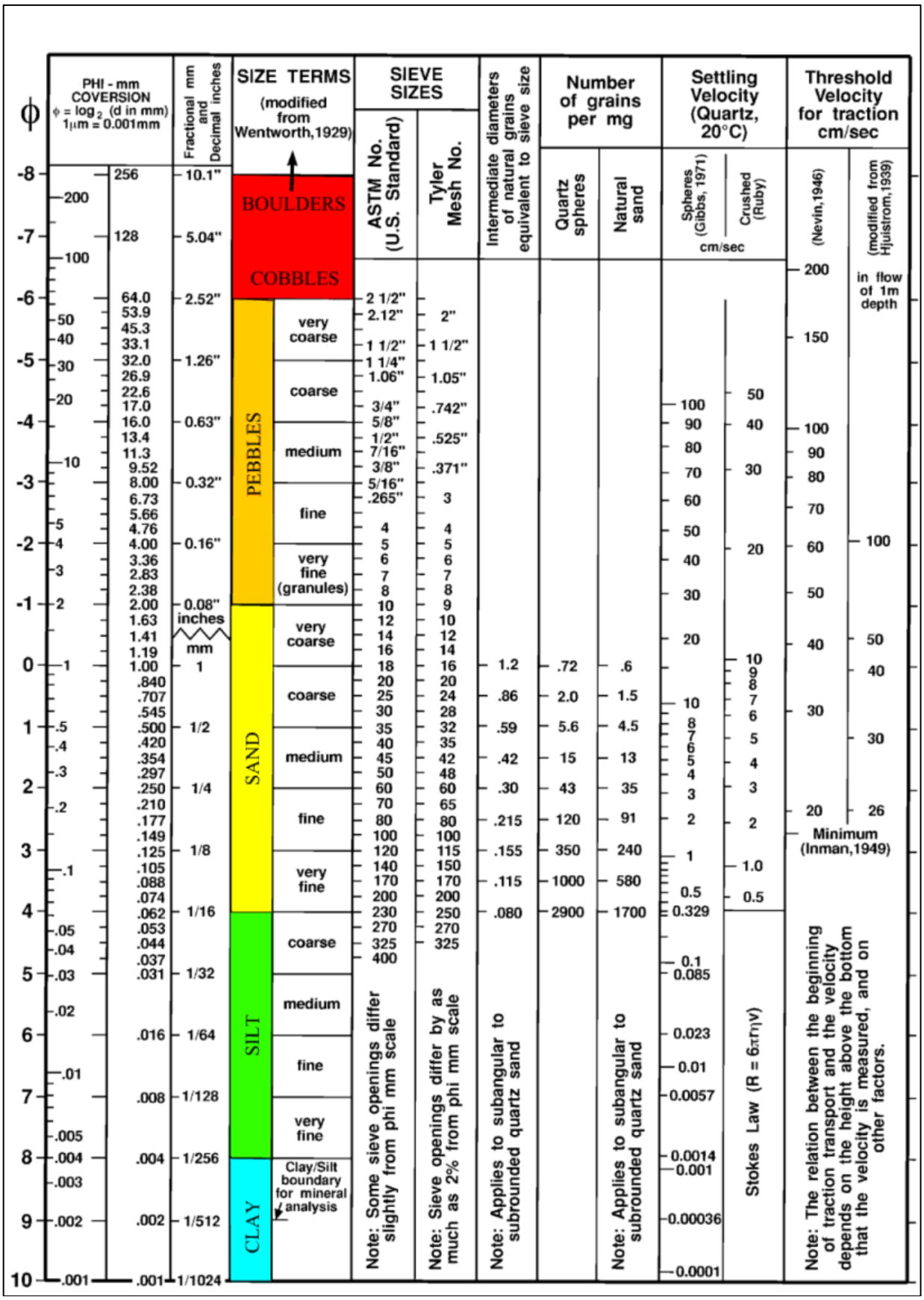

July 22, 2016

Jennifer Opila

Program Manager

Colorado Department of Public Health and Environment

4300 Cherry Creek South Drive

Denver, CO 80260

Ablation Technology Licensing Decision comment

Dear Ms. Opila,

When we acknowledge Western Colorado's long legacy of disproportional, negative uranium waste impacts, we understand the importance of carefully examining Black Range Minerals Ablation Technology application, and establishing a regulatory framework for this and all future projects utilizing this new technology under the Colorado Radiation Control Act 6 CCR 1007-1 Part 18.

Preceding any further regulatory analysis some requirements are necessary. The present BRM application has omissions of detailed information, a disregard for occupational, community and environmental health risks and a blatant attempt to escape any form of regulation. These factors would require Black Range Minerals to provide;

- a more detailed ablation process description and building details [including radiation controls].

- a precise plan of how liquid and solid wastes will be handled and disposed is imperative in 2016 ! [Characterizing radioactive wastes, similar to uranium mill tailings, as "clean sands" is a cruel deception.]

- a Professional RISK analysis, using current data, for occupational, public and environmental risks.

- a clear financial assurance agreement.

I was in attendance when George Glazier presented an Ablation program to the Grand Junction Chamber of Commerce. He explained that this Ablation Process as a "**milling** process using the stockpiles of previously mined ores at the mine sites".

Compliance with Section 18 would continue to involve the public in this decision making process with full and meaningful participation in the review of materials and formal opportunities to comment. The price of uranium today is $26.80 per lb. ! There is no need to rush

these proceedings, which should be comprehensive for all ablation projects, not just site based for the Sunday Mines.

My whole life has been entwined and affected by the uranium industry, I was born and grew up in Grand Junction during the height of the uranium boom. I have lived in Grand Junction the bulk of my life and lived in Gunnison for over 30 years, both uranium mill towns. I have three serious "community" concerns about Black Range Minerals application and presentation.

Socioeconomic - Since 2007 our regional community has experienced a string of George Glaziers' uranium projects on the Uravan Mineral Belt. The Whirlwind mine, the Pinon Ridge Uranium mill and now this Ablation process. It's going on 10 years that the Nucla, Naturita Norwood communities have heard the hype and promises about these projects and their spirits have soared and sunk with their failures.. Through each of these projects there were attempts to manipulate regulations but this current application shocked me in its attempt to circumvent proper, or ANY, radioactive regulation. The stigma and reality of radioactive wastes or the potential of the potential revival of uranium mining or processing have certainly affected property prices, and the business and natural capital in these extremely economically depressed communities. These communities deserve protection from fly by night speculations. I would urge the Radiation Division to hold Black Range Minerals to the highest standards of disclosure, planning, regulatory requirements and financial assurances.

Radioactive Wastes - The Ablation Mining Technical Review by Paul Robinson of the Southwest Research and Information Center states that the "Ablation process concentrates uranium and leaves a residue with radioactive content similar to uranium mill tailings". The lack of attention to the waste handling and disposal of the Ablation process, and the pretense of the "clean sands" name absolutely dishonors the many lives lost and compromised by continued exposure to low level radioactive wastes. It also disregards the serious work of the UMTRA, Legacy Management and CDPHE programs. Oh, how we would have lived a different life and had a different future had the uranium tailings been regulated ! At this point in our evolution, no radioactive substance should go unregulated.

Health Risks - *Radioactive contamination lies not only in the soils and waters of the uranium mine and mill sites but in the bodies of the workers and folks in the surrounding communities.*

The U.S. Environmental Protection Agency states, "There is no firm basis for setting a "safe" level of exposure above background for stochastic effects. In setting limits, EPA makes the cautious assumption that any increase in radiation exposure is accompanied by an increased risk of stochastic effects. How do we know radiation causes cancer? Basically, we have learned from observation ...as exposures to radioactive materials increased reports of illnesses became more frequent and scientists began to notice patterns in the illnesses and deaths. This lead to more scientific studies:

In 1982 Edward P. Radford, Physician and Epidemiologist stated..."the evidence on radiation producing cancer is beyond a doubt. I've worked fifteen years on it and so have many others. It is not a question anymore: radiation produces cancer, and the evidence is good all the way down to the lowest doses."

Dr. Karl Morgan, father of Health Physics and Director of Health Physics at Oak Ridge for 29 years, in 1978, "There is no safe level of radiation exposure. There is no such thing as a "permissible" dose of radiation...in a susceptible human the slightest quantity cam be enough to cause cancer. So the question is not: What is a safe level? The question is: How great is the risk"?

The U.S. National Academy of Sciences BEIR VII report concluded, no dose of radiation is safe, however small, including background radiation; exposure is cumulative and adds to an individuals' risk of developing cancer.

National Academy of Scientists - "There are no safe doses of radiation. Decades of research show clearly that any dose of radiation increases an individuals' risk for the development of cancer".

We are practical folks in our region and the patterns of illnesses and deaths are all too apparent in our regional community. Many news articles and books document uranium mining and milling sites that have been deeply affected. The health agencies that work to help uranium workers attest to the ongoing problem. Our hospitals and doctors know all too well the plight of uranium affected communities.

We understand epidemiological studies can never prove causation, but the higher the correlation the more certain the association. Epidemiological evidence can only help us assess the risk factors of exposure.

My understanding of Dr. Steven Brown's role in these applications should be one of providing hard data to assess the risk factors for various roles in a radioactive project. He testified in Nucla for the Pinon Ridge project that "no one had ever died or gotten sick from uranium...either in Monticello or Grand Junction". He was splitting epidemiological hairs with the folks who would be most directly affected by the mill. Energy Fuels apologized at the next comment session for his remarks. We heard about "riding in an airplane' compared to the Pinon Ridge mill from George Glasiers presentation in Montrose and a few weeks ago we hear from Dr. Brown about riding in a car along I-70 as compared to the risk factor of the Ablation process. I'm very over hearing this subterfuge about the safety of uranium, collateral damage is unacceptable. The Black Range Minerals application should contain hard data concerning the risk factors to the workers, community and environment.

I sincerely respect this opportunity to comment and look forward to continuing this project,

Janet Johnson

2037 Wrangler Court Grand Junction, CO 81507

* You may post these comments on the public site

Center for Biological Diversity • Citizens for Clean Air • Colorado Citizens Against ToxicWaste, Inc. • Coloradoans Against Resource Destruction • Earthworks • Ecoflight • Grand Valley Peace & Justice • Great Old Broads for Wilderness • Information Network for Responsible Mining • Living Rivers • Nuclear Information & Resource Service • Sheep Mountain Alliance • Sierra Club Rocky Mountain Chapter • Tallahassee Area Community, Inc. • Uranium Watch

July 22, 2016

Ms. Jennifer Opila
Radiation Program Manager
Colorado Department of Public Health and Environment
4300 Cherry Creek Drive South
Denver, CO 80260
jennifer.opila@state.co.us

Re: CDPHE Ablation Stakeholders Review

Dear Ms. Opila,

We appreciate the Colorado Department of Public Health and Environment's review of the application of regulations to ablation processing technology and the opportunity to submit comments for your consideration. Collectively, our organizations represent tens of thousands of people in Colorado and other states who are concerned with the environmental and public health impacts of uranium extraction, processing and waste disposal. We also value the importance of protecting clean water supplies, appropriate management of our ecosystems and watersheds, and fair and appropriate regulations to protect public health and the environment.

We are concerned about the use of the untested ablation technology at uranium mines without a stringent review process and appropriate regulations for the handling of the specific waste byproducts that would be generated. Our review of the ablation technology proposal submitted to the Colorado Department of Public Health and Environment concludes that the ablation technology is a type of concentration of uranium that generates radioactive byproducts requiring a specific source material milling license and public review process. We believe that the most appropriate licensing process for ablation falls under the Colorado Radiation Control Act, 6 CCR 1007-1, Part 18, Section 18.3. These regulations provide important safeguards to ensure that radioactive byproduct wastes generated by the ablation process are appropriately managed and disposed with sufficient protections for public health and the environment. Before licensing any proposed ablation facility, proponents should be required to fully vet the technology and provide scientifically sound data and information that is complete and verifiable in order to prove that ablation can be safely deployed and that communities and the environment can be protected.

The Part 18 Section 18.3 specific source material licensing process provides important guarantees to the public that allow for full and meaningful participation in the

decision-making process over uranium facilities. These include the right of citizens to review application materials, the right to comment at a public meeting and in writing, and the right to request a formal hearing where evidence is presented for cross-examination. Under the Part 18 Section 18.3 regulations the state also conducts an independent review of the environmental impacts of licensed facilities and provides an opportunity for participation from county governments, which also benefit public participation and informed decision-making. These principles are critical to preserve in any state decision-making process regarding facilities that concentrate uranium and produce byproduct wastes.

In licensing facilities that utilize the ablation process, the Department should, at minimum, require the following elements in a complete application in order to allow for a full scientific review:

- An environmental assessment and public health assessment
- A detailed site description and description of proposed activities
- A hydrological analysis investigating potential water quality impacts and baseline water quality data
- A detailed description and discussion of how liquid and solid wastes will be handled and disposed
- A review of occupational health impacts
- A safety and emergency plan to address spills and incidents
- An analysis of traffic and transportation impacts
- An analysis of the release of radionuclides and radon emissions
- Demonstration of water rights

In determining that Part 18 regulations are required for the ablation process, the Department will set an important precedent that protects the values that are supported by Colorado's Agreement State status wherein the public is provided a meaningful and expansive opportunity to participate in decision-making; that the regulations are carefully crafted to ensure public health, the environment and water quality are protected; and that financial sureties and long-term monitoring costs are guaranteed to protect future liabilities from falling on the public. As an emerging technology, ablation could be proposed at additional sites in the future, in Colorado or elsewhere, and because it has never been deployed commercially the final outcomes of how it will truly work remain unknown. It is critical that future decisions regarding ablation be the wisest possible and require the strongest protections possible.

Colorado has more than 3,000 inactive uranium mines and the history of uranium mining and milling has left an everlasting reminder of the dangers of reckless management of radioactive materials and waste. The San Miguel-Dolores watershed is the most highly concentrated area of uranium mines in the nation; approximately 1,200 uranium mines straddle the two rivers as they wind through Colorado's canyon country. The environmental legacy of the Cold War has never been completely cleaned up, yet regionally and statewide a new era of thoughtful planning and conservation management have taken hold. Significant conservation efforts have developed over the years to protect the Dolores River canyon itself. In 2016, the Department provided nonpoint source grant funding to remediate historic uranium waste piles at the Centennial and Suncup mines, which are now proposed as potential sites for new uranium extraction and ablation processing. Colorado has gone through significant efforts to develop a statewide water plan in order to better and more sustainably manage water supplies. It is

imperative that the mistakes of the past not be repeated and that the lessons learned of the great need to protect workers and communities from the harmful exposures of radioactive wastes be remembered. The Department's existing laws and regulations under Part 18 are the means that allow us to do exactly that.

We appreciate the opportunity to provide our concerns on this question and look forward to engaging on these important issues in the future. Please make these comments publicly available on your website. Thank you again for your consideration.

Respectfully submitted,

Center for Biological Diversity
Randi Spivak, Director Public Lands Program
1411 K Street NW, Suite 1300, Washington, D.C. 20006
www.biologicaldiversity.org

Citizens for Clean Air
Karen Sjoberg, Chairperson
P.O. Box 101, Grand Junction, CO 81502
citizensforcleanairgj@gmail.com

Colorado Citizens Against ToxicWaste, Inc. (CCAT)
Sharyn Cunningham, Co-Chair
P.O. Box 964, Cañon City, CO 81215
sharyn@bresnan.net

Coloradoans Against Resource Destruction (CARD)
James Woodward, Coordinating Committee Member
P.O. Box 599, Wellington, CO 80549
jbw@frii.com

Earthworks
Aaron Mintzes, Policy Advocate
1612 K Street, NW, Suite 808, Washington, D.C. 20006
amintzes@earthworksaction.org

Ecoflight
Bruce Gordon, President
307 L AABC, Aspen, CO 81611
www.ecoflight.org

Grand Valley Peace & Justice
Julie Mamo, Executive Director
740 Gunnison Avenue, Grand Junction, CO 81501
director@gvpeacejustice.org

Great Old Broads for Wilderness
Shelley Silbert, Executive Director
P.O. Box 2924, Durango, CO 81302
www.greatoldbroads.org

Information Network for Responsible Mining
Jennifer Thurston, Director
P.O. Box 27, Norwood, CO 81423
jennifer@informcolorado.org

Living Rivers
John Weisheit, Conservation Director
P.O. Box 466, Moab, UT 84532
john@livingrivers.org

Nuclear Information & Resource Service
Timothy Judson, Executive Director
6930 Carroll Avenue, Suite 340, Takoma Park, MD 20912
www.nirs.org

Sheep Mountain Alliance
Karen Tuddenham, Executive Director
P.O. Box 389, Telluride, CO 81435
www.sheepmountainalliance.org

Sierra Club Rocky Mountain Chapter
Joan Seeman, Toxic Issues Chair
1536 Wynkoop Street, Suite 200, Denver, CO 80202
www.sierraclub.org/rocky-mountain-chapter

Tallahassee Area Community, Inc.
Cathe Meyrick, President
1739 County Rd 21A, Cañon City, CO 81212
cmmeyrick@aol.com

Uranium Watch
Sarah Fields, Director
P.O. Box 344, Moab, UT 84532
sarah@uraniumwatch.org

Cc: Dr. Larry Wolk, Colorado Department of Public Health and Environment
Ms. Ginny Brannon, Colorado Department of Reclamation, Mining and Safety
Mr. Stephen Poy, Nuclear Regulatory Commission

July 22, 2016

Ms. Jennifer Opila
Colorado Department of Public Health & Environment
Hazardous Materials and Waste Management Division
4300 Cherry Creek Drive S.
Denver, CO 80246-1530

Re: Final Submittals; AMT Stakeholder Review Period

Dear Ms. Opila,

On behalf of Black Range Minerals, I present to you final submittals to the Colorado Department of Public Health and Environment, Hazardous Materials and Waste Management Division at closing of the Ablation Mining Technology stakeholder review period**.**

Included are six documents:

I. Specific Comments Prepared by Thompson and Pugsley, Attorneys at Law, on the White Paper from Tallahassee Area Community
II. Comments on CDPHE Alternative Licensing Options, Prepared by Thompson and Pugsley, Attorneys at Law
III. History of the US AEA and as amended by UMTRCA as Regards to the Development of NRC's and all Agreement State Regulatory Programs for "Source Material" and "Source Material Recovery", Prepared by Thompson and Pugsley, Attorneys at Law
IV. Additional Submission on the Fonner Memorandum and Lack of Need for Dual Regulation, Prepared by Thompson and Pugsley, Attorneys at Law
V. Response to Comment at June 1, 2016 Stakeholder Meeting in Naturita, CO on Compliance of the Sunday Mine Complex with USEPA NESHAPS During the Period 2008 – 2010
VI. Specific Comments Prepared by Western Water and Land on the White Paper from Tallahassee Area Community

Please feel free to contact me at (720) 258-6329 or psiglin@western-uranium.com if you have any questions or comments.

Sincerely,

Patrick C Siglin
Black Range Minerals
Vice President, Development

cc: Ms. Shiya Wang, Ph. D., Environmental Protection Specialist – CDPHE

I. Specific Comments Prepared by Thompson and Pugsley, Attorneys at Law, on the White Paper from Tallahassee Area Community

1. Page 4: The comparison of the use of ablation technology to in situ leach uranium recovery (ISR) is not appropriate. As NRC noted in their "milling underground decision," the determination that subsurface activities in an ISR wellfield is based on a chemical change to the uranium in the host ore body that is dissolved into solution and brought to the surface for removal in ion-exchange (IX) columns. In short, this continuous process represents what the AEA envisioned as processing of ores (in this case uranium-laden groundwater intentionally injected with a lixiviant) *primarily* for its source material content. In the case of ablation, the ore is not being processed primarily for its source material content, but rather to high-grade the ore prior to shipment to milling facility where it would be processed *primarily* for its source material content. Unlike what is stated on this page of the TAC White Paper, oxygen that is naturally occurring is present in all forms of mining activity involving the presence of groundwater or intentional introduction of water to remove ore from host rock for processing (e.g., borehole mining). Indeed, uranium deposited in areas around the country were placed there through migration of groundwater and deposition due to precipitation. In addition, the oxygen is not injected into the water used in the ablation process with the intent of solubilizing the uranium. If the TAC White Paper's theory were correct, all forms of mining could be classified as "milling" if water were present and oxygen happened to be introduced.

Further, NRC has previously issued licenses to companies that remove uranium from groundwater where oxygen is present naturally but did not require that the license be for "milling." In the example of Water Remediation Technology (WRT), the license was issued to the company with the intent of removing uranium from community or private water systems to comply with the Safe Drinking Water Act's (SDWA) then-new uranium in drinking water standard. As the definition of 11e.(2) byproduct material is "intent-based," the fact that the uranium as being removed from the groundwater *primarily* to comply with the SDWA uranium in drinking water standard, NRC determined that no "milling" license was required.

2. Page 5: The TAC White Paper alleges that any waste generated from the ablation process would have a detrimental effect on the environment. What the White Paper fails to mention is that the material generated from ablation that is not intended to be transported to a uranium mill for the generation of yellowcake is no different from overburden generated from other types of conventional mining; however, in the case of ablation, the material has almost the entirety of the uranium content removed meaning that the vast majority of its daughter products would be removed as well because the uranium remains in equilibrium in the post ablation ore. In any effect, standard State-based mining regulations typically address these issues in their safety and environmental reviews and mining operations are subject to strict regulation under federal and State authority. In addition, the economics of the use of ablation technology is of no concern to a regulatory agency. Thus, the concern raised in the TAC White Paper that the waste would have an adverse effect on the environment is unfounded.

3. Page 6: On this page, the TAC White Paper alleges not only that the use of ablation technology represents a "non-conventional uranium milling activity," but also that it is "a potentially useful first step in the multi-step ore processing procedure required to produce…yellowcake." This statement is absurd on its face because, by this theory, any mining activity could be classified as "milling" as removal of the uranium from host rock also could qualify as a useful first step in processing as it cannot be processed without removal from the host rock. Typical mining activities that would fit this description would be underground crushing, ore sorting and/or blending, and blasting, none of which are typically classified as an AEA-based activity, let alone "milling."

4. Pages 7-9: On these three pages, the TAC White Paper attempts to lay out a position that the "plain language" of HPPOS 184 demonstrates that the use of ablation technology is "milling." However, the White Paper fails to account for the fact that the plain language of federal legislation is not the only factor to be considered when evaluating whether jurisdiction attaches and in what way that jurisdiction is to be interpreted in the event it does attach. The White Paper does not even attempt to account for the legislative history of the AEA, as amended by UMTRCA, and what Congress' intent was when it created the definition of 11e.(2) byproduct material. To summarize, Congress intended that 11e.(2) byproduct material be consolidated at a limited amount of sites so that proliferation of such material is limited. For this reason, NRC's NUREG-0706 specifically interpreted UMTRCA to mean that material crossing the fence-line of a uranium mill, if converted into waste, would be defined as 11e.(2) byproduct material for purposes of disposal and long-term surveillance and monitoring. This interpretation even applies to uranium ore stored on an ore pad at a uranium mill that, in the event it is not processed, would convert into 11e.(2) byproduct material and could be disposed of in a mill tailings impoundment. Additionally, this interpretation applies to the mill facilities themselves in that, after final decommissioning, construction materials and other parts of the mill's facilities that cannot be decontamination for unrestricted release can be disposed of as 11e.(2) byproduct material in the site's mill tailings impoundments. Based on this, NRC typically has not assumed "milling" jurisdiction over mined ore that is not at the uranium mill facility. This is evidenced in the Fonner Memorandum noted in Black Range Minerals' White Paper submitted last year.

It is also important to note that the Fonner Memorandum discusses the fact that NRC would have AEA jurisdiction over unrefined and unprocessed ore but made the determination, pursuant to UMTRCA, that it was not necessary for NRC to exercise such jurisdiction. While the TAC White Paper argues that NRC and the State of Colorado are attempting to pursue "consistent" interpretations of its laws, it ignores the fact that NRC has consistently interpreted activities occurring at mining sites that are analogous to ablation as "mining." At the very least, even if the words of the Fonner Memorandum are taken to mean that there is AEA jurisdiction that would attach, it would result in the need for a specific source material license and not a source and 11e.(2) byproduct material or "milling" license. As stated previously, NRC has licensed facilities in the past that do generate licensable source material but do not generate

11e.(2) byproduct material. Thus, because NRC regulations at 10 CFR Part 40.4 specifically states that only "milling" can generate 11e.(2) byproduct material, then the use of ablation cannot generate 11e.(2) byproduct material.

5. Page 9-10: The use of the definition of "mining" to support the TAC White Paper's final conclusion actually defeats the premise that ablation is an activity other than mining. The definition offered states that "mining" is the extraction of valuable minerals from an orebody "which forms the mineralized package of economic interest to the miner." Ablation technology fits this definition in the same manner that ore sorting/blending or blasting does. Ablation is a form of sophisticated ore sorting that is designed to isolate the economically valuable portion of ore from host rock to minimize the amount of ore that does not contain uranium as well as minimizing the amount of waste material generated at a uranium mill when it is finally processed. Ore sorting and/or blending has occurred in many cases that was not interpreted to constitute an AEA activity or to generate AEA materials.

Indeed, the TAC White Paper specifically references "split-shot" mining as a part of the "mining" process. "Split-shot" mining is nothing more than a technique used to high-grade ore and to ensure that the economical portion of the ore taken from the host rock is gathered. This approach to mining is not different in concept from ore sorting or blending as this is only intended to high-grade the ore and ensure that there is a minimal amount of tailings generated from actual processing. The goal of these mining techniques, including ablation, is no different from past mining activities that NRC has not invoked AEA jurisdiction to for mining companies. Even if AEA jurisdiction were to be implicated here, there is no legislative or regulatory nexus between the use of ablation technology and the concept of source material "milling."

6. Page 11: The conclusion reached in the TAC White Paper that the letter from October 16, 2012 implies that the ablation process would result in the possession of source material is not adequate grounds to conclude that AEA jurisdiction attaches. In the context of "mining" and of possession of unrefined or unprocessed ore per 10 CFR Part 40.13, NRC does not exercise jurisdiction over the material from mining processes even if it meets the *licensable* source material content requirements promulgated pursuant to Section 62 of the AEA and 10 CFR Part 40.13, which is 500 ppm source material (uranium and/or thorium in any form). Unlike the comment by in the TAC White Paper that "it is a logical and reasonable interpretation…that it is the possession of ore with the immediate and imminent intent to process that is the point at which the ore becomes source material," NRC's actual regulatory stance on this has nothing to do with the possession of ore containing source material, because mining companies often possesses ores containing source material without the need for an AEA license. This statement in the TAC White Paper yet again ignores how NRC has carried out the mandate of Congress in the AEA and UMTRCA.

7. Page 11: The comment in the TAC White Paper that the threshold for an ore becoming source material when it is possessed and there is an immediate and imminent intent to process is misguided. There is no other reason to extract economically valuable minerals

such as uranium ore from host rock than if you have an intent to process them. The intent based portion of the definition of 11e.(2) byproduct material has absolutely nothing to do with possession of source material with an intent to process. Companies such as Western Uranium and Energy Fuels Resources own both current (or proposed) mine and mill facilities. Their mining facilities are designed to generate uranium-bearing ores from mining processes with the intent to process them *at the mill facility primarily for their source material content*. Yet, these mining facilities do not require an AEA license even though they may possess source material in ores that reach *licensable levels*. The reason for this is that NRC does not exert AEA jurisdiction over such ores at mining sites, which is detailed in NRC's Fonner Memorandum. It is also important to note that the technical and regulatory details associated with ablation were not yet properly presented before NRC or CDPHE and the processes used and the legislative/regulatory history of NRC regulation of source material mining were not yet presented. Thus, the content of the October 16, 2012 letter is based on speculation of what ablation *might* require in terms of licensing and not an interpretation of what it actually presents to a regulatory agency under the AEA or mining regulations. This is also true for the March 20, 2013, letter from NRC in which it speculates that a source material license would be required.

8. <u>Page 12:</u> The TAC White Paper again ignores past practices of NRC with respect to mining techniques. The Paper appears to assert that crushing and grinding of ore is, across the board, indication of an AEA process. This is not the case. Underground crushers and grizzlies at conventional uranium mines have been used in the past and they have not been subject to an AEA license. Even though a dictionary defines "processing" in a certain manner does not mean that Congress intended for NRC to have jurisdiction over certain activities. Further, the citation to 40 CFR Part 261.4(b)(7) to demonstrate that crushing and grinding of ore is "beneficiation" is irrelevant to this inquiry as these regulations are not Congressional or agency interpretation of the AEA or UMTRCA, but rather "beneficiation" is a Resource Conservation and Recovery Act (RCRA) definition.

9. <u>Page 13:</u> The TAC White Paper identified "gravity separation" as an AEA process. While it is possible that such a process may be reflective of an AEA process, it certainly is not a "milling" process. In the case of Heritage Minerals, Inc. (HMI), NRC addressed a facility in Lakehurst, New Jersey where monazite sands were generated as part of a side-stream process involving electrostatic and gravity separation. NRC determined that a source material, and not a source and 11e.(2) byproduct material or "milling," license was required. Even though this example would appear to indicate that such a license would be required in accordance with the NRC and CDPHE correspondence noted in the TAC White Paper, this is not necessarily the case. The HMI license only required that the portion of the Lakehurst site that included the "wet and dry mill" buildings where gravity separation occurred and the monazite sands itself were licensable. The remainder of the site, including any radioactive material, was only subject to State "mining" jurisdiction. The HMI example provides regulators with two (2) important perspectives: (a) even though HMI was concentrating a source material stream (monazite), it

was generated as a side-stream recovery process which NRC determined was not processing the ore *primarily* for its source material content and, thus, was not milling and (b) that the area where the monazite rich sands were mined for the gravity separation was not subject to AEA jurisdiction. But, while the HMI process was designed to concentrate a pure monazite (thorium source material) stream, ablation is not designed to do anything but high-grade ore during the mining process. To interpret otherwise would be to penalize a technology that is designed to be a more efficient version of mining with no associated increase in risk as has been demonstrated by the Black Range submittals in reponse to CDPHE's specific questions on worker and public risk.

10. Page 14: The TAC White Paper specifically notes that ore sorting and crushing or grinding of ore does not generate 11e.(2) byproduct material, as they do not generate waste. It is inaccurate to say these processes do not generate waste as ore sorting or crushing/grinding in an attempt to high-grade the ore will generate waste that is eventually treated as overburden and returned to the mine or another appropriate disposition option. If the crushing and/or grinding or sorting occurred at a mill facility, then it could be disposed of as 11e.(2) byproduct material due to NRC's interpretation in NUREG-0706. This also demonstrates that the White Paper's attempt to label ablation as "milling" is without merit, as the first several pages of the Paper label ablation as "source material processing." The lack of consistency in these arguments show that they have no merit.

11. Page 14: After making inconsistent comments regarding whether ablation is "source material processing" warranting a source material license or "milling" requiring a source and 11e.(2) byproduct material license, the White Paper then claims that ablation generates waste and, thus, meets the definition of "milling." This is without merit, as mining generates waste in the form of overburden that eventually would refill an open pit or be disposed in an appropriate fashion pursuant to e.g., State miningnpermit requirements. If the generation of waste is a threshold requirement for "milling," then all mining activity would be classified as "milling."

12. Page 14: The White Paper states that "[t]he fact that the uranium compound found in ablation wastes is unchanged from the original ore rather than chemically converted U3O8 is not significant with respect to the definition of byproduct material." This statement offers no statutory or regulatory authority to support this conclusion. Further, the fact that there is no chemical change is significant to the definition of 11e.(2) byproduct material in accord with the White Paper's statement that ablation resembles an ISR facility. NRC determined that subsurface activities were "milling underground" because there was a chemical change to the uranium to dissolve it into solution. This renders the White Paper's conclusion internally inconsistent.

The same is true for the recovered process water from ablation. The White Paper alleges that the recovered water would meet the definition of 11e.(2) byproduct material in a manner similar to an ISR facility. This is inaccurate because, as previously stated, ablation is not

an ISR process. Also, treated process water, if re-used, is not a "waste" and therefore cannot be 11e.(2) byproduct material. Additionally, if the water is treated in accordance with appropriate regulatory standards and meets a particular "class-of-use" standard such as agricultural or industrial use, then the water cannot be a waste because it can be used for a specified purpose.

13. Page 15: The TAC White Paper tries to use NRC's determinations in the *Sequoyah Fuels* case to support its allegations that ablation is "milling." Specifically, the White Paper claims that NRC's conclusion that "milling" steps can occur at multiple locations shows that ablation can be classified as a milling process. However, the Paper's citation ignores the facts associated with this case. First, the *Sequoyah Fuels* site was a post-milling site location where generated yellowcake could be purified to remove any contaminants that may not have been removed during the milling process. This interpretation by NRC is distinguishable from the current inquiry as ablation takes place at the mining stage of the process and not post-milling. Secondly, the primary purpose of the *Sequoyah Fuels* process was to generate source material yellowcake while ablation is to high-grade ore. The *Sequoyah Fuels* example also does not comport with past NRC interpretations of what they regulate as part of the pre-milling process, as discussed in previous comments.

14. June 20, 2016 Letter: Western Uranium is aware of a letter sent by CDPHE to NRC requesting input on two issues. With respect to issues #1, 11e.(2) byproduct material is an intent-based definition. The type of waste material generated by "source material milling" and the facilities associated with such "milling" is classified as 11e.(2) byproduct material. NRC has determined that it has federal, exclusive, preemptive jurisdiction over the entirety of 11e.(2) byproduct material, including both the radiological and non-radiological (hazardous) components. However, a process that "concentrates" uranium is not necessarily a "milling" process and, thus, does not necessarily generate 11e.(2) byproduct material. In order for a process to be defined as "milling" and for the waste to be 11e.(2) byproduct material, it must be determined that the processing is being conducted *primarily* for its source material content. There are numerous examples of processes such as those licensed in the previously discussion examples of WRT and HMI where source material was concentrated but there was no intent to process ores *primarily* for their source material content. These licensees only required a source material license and did not require a license for the handling of 11e.(2) byproduct material. Thus, CDPHE must focus on the intent-based nature of the definition of 11e.(2) byproduct material.

Second, CDPHE is required to have regulations that are adequate under the AEA and compatible with NRC regulations. NRC has licensed companies in the past that generate source material that is deemed to be outside of a "mining" context. If this is the case, there is no reason that CDPHE should have to create a new regulatory regime for a specific source material license with appropriate license conditions.

II. Comments on CDPHE Alternative Licensing Options, Prepared by Thompson and Pugsley, Attorneys at Law

1. No Radioactive Materials License: This type of licensing approach indicates that the use of ablation technology on a site-specific basis is considered to be "mining" and is not within the purview of the federal Atomic Energy Act (AEA) and, hence, not within the jurisdiction of the Nuclear Regulatory Commission (NRC) or its Agreement States. This does not, however, remove jurisdictional authority from the State of Colorado; but rather, it places ablation technology within the jurisdiction of the State to regulate mining which Western Uranium believes is more than adequate to protect public health and safety and the environment.

2. General Radioactive Materials License for the Possession of Source Material Involved in Mining Operations:

This type of licensing approach is confusing as there is no AEA license required, either general or specific, for possession of source material from "mining" operations. If the operation is considered to be "mining," NRC does not have jurisdiction over the source material generated from such operations. This would fall under Section 62 of the AEA which states that NRC does not regulate source material until after removal from its place in nature. If the operation is considered to be "mining," this means that the source material in the ore produced from such operations is regulated under the State's mining authority. Thus, no AEA license would be required in this situation.

3. Specific Radioactive Materials License for Source Material:

This type of licensing approach again is confusing because a specific license for source material would be issued under the AEA and the State of Colorado's Agreement State authority. The State has no jurisdiction outside of the AEA to issue a license for source material as NRC preempts all State authority for the regulation of AEA materials, including but not limited to source material. If the intent of CDPHE in this category of licensing is to characterize this as a source material processing (but not source material milling) license, then that type of license could validly be issued under the State's Agreement State authority.

4. Part 18 Radioactive Materials License for Uranium Processing (Not Milling):

This type of licensing approach is a viable approach under the AEA. As can be shown by the regulations in Part 18 and corresponding regulations in NRC's 10 CFR Part 40 regulations, these *existing* regulations are more than sufficient to license the use of ablation technology, if the appropriate regulatory authorities determine that its use is source material processing. This potential approach negates the need for the licensing approach noted in Option #3 above.

5. Source Material Milling Radioactive Material License:

While this type of licensing approach is valid under the State's AEA Agreement State authority, this license category should not apply to the use of ablation technology. As stated in multiple places in these comments, the only activity that can generate 11e.(2) byproduct material is uranium milling. The AEA definition of 11e.(2) byproduct material is an intent-based definition that requires that the processing of ores *primarily* for their source material content occur in order to represent uranium milling. As stated in the legislative history of the Uranium Mill Tailings Radiation Control Act of 1978 (UMTRCA), Congress intended that 11e.(2) byproduct material be consolidated at mill sites so that such material can be properly managed for the statutory closure period of 200 years and, to the maximum extent practicable, 1,000 years. This Congressional intent is manifest in NRC's 10 CFR Part 40, Appendix A, Criterion 2 that has been incorporated by reference into the State's Agreement State regulatory program:

> "To avoid proliferation of small waste disposal sites and thereby reduce perpetual surveillance obligations, byproduct material from in situ extraction operations, such as residues from solution evaporation or contaminated control processes, and wastes from small remote above ground extraction operations must be disposed of at existing large mill tailings disposal sites; unless, considering the nature of the wastes, such as their volume and specific activity, and the costs and environmental impacts of transporting the wastes to a large disposal site, such offsite disposal is demonstrated to be impracticable or the advantages of onsite burial clearly outweigh the benefits of reducing the perpetual surveillance obligations."

While this applies to specific 11e.(2) such as ISR wastes, the focus of Congress' intent is clear that it wanted to avoid multiple 11e.(2) byproduct material disposal sites. For this reason, NRC has determined that its "source material milling" jurisdiction attaches to ores intended to be processed *primarily* for their source material content at the fence line of a uranium milling facility. This ensures that all wastes generated at the site may be consolidated in on-site mill tailings impoundments to minimize the locations where 11e.(2) byproduct material would be stored and managed.

Ablation technology is not intended to process ores primarily for their source material content; but rather, it is intended to selectively identify and create high-grade ores as that they may later be processed at a uranium mill *primarily* to recover their source material content. This scenario is no different from blasting, because uranium mining companies are interested in ensuring that ores have the highest concentration of uranium possible for economic purposes. During the use of ablation technology, there is no physical change to the uranium in these ores and no chemical change such as that used during ISR operations or during ion exchange or solvent extraction at a conventional uranium mill, which NRC has classified as "milling." Thus, Western Uranium believes that the use of ablation technology does not rise to the level of uranium milling and, thus, this class of license is not warranted for this technology.

6. <u>New Regulatory Category:</u> This proposed licensing approach is unnecessary for regulation of ablation technology, regardless of what determination is made by CDPHE and/or

NRC regarding whether AEA jurisdiction attaches. Western Uranium believes that ablation technology is a mining process and the existing State of Colorado regulations for mining adequately addresses potential health and safety risks associated with the use of ablation technology. In addition, in the event it is determined that the State's AEA Agreement State program has jurisdiction, the existing source material regulatory program adequately addresses what would be required to protect public health and safety and the environment. It is an unnecessary waste of State resources and time to try and "re-invent the wheel" where adequate regulations exist. As stated previously, NRC has demonstrated that source material possessors can be licensed under existing 10 CFR Part 40 regulations and compatible Agreement State regulations through license conditions and appropriate health and safety requirements. There is no reason for the State to create a completely different regulatory program for one technology that is nothing more than a sophisticated ore sorting technology that can be regulated from both a safety and environmental perspective. Further, to engage in an effort to create a new regulatory program for a technology that does not require one, the State would be imposing an unnecessary delay on Western Uranium's attempt to properly license its technology for specific sites. We believe that the efforts of various organizations to stonewall or inhibit Western Uranium's ability to license this technology, which would provide an environmentally protective approach to typical uranium mining, are reflective of the argument being raised that this technology is "source material milling." Western Uranium requires regulatory certainty on this issue and believes that the State should rule out the class of licensing of uranium milling for this technology and strictly limit the inquiry to whether AEA jurisdiction attaches for the purposes of possession of source material or whether State jurisdiction attaches for mining purposes.

III. History of the US AEA and as amended by UMTRCA as Regards to the Development of NRC's and all Agreement State Regulatory Programs for "Source Material" and "Source Material Recovery", Prepared by Thompson and Pugsley, Attorneys at Law

As is the case with the typical interpretations of the AEA and its amendments under UMTRCA, it is critical for regulators to know the history of the AEA and the development of a federal program for the regulation of the tailings or other wastes generated by the processing of ores *primarily* for their source material content or 11e.(2) byproduct material. Given that the TAC White Paper completely ignores the legislative history of these statutes and NRC's regulatory program, a brief summary of this history should be provided.

The AEA, as enacted in 1954 and amended by UMTRCA in 1978 provides the bases for the development of NRC's and all Agreement State regulatory programs for "source material" and "source material recovery." With respect to *source material*, Congress used the AEA to establish a system by which the identification, extraction, possession and transfer of uranium or thorium would be regulated using licenses containing specific license requirements or conditions. In Chapter 7 of the AEA, Congress created a program under which entities seeking to engage in the production of *source material* could be required to obtain licenses from the Atomic Energy Commission (AEC now NRC) so that such *source material* could be used for a variety of purposes such as research and development and the creation of special nuclear material.[1] It is extremely important to note that, under the AEA's statutory framework, NRC now is solely an *independent* regulatory agency and, as such, "has no authority to encourage and promote the development of atomic energy for peaceful purposes. Nor does it bear any responsibility for the development or regulation of other energy sources."[2] Thus, a private entity (e.g., source material recovery company) or governmental entity (e.g., United States Department of the Army) is required to voluntarily submit license or license amendment applications to the Commission in order to possess, use, and transfer AEA materials to which NRC reacts.[3] "[T]he Commission has no power to compel an applicant to come forward or to require an applicant, once having come forward, to prepare and submit a totally different proposal."[4] When reviewing a license or license amendment application, "the available alternatives [to NRC] are to grant the application, grant the application subject to certain conditions, or deny the application, either with or without prejudice."[5] Thus, under this scheme, the licensee, and not the Commission, is *primarily* responsible for the safe management of AEA materials.

---

[1] 42 U.S.C. § 2093(a)(1-4) (hereinafter "Exhibit 5").
[2] 49 Fed. Reg. 9352, 9353 (March 12, 1984) (hereinafter "Exhibit 6").
[3] In the event of a potential imminent hazard such as national security concerns, NRC can issue orders without waiting for a licensee to propose an action (e.g., "compensatory measures" or "immediately effective orders").
[4] *Id.*
[5] *Id.*

Prior to implementing a licensing program for *source material*, Congress needed to define the point at which the AEC's jurisdictional authority over *source material* would be triggered. Given that there are delineations between *source material* (i.e., uranium or thorium) as it resides in nature, the extraction of *source material ore*s by mining, and the *processing* of such *ore*s to recover their *source material* content, Congress determined that the AEC's jurisdiction should be invoked only after removal of *source material from its place in nature*. As stated in Section 62 of the AEA:

> "[u]nless authorized by a general or specific license issued by the Commission…no person may transfer or receive in interstate commerce, transfer, deliver, receive possession of or title to, or import into or export from the United States any *source material after removal from its place in nature*…."[6]

AEC's/NRC's 10 CFR Part 40 regulations define a class of *source material ore*s that, nevertheless, is not subject to Commission regulation termed *unrefined and unprocessed ores* that have been removed from their place in nature. Such ores is defined as "*ore* in its natural form *prior to any processing,* such as grinding, roasting or beneficiating, or refining."[7] Thus, *source material ore* that has not undergone *processing* activities such as those that take place at a uranium *mill* (e.g., crushing, grinding, and beneficiating) is not subject to NRC's jurisdiction.

The meaning of the phrase "after removal from its place in nature" was further clarified in NRC's 1980 Generic Environmental Impact Statement on uranium milling (GEIS), which explains that this phrase refers to *source material* "associated with processing" (i.e., at a licensed uranium mill):

> "Section 205(a) of the UMTRCA [Uranium Mill Tailings Radiation Control Act of 1978] amends the Atomic Energy Act of 1954 by adding a new Section 84 which states in part that 'the Commission shall insure that the management of any *byproduct material*, as defined in section 11e.(2) , is carried out in such a manner as…the Commission deems appropriate to protect public health and safety and the environment from radiological and nonradiological hazards *associated with the processing* [of source material ore] and with the possession and transfer of such material…"[8]

Similarly, the Atomic Safety and Licensing Appeal Board in *In the Matter of Rochester Gas and Electric* states:

> "The Atomic Energy Commission's jurisdiction in this area was transferred to the NRC on January 19, 1975, by the Energy Reorganization Act of 1974, 42 U.S.C. § 5841(f). As the quoted observation indicates, the Commission's authority over uranium *ore* and other

---

[6] 42 U.S.C. § 2092 (emphasis added) (hereinafter "Exhibit 7").
[7] *See* 10 CFR § 40.4 (hereinafter "Exhibit 8").
[8] GEIS at A-89 (emphasis added) (hereinafter "Exhibit 9").

'*source material*' attaches only '*after* removal from its place of deposit in nature,' and *not when the ore is mined*."[9]

Therefore, *source material* in uranium *ore* at a uranium *mill* is subject to AEC/NRC jurisdiction, while *source material* in uranium *ore* at a uranium *mine* or during transport to a uranium *mill* prior to *processing* is not subject to AEC/NRC jurisdiction, regardless of its *source material* concentration.

Section 62 of the AEA requires that entities seeking to transfer or receive in interstate commerce or to transfer, deliver, receive possession of or title to or to import into or export from the United States *source material* obtain a license from the Commission.[10] Section 62 also addresses *unimportant quantities* of *source material* (which Congress empowered the AEC to define) by stating that "licenses *shall not be required* for quantities of *source material* which, in the opinion of the Commission, are unimportant.[11] By regulation, the AEC/NRC defined "unimportant quantities" of *source material* to mean, "[a]ny person is exempt from the regulations in this part and from the requirements for a license set forth in section 62 of the Act to the extent that such person receives, possesses, uses, transfers or delivers *source material* in any chemical mixture, compound, solution, or alloy in which the *source material* is by weight less than one-twentieth of 1 percent (0.05 percent) of the mixture, compound, solution or alloy."[12] Quantities of *source material* exceeding the 0.05% or 500 parts per million (ppm), by weight, threshold often are referred to as *licensable source material*. The AEC General Counsel's evaluation of Section 62 determined that its provisions are *mandatory*.[13]

The AEC's choice of the 0.05%/500 ppm, by weight, threshold for *licensable source material* had little to do with potential radiological risks to public health and safety or the environment. At the time the "unimportant quantities" determination was issued, the Commission was attempting to gauge the types of uranium-bearing *ore*s that likely would be necessary to create special nuclear material.[14]

---

[9] 8 NRC 551, *6 (November 17, 1978), *citing* 42 U.S.C. § 2092 (2005) (emphasis added) (hereinafter "Exhibit 10").
[10] *See* Exhibit 7.
[11] *Id.*
[12] 10 CFR § 40.13(a) (hereinafter "Exhibit "11").
[13] *See* Letter to H. L. Price, Director, Division of Licensing and Regulation from Neil D. Maiden, Acting General Counsel, Atomic Energy Commission, *Re: Mill Tailings* (December 7, 1960) (hereinafter "Exhibit 12").
[14] The basis for the selection of the "unimportant quantities" threshold was recently highlighted in 2003 when an Interagency Working Group recommended to the Commission that a legislative amendment to the AEA be obtained to limit Commission authority over quantities of source material under the "unimportant quantities" threshold. This recommendation was rejected by the Commission stating: "Although the Commission agrees that the proposed approach is the most efficient way to address the issue, because the probability of success is very limited, the Commission does not wish to expend the resources." *See* SRM-SECY-03-0068 – *Interagency Jurisdictional Working Group Evaluating the*

In addition, current NRC regulations provide for a second type of "unimportant quantities" exemption from regulation under AEA Section 62. As stated in 10 CFR § 40.13(c)(1)(vi), "rare earth metals and compounds, mixtures, and products containing not more than 0.25/2,500 ppm percent by weight thorium, uranium, or any combination of these" are exempt from licensing.[15] This exemption often plays a crucial role at rare earths (e.g., lanthanides) recovery facilities that recover source material as part of a "side-stream" recovery process or that produce waste streams containing source material.

During the early period of the domestic uranium recovery industry, the AEC did not consider the tailings from uranium or thorium recovery to be a threat to public health and safety or the environment and, as a result, little regulatory attention focused on such tailings. Indeed, the AEC believed that its general radiation protection regulations at 10 CFR Part 20 would adequately address any potential radiation hazard posed by tailings pile overflows or seepage, as well as any airborne radiation exposure.[16] However, in the late 1960s and early 1970s, concerns about the control of uranium and thorium mill tailings began to surface. For example, the AEC learned that uranium mill tailings in Grand Junction, Colorado had been dispersed and used in the construction of residential and commercial buildings and that there existed a potential threat of adverse health impacts to the occupants of such buildings from radon gas generated by the radium in such tailings.[17]

In this timeframe, during active uranium recovery operations, the AEC (and later NRC) implemented a series of "Branch Technical Positions" (BTP) and "Regulatory Guides" to oversee the management and disposition of uranium mill tailings. However, at that time, the AEC took the position that it was without the authority to regulate uranium mill tailings after cessation of active uranium recovery operations and license termination. Later, in light of the potential health risks associated with mill tailings, the AEC re-evaluated potential regulation of mill tailings. The AEC determined that the then-recently enacted National Environmental Policy Act of 1969 (NEPA), in combination with its broad AEA authority provided it with the ability to regulate uranium mill tailings. A 1973 memorandum prepared by the AEC's Office of the General Counsel expressed the view that:

> "While judicial attitudes are difficult to predict, it would appear likely that license termination in question would be held subject to NEPA section 102(2)(c). Therefore, it is

---

Regulation of Low-Level Source Material or Materials Containing Less Than 0.05 Percent By Weight Concentration Uranium and/or Thorium, (October 9, 2003) (hereinafter "Exhibit 13").

[15] *See* Exhibit 11.

[16] *See generally American Mining Congress, Commingled Uranium Mill Tailings-A Historical Perspective,* (March 4, 1985).

[17] *Use of Uranium Mill Tailings for Construction Purposes: Hearings Before the Raw Materials Subcomm. of the Joint Comm. on Atomic Energy*, 92d Cong. At 4-17, 70-92 (1971).

> likely that AEC has the authority to require environmental protection measures with regard to the mill tailings."[18]

This opinion was elaborated upon further by NRC legal staff:

> "The termination of a license is a procedure authorized by the Atomic Energy Act of 1954, as amended, and may be a major federal action with a significant environmental effect. NEPA provides a supplemental grant of *substantive* authority to condition the termination for the purpose of environmental protection. (See Sections 103 and 105 of NEPA)
>
> Accordingly, the Commission would have the authority to respond favorably to the petition to establish regulations for the post-license environmental control of uranium mill tailings. The basis of environmental authority is NEPA, as implemented through the licensing authority of the Atomic Energy Act of 1954, as amended."[19]

Subsequently, however, federal court decisions determined that NEPA is purely a *procedural* statute and *does not* provide an agency with *supplemental* substantive authority to regulate in a given area; an agency derives its jurisdiction to regulate in any area solely through its organic statute.[20] As a result, it became increasingly clear that legislation would be required to authorize the control of uranium mill tailings after license termination.

As noted above, in 1978, Congress enacted UMTRCA to provide express statutory authority to regulate the production, containment, and monitoring of uranium and thorium mill tailings during and after active recovery operations. UMTRCA was based upon a finding that uranium and thorium mill tailings located at *active* (i.e., licensed) and *inactive* (i.e., abandoned) mill sites may pose a significant, potential radiation health hazard to members of the public.[21] In explaining the need for UMTRCA, the House Report accompanying the legislation relied upon the description of the potential public health hazard of mill tailings in the testimony of then-NRC Chairman, Dr. Joseph Hendrie:

---

[18] *AEC Authority to Require that a Uranium Mill Licensee Provide Environmental protection Measures with Respect to Mill Tailings as a Condition to License Termination*, Memorandum from Howard K. Shapar, Assistant General Counsel, Licensing and Regulation Division, AEC to L. Manning Muntzing, (March 29, 1973) (hereinafter "Exhibit 14").

[19] Memorandum from Joanna Becker, Chief Regulations Counsel, NRC to L.C. Rouse (October 17, 1975) (emphasis added).

[20] *See e.g., NRDC v. EPA*, 822 F.2d 104 (D.C. Cir. 1987) (holding that NEPA does not act to broaden an agency's substantive powers); *see also Cape May Greene, Inc. v. Warren*, 698 F.2d 179 (3rd Cir. 1983) (stating that NEPA does not grant an agency jurisdiction outside the scope of the jurisdiction set forth in its organic statute) (hereinafter "Exhibit 15").

[21] Pub L. No. 95-604, at 2(a), 92 Stat. 3021-22 (hereinafter "Exhibit 16").

> "The NRC believes that long-term release from tailings piles may pose a radiation health hazard if the piles are not effectively stabilized to minimize radon releases and prevent unauthorized use of the tailings."

The centerpiece of this new grant of direct authority to regulate uranium mill tailings was the creation of a new category of AEA-regulated materials. Specifically, the definition of "byproduct" material was modified when Congress created "11e.(2) *byproduct material*," which is defined to mean:

> "the tailings or wastes produced by the extraction or concentration of uranium and thorium from any *ore* processed *primarily* for its source material content."[22]

This class of material was (and is) unique among the materials regulated under the AEA, because it is not defined solely in terms of its radiological characteristics, but instead is defined broadly enough to encompass "all wastes"—both radioactive and *non*-radioactive—resulting from uranium *ore* processing at licensed uranium recovery facilities.[23] Since this new definition of "*byproduct material*" is intended to be expansive and to cover the broad range of wastes associated with uranium milling, the tailings and *all* other wastes associated with uranium recovery produced at AEA-licensed uranium milling facilities are referred to as "11e.(2) *byproduct material*." *The relationship between source material and 11e.(2) byproduct material is the fundamental driving force behind uranium recovery regulations, relevant guidance and policies, and licenses/permits from 1978 to the present*.

---

[22] AEA Section 11e.(2) (42 U.S.C. § 2014(e)(2)) (emphasis added). Previously, "*byproduct material*" had been defined to mean "any radioactive material (except special nuclear material) yielded or made radioactive by exposure to radiation incident to the process of producing or utilizing special nuclear material." *See* 42. U.S.C. § 2014(e)(1). This definition is currently located at Section 11e.(1) of the AEA.
[23] *See* 57 Fed. Reg. 20,525, 20,526 (1992) (hereinafter "Exhibit 17").

IV. Additional Submission on the Fonner Memorandum and Lack of Need for Dual Regulation, Prepared by Thompson and Pugsley, Attorneys at Law

As detailed in the Fonner Memorandum, which was submitted by Black Range Minerals as part of its White Paper from 2015, NRC has maintained its position that it technically has the jurisdiction to regulate ores after their removal from their place in nature under the AEA; but, as detailed in 10 CFR Part 40, the agency selectively exempted unrefined and unprocessed ores from regulatory authority. This theme can be summed up as a matter of NRC having the ability to regulate such ores but electing not to do so. The inquiry on ablation should be no different. It is inconceivable that an activity that produces ores that are high-grade and represents no incremental public nor occupational dose threat should require both a mining permit and an AEA license. It has been the mission of agencies such as NRC to minimize duplicative regulation as evidenced by its efforts with the U.S. EPA and the American Mining Congress in the 1980s and 1990s to rescind 40 CFR Part 61, Subparts I and T under the Clean Air Act. In this instance, EPA agreed to rescind these regulations and NRC revised its rules to reflect the previous EPA requirements thereby eliminating the need for two authorizations where one would be sufficient. In the instant case, State mining regulations are more than adequate to address public and occupational health and safety and there should be no need for AEA jurisdiction to be invoked. To overregulate an activity such as ablation, which provides multiple, tangible benefits by economically recovering ore without generated an undue amount of waste would be to penalize innovation and encourage dual regulation. The post ablation ore, when it reaches a licensed mill facility, will be regulated in accordance with NRC's or an Agreement State's AEA regulatory program and the resulting tailings will be managed until license termination when they will be turned over to DOE for long-term surveillance and monitoring. Thus, Western Uranium strongly encourages CDPHE to consider these factors when making a determination

V. Response to Comment at June 1, 2016 Stakeholder Meeting in Naturita, CO on Compliance of the Sunday Mine Complex with USEPA NESHAPS During the Period 2008 – 2010

At the June 1, 2016 stakeholder meeting located in Naturita, CO, Ms. Jennifer Thurston stated that there is a question from the EPA on the validity of the annual US EPA NESHAPS reports for the Sunday Mine Complex and further wondered whether Steve Brown was aware?

Mr. Brown stated that he was unaware of this and would look into it. Following the meeting Mr. Brown approached Ms. Thurston for additional specifics or information pertaining to the assertion but she would not speak with him.

It is assumed that this comment was in reference to information provided in Attachment 1.2 of Black Range Minerals' submittal to CDPHE of April 4, 2016 entitled *Estimates of Public Exposure and Risk from Application of Ablation Mining in the Sunday Mine,* Section 1.0 and Table 1 which presented references to three annual USEPA NESHAPS compliance reports submitted by the former operator of the Sunday Mine, Dennison Mines, for the years 2008-2010.

Since no supportive information for this claim could be found via Internet searches, the individual who was responsible for compliance for Dennison Mines at that time (now Energy Fuels) was contacted. David Frydenlund, Vice President and counsel with Energy Fuels, in a conversation with Steve Brown on June 22, reported that there were no "non compliance" notices received from EPA nor any other questions from EPA with regards to any of these three annual NESHAPS reports for the Sunday mine.

It is noted that regards to radon monitoring techniques being used specifically at Dennison's La Sal mining complex, EPA had required Dennison (now Energy Fuels) to conduct a comparison study between two radon monitoring methods referred to "A6" (active continuous sampling) vs. "A7" (passive sampling devices). Energy Fuels conducted this study and submitted results to EPA in 2014. Discussion with EPA on the results of this study continues.

VI. Specific Comments Prepared by Western Water and Land on the White Paper from Tallahassee Area Community

Following are comments copied from ***Part III – Technical Implications of the Technology*** *of the Tallahassee Area Community White Paper and subsequent responses.*

1. The ablation units are reported to be road-transportable and would be assembled on site for independent operation. Assuming a self-contained power source and that the appropriate licenses and permits were obtained, this could be at inactive as well as active mine sites, at isolated locations of stockpiled ore (or proto-ore/mine waste), or even at heap leaching locations as well as at conventional uranium mills.

2. Despite the claims of the proponents of ablation that it is strictly a physical process and that no chemicals are intentionally introduced into the process, only water (a chemical compound referred to as "the universal solvent), in fact, a number of chemical compounds have significant – if unintended – impact on the ablation process. In order to create the high energy impact zone required to reduce the injected ore slurry to the desired fine grain, the slurry water must be pressurized prior to injection. As water is pressurized, an increased amount of atmospheric oxygen will be introduced into the slurry. Pursuant to Henry's Law, the amount of increased oxygen incorporated into water is proportional to the degree of pressurization of the water. That oxygen, along with naturally occurring chemical compounds in the ore (i.e. pre-historic carbonaceous material, carbonates and bicarbonates, iron pyrites, etc.) will create an oxidizing environment in the ablation impact chamber similar to the use of an oxidizing lixiviant in *In situ* Leach Solution Mining (ISL).

Response:

Black Range is aware of the potential dissolution of uranium minerals during the ablation process. The occurrence of the aqueous phase of uranium was briefly mentioned in attachment 2.4 of the April 4, 2016 response to the CDPHE's request for additional information and during the public meetings.

In general, uranium is more soluble in oxidizing alkaline conditions. The presence of dissolved oxygen in water in contact with solid mineral phases of uranium enhances dissolution of uranium minerals. The solubility of oxygen in water is dependent on temperature, pressure (of the gas phase), and salinity. As indicated by Henry's Law, the dissolved oxygen concentration in water is directly proportional to the partial pressure of oxygen, but concentrations are inversely proportional to temperature and salinity. The partial pressure of oxygen at sea level is greater than that at 6,000 ft above sea level. For example, at 25C, the maximum dissolved concentration of oxygen in a water solution with a conductivity of 5,000 µsiemens/cm, at sea level (760 mm Hg), is 8.13 mg/l. Whereas, under the same conditions except an elevation of

6,000 feet, the dissolved oxygen concentration is 6.46 mg/l (http://water.usgs.gov/software/DOTABLES).

*The author is incorrect to say that "*Pursuant to Henry's Law, the amount of increased oxygen incorporated into water is proportional to the degree of pressurization of the water." *Henry's Law is based on the pressure or partial pressure of the gas phase of the gas of interest, not the water pressure. Air entrained in the closed portion of the AMT equipment where pressures may attain 80 psi, may contribute to an increase in overall dissolved oxygen as the pressure forces the reaction from gas phase to aqueous phase. However, at the impact point of the ablation process, conditions are under atmospheric pressure conditions and oxygen dissolved due to previous pressurization is expected to degas from the water.*

The actual influence of dissolved oxygen in water used in the AMT process requires further study. Precise calculations as to the impact of AMT on the magnitude of uranium mineral dissolution have not been performed at this stage. Geochemical modeling can be performed to estimate this parameter, however, empirical data obtained through pilot testing will provide more useful and applicable information. Regardless of the specific concentration of dissolved uranium in AMT water and wastewater, if it is found that discharge of waste water is necessary, Black Range will discharge any waste water in accordance with the acquired discharge (CDPS) permits.

3. The expected oxidation reaction will cause the chemical conversion of a portion of the insoluble $U+^{4}$ uranium in the ore to the soluble $U+^{6}$ valence state thereby resulting in some of the uranium being dissolved into the slurry water. It is unknown just how much would be solubilized under production conditions since it would depend on the amount of time the ore fragments are in the impact chamber and many other factors. The Ablation Technologies patent, however, reports an example of more than 25% of the original ore concentration of uranium found dissolved in recovered process water [Example 7, section 0108 of the Patent Application, page 13] which was able to be recovered (along with the accompanying radium) by the same ion-exchange process used in ISL [the last two sentences of Example 3, Section 0091 of the Patent Application, page 11]

Response

The Ablation Technologies patent refers to dissolved uranium concentrations in (post) ablation water associated with uranium ore in Example 8, Section 0108, page 13. The patent text refers to the measurement of uranium levels using X-ray Fluorescence (XRF) methods in "clarified" ablation water. XRF methods are typically used as a screening tool to obtain an approximate concentration of an element. Laboratory analysis is used to accurately quantify elemental concentrations. The definition of "clarified" is not provided.

It is assumed that the water was not filtered using a 0.45 um filter or smaller. This assumption appears justified as filtering is mentioned elsewhere in the patent document (Example 9, Section 0111, page 14). Based on this, the referenced concentration of uranium in the ablation water of 22 to 25 ppm, approximately 28% of the uranium in the head ore, should be considered an estimate of these parameters. The presence of fine solids (nondissolved particles) in the ablation water could significantly affect the measured uranium concentrations. As mentioned in Example 9, Section 0111, page 14, uranium was not detected in a filtered sample of ablation water (deionized water was used in the slurry make-up), using XRF methods. An unfiltered sample did show a detection of uranium.

Black Range is aware of the fact that ablation water will contain dissolved and undissolved uranium species. As eluted in Example 9, Section 0112, page 14 of the patent, ablation with untreated water (e.g. culinary water, groundwater, etc.) some of the uranium is expected to dissolve into the ablation fluid. This is also expected to occur in certain treated waters depending on ore composition and a number of other factors. The presence of dissolved uranium species in ablation wastewater will be monitored, and based on a cost-benefit analysis of uranium recovery and overall environmental considerations of wastewater management, Black Range will implement methods to recover this uranium fraction. Recovery methods may include but are not limited to evaporation, water treatment, and/or forms of offsite disposal. It is anticipated that if water treatment is selected as a whole or partial remedy for ablation wastewater, the treated water will be recycled to the ablation system, thereby reducing the overall waste stream.

4. The ablation proponents claim that up to 95% or more of the uranium in the original unrefined and unprocessed ore (reported results from the experimental unit indicate a range of 80% to 99%) would be recoverable in the “ablated concentrate”. That means that 5% -- up to 20% -- would remain in the so-called “barren rock” or “clean sand” proposed to be used as backfill.

5. The uranium recovery rate claimed for the ablated concentrate does not account for the amount of uranium that will be dissolved into the process water. Unless that water is subjected to a ISL leachate- type ion exchange uranium recovery process, a significant amount of the targeted product would be lost as waste. Either the economic benefits of the ablation would be reduced or there would be additional regulatory implications.

Response

Please see response to Item no. 3.

6. Assuming a 20 ton per hour -- in an eight or ten hour day -- production unit, a massive quantity of waste (~90% of the original ore mass) would be produced that would be not only

radioactive and a radon emissions generator, but also a potential source of other health and environmental concerns such as acid formation from sulfates in the ore and radioactive dust dispersion. If this waste (gangue) were to be used as backfill of an underground mine, its geophysical and hydrological impact on the surrounding area and groundwater would have to be considered.

Response

It is normal practice for a mine operator to address waste rock management under the mining permit. Black Range would address the concerns mentioned above as well as others under the required Environmental Protection Plan (EPP) as part of the DRMS mine permit. The waste rock generated from the ablation process is expected to have between 5 and 10% of the uranium content that was present before ablation is conducted. If placed in the mine for disposal, the waste rock would contain 90 to 95% less uranium and therefore significantly less radioactive and less radon generating than the original insitu ore. Acid formation would be evaluated through analytical testing that may include maximum acid production potential (AP), maximum neutralization potential (NP), net neutralization potential (NNP) and/or acid/base account (ABA). Other waste rock testing includes synthetic precipitation leaching procedure (SPLP) or meteoric water mobility procedure (MWMP). These tests evaluate the potential for waste rock to leach toxic materials. Black Range will assess the potential leaching of waste rock placed underground and any impact to the surrounding aquifers.

7. The process water recovered by partially dewatering the fine and coarse grained portions is proposed to be recycled through the ablation unit. Unless it is pre-treated, the concentrations of uranium, radium, and other heavy metals in the water will increase as it is repressurized and exposed to additional ore fragments. If it is pretreated and the uranium is recovered by the ion exchange process, that is the same procedure as obtained by *In Situ* Leach Solution Mining. The resulting recovered or "depleted" water ultimately would likely have to be disposed of by injection into an EPA UIC approved Class I Deep Injection Well as is the waste water from ISL operations.

Response

Black Range is aware of the concentration of solutes in recycled water of the ablation system. Treatment methods to remove uranium or other constituents will be evaluated once chemical analysis is obtained in pilot testing the Sunday material. The potential for treatment by ion exchange exists along with other methods. Ion exchange is a common treatment method that selectively removes solutes in wastewater; its use in In Situ Leach Solution Mining is not relevant to the AMT permitting process. It is not correct to say that a UIC approved Class I Deep Injection

Well will be the likely disposal method for depleted wastewater. Black Range will evaluate several methods to dispose of ablation wastewater, including, but not limited to evaporation and treatment and discharge under a CDPS permit.

Coloradoans Against Resource Destruction
P.O Box 599
Wellington, Colorado 80549

July 22, 2016

SENT VIA EMAIL ATTACHMENT

Ms. Jennifer T. Opila, MPA, Manager
Radiation Control Program
Colorado Department of Public Health and Environment
4300 Cherry Creek Drive South
Denver, Colorado 80246-1530

Subject: Comments on Ablation Process – Black Range Minerals

Dear Ms. Opila:

Thank you for the opportunity to comment on the question of how uranium ablation should be regulated under the Colorado Rules and Regulations Pertaining to Radiation Control. The proponent of this new uranium processing technology, Black Range Minerals Ltd. ("Black Range"), has proposed that the initial location for its commercial use would be the Sunday Mine Complex in San Miguel County, Colorado.

Coloradoans Against Resource Destruction ("CARD"), a grass roots organization of residents of Weld and Larimer counties dedicated to protecting ground water and other natural resources, is concerned that uranium ablation may be proposed for the Centennial uranium project located between the towns of Wellington and Nunn. The current owner of the Centennial project, Azarga Uranium Corp., has a long financial history with Black Range.

Although much of the proposed Centennial project consists of deep ore deposits that are amenable to in-situ leaching ("ISL"), a significant portion of the identified deposits are shallow and cannot economically be mined with ISL. These shallow deposits may be mined by the open pit method or by underground borehole mining. In either of these scenarios, ablation may be proposed to upgrade and concentrate the mined uranium ore prior to further processing at a conventional uranium mill.

Because of the potential use of ablation at the Centennial project as well as other sites throughout Colorado, the department should make its determination on a statewide basis, taking into account the varied technical issues associated with deploying ablation technology at different sites involving different mining and extraction methods, as well as different geological, hydrogeological, and environmental conditions.

To adequately protect both the surface and subsurface environments at these various sites, as well as worker safety and public health, a robust licensing regime should be required. Ablation should be licensed as uranium milling, or alternatively, new rules should be established that are compatible with U.S. Nuclear Regulatory Commission ("NRC") regulations under Colorado's Agreement State contract with the NRC.

Following are technical comments on the ablation process, regulatory considerations, and assertions made by Black Range:

Comment No. 1 – Uranium ablation is a novel, post-mining beneficiation process for concentrating uranium.

The patent application for uranium ablation was published on March 21, 2013, and the patent was granted to Ablation Technologies, LLC on February 11, 2014. The ablation technology has never been commercially applied. In fact, Black Range, a wholly-owned subsidiary of Western Uranium Corporation ("WUC") and the holder of a non-exclusive license to use the ablation technology, has not yet built a "full-scale ablation machine", according to WUC's amended Form 10-12b filed with the U.S. Securities and Exchange Commission on June 22, 2016 ("SEC filing").

As proposed, ablation would be used to concentrate uranium ore after the ore has been extracted from a sandstone-hosted uranium deposit by underground mining, open pit mining, or borehole mining, according to the patent and SEC filing. Further, the ablation technology may be used to concentrate uranium in waste rock and overburden from historic mining operations, according to Black Range.

Beneficiation is any process that improves the economic value of an ore by removing the commercially worthless material that surrounds, or is closely mixed with, a target mineral in an ore deposit. Beneficiation occurs after mining.

Ablation processing is a beneficiation process that would occur after the mining/extraction process and before acid leaching and other processing at a conventional uranium mill to produce yellowcake.

A federal rule promulgated by the U.S. Commerce Department's Bureau of Industry and Security defines beneficiation as "The concentration of nuclear ores through physical or any other non-chemical methods." (15 C.F.R. § 781-786, p.65129)

The Bevill Amendment to the federal Resource Conservation and Recovery Act lists over twenty beneficiation activities including crushing, grinding, dissolution, filtration, sorting, sizing, and drying. (40 C.F.R. § 261.4(b)(7)(i)) Several of these beneficiation activities, specifically, crushing, filtration, sorting, sizing, and drying, are employed in the ablation process, according to the patent and Black Range's Attachment 2.3.

The U.S. Environmental Protection Agency defines all activities occurring after the removal of uranium ore from a deposit as beneficiation, including crushing and concentration. (Extraction and Beneficiation of Ores and Minerals, Volume 5 Uranium, USEPA, January 1995)

Colorado radiation control regulations require licensing under Part 18 for uranium and thorium processing facilities that produce byproduct material. Byproduct material is defined as "tailings or wastes produced by the extraction or concentration of uranium or thorium from any ore processed primarily for its source material content…"

Part 1 of the Colorado regulations defines source material as "uranium or thorium, or any combination of uranium or thorium, in any physical or chemical form, including ores that contain, by weight, one-twentieth of 1 percent (0.05 percent) or more, of uranium, thorium or any combination thereof."

With respect to ablation, for a facility to be required to obtain a license under Part 18 of the Colorado regulations, it must:

- Process uranium ore,
- Produce tailings or wastes,
- Extract or concentrate uranium, and
- Process ore primarily to obtain material that contains, by weight, 0.05% or more of uranium

Ablation entails all these activities, therefore it must be licensed under Part 18.

Comment No. 2 – The primary purpose of ablation is to obtain source material, not to "high-grade" or "sort" ore prior to sending the ore to a uranium mill, as argued by Black Range.

High-grading is a technique used in open pit mining. It is the process of mining the highest grade zones of the ore body to provide short-term economic benefit, on the assumption that the remaining areas of the ore body will be mined as the target mineral price increases. It is clearly mining, but high-grading may be more accurately described as a mine planning or scheduling tool. Its similarity to ablation is tenuous at best.

Likewise, ablation is more than ore sorting. A common process for sorting run-of-mine uranium-bearing ore is radiometric sorting. Other sorting processes include flotation and gravity separation. Radiometric sorting uses sensors to detect radioactivity in uranium ore and allows for the ore to be separated into accept and reject fractions prior to leaching at a mill. While both radiometric ore sorting and ablation may involve crushing prior to processing, and both result in the upgrading of the uranium content, the similarities stop there.

Unlike ablation, radiometric ore sorting is a dry process. Therefore, there is no opportunity for uranium to be dissolved into process water. In contrast, the ablation patent includes a discussion of test results demonstrating that one-tenth to one-third of the total uranium in pre-ablation run-of-mine ore can be dissolved into the process water, depending on the deposit and the water used. The patent holders theorize that naturally occurring carbonates in untreated water solubilize uranium from the ore during ablation.

Typical uranium ore sorting results in accept and reject fractions that differ only in their respective uranium grades. In contrast, ablation subjects the ore to multiple high-velocity impacts which change the physical appearance of the ore, and after further processing produces a paste concentrate. This paste concentrate bears no physical resemblance to the pre-ablated ore, and rather than being ore, is more accurately described as an intermediate uranium concentrate, an industry term used to describe beneficiated material prior to chemical leaching.

Ablation also generates a liquid waste stream that contains up to a third of the uranium found in the pre-ablated ore. This solubilized uranium has undergone chemical changes. Therefore, ablation both physically and chemically changes the ore.

Black Range argues that the primary purpose of ablation is not to obtain source material. To support this argument, Black Range has created its own definition of source material which is

different from the definition in the Colorado regulations. Black Range defines source material as uranium which has been extracted from ore and separated from its decay series radionuclides. (Ablation Mining Technology presentation, slide 32) However, as noted above, the legal definition of source material includes uranium "in any physical or chemical form, including ores that contain, by weight, one-twentieth of 1 percent (0.05 percent) or more, of uranium…"

According to Black Range, the post-ablation concentrate will average approximately 1% uranium, twenty times the threshold for classification as source material. (Black Range Attachment 2.2, pg 2) Moreover, the definition of source material in the Colorado regulations is silent on whether the uranium isotopes must be separated from their decay series radionuclides. Hence, Black Range's argument that post-ablation uranium in secular equilibrium with its decay products does not qualify as source material is incorrect.

Comment No. 3 – Ablation extracts uranium.

Black Range argues that ablation does not extract uranium, relying on a definition of extraction from a 1968 dictionary published by the United States Bureau of Mines/Department of Interior. It is a revision of the "Glossary of the Mining and Mineral Industry" which first appeared in 1918. The editor, Paul Thrush, points out in the preface that the dictionary's roughly 55,000 terms do not include "legal mining terminology".

The dictionary includes nine definitions of extraction. The fifth definition, the only one cited by Black Range, is:

> Used in relation to all processes that are used in obtaining metals from their ores. Broadly, these processes involve the breaking down of the ore both mechanically (crushing) and chemically (decomposition), and the separation of the metal from the associated gangue.

Since ablation is not intended to chemically break down ore, it is not extraction according to Black Range.

But in all other respects, the definition fits ablation, and "broadly" would seem to allow for exceptions, specifically processes which separate a metal from waste rock by mechanical means only. In fact, Black Range failed to include the rest of the definition of extraction which includes "ore-dressing", defined as "The cleaning of ore by the removal of certain valueless portions…", and "The same as mineral dressing". The dictionary has two definitions of "mineral

dressing", including "Physical and chemical concentration of raw ore into a product from which a metal can be recovered at a profit", but also:

> Treatment of natural ores or partly processed products derived from such ores in order to segregate or upgrade some or all of their valuable constituents, and/or remove those not desired by the industrial user.

Interestingly, the dictionary goes on to define extraction as "The separation of a metal of valuable mineral from an ore, or concentrate". This definition, not provided by Black Range, accurately describes ablation, which is designed to separate the uranium "patina" from the host sand grains.

Apart from the issue of whether the DOI's dictionary is authoritative with respect to the CDPHE's determination, it appears that the terms extraction, ore dressing, and mineral dressing have historically been used to describe numerous processes designed to separate target minerals from commercially-worthless materials, whether by physical means, chemical means, or both.

Comment No. 4 - Black Range's argument that ablation is not subject to CDPHE's jurisdiction because it is "unrefined and unprocessed ore" which has been removed from its place in nature but has not undergone processing activities, is incorrect.

Federal regulations define processing as "grinding, roasting, or beneficiating, or refining". (10 CFR §40.4) The regulation does not address where the processing takes place – at the mine or at a conventional mill.

Black Range cites the NRC's 1980 Generic Environmental Impact Statement on uranium milling to argue that processing can only take place at a conventional uranium mill, and that any activity conducted at a mine site is therefore mining, not milling:

> "Section 205(a) of the UMTRCA [Uranium Mill Tailings Radiation Control Act of 1978] amends the Atomic Energy Act of 1954 by adding a new Section 84 which states in part that 'the Commission shall insure that the management of any *byproduct material*, as defined in section 11e.(2) , is carried out in such a manner as…the Commission deems appropriate to protect public health and safety and the environment from radiological and nonradiological hazards *associated with the processing* [of source material ore] and with the possession and transfer of such material…"

The GEIS citation is actually a response to a public comment stating that the proposed milling regulations should not address ore pads because no uranium milling or ore processing to

create source material takes place until ore enters the mill and is processed in the first step of ore grinding.

But Black Range includes only part of the NRC's response in its White Paper, and omits the following:

> The storage of ore on an ore pad prior to milling clearly constitutes an activity associated with processing. Under the language of the new Section 84, therefore, it is within NRC's authority to regulate ore pad activities.

The fact that the NRC can regulate relatively benign ore storage as a processing activity contrasts with Black Range's position that ablation, a beneficiation process involving crushing, slurry preparation, hydraulic impact separation, filtering, dewatering, and (unintentional) uranium dissolution, is merely a mining process that does not fall under NRC and Agreement State regulations.

Not only is ablation clearly a processing activity, regardless of where it is conducted, but Black Range has selectively cited an NRC document while omitting context that conflicts with its narrative.

Black Range and WUC have requested a regulatory determination from the department based on deployment of the ablation technology in the underground Sunday Mine Complex. This decision was made presumably to buttress the argument that it is a mining activity and not milling. By proposing to locate the ablation facility in an underground mine, Black Range argues that ablation is actually a mining process not subject to the department's regulations.

However, for several years, Black Range has touted ablation as a uranium concentration process that can improve the economics of various diverse projects. Initially, Black Range proposed ablation in conjunction with underground borehole mining at the proposed Hansen-Taylor Ranch project in Fremont County. Under this scenario, ablation would be conducted on the surface to process uranium ore slurry pumped from borehole mining wells.

Black Range then proposed to use ablation to process the "October" uranium stockpile located in Mesa County, Colorado, and actually conducted "extensive ablation testwork" on October ore samples at a facility in Casper, Wyoming.

Later, Black Range proposed that ablation could be used to process various other low-grade ore and waste rock stockpiles in western Colorado.

More recently, WUC has discussed its importation of a small quantity of uranium from an unnamed African mine for ablation testing.

And GoviEx, a Canadian uranium mining junior, has proposed the incorporation of ablation into its milling facility for the Madaouela project in Niger.

In a June 2015 technical report on Anfield Resource Inc.'s underground Velvet-Wood Uranium Project in San Juan County, Utah, the author recommends an "evaluation of upgrading the mined material on-site by mechanical means including sizing and screening, attrition scrubbing, and/or ablation".

When deliberating the regulation of ablation, the department should consider all of the various scenarios for ablation and should not be swayed by the simplistic argument that deployment underground at the Sunday Mine Complex means ablation is mining, and therefore is not processing of uranium ore for its source material content.

Comment No. 5 – Ablation concentrates uranium, even though it does not produce yellowcake.

Concentrating (or extracting) uranium is one of the elements of the federal "byproduct material" definition that triggers the source material licensing requirement. Black Range once again consults the Department of Interior's "Dictionary of Mining, Mineral and Related Terms" to support its argument that ablation does not concentrate uranium. As noted earlier, the 1968 revision of the 1918 dictionary does not include "legal mining terminology" according to its editor.

Black Range makes the following argument in its 2015 White Paper:

> With respect to *concentration of source material primarily for its source material content*, the DOI's Dictionary defines "concentrate" as "separat[ing] ore or metal from its containing rock or earth. *The concentration of ores always proceeds by steps or stages. Thus, the ore must be crushed before the mineral can be separated, and certain preliminary steps, such as sizing and classifying, must precede the final operations, which produce the finished concentrates.*" Based on this definition, AMT falls within the initial steps of the mining process or those steps that are identified as "preliminary" prior to engaging in "final operations" that produce a finished concentrate, such as uranium yellowcake.

The first part of the DOI dictionary's definition, "…to separate ore or metal from its containing rock or earth" sounds very similar to several Black Range statements on ablation:

> AMT can be used effectively to separate the precipitated minerals from the sand grains. (White Paper, page 3)
>
> This slurry can be subjected to separation by physical screening, based on grain size, where the finer ore minerals are separated from the coarser waste rock. (White Paper, page 5)
>
> (ablation disassociates) the mineralized crust containing uranium and other minerals from the host sand grains and further separate(s) the minerals from the non-mineralized host rock… (White Paper, page 26)
>
> …AMT is designed only to *disassociate* a mineralized "crust" from an underlying sand grain so that the uranium/mineral-bearing material may be separated… (White Paper, page 27)

These Black Range statements are all consistent with the DOI dictionary's definition of "concentrate". Black Range also omits the following definition from the DOI dictionary's entry for "concentrate": "To intensify in strength or to purify by the removal of valueless or unneeded constituents; con-dense intensify."

And Black Range fails to include the dictionary's first definition of "concentration", "Separation and accumulation of economic minerals from gangue."

Black Range incorrectly asserts that the "preliminary steps" mentioned in the definition are steps in the mining process, and that ablation is one of these preliminary steps. The definition actually describes preliminary and final steps in the concentration process, and that "concentration of ores always proceeds by steps or stages."

The dictionary's definition discusses a step-by-step process that concentrates ores and produces a finished product, which Black Range correctly identifies as uranium yellowcake.

Black Range argues that "…AMT is not designed to *concentrate* or isolate uranium into a final product for introduction into the nuclear fuel cycle…" But the fact that ablation does not produce yellowcake is irrelevant; it is simply an intermediate step in a multi-step process which does produce yellowcake.

Comment No. 6 – Ablation physically alters uranium ore.

Black Range makes the surprising claim that "…there is no physical change to a given ore during and after AMT…" (White Paper, page 28)

A common definition of physical change is a change in which the substance changes form but keeps its same chemical composition. "Form" is the shape, visual appearance, constitution or configuration of an object.

Every step in the ablation process results in physical change, starting with crushing of the run-of-mine ore and ending with dewatering of the paste concentrate. The most extreme physical change occurs as the two opposing streams of uranium ore slurry are blasted at each other, reducing the particle size and separating much of the precipitated uranium from the host sand grains.

More importantly from a regulatory standpoint is the fact that the ablation process invariably results in some portion of the uranium in the run-of-mine ore being dissolved into the process water, as discussed below.

Comment No. 7 – Ablation is not a purely mechanical process, and is in fact source material processing.

Perhaps the most pervasive myth about uranium ablation is that it is a purely mechanical process. Yes, chemicals or reagents are not added to the system. But the inconvenient truth is that a significant portion of the uranium contained in the pre-ablated ore can become dissolved in the process water as the uranium slurry is cycled through the ablation machine.

This occurs as dissolved oxygen and naturally occurring carbonates present in the process water oxidize and complex the uranium located between the sand grains and in carbonaceous materials, and mobilize the uranium into the ablation system water.

This system loss through solubilization is discussed in the 2014 ablation patent issued to Ablation Technologies, LLC:

> When sandstone-hosted uranium ores are ablated with untreated water (e.g., culinary water, ground water, etc.), some of the uranium may dissolve into the ablation fluid. The amount dissolved varies depending on the deposit and the water used, but may range from one-tenth to one-third or more of the total uranium in the ore. Without being bound to a particular theory, it is believed that naturally occurring carbonates in the untreated water solubilize some of the uranium from the ore during ablation.

Black Range proposes to use untreated mine seepage water at its Sunday Mine Complex facility.

Black Range's report from consultant Western Water & Land, Inc. addresses this solubilization process, noting that a post-ablation process water sample from tests of material from the October Ore Pile had a dissolved uranium concentration of 3.25 mg/L. This concentration is over 100 times greater than the EPA's maximum contaminant level for uranium in drinking water.

The report goes on to note that dissolved uranium concentrations in the post-ablation water could conceivably be greater than five times the 3.25 mg/L test result, or as high as 16.25 mg/L, due to continual recycling of the process water. But the author acknowledges that insufficient research has been done on this question:

> However, to conserve water resources, the AMT water will be recycled for use and the concentration of uranium in continually recycled AMT water is expected to increase with each cycle of reuse. It is conceivable that AMT wastewater could reach concentrations greater than five times that of the October Post Ab sample (Table 1). Because of the complex hydrochemistry relationships involved, estimating the final concentration of uranium in the AMT system water before treatment or disposal cannot be done without further AMT trials and associated research.

This solubilization process is the same as the leaching that occurs at ISL facilities, the only difference being that ISL operators intentionally add oxygen and carbonate/bicarbonate to the injected water to accelerate the leaching process and increase the uranium concentration of the leachate. The NRC's Generic Environmental Impact Statement for In-Situ Leach Uranium Milling Facilities explains the geochemical reactions when uranium is mobilized at ISL facilities:

> The oxidant (oxygen or hydrogen peroxide) in the lixiviant oxidizes uranium from the relatively insoluble tetravalent state (U^{4+}) to the more soluble hexavalent state (U^{6+}). Once the uranium is in the 6+ oxidation state, the dissolved carbonate/bicarbonate causes the formation of aqueous uranyl-carbonate complexes that maintain oxidized uranium in solution as uranyl ion (UO_2^{2+}).

The fact that, using untreated water, the ablation process results in geochemical reactions that convert one-tenth to one-third of the run-of-mine ore from a metallic state to an oxidized uranium solution contradicts Black Range's assertion that ablation is not source material processing. For a significant portion of the ore, ablation is actually a leaching process that happens to occur without the addition of oxygen and carbonate/bicarbonate to the process water.

The department should note that Black Range's "White Paper" materially misstates the results of ablation, obfuscating the issue of uranium solubilization:

> Upon separation, the waste rock stream typically comprises approximately ninety (90) percent of the mass but contains only about five (5) percent of the uranium (and any other minerals) that was present in the pre-AMT material. Logically, the ore stream comprises the balance of the mass (~10%), and contains the balance of the uranium and other minerals that coated and cemented between individual sand grains prior to AMT (~95%).

Ninety-five percent of the uranium in the pre-ablation run-of-mine ore does not end up in the post-ablation "ore stream". The patent explains that the 95% figure applies only to the uranium fraction that is not dissolved in the process water:

> The tests performed on sandstone-hosted uranium ores show that, within five minutes, the ablation process concentrates almost all of the *non-solubilized uranium* into a very small fraction of the original ore. *An average of 95% of the non-solubilized uranium was present in the minus 325-mesh material*, which accounted for between 5% and 7% of the mass of the ablated ore. (emphasis added)

According to the patent's discussion of the tests, after five minutes of ablation, 31.7% of the ore's uranium content is dissolved in the process water. Adding the 5% of non-solubilized uranium left in the waste sand (3.4% of the total uranium in the ore), total losses in the ablation process would be 35.1%, corresponding to a recovery rate of just 64.9%.

Black Range has not directly addressed the issue of processing the waste water to recover the solubilized uranium. The likely recovery method would be circulating the water through ion exchange columns, as is done in in-situ leaching facilities. It is unclear whether Black Range is trying to avoid a comparison to ISL with its strict radiation control regulations for uranium milling, or whether insufficient testing of ablation has been conducted, leaving open the question of just how much uranium would be solubilized.

To summarize, solubilization of a significant fraction of the pre-ablation uranium into the process water proves that ablation processing results in chemical changes to a portion of the uranium ore. Because there has been scant research on this issue, the department should require further data prior to making its regulatory determination, or alternatively, should make its determination based on the fact that ablation causes geochemical reactions due to the presence of oxygen and carbonates in the process water.

Comment No. 8 - Lab test results submitted by Black Range do not necessarily support the argument that secular equilibrium is preserved in the post-ablation material.

Secular equilibrium occurs when undisturbed uranium-238 decays at the same rate as the products in its decay chain. This condition indicates that the uranium has not been separated from its decay products. In contrast, milling and in-situ leaching disrupt secular equilibrium by chemically separating uranium from its decay products.

Black Range submitted lab test results to the department and has pointed to these results to support its argument that ablation is not source material processing because secular equilibrium is preserved in the post-ablation concentrate.

The separation of uranium from its decay products is not a requirement or test for licensing under Colorado regulations, which only require the production of byproduct material.

Black Range argues that the lab test results show that "within uncertainty of measurement and potential geochemical effects in situ, approximate equilibrium is demonstrated".

If secular equilibrium exists, the specific activity of each nuclide in the decay chain should be roughly equal. However, the lab sheet for the post-ablation concentrate shows that the material is actually in disequilibrium with respect to the U-238 decay chain:

U-238	938 pCi/g
U-234	830 pCi/g
Th-230	1,610 pCi/g
Ra-226	1,200 pCi/g
Pb-210	809 pCi/g
Po-210	215 pCi/g

The lower activities of the uranium isotopes compared with the nuclides Th-230 and Ra-226 could indicate that a portion of the uranium was solubilized during the ablation process.

Regarding the pre-ablation run-of-mine ore, Black Range failed to test the specific activity of the uranium isotopes. Instead, it simply offered a calculation based on the amount of uranium in the ore. The problem with this methodology is that a comparable calculation for the post-ablation concentrate resulted in a specific activity for U-238 that does not match the lab results (938 pCi/g versus 1514 pCi/g), indicating some problem at the lab with the determination of the uranium mass concentration and/or the uranium isotope activity.

The testing done on the pre-ablation ore showed the following specific activities:

U-238	(not tested)
U-234	(not tested)
Th-230	363 pCi/g
Ra-226	250 pCi/g
Pb-210	231 pCi/g
Po-210	33 pCi/g

Neither sample, pre-ablation nor post-ablation, is in secular equilibrium. And the fact that uranium isotopes in the pre-ablation sample were not tested makes it problematic to directly compare the pre- and post-ablation samples. The disequilibrium in the four nuclides tested in the pre-ablation sample could be due to various processes. It appears that the disequilibrium among the four nuclides was transferred to the post-ablation material, somewhat supporting the Black Range argument.

Lab results from tests run on the post-ablation concentrate measuring the specific activity of U-238 and U-235 diverge from expected results by a factor of 0.6 for U-238 and 6.2 for U-235:

Post-Ablation Minus 400 Mesh Screened Ablated Concentrate
Expected vs. Reported Uranium Isotope Activity (U-238 & U-235)

Isotope	Weight %	Activity in 1 g Unat (Bq)	Activity in 1 g Unat (pCi)	Activity in 1 mg Unat (pCi)	Expected Activity in 1 g Post-AMT Minus 400 Mesh Screened Concentrate (pCi)[1]	Activity in 1 g Post-AMT Minus 400 Mesh Screened Concentrate per BLR Lab Report (pCi)[2]	Difference Between Expected Activity and Activity Reported by BLR (factor)
U-238	99.275%	12,356	333,946	334	1,533	938	0.61
U-235	0.711%	568	15,351	15	70	432	6.17

[1]Based on 4,590 mg/kg Unat in Post-AMT Minus 400 Mesh Screened Concentrate per BLR Attachment 3.0, Table 1.
[2]Inter-Mountain Labs Sample Analysis Report, page 7. Precision: U-238 +/-244 pCi/g, U-235 +/-113 pCi/g.

Black Range failed to acknowledge this discrepancy, which would appear to indicate issues at the lab and with Black Range's review of the lab results.

Conclusion

The department should require a uranium milling license for ablation facilities pursuant to Part 18 and Part 3, or alternatively, should commence a robust public stakeholder and rulemaking process with the goal of developing new licensing rules for this emerging uranium processing technology.

Respectfully submitted,

/James B. Woodward/
James B. Woodward
Coordinating Committee Member

INFORM

Information Network for
Responsible Mining

PO Box 27
NORWOOD, CO 81423

(970) 859-7456
jennifer@informcolorado.org
www.informcolorado.org

July 22, 2016

Ms. Jennifer Opila
Radiation Program Manager
Colorado Department of Public Health and Environment
4300 Cherry Creek Drive South
Denver, CO 80260
Via email to jennifer.opila@state.co.us

Re: Comments on Colorado Department of Public Health and Environment Review of Radiation Regulations for Uranium Ablation

Dear Ms. Opila,

Thank you for the opportunity to submit comments on the Colorado Department of Public Health and Environment's stakeholders' process to review the regulation of uranium ablation technology. The Information Network for Responsible Mining (INFORM) is a Colorado-based citizens organization that advocates for responsible hardrock mining practices and protection of affected communities and the environment. INFORM incorporates by reference comments filed by Paul Robinson of Southwest Resource and Information Center, Uranium Watch, and Tallahassee Area Community, Inc., which thoroughly discuss and describe the shared concerns and opinions of INFORM on these matters. These comments as submitted are public record under the Colorado Open Records Act and as such we request that they be made publicly available by posting them on the Colorado Department of Public Health and Environment (CDPHE) ablation web page.

How the experimental ablation processing technology will be regulated is a critically important question for Coloradans because multiple mine sites across the state over the past five years have been suggested as possible locations for future ablation activities. CDPHE should consider opening additional public comment periods as more information becomes available that is relevant to this review. In particular, CDPHE requested a legal opinion and position from the U.S. Nuclear Regulatory Commission (NRC) in correspondence dated June 20, 2016, that addresses this point. Because Colorado's Agreement State status requires compliance with NRC regulations and the Atomic Energy Act, NRC's position on the regulatory requirements of ablation processing will be highly relevant to the current discussion. INFORM reserves the right

to make additional comments once an NRC response to the June 20 letter is made available. The current stakeholders' review process would more fully serve the public by providing ample opportunity for review and comment in progressive stages as information becomes available and various stakeholders provide responses.

CDPHE has asked for public comments and opinions regarding the appropriate framework for licensing sites and facilities that would utilize ablation technology in the future and how Colorado's radiation regulations should be applied. Ablation is a technology that concentrates uranium and creates byproduct waste material that requires a mill license. CDPHE should require ablation facilities to obtain specific source material milling licenses under the authority of the Colorado Radiation Control Act, 6 CCR 1007-1, Part 18, Section 18.3. The Part 18 regulations are clearly applicable to the ablation processing technology and provide an open public process and environmental review, financial protections and decommissioning standards, and measures to ensure that the waste products from uranium concentration are properly handled and disposed of in a manner that is protective of public health and the environment. These principles are highly valued by Coloradans when it comes to oversight of uranium facilities.

Any determination by CDPHE that ablation does not require a specific source material milling license or falls into a new regulatory category or any licensing process other than Part 18 will need to undergo a noticing and rulemaking process under the Administrative Procedures Act prior to a formal decision. Without that, a decision by CDPHE to require different licensing or none at all would amount to a de facto rulemaking. It is therefore quite fortunate and convenient that the appropriate rules at Part 18 are already on the books and are ready to roll out for future ablation proposals in Colorado.

Perhaps the most important aspect of Part 18 licensing requirements are those components that enable the public's ability to participate in a comprehensive and informed decision-making process. These questions of how citizens can participate in public meetings, how they may challenge licensee submittals, how they may review and access information, and how they can invoke rights to adjudicatory proceedings and appeal have undergone significant conversation in uranium-affected communities in Colorado in recent years. It is well established that Coloradans expect and demand robust environmental and health reviews along with ample and just public participation opportunities when it comes to licensing uranium facilities. No other regulatory framework provides these guarantees to the public, which, apart from the clarity of the law itself, is the most compelling reason of all to require Part 18 licensing.

It is also fortunate and convenient that there is already a regulatory framework in place to address the dual jurisdiction of CDPHE and the Colorado Division of Reclamation, Mining and Safety (DRMS) over licensed uranium facilities that also require mining permits. Much has been made by the proponents of ablation technology over their desire to be regulated by only one state agency -- DRMS -- and relieved of all licensing obligations from CDPHE. But this ignores the already established framework for regulating in situ uranium mines wherein CDPHE has responsibility for the oversight of radioactive materials and issues Part 18 licenses for these facilities while DRMS has responsibility for protecting groundwater quality and ensuring adequate reclamation of mine surface areas. There is ample precedent in the way that Colorado

oversees in situ uranium mining to understand that an extraction technology that concentrates uranium at a mine site resolutely and firmly requires regulation from both state agencies.

Ablation is, in fact, a concentration technology. According to the white paper and additional information submitted by the proponent Black Range Minerals (BRM), the ablation technology concentrates uranium by passing a uranium slurry through opposing nozzles and creating an impact zone where a majority of the valuable mineral content is concentrated into a small fraction of the original mass of material. This ablation concentrate is then separated from waste sands and dewatered, thereby creating liquid and solid byproduct waste streams. The ablation concentrate then requires additional finishing through mill circuits to be processed into yellowcake.

In Colorado, a specific source material milling license is required for facilities that create byproduct material. "Byproduct material" is defined as the "tailings or waste produced by the extraction or concentration of uranium or thorium from any ore processed primarily for its source material content" in Part 18, Section 18.2. "Source material" is defined in Part 1, Section 1.2 as uranium or thorium, or any combination, in any physical or chemical form, including ores that contain by weight 0.05 percent or more of uranium or thorium or any combination thereof.

Licenses for source material milling under Part 18 require complete application materials that provide adequate information to review the environmental and health impacts of those facilities. In the case of ablation processing proposals, CDPHE should continue to require complete application materials and an environment report from applicants that provide baseline studies and characterizations of the site and hydrology, detailed plans and designs for proposed operations, characterization of the waste materials and detailed plans for handling and disposal, demonstrated water rights, final reclamation plans, emergency management and response plans, a transportation and haulage analysis, a description of how radioactive materials will be handled and how ore will be handled and stored, and an evaluation of the public and occupational health impacts. In addition, CDPHE should conduct an independent environmental impact analysis and require sufficient financial sureties and guarantees to protect the public interest.

In contrast to the assertions made in the BRM white paper that ablation is simply a technological innovation of the historic mining practice of "high-grading" ore, the ablation process resembles much more closely the initial stage of milling. Far from a grizzled prospector highgrading ore by separating rocks into buckets, ablation can be better described as the technological innovation of traditional milling techniques in which the first stage is to combine ore with water to form slurry and then grind it into fine particles. At the White Mesa Mill near Blanding, Utah, for example, the first stage of milling is to run the ore through a SAG mill, or semi-autonomous grinding. During this process, uranium ore, water and steel balls are tumbled against each other in a rotating chamber. The power of impact, assisted by gravity, crushes the ore.

It is well established that grinding and crushing of ore into small particles is the initial first stage of the milling process. According to the BRM white paper, the initial crushing of uranium ore in order to prepare the slurry for ablation reduces the particle diameter to approximately one-quarter inch. After the ore is reduced to this size, it is then subjected to the high-impact ablation process. In a Technical Resource Document on uranium produced by the U.S. Environmental

Protection Agency (EPA) in 1995, the first stage of milling is identified specifically as the crushing and grinding of ore and is thoroughly discussed. "The initial step in conventional milling involves crushing, grinding, and wet and/or dry classification of the crude ore to produce uniformly sized particles. A primary crusher, such as a jaw type, is used to reduce ore into particles less than 150 millimeters (about 6 inches) in diameter. Generally, crushing continues using a cone crusher and an internal sizing screen until the ore has a diameter less than 19 mm (3/4 inch)." [See discussion at pp. 17-20 in the Technical Resource Document on the Extraction and Beneficiation of Ores and Minerals, Volume 5 Uranium, January 1995, online at https://archive.epa.gov/epawaste/nonhaz/industrial/special/web/pdf/uranium.pdf.]

Furthermore, NRC provides guidance for the implementation of 10 CFR Part 40 that addresses this question as well by describing the activities that are considered as altering the chemical or physical form of the source material and thus requiring a source material license: "Any activity which changes the size or composition of the material containing the uranium or thorium would be considered as altering its chemical or physical form. This would include activities such as grinding or cutting the material…" [See discussions at pp. 4-5 and p. 10 in NRC Implementation Guidance for 10 CFR Part 40 online at http://www.nrc.gov/docs/ML1305/ML13051A824.pdf.]

The BRM white paper indicates that uranium ore will be crushed to much smaller sizes than is typical for the earliest processing stage identified by EPA, lending support to the legal basis for defining ablation as a milling process. However, the creation of fine particles and their management also underscore an imperative need for the type of oversight that mill licensing is intended to provide in order to protect the public from the wide dispersion of the most dangerous of mill wastes – the fine-sized particles that find easy pathways of exposure to people and the environment. It is the historic mismanagement of fine tailings particles through the decades that led to the devastating levels of contamination and human health hazards created by the legacy of uranium mining and milling in Colorado. This is why we needed to establish strong regulations in the first place and why sufficient oversight and regulation of such processes remains so critical now.

As presented by Black Range Minerals and its consultants in the white paper and submitted attachments, there is insufficient information to determine the real-world results and impacts of ablation processing. Inadequate data and limited sampling results are provided by BRM which prevent an unclouded understanding of how contaminated the liquid and solid byproduct wastes will be. Likewise, a complete understanding of the radiological characteristics of the wate sands and the ablated concentrate is still lacking from this discussion and the proponent has failed to even identify a final outcome for the disposal of byproduct wastes. Significantly more study and analysis of the ablation process will be necessary before the state will have adequate information to review a site-specific application that sufficiently protects public health and the environment. Because it will be a long time before the final implications of deploying this untested and experimental technology will truly be known, it is even more important that any forthcoming applications for ablation receive the full review and public vetting that are only possible under Part 18 regulations.

Thank you again for the opportunity to comment and for your time and consideration of the concerns raised here in addition to the incorporated comments of Southwest Resource and Information Center, Uranium Watch and Tallahassee Area Community, Inc.

Sincerely,

Jennifer Thurston
Director
INFORM

Uranium Watch

P.O. Box 344
Moab, Utah 84532
435-260-8384

July 22, 2016

via electronic mail

Jennifer Opila
Radiation Program Manager
Colorado Department of Public Health and Environment
4300 Cherry Creek South Drive
Denver, CO 80260
jennifer.opila@state.co.us

Re: Comments on Colorado Department of Public Health and Environment Regulation of Ablation Uranium Processing

Dear Ms. Opila,

Below please find comment on the Colorado Department of Public Health and Environment (CDPHE), Hazardous Materials and Waste Management Division Radiation Management Program, Regulation of Impact Ablation Uranium Processing (Ablation) submitted on behalf of Uranium Watch and Living Rivers. Commenters have an interest in the regulation of Ablation, in part, because of the proponents plan of processing the Ablation product at the White Mesa Mill in San Juan County, Utah, and because ablation technology could be used to process uranium ore in Utah, which has several permitted mines and older mine sites with stockpiles of ore.

Commenters incorporate by reference comments submitted by the Information Network for Responsible Mining (INFORM) and report by Paul Robinson, Southwest Resource and Information Center (SRIC). Commenters also reference the questions asked by the NRC in the 2013 and 2015 letters to the CDPHE regarding Ablation. These questions and answers, or lack or answers, by Black Range Minerals, Inc. are relevant to the consideration of Ablation Mineral Processing.

1. INTRODUCTION

1.1. The CDPHE has requested public comments regarding the regulatory framework that will be applied to a proposed type of mineral processing, termed Ablation, that upgrades, or concentrates, the uranium content of uranium ore after the ore has been removed from the ground by conventional uranium mining methods, either open pit or underground mining. The request for public input is prompted by a request by Black Range Minerals, Inc. (BRM), a wholly owned subsidiary of Western Uranium Corporation (WUC), Toronto, Canada.[1]

1.2. The CDPHE has identified possible options for a regulatory program that must meet the requirements of the Atomic Energy Act (AEA), Nuclear Regulatory Commission (NRC) regulations (10 C.F.R. Part 40), Environmental Protection Agency (EPA) standards, and State of Colorado Rules and Regulations Pertaining to Radiation Control. The CDPHE identified possible regulatory options:

No radioactive materials license
General radioactive materials license for the possession of source material involved in mining operations
Specific radioactive materials license for source material
Part 18 radioactive materials license for Uranium processing (not milling)
Source material milling radioactive material license
New regulatory category

1.3. As will be shown below, the Ablation process is a uranium milling process. That is, the waste produced by the Ablation process meets the AEA, NRC, EPA, and State of Colorado definition of 11e.(2) byproduct material. Ablation processing must be regulated as a uranium milling operation, subject to all applicable statutes, regulations, and requirements.

1.4. Unfortunately, the CDPHE has not stated the full scope and nature of the review process. The CDPHE has not stated the legal and factual elements that will be taken into consideration. Therefore, Commenters are at a disadvantage. Mainly, Commenters can only address the statements, however misleading, made by BRM.

1.5. The CDPHE should have, but did not, provide a list of all relevant federal and state statutes and regulations that they would be relying upon to make a decision regarding the regulation of Ablation mineral processing technology.

1.6. The CDPHE does, in fact, have all of the relevant statutes and regulations required to make their own determination, as the regulatory agency, regarding the regulation of

---

[1] http://www.sedar.com/DisplayProfile.do?lang=EN&issuerType=03&issuerNo=00026200

Ablation mineral processing technology, but has chosen not to assume that responsibility at this time.

2. CDPHE JUNE 20, 2016, LETTER TO NRC

2.1. On June 20, 2016, the Radiation Program Manager, Hazardous Materials and Waste Management Division, CDPHE, sent a letter to Stephen Poy, Agreement State Programs Branch of the NRC. That letter, which requested legal opinions, should also have been addressed to the NRC Office of General Counsel. That letter was made available on the CDPHE webpage for Ablation Process. However, other CDPHE letters and NRC responses related to the regulation of Ablation and the BRM White Paper and subsequent submittals were not posted on the webpage by the CDPHE.

2.2. The CDPHE should post all correspondence between the agency and the NRC regarding Ablation uranium processing. Specifically, the September 23, 2015, letter from the NRC requesting that BRM provide specific additional information about the Ablation process. The CDPH should have indicated where and how BRM responded to the NRC questions in their responses to CDPHE requests for additional information. The 2015 NRC letter refers to a December 12, 2013. The 2015 NRC letter states: "As discussed in our previous correspondence on this issue, it appears that a source material license would be required for the use of ablation on uranium ore." Such a statement by the NRC is relevant to the Regulation of Ablation Uranium Processing under consideration by the CDPHE and the public.

2.3. The June 20 CDPHE letter should have been sent to the NRC and the response received from the NRC prior to the CDPHE Notice requesting comments on the Regulation of Impact Ablation Uranium Processing. The CDPHE regulations must conform to NRC regulations, therefore, the NRC responses should have informed the CDPHE Notice and proposed regulatory alternatives. The NRC response certainly should have been available to the public prior to the commencement of the comment period.

2.4. The June 20 CDPHE letter is not just a letter requesting NRC's opinions on the regulation of Ablation. The letter clearly is an attempt by the CDPHE to get NRC support for WUC/BRM position that Ablation technology is not uranium milling and does not have to be regulated at such. It is an inquiry based on CDPHE desire to figure out how to circumvent NRC regulations and requirements. It demonstrates a clear bias on the part of the CDPHE regarding the definition of the wastes produced by the Ablation technology at a time when there is minimal information on the radiological and non-radiological constituents of that waste.

Further, the CDPHE shows a clear bias by stating that "we believe that any new regulations proposed in Colorado specifically to address uranium ablation are likely to fall within the NRC's Category D (Program Elements Not Required for Compatibility)." The CDPHE seems to forget that they cannot establish new regulations that are contrary to existing NRC statutes and regulations, and that any regulatory program for Ablation

must be compatible with current applicable definitions and regulations. The CDPHE cannot circumvent these requirements by asserting that Ablation regulation is a program element that does not require compatibility.

2.5. The June 20 letter states that "to the best of our understanding, commercial-scale uranium ablation activities are being proposed solely in the State of Colorado at this time.

WUC has made it clear that they would like to see Ablation used to process stockpiled uranium ore that remains at some inactive uranium mines or that will be mined in the future. WUC contemplates mobile processing units that can be set up at any mine site. It is unclear what type of regulatory program WUC contemplates at sites where mining no longer occurs and the underground mines are not accessible.

WUC has not mentioned the location of these stockpiles, but WUC and the CDPHE are aware that there are stockpiles of uranium ore at permitted and non-permitted locations in other states, including Utah. There are permitted mines and potential new mines in many states.

Further, Anfield Resources Inc., the owner of the Shootaring Canyon Mill, Garfield County, Utah, and uranium mines and claims in Utah, is considering the possibility of using Ablation to concentrate uranium ore at their Velvet-Wood project, San Juan County, Utah.

The June 5, 2015, Velvet-Wood Uranium Project Technical Report[2] states (pages 8 and 49) with respect "Mine Design and Feasibility":

> The following actions are recommended relative to mine design and feasibility (Refer to Table 26.2):
>
> • Conduct preliminary metallurgical testing on available core and/or collect additional core samples including:
>
> o Evaluation of upgrading the mined material on-site by mechanical means including sizing and screening, attrition scrubbing, and/or **ablation**. [Emphasis added.]
>
> ***
>
> • Investigate licensing requirements for on-site upgrading including licensing as an amendment to the Shootering Canyon mill license Budget: US$50,000.

The June 15, 2016, Velvet Wood Preliminary Economic Assessment[3] again addresses Ablation, but with *new insight* as to the regulatory requirements:

---

[2] Velvet-Wood Uranium Project Technical Report, Mineral Resources Amended and Restated National Instrument 43-101; San Juan county, Utah, USA. BRS Engineering Inc. June 5, 2015 http://www.sedar.com/DisplayProfile.do?lang=EN&issuerType=03&issuerNo=00005934

[3] Velvet-Wood Mine Uranium Project, Preliminary Economic Assessment, National Instrument 43-101; Utah, BRS Inc. and T. P. McNulty and Associates Inc. June 15, 2016. http://www.sedar.com/DisplayProfile.do?lang=EN&issuerType=03&issuerNo=00005934

> The segregation of mined material by grade at mine sites has long been an industry practice. More recent refinement in the segregation methods from the visual and manual segregation at the excavation face to newer technologies such as ablation or radiometric mechanical mineralized material sorting have little regulatory precedent and have either been un-tried at operational scale in uranium industrial applications to date (e.g., **ablation)** or have not been practiced in the U.S. uranium mining industry for decades (e.g., radiometric sorting). **The current view is that this segregation and concentration of mineralized material at the mine is part of the mining process and not subject to RML requirements. Management of wastes associated with these processes is still subject to State requirements** (e.g., UPDES, Groundwater Protection Permit, management of treatment waste solids, air emissions, etc.). **However, some permitting risk remains until regulation of this process is more firmly established with the regulatory agencies.** [Emphasis added.]

Clearly, Ablation mineral processing is contemplated by WUC and others in states other than Colorado. Each operation would have its own unique characteristics and would require detailed review and consideration by local, state, and federal regulators.

2.6. The public should be provided an opportunity to comment on the NRC reply to the June 20 CDPHE inquiry.

2.7. Additionally, the NRC should have an opportunity to review the various comments that have been received by the CDPHE regarding the Regulation of Ablation Uranium Processing prior to responding to the June 20 inquiry.

3. ABLATION IS A MILLING PROCESS

3.1. Applicable Definitions and Regulations

3.1.1. The AEA, as amended by the Uranium Mill Tailings Radiation Control Act of 1978 (UMTRCA; Public Law 95-604, November 8, 1978),[4] at Title 1, contains some relevant definitions related to the Title I Remedial Action Program for the remediation of uranium mill tailings and mill sites that were no longer operating as of 1978:[5]

> Section (6) The term "processing site" means–
> (A) any site, including the mill, containing residual radioactive materials at which all or substantially all of the uranium was produced for sale to any Federal agency prior to January 1, 1971 under a contract with

---

[4] http://www.nrc.gov/docs/ML1327/ML13274A489.pdf#page=507

[5] 42 U.S.C. Section 7911 to 7925.

any Federal agency, except in the case of a site at or near Slick Rock, Colorado, unless–

(i) such site was owned or controlled as of January 1, 1978, or is thereafter owned or controlled by any Federal agency, or

(ii) a license (issued by the Commission or its predecessor agency under the Atomic Energy Act of 1954 or by a State as permitted under section 274 of such Act) for the production at such site of any uranium or thorium product derived from ores is in effect on January 1, 1978, or is issued or renewed after such date; and

***

(7) The term "residual radioactive material" means–

(A) waste (which the Secretary determines to be radioactive) in the form of tailings resulting from the processing of ores for the extraction of uranium and other valuable constituents of the ores;

***

(8) The term "tailings" means the remaining portion of a metal- bearing ore after some or all of such metal, such as uranium, has been extracted.

3.1.2. The AEA, Section 11,[6] contains definitions for the regulation of uranium mills and uranium milling that were licensed and active as of 1978 or after:

Section 11e.(2): The term "byproduct material" means–

***

(2) the tailings or wastes produced by the extraction or concentration of uranium or thorium from any ore processed primarily for its source material content;

***

Section 11z.: The term "source material" means (1) uranium, thorium, or any other material which is determined by the Commission pursuant to the provisions of section 61 to be source material; or (2) ores containing one or more of the foregoing materials, in such concentration as the Commission may by regulation determine from time to time.

3.1.3. NRC defines “source material” at 10 C.F.R § 40.4:

(1) Uranium or thorium, or any combination thereof, in any physical or chemical form or (2) ores which contain by weight one-twentieth of one percent (0.05%) or more of: (i) Uranium, (ii) thorium or (iii) any combination thereof. Source material does not include special nuclear material.

3.1.4. NRC defines “unrefined and unprocessed ore” at 10 C.F.R 40.4:

---

[6] 42 U.S.C. Section 2014.

> "*Unrefined and unprocessed ore* means ore in its natural form prior to any processing, such as grinding, roasting or beneficiating, or refining. Processing does not include sieving or encapsulation of ore or preparation of samples for laboratory analysis.[7]

3.1.5. Specifically, there is an NRC regulation that provides exemptions from licensing requirements for "unimportant quantities of source material," if certain conditions are met. The relevant section at 10 C.F.R. § 40.13(b) states:

> § 40.13 Unimportant quantities of source material.
> ***
> (b) Any person is exempt from the regulations in this part and from the requirements for a license set forth in section 62 of the act to the extent that such person receives, possesses, uses, or transfers **unrefined and unprocessed ore containing source material; provided, that, except as authorized in a specific license, such person shall not refine or process such ore.**[8] [Emphasis added.]

This NRC and State of Colorado regulation clearly requires a specific license, under the Atomic Energy Act, to refine or process unrefined and unprocessed ore.

3.1.6. The Judicial Administration, Department of Justice, regulations applicable to Claims Under the Radiation Exposure Compensation Act, Eligibility Criteria for Claims by Ore Transporters, contains relevant definitions.

These definitions apply to uranium mining and milling operations that produced ore for the federal government's atomic weapons program. The definitions apply to the individuals who worked in uranium mines and mills (ore their families) and are seeking compensation for the damage to their health and well being (including death) caused by such work.

> 28 C.F.R. 79.61 - Definitions.
> ***
> Uranium mill means any milling operation involving the processing of uranium ore or vanadium-uranium ore, including carbonate plants and acid leach plants. The term applies to ore-buying stations where ore was weighed and sampled prior to delivery to a mill for processing; **"upgrader" or "concentrator" facilities located at the mill or at a remote location where uranium or vanadium-uranium ore was processed prior to delivery to a mill;** and pilot plants where uranium ore

---

[7] *See* Colorado Rules and Regulations (CCR) Pertaining to Radiation Control at 6 CCR 1007-1 Section 1.2.2.

[8] *See* 6 CCR 1007-1 Section 3.2.2.

> or vanadium-uranium ore was processed. [Emphasis added.]
> ***
>
> Uranium mine means any underground excavation, including "dog holes," as well as open-pit, strip, rim, surface, or other aboveground mines, where uranium ore or vanadium-uranium ore was mined or otherwise extracted.

3.2. Ablation: Upgrading or Concentrating Uranium

3.2.1. Black Range Minerals, the company that has plans to use the Ablation process has provided the CDPHE and the public with a number of documents that describe the Ablation process. Commenters will review those submittals in more detail, below.

The purpose of the Ablation process, which would take place at a uranium mine or location where uranium ore has been stockpiled, is to separate the uranium from the sandstone particles in the ore after the ore has been removed from its place in nature by a mining process. Ablation increases the percentage of uranium contained in the final product that will be shipped to a licensed uranium mill for further processing.

The type of processing described by BRM is a process historically referred to as upgrading, or concentrating. A facility that upgrades or concentrates the uranium is referred to as an "upgrader" or "concentrator."

The process described by BRM in their submittals is a process that greatly increased the amount of uranium in the final product (BRM hopes for 90% recovery in the final product) and leaves solid and liquid waste products that must be disposed of.

3.2.2. An Upgrader, similar in many ways to the proposed Ablation process, is described in Patent US 3062458 A.[9] The Patent was filed September 9, 1957, granted, and published November 6, 1962. Some of the objects of the invention sound pretty familiar:

> An object of this invention is to provide means for mechanically extracting minerals from the ore gangue without the aid of chemical leaching.
>
> Another object of the present invention is to provide an ore upgrader for mechanically abrading mineral deposits adhered to the surfaces of ore granules so as to free the mineral deposits for separation from the gangue.
>
> Another object of this invention is to provide an apparatus for subjecting ore granules to ballistic interaction so as to abrade minerals deposited on the surfaces of these granules to thereby free the minerals from the granules.

---

[9] http://www.google.com/patents/US3062458. *See* Exhibit A.

Ablation is not a new process, but a variation on an old process used to upgrade uranium ore. The only difference appears to be the use of water in the BRM process.

3.3. Historical Uranium Upgraders, or Concentrators

3.3.1. Under Title I of UMTRCA, the US Department of Energy (DOE) remediated 22 inactive uranium-ore processing sites under the Uranium Mill Tailings Remedial Action Project in accordance with standards promulgated by the EPA at 40 C.F.R. Part 192. At least 3 of the uranium mills remediated under Title I were upgraders. The concentrated uranium product produced by these upgraders was shipped to licensed uranium mills for further processing. The upgrading operations were licensed by the AEC, and were remediated under a program specifically designed by Congress for remediation of inactive and abandoned uranium mills and mill tailings. The DOE was not authorized to remediate any uranium mines under UMTRCA, only uranium mills and mill tailings.

3.3.2. Upgrader Sites Remediated Under Title I of UMTRCA.

3.3.2.1. DOE information regarding Slick Rock, Colorado, site:[10]

> Union Carbide's mill at Slick Rock West began operation in 1957 using a uranium-vanadium upgrading technique to process ore mined from the surrounding area. The upgraded material was shipped to the Union Carbide mill at Rifle, Colorado, for further processing. The Slick Rock West mill closed in 1961. Milling operations at the at the Slick Rock West mill also created radioactive tailings. In 1995, about 671,000 cubic yards of these contaminated materials were relocated to the Slick Rock disposal site.

3.3.2.2. DOE information regarding Green River, Utah, site:[11]

> The Green River disposal site is about 0.5 mile east of the Green River and 1.5 miles southeast of the city of Green River, Utah. The site consists of an engineered disposal cell and surrounding property where a former uranium mill and tailings pile were located.
>
> Union Carbide Corporation constructed the uranium mill in 1957 and operated the facility from March 1958 through January 1961.
>
> The mill operated as an upgrading facility for uranium ore. During its 3 years of operation, the mill processed 183,000 tons of ore and

---

[10] Slick Rock, Colorado Processing Site Fact Sheet. http://www.lm.doe.gov/Slick_Rock/Processing/Documents.aspx

[11] Green River, Utah, Disposal Sites Fact Sheet. http://www.lm.doe.gov/Green_River/Documents.aspx

> generated an estimated 114,000 cubic yards of radioactive tailings, a predominantly sandy material, that covered about 9 acres to an average depth of 7 feet.
>
> 3.3.2.3. DOE information regarding Spook, Wyoming, site:[12]
>
> The Spook disposal site is a former uranium-ore upgrading facility in Converse County, Wyoming, about 32 miles north of Glenrock. The site is located on approximately 13.5 acres, surrounded by large, privately owned sheep and cattle ranches. Wyoming Mining and Milling Company operated the facility from 1962 until 1965 to upgrade uranium ore to a concentrated slurry precipitate before shipment to the Western Nuclear mill at Jeffrey City, Wyoming. The upgrading operations created process-related waste and radioactive mill tailings, a predominantly sandy material.

3.3.3. In sum, historically, uranium upgraders were licensed as uranium milling operations. The upgrading operation produced wastes and tailings that were, under Title I, defined as "residual radioactive material."[13] These upgrading sites and tailings were remediated under the AEA provisions for the remediation of inactive uranium mills under Title I of UMTRCA.

3.4. Department of Justice Definitions

The Department of Justice definitions pertaining to compensation of uranium workers (or their families) that suffered from adverse health impacts, including death, clearly state that uranium upgraders and concentrators—such as the ones at Spook, Green River, and Slick Rock—were milling operations. The definition of milling includes: "upgrader" or "concentrator" facilities located at the mill or at a remote location where uranium or vanadium-uranium ore was processed prior to delivery to a mill. The uranium extraction process described by BRM is a process to concentrate the uranium prior to further processing at a mill. It is a process to upgrade the percentage of uranium in the material that will be shipped to the mill. The historic upgrading processes produced tailings—the same kind of tailings produced by the Ablation concentration, or upgrading, process.

---

[12] Spook, Wyoming, Disposal Site. http://www.lm.doe.gov/spook/Documents.aspx#fs

[13] The term "residual radioactive material" means – (A) waste (which the Secretary determines to be radioactive) in the form of tailings resulting from the processing of ores for the extraction of uranium and other valuable constituents of the ores. . . .

3.5. NRC Definition of Ore Crushing

The information provided by BRM on the Ablation process describes a process that commences with the crushing of the uranium ore. In a July 13, 1977, internal NRC legal memo,[14] signed by an attorney with the Office of Executive Legal Director (ODLD), the NRC clearly states that the crushing of ore meets the definition of "processing." The OELD memo states:

> 10 CFR 40.13(b) exempts from licensing unrefined and unprocessed ore (excepting export). 10 CFR 40.4(k) defines "unrefined and unprocessed ore" as ore in its natural form prior to any processing, such as grinding, roasting or beneficating,[15] or refining. "Processing" in this definition includes both physical and chemical procedures that alter the ore from the condition it was in just after removal from its place of deposit in nature.

The OELD memo makes clear that the exemption from licensing that applies to the transportation and handling of unprocessed ore, applies to "ore whose gross appearance and chemical state has not been altered from the point of mining."

The memo provides a justification for that finding, based on health and safety considerations. The memo states: "The assumption is that any processing or refining may alter the radiological environment associated with the source material enough so that the health and safety of workers and others is a matter of legitimate regulatory concern." The memo concludes that "crushing of ore is obviously a form of processing subject to licensing by definition in 10 CFR 40.4(k)."

The CDPHE need go no further in examining the question of whether Ablation processing is uranium milling and subject to licensing by definition.

4. BRM WHITE PAPER

4.1. BRM submitted the July 2015 White Paper: Description of Ablation Mining Technology Applied to Uranium Deposits, to the CDPHE, Radiation Control Division - Uranium Program. The White Paper was prepared by Black Range Minerals Colorado, LLC, and Thompson & Pugsley, LLC.

In that White Paper, BRM refers to Ablation by the term "Ablation Mining Technology" (AMT) in order to preempt any decision by the CDPHE regarding the nature of the process. In the White Paper BRM asserts that Ablation is a mining process,

---

[14] https://www.colorado.gov/pacific/sites/default/files/HM_rad-ablation-HPPOS%20184-1977-NRC-fonnerltrcrushing.pdf

[15] Definition of "benefication": "In the mining industry beneficiation or benefication in extractive metallurgy, is any process which removes the gangue minerals from ore to produce a higher grade product (concentrate), and a waste stream (tailings). Some beneficiation processes are froth flotation and gravity separation."
https://en.wikipedia.org/wiki/Beneficiation

not a milling process. If you call it "Ablation Mining Technology," it's gotta be mining technology.

4.2. Comments on the BRM White Paper

4.2.1. The process described by BRM in the White Paper is clearly a process that is applied to unrefined and unprocessed uranium ore after the ore has been removed from is place in nature. It is a process that alters the gross appearance and chemical state of the ore. It is a process that concentrates the uranium and produces processing wastes and tailings that must be properly handled and disposed of due to their radiological and non-radiological contents. The handling and disposal of the processing waste and tailings falls under the provisions of NRC regulation at 10 C.F.R. Part 40, particularly Appendix A, and applicable CDPHE regulations that must conform to the NRC regulations.

4.2.2. The White Paper (page 1) claims that the tailings are "clean sands" and can be disposed of by "mine backfilling." However, placing the solid wastes from the Ablation process would not meet the NRC, EPA, and CDPHE requirements for the permanent disposal and isolation of uranium mill tailings—also known as 11e.(2) byproduct material.

4.2.3. The White Paper (page 2) claims "ATM does not meet the regulatory definition of source material processing or for uranium milling due to its substantial similarity to previously accepted mining techniques[,] such as blasting and 'high-grading' ore at mine sites."

The White Paper does not describe techniques such as as blasting and 'high-grading' ore, nor compare those techniques with the Ablation process techniques.

Blasting is used to loosen the ore from the orebody so that it can be removed from its place in nature. High-grading is a process of physically separating higher grade or from lower grade ore. Neither process involves using large amounts of water, produces a processing waste streams, or produces an end product that contains 95% (as claimed by BRM) of the original uranium content of the ore, nor produces tailings that contain 5% of the original uranium content of the ore.

The White Paper does not state "the regulatory definition of source material processing."

The issue here is that Ablation is used to process uranium ore, after its removal from its place in nature, for its uranium content and produces a waste that meets the definition of 11e.(2) byproduct material. The Ablation process, actually, need not take place at the uranium mine. Although, BRM proposes to use the process at the Sunday Mine in an underground chamber, the process could take place at the surface or at another location. Mining processes take place at mines and are used to remove the ore from the host rock. Milling processes are used to separate the valuable mineral from the other materials in the ore.

4.2.4. The White Paper claims that the waste produced from Ablation is "waste rock." Usually the "waste rock" from a uranium mine is the rock removed from the mine

in order to reach the uranium ore. It can be removed from the surface in the case of open-pit mines, or from the underground mine workings. The waste rock is removed to enable access to the valuable ore. Waste rock is supposed to contain little, if any, uranium. Mine waste rock is not rock that has been processed to create a sand-like waste material, such as produced by the Ablation process.

4.2.5. The White Paper (page 13) states that if a uranium processing facility (that is, a mill) were to take delivery of only fine-grained AMT ore, it will have a smaller surface foot print. This is, BRM explains, because the crushing and grinding circuits will not be required at the mill site. The required crushing and grinding will not take place at the mill site, but at the mine site. In other words, the first part of the milling process (crushing and grinding) will take place at the mine site. However, the transfer of the crushing and grinding processes from the mill to the mine site does not alter the fact that crushing and grinding the ore are milling processes, not mining processes.

4.2.6. The White Paper (pages 14 to 30) contains a lengthy discussion of the AEA and the regulation of ore and source material. The discussion (page 17) states:

> Therefore, based on these well-understood statutory provisions and regulatory interpretations, *source material* in uranium *ore* at a uranium *mill* is subject to AEC/NRC jurisdiction, while *source material* in an unrefined and unprocessed uranium *ore* at or by a uranium *mine* or during transport from a mine to an uranium *mill* prior to *processing* is not subject to AEC/NRC jurisdiction, regardless of its *source material* concentration percentage.

Commenters do not disagree with that conclusion. However, Commenters assert that the Ablation constitutes processing of uranium ore for its "source material" content and that the processes used (i.e., crushing, grinding, concentration, and upgrading the uranium content of the material) constitute milling, not mining. Ablation takes unrefined and unprocessed ore, processes or refines that ore, and creates a product and a waste stream, neither of which can be considered "unrefined and unprocessed ore."

NRC and CDPHE regulation states that any person who receives, possesses, uses, or transfers unrefined and unprocessed ore containing source material cannot refine or process that ore except as authorized in a specific license. That means a license under the Atomic Energy Act.[16]

4.2.7. The White Paper's discussion of "source material processing" (page 21) implies that there are current operations where ore is processed for the removal of uranium or thorium, but that ore is not processed primarily for such purposes. In other words, the uranium is a secondary stream. The White Paper does not identify these operations or discuss why they are relevant. In addition to secondary stream uranium recovery, there are other mineral recovery operations, such as rare earth recovery, that

---

[16] 10 C.F.R. § 40.13(b) and 6 CCR 1007-1 Section 3.2.2.

produce waste streams where the uranium content of the waste exceeds 0.05% uranium. These operations must have a site specific source material license.

4.2.8. The White Paper's discussion of "source material processing" (pages 21 to 22) gets confused, because it believes that Ablation processing is not a process undertaken to extract or concentrate uranium from ore primarily for its uranium content. BRM has made clear that the purpose of Ablation is to extract, or concentrate, uranium and for no other purpose. Therefore, any discussion of the processing of uranium ore for any other purpose is irrelevant. The provisions related to general or specific source material licenses are also irrelevant. These regulations are not applicable to the processing of uranium ore (by such means as grinding, roasting or beneficating, or refining) primarily for its source material content.

4.2.9. The White Paper (page 22) draws the conclusion: "The critical conclusion is that the pre-AMT crushing and post-AMT screening constitutes "processing" (not "milling") that does not and should not implicate NRC AEA jurisdiction given the limited potential health and safety concerns for miners handling the moist, AMT high-grade ore."

This conclusion is absurd and is not supported by the 1977 OELD determination, the AEA, and applicable regulations.

The Ablation process is not a just a sorting process, it is a process that results in both physical and chemical changes in the ore. The application of water under high pressure creates chemical changes in the ore. The breaking down of the ore into small particles exposes the surfaces of the particles, allowing for the release of radon and radon progeny into the air during the ablation process. BRM has not submitted any documentation comparing, with detailed specificity, the chemical composition of the ore prior to Ablation with the chemical composition of the concentrated product after Ablation, notwithstanding the recent posting on the CDPHE Ablation webpage of an analysis of pre- and post-Ablation materials. Whether or not the changes are chemical in addition to being physical is irrelevant. The complex Ablation process is a still a milling process.

As discussed in Section 2.5, above, unrefined and unprocessed ore is "ore in its natural form prior to any processing, such as grinding, roasting or beneficating, or refining." "'Processing'" in this (10 C.F.R. 40.4(k)) definition includes both physical and chemical procedures that alter the ore from the condition it was in just after removal from its place of deposit in nature." Beneficating is defined as "any process which removes the gangue minerals from ore to produce a higher grade product (concentrate), and a waste stream (tailings)."

The Ablation process upgrades the uranium content of the ore, producing a concentrate. The definition of 11e.(2) byproduct material clearly states that it is the tailings or wastes produced by the extraction **or concentration** of uranium or thorium from any ore processed primarily for its source material content.

4.2.10. The White Paper claims, "AMT is not an activity conducted primarily for recovery of source material content from an ore; but rather, it is an activity designed to sort ore for the purpose of sending such sorted ore to a uranium mill for actual

'processing' or 'milling.'" This is a rather convoluted conclusion. Clearly, the primary purpose of the Ablation process is to concentrate the uranium. Similar types of upgrading processes were conducted at licensed uranium recovery operations under the AEA, and three of those sites and the resulting tailings were remediated under Title I of UMTRCA, an amendment to the AEA.

A process similar to the Ablation process described by BRM was patented as an upgrader in 1962. On September 16, 2015, WUC acquired BRM, which included a 100% interest in a 25-year license for Ablation and related patents from Ablation Technologies, LLC. According to WUC, the Ablation intellectual property is worth $9,488,051.[17]

It is doubtful that the type of ore sorting or blasting that occurs during mining at conventional mines is patented, licensed by a private entity, involves valuable intellectual property, or subject to other legal restrictions or requirements. Nor does ore sorting or blasting involve the complex equipment and processes described by BRM for Ablation.

BRM is using a new term, "disassociated," in order to confer a new definition on the processing to obfuscate the regulatory definitions and reality of the Ablation process itself.

4.2.11. The Ablation process that is described by BRM in subsequent submittals describes a complex process that includes a crusher, hopper, mix tank, ablation tanks, conveyors, orival water filters, centrifuges, filter presses, sack filling station, and truck loading.

4.2.12. The White Paper claims that there are no health and safety concerns and, by inference, environmental concerns associated with the Ablation process. There is no basis for this claim. The production of a waste water stream and tailings, which must be handled and disposed of, creates health, safety, and environmental concerns and potential adverse impacts. Some of these will be discussed below.

4.3. Handling of the Waste Water:

4.3.1. The White Paper (page 11) discusses the handling of excess water from the Ablation process:

> If however, at a particular mine site, it becomes necessary to dispose of excess water, it is considered it will be both economically beneficial as well as environmentally preferable to treat the water to recovery any uranium and remove any other potential constituents of concern (COC) that may be present in solution prior to disposal. Suitable commercial-scale water treatment systems are readily available.

Here, the White Paper misses a few very important points. First, if BRM were to

---

[17] http://www.sedar.com/GetFile.do?lang=EN&docClass=5&issuerNo=00026200&issuerType=03&projectNo=02490562&docId=3929505

treat the waste water for the removal of the uranium for economic benefit and/or to meet regulatory standards for discharge, that would require a source material license. Usually, uranium is removed from mine water using ion exchange (IX) columns. This operation requires a source material license under the Atomic Energy Act from the NRC or NRC Agreement State.

4.3.2. There is some question regarding how EPA regulation at 40 C.F.R. § 440.30 to 400.35 will apply to the discharge of waste water, depending on whether Ablation is a mining or milling process. Mine water cannot be discharged unless the uranium, radium, and some other chemicals and constituents are removed prior to discharge. Compliance with the discharge standards in this regulation is not just a necessity, it is a legal requirement. In addition to a National Pollution Discharge Elimination System (NPDES) permit or state equivalent, if required, the site would also be required to have a Ground Water Discharge Permit and install monitoring wells.

5. BRM RESPONSES TO CDPHE REQUEST FOR ADDITIONAL INFORMATION

5.1. On April 4, 2016, BRM provided the CDPHE, Hazardous Materials and Waste Management Division, with additional information in response to the Division's August 13, 2015, Request for Information. The responses were in the form of several Attachments.

5.2. Attachment 1.1, Ablation Process Worker Exposure and Dose Assessment, March 16, 2016.

5.2.1. Attachment 1 lists several references at the end. However, many of those references are not readily available to the public. The same is true for the references in the other attachments.

5.2.2. All of the assumptions that make up the estimates of worker exposure and dose assessment are, just that, assumptions. These assumptions and the modeling were made on behalf of BRM by their contractor. These assumptions, evaluations, and estimates have not been developed by a independent entity or a regulatory agency.

The health and safety of the workers will fall under Mine Safety and Health Administration (MSHA) regulations, whether or not the operation is considered mining or milling. If the operation is determined to be milling, the health and safety of the workers will also fall under the authority of the CDPHE and the AEA.

The methodology used to determine worker exposure must be a methodology that has been approved by MSHA and, where applicable, the NRC and CDPHE. The licensee, or permittee, is not the entity that determines the methodology used to determine worker exposure. Any methodology used to determine the radioactive and non-radioactive emissions, worker exposure, compliance with federal and state regulations must be based on actual measurements, not on models and speculation. There must be an approved scientific methodology and regulatory basis for worker exposure

and dose assessment.

5.2.3. Section 3, Considerations of Potential for Radon and Progeny Exposure to Workers, claims that the EPA has previously assumed zero radon emissions from ponded areas of uranium tailings impoundments (and other liquid effluent ponds or impoundments). BRM references a 1986 EPA background documents developed in conjunction with the promulgation of 40 C.F.R. Part 61 Subpart W. More recently, the EPA developed additional methods for determining the radon emissions from liquid effluents in conjunction with a new Subpart W Rulemaking.[18]

The EPA has developed a formula for determining the radon emissions from liquid effluents, based on the radium content of the solutions and site-specific meteorological data.[19]

Meteorological data is used, because the disturbance of the liquid effluents by wind and wave action increases the radon emissions. The EPA is still in the process of reviewing public comments on the draft Subpart W rule, and the final rule is expected to be released later in 2016. The final rule should clarify some of the issues surrounding the question of radon emissions from radium-laden liquid effluents. Until that time, the CDPHE and BRM cannot assume that the radon emissions from uranium and radium bearing effluents are, in fact, zero or minimal.

5.2.4. The regulation of radon emissions from the underground chamber, and exposure of workers to radon and radon progeny, and ventilation and worker protection adequacy falls under MSHA authority, NRC authority, and EPA authority, pursuant to 40 C.F.R. Part 61, Subparts A and W.

5.2.5. The description of the conditions in underground uranium mines in Canada is irrelevant.

5.2.6. BRM makes several commitments regarding air quality monitoring and monitoring of worker exposure. Those commitments are meaningless unless they are enforced by MSHA. It is likely that MSHA would have to investigate the radiological and chemical emissions and worker exposure associated with the Ablation process and make specific determinations regarding the regulations that apply or need for new regulations.

5.2.7. BRM does not provide information regarding the waste water treatment system and the associated radiological and non-radiological emissions and worker exposure and dose assessment. The waste-water treatment system would include pipe

---

[18] https://www.epa.gov/radiation/subpart-w-rulemaking-activity

[19] Risk Assessment Revision for 40 CFR Part 61 Subpart W — Radon Emissions from Operating Mill Tailings (Task 5 - Radon Emissions from Evaporation Ponds. Cohen and Associates. November 9, 2010.
https://www.epa.gov/sites/production/files/2015-05/documents/riskassessmentrevision.pdf

lines, settling and holding ponds, barium chloride treatment system to remove radium, possible IX column to remove uranium, evaporation ponds, and eventual discharge.

5.2.8. BRM proposes to use the Ablation process at permitted uranium mines, where the process would occur either above or below ground, and at sites with stockpiled or abandoned uranium ore that are not currently permitted. BRM does not provide any assessment of the differences in those kinds of Ablation operations and how they would affect worker health and safety.

5.3. Attachment 1.2, Estimates of Public Exposure and Risk from Application of Ablation Mining in the Sunday Mine.

5.3.1. The Estimates of Public Exposure and Risk from Application of Ablation Mining in the Sunday Mine references the 40 C.F.R. Part 61 Subpart B Annual Compliance Reports.[20]

The owner of the Sunday Mine Complex (Sections 10, 11, 13 through 15, and 22 through 16, Township 44 North, Range 18 West, San Miguel County, Colorado) is required to submit annual reports to demonstrate compliance with the Subpart B standard for radon exposure to the nearest receptors.

BRM references the submittal of annual reports for 2008, 2010, and 2011. BRM fails to mention the annual reports for the earlier years that the Sunday Mine Complex operated, between 1990 and 2007. Also, BRM fails to reference the annual report for 2007.

5.3.2. Uranium Watch submitted a Freedom of Information Act (FOIA) request to Region 8 of the EPA for any and all Annual Subpart B Reports for the Sunday Mines Complex. The EPA responded with reports for 2007 and 2010. The EPA, apparently, has mislaid the reports for 2008 and 2009 and any reports submitted in earlier years. Therefore, it would be helpful for BRM to submit all Sunday Mines Complex Annual Subpart B Reports to the CDPHE so that they may be made publicly available.

5.3.3. Attachment 1.2 (Section 1) discusses historical data on public exposure from the operation of the Sunday Mine Complex. This data must be disregarded for the following reasons:

5.3.3.1. The previous mine owner, Denison Mines (USA) Corp., did not use the methodology for measuring the radon that was approved by the EPA. A mine owner is required to use the Method-6 monitoring device, unless they received specific permission to use another method.[21]

The annual reports for 2007 states: "Denison used Method A-7, Radon-222-Alpha Track Detectors, to analyze Radon-222 and used commercially available, alpha track Rn-22 detectors to continuously collect Rn-222 emissions on a monthly basis for October, November, and December of 2007." A mine owner is required to use Method

---

[20] 51 Fed. Reg. 51654 (December 15, 1989).

[21] 40 C.F.R. Part 61, Appendix B, Method 114, Section 3.1.7.

A-6, Radon-222—Continuous Gas Monitor, unless they received specific approval by the EPA.[22]

Denison Mines did not request authorization to use Method A-7 in place of Method A-7 at the Sunday Mine Complex. Therefore, the data on the dose to the nearest recipient is unreliable because the method used to determine the radon emissions did not meet the regulatory requirements.

There is no basis for the assertion that the radon dose to the nearest receptors from the operation of the Sunday Mine Complex and the Ablation system will be less than 10 millirems per year. The dose cannot be known until the the mine and Ablation process have been in operation for at least a year and reported to the EPA.

5.3.3.2. The meteorological data (direction, frequency, and speed), used in the computer model to determine the dose to the nearest receptors, came from the Grand Junction Airport, 50 miles from the Sunday Mines. The mine owner failed to install meteorological monitoring equipment to determine the actual wind direction, frequency, and speed. Therefore, there is no evidence that the meteorologic data from Grand Junction was, in fact, similar to the actual meteorological conditions at the Sunday Mines.

5.3.3. The information on the radon emissions and dose to the public makes no mention of the radon emissions from the waste rock and liquid effluents and whatever water treatment system is installed. There is no assessment of the radon emissions from the fine sand waste stream (tailings) produced by the Ablation process.

5.3.4. The information on the radon emissions and dose to the public does from the Sunday Mine Complex, however flawed, in only relevant to that mine complex. It is not applicable to other sites, where the Ablation process will occur above ground, or at mines that are not required to comply with the Subpart B radon emissions standard, such at sites where active mining no longer takes place, and the site owner seeks to process low-grade ore or waste rock.

5.3.5. BRM fails to discuss the regulations protective of public health if Ablation is considered to be a milling process.

---

[22] Method 114, Section 3.1.7, Method A-7, Radon-222-Alpha Track Detectors.

Principle: Radon-222 is measured directly in the effluent stream using alpha track detectors (ATD). The alpha particles emitted by radon-222 and its decay products strike a small plastic strip and produce submicron damage tracks. The plastic strip is placed in a caustic solution that accentuates the damage tracks which are counted using a microscope or automatic counting system. The number of tracks per unit area is correlated to the radon concentration in air using a conversion factor derived from data generated in a radon calibration facility.

Applicability: Prior approval from EPA is required for use of this method. This method is only applicable to effluent streams which do not contain significant quantities of radon-220, unless special detectors are used to discriminate against radon-220. This method may be used only when ATDs have been demonstrated to produce data comparable to data obtained with Method A-6. Such data should be submitted to EPA when requesting approval for the use of this method. EPA 520/1-89-009(24).

5.4. Attachment 1.3. Comparison of Worker and Public Doses from Conventional Uranium Mining and Milling in North America.

5.4.1. Much of the information in Attachment 1.3 is not relevant to whether Ablation is a milling or mining process.

5.4.2. Attachment 1.3 (page 17) discusses the La Sal Uranium Mine Complex. The owner of the La Sal Mines Complex (Pandora, Snowball, Beaver Shaft, and La Sal Mines) was for many years the same owner as the Sunday Mines Complex. As documented in the Annual Subpart B Compliance Reports, Method A-7 was also used to monitor the radon emissions from the portals and radon vents. And, as with the Sunday Mine Complex, Method A-7 was used without EPA approval. The EPA issued a 2010 Notice of Violation[23] for this and other violations related to compliance with Subpart B. Therefore, the data regarding the radon emissions from the La Sal Mines Complex is unreliable. EPA Region 8 has yet to approve the use of Method A-7 for the La Sal Mines Complex, which has been on standby since 2013.

5.4.3. Attachment 1.3 (page 24) does have a relevant discussion of Ablation:

> In other words, all that the ablation process will do is decrease the mass of the radiologically barren portions of the host rock and hence increase the "uranium grade" of the ore, including the radioactivity associated with all of natural uranium's progeny at the expected equilibrium concentrations.

Here, BRM acknowledges that the purpose of Ablation is to increase the "uranium grade" of the ore; that is, upgrade, or concentrate, the ore. This process produces waste streams. According to the Atomic Energy Act, 11e.(2) byproduct material is the waste produces from the extraction or **concentration** of any ore for its uranium or thorium content.

5.4.4. Attachment 1.3 (page 24) claims that the presence of the uranium progeny in the Ablation product, because the uranium is concentrated, not removed, is relevant to the definition of 11e.(2) byproduct material:

> In addition to maximizing the calculated radiological exposure rates associated with the process, there is a regulatory consideration that is noted. The uranium ("source material") is not separated from its progeny by the ablation process. It therefore appears from a scientific perspective, that 11.e. (2) byproduct material (e.g., "tailings" as defined in Section 11.e (2) of the US Atomic Energy Act) is not produced.
>
> Accordingly, use of ablation technology does not appear to be" uranium milling." With the use of water and a high velocity impact,

[23] http://www.uraniumwatch.org/lasalmines.ut/epa_lasalmines_NOV.100817.pdf

> the ore grade is enhanced by a physical separation process. The activity ratios of uranium to its progeny (degree of equilibrium) is not altered by the process, and the full equilibrium condition remains as it occurs in nature in both the ablated slurry product and the low level, resultant concentrations of uranium and progeny in the "waste rock" that is returned to the mine.

Here, BRM asserts that, because the uranium progeny remains in the Ablation product and is not separated into the waste, then that waste could not possibly be considered 11e.(2) byproduct material. However, the definition of 11e.(2) byproduct material does not require that the processing remove the uranium progeny. That would not be expected when the uranium ore is concentrated. The definition of 11e.(2) byproduct material is not a radiological definition, but a regulatory definition. That regulatory definition makes no mention of the radiological content of the tailings or the status of radiological equilibrium. In fact, in conventional mills, sometimes thorium (thorium 232) and the thorium 232 progeny stays in the tailings and is not removed. Tailings at the White Mesa Mill contain source material thorium and its progeny.

4.4.5. Attachment 1.3 (page 13, section 6.4 (2), states:

> The Ablation slurry product will "save" 15 - 20+ mSv (several thousand millirem) collective dose to workers per year at a conventional mill. This is as a direct result of the significant reduction in material handling requirements, i.e., the several thousands of tons per day of uranium ore (rock) that needs to be crushed and sorted by ore handlers to feed the mill vs. the relatively small volume of "ablation paste" that can be fed to the mill via automated processes.

Crushing the ore at the mine will not do anything to protect worker health; it just transfers the impacts from the mill to the mine where the ore is processed via Ablation. Transferring the crushing process to the mine, does not magically make crushing a mining process, instead of a milling process. The benefit to the workers of crushing the ore at the mine site, rather than the mill site, is questionable.

The tailings produced at the mill after the crushing and other physical and chemical processes is regulated under the AEA and federal and state uranium milling regulations and reclamation standards. The waste must remain in perpetual care after mill closure. However, equally hazardous wastes from the Ablation process will be under minimal care, with no specific federal reclamation standards, if BRM has its way.

5.5. Attachment 1.4. Assumptions And Bases for Worker And Public Dose Assessments.

5.5.1. BRM claims that radionuclide secular equilibrium is maintained throughout the Ablation process and, therefore, is not radiologically the same as 11e.(2) byproduct material. However, there is no radiological definition associated with the definition of 11e.(2) byproduct material. Since that definition includes wastes from the

"concentration" of uranium, naturally, the definition assumes that the progeny in that concentrated product might be in secular equilibrium, since the uranium and uranium progeny are concentrated. That is why the process is called "concentration."

5.6. Attachment 2.1. Detailed Description of the Location and Setting of the AMT Unit.

5.6.1. BRM discusses the location of the Sunday Mine Complex (Carnation, St. Jude, Topaz, Sunday, and West Sunday Mines) and states that the mine complex is currently permitted with the Colorado Division of Reclamation, Mining and Safety. BRM fails to mention the permitting by the BLM, the need to submit a Plan of Operations Amendment, and the need for an environmental analysis of the operation of the mine and the operation of the Ablation unit, under the National Environmental Policy Act (NEPA). Currently, the mine is not allowed to operate by the BLM, pending the submittal of additional data and information, and additional NEPA review.

5.6.2. Attachment 2.1 fails to describe the setting of an AMT unit on the surface of a operational uranium mine, or the setting at a non-operational mine in order to process low-grade ore or waste rock at mines that are currently non-operational.

5.6.3. The submittal states: "It is understood that, upon determination of AMT regulation, [Piñon Ridge Mining, LLC] PRM will be required to submit technical revisions for each DRMS permit prior to beginning any AMT operations." This statement is misleading, because if fails to mention any changes to the Plan of Operations that must be provided to the BLM. Currently, the Sunday Mine Complex is not authorized to operate under BLM regulations. The BLM must complete an EA, which requires certain information from PRM. PRM has yet to provide that information. PRM would have to submit a Plan of Operations Amendment seeking BLM authorization to used Ablation, whether or not Ablation is determined to be a mining or milling process. The BLM approval process involves a NEPA review.

5.6.4. The CDPHE must consider all possible sites for Ablation processing, not just the Sunday Mine Complex. It must include Ablation conducted on the surface and Ablation conducted at sites that no longer have a mining permit and where ore has been left on-site (but no new mining will occur). BRM has the idea that they can take a mobile Ablation unit around to different mine sites, and just "start her up." However, BRM or another entity would have to have claims, leases, or other right to enter the property and conduct operations. There would have to be rights to a source of adequate water. On BLM land, Ablation would require a Plan of Operations. It would require a reclamation plan and reclamation bond. The reclamation plan would need to assure safe disposal of any waste if the waste is considered waste rock and any waste water. If Ablation is considered to be milling, authorization to operate would require a source material license and proper disposal of the waste streams as 11e.(2) byproduct material.

5.6.5. This BRM submittal does not provide the necessary information regarding the handling of waste rock and liquid wastes after processing and how the handling and

disposal of those products fit into the various site plans. BRM intends to dispose of the waste rock from the Sunday Mine Complex by mine backfilling. What about the disposition of waste rock at sites where there is no mine to backfill. Where will that material be disposed of?

5.7. Attachment 2.2, Detailed Description of the Pre and Post AMT Materials.

4.7.1. If the ore before Ablation processing contains .25% uranium, with a recovery rate of 85% to 90%, the waste stream contains 0.0375% uranium to 0.0175 % uranium. At a recovery rate of 80%, the resulting waste contains 0.05% uranium. Higher grades or ore, at 85% to 90% recovery would also result in a waste stream of 0.05% or greater. Therefore, the waste stream could reach concentrations of uranium that require regulation as source material. That is, unless the waste stream is considered to be 11e.(2) byproduct material.

5.8. Attachment 2.3, Detailed description of the ATM Process.

5.8.1. Attachment 2.3 (page 2) mentions the physical characteristics of the ore prior to processing, described as cementation, grain size, mineralogy, etc. Elsewhere, BRM has claimed that the Ablation process does not change the physical characteristics of the ore. However, from all the various description of the Ablation process, the cementation, grain size, and mineralogy are significantly altered by Ablation. The grain size is altered during crushing, cementation is broken, the mineralogy is altered, and other changes occur, producing three separate products or wastes with physical and chemical characteristics that are different from the ore after it was removed from its place in nature, but prior to processing by Ablation.

5.8.2. In addition to alteration of the physical characteristics, the chemical characteristics will be altered by exposure to the oxygenated water and the chemicals contained in the mine water used in the Ablation process. The chemical characteristics will be changed due to exposure to air during the grinding and crushing of the ore, which creates more surface area for chemical reactions and release of radon gas. The radon gas quickly decays into highly radioactive particles. The radon progeny may be released into the air and attach to dust particles or dissolved in the slurry or waste product or waste water. All these physical and chemical processes result in products that have different physical and chemical characteristics than the original ore.

5.8.3. Attachment 2.3 (page 4) states that Ablation product is anticipated to be of a uranium grade of approximately 1.0% uranium. That product, which is the result of processing of ore for its source material content, is no longer ore. It is source material in concentrations (above 0.05%), which requires regulation, unless the whole operation is regulated as a uranium recovery operation.

5.9. Attachment 2.4, Water in the AMT Operation.

5.9.1. Attachment 2.4 provides a report on the Water Supply and Quality at the Sunday Mines Complex in Support of CDPHE Information Request (Report). The Report does not provide any information regarding the sources of water for Ablation processing at other uranium mine locations.

5.9.2. The Report mentions treatment of wastewater, but fails to discuss the federal regulations that could apply to the treatment of the wastewater prior to discharge. There is no mention of the methods used to treat uranium mine or Ablation process waste water to remove radium and uranium. There is no mention of the fact that the use of an IX column to remove uranium would require a source material license from the NRC or NRC Agreement State. Whether or not the mine water is used for Ablation, if it were to be pumped from the mine and discharged off-site, it would require treatment prior to discharge to meet the standards at 40 C.F.R. § 440.34. That treatment system could not be placed underground.

5.9.3. The Report's discussion of the handling of the mine water before, during, and after Ablation, indicates that there are technical and physical challenges. The handling of the waste water could include holding and evaporation ponds and a treatment system to removed solids, uranium, radium, and other possible chemical contaminants.

5.9.4. As discussed above at Section 4.8.2, the mine water and ablation products undergo chemical changes. The Report (page 6) discussion of "mineral solubility" describes complex processes due to the composition of the mine water from the Sunday Mine Complex that will be used in the Ablation process. At this time, there are still questions regarding the amount of uranium that can be dissolved by the mine water during Ablation processing. It is possible that less uranium than anticipated can be removed from the ore during Ablation, leaving a waste product with a higher uranium concentration.

BRM never discussed any of the changes in the process that would result from the use of processing water that already contains various levels of uranium and radium, as expected when untreated mine-water is used for Ablation.

5.9..5. The Report makes clear the necessity of additional testing of Ablation, its feasibility, and its waste products.

5.10. Attachment 3, Lab Test Results and Discussion.

The information in the Lab Test Results and Discussion only involves the processing of the October Reclamation Stockpile. The results show that the so-called "clean-sand" waste product contains 29.1 pico Curies per gram (pCi/g) of radium 226. BRM expects to dispose of that in some manner. At sites where there is no active mine, it is possible that they plan to place the material on the surface. The amount of radium-226

in the waste rock is above the clean up action for a reclaimed uranium mill[24] and above that cleanup action level recommended by the EPA at uranium mines.[25]

5.11. State Memo on additional information from Black Range Minerals.

5.11.1. According to BRM, based on 20 cycles per day, there will be from 6,750 to 16,350 gallons per working day of waste water to be handled. BRM still does not have a plan for handling this water. According to BRM, they have "not decided whether the waste water will be recycled back to the system, stored in the facility, treated, shipped to other mills, or disposed of in a way that follows applicable regulations." No matter how the Ablation process is regulated, the handling of the waste water is an important aspect of the project. Water would have to be held in tanks and/or holding ponds. BRM mentions applicable regulations, but fails to identify those regulations.

5.11.2. BRM believes that the uranium in the post-ATM water is recoverable. BRM should have provided technical information regarding the recoverability of the uranium and estimated amounts of uranium in the waste water under different scenarios. If BRM uses mine water that already has appreciable amounts of uranium, the resulting uranium content of the waste water may be greater than if clean water was used. The effluent discharge limits applicable to uranium mines and mills are found at 40 C.F.R. §§ 440.30 to 440.35.

However, it is unclear how the discharge would be regulated under those provisions. Section 440.35—applicable to new sources—applies to mine drainage from mines, not the discharge from uranium ore processing effluents. For mills, discharge effluent limitations apply to mills where the annual precipitation exceeds the annual evaporation (which is not the case in the Colorado Plateau.) Therefore, it is unclear if BRM can treat and discharge the Ablation liquid effluents if the Ablation process is a milling process or other source material licensed activity.

If the water were to be discharged under Section 440.34, the effluent limitation for uranium is 4.0 pico Curies per liter (pCi/L) for any one day. The limit of daily values for 30 consecutive days is 2.0 pCi/L. If BRM desires to removed the uranium from the liquid effluents, then the treatment system must have a license under the AEA.

---

[24] 40 C.F.R. Part 192, Section 192.32(b)(2)(i) and (ii): "(i) 5 picocuries per gram (pCi/g), averaged over the first 15 centimeters (cm) below the surface, and
(ii) 15 pCi/g, averaged over 15 cm thick layers more than 15 cm below the surface."

[25] *See Joint Guidance for the Cleanup and Reclamation of Existing Uranium Mining Operations in New Mexico.* Energy, Minerals & Natural Resources Department Mining and Minerals Division, 220 South St. Francis Drive, Santa Fe, NM 87505, and New Mexico Environment Department Mining Environmental Compliance Section, 1190 South St. Francis Drive, Santa Fe, NM 87505. March 2016. http://www.emnrd.state.nm.us/MMD/MARP/documents/March2016JointGuidelinesforExistingMinesandRadiationCleanup.pdf

5.11.3. BRM anticipates "that the radon emission in the waste water storage will be insignificant." The EPA is currently in a rulemaking to amend the uranium mill radon emission standard (40 C.F.R. Part 61 Subpart W). As discussed above at Section 5.2.3, the EPA has been developing site-specific formulas for determining radon emissions from uranium mill liquid effluents, based on their radium content and local meteorological conditions.[26] More information in that regard will be available when the EPA releases the final Subpart W rule.

If the Ablation process is determined to be a milling process under the AEA, the liquid effluents ponds will be subject to Subpart W regulations.

5.12. BRM Ablation Mining Technology Presentation

5.12.1. BRM developed a slide presentation for the May and June CDPHE Stakeholder Meetings. The information regarding worker exposure is irrelevant to the issue of whether or not Ablation processing is a mining or milling process.

5.12.2. Slide 26 provides data on the dose to the nearest receptor from the Sunday Mines Complex. As discussed above at Section 5.3.3.1, this data has no factual basis, because Denison Mines did not use the approved methodology (Method A-6) for measuring the radon emissions from the portals and vents and relied on meteorological data from the Grand Junction Airport, 50 miles away.

5.12.3. BRM claims that the Ablation operation takes place within an existing uranium mine. However, the CDPHE must take into consideration the possible location of an Ablation operation on the surface at an operational uranium mine and at a uranium mine that has ceased operation, as has been proposed by BRM.

Further, the storage of the waste water and any water treatment system would be located above ground.

5.12.4. Slide 31 is entitled, "US Atomic Energy Act and Colorado Regulations for Radiation Control - Definitions." Unfortunately, BRM has purposefully edited those definitions to mislead the public and advance their argument. BRM states that source material is "≥ 0.05 % U and/or Th; any economically viable U ore is this (e.g, walls of the mine). The AEA provides two definitions of "source material": "(1) Uranium or thorium, or any combination thereof, in any physical or chemical form or (2) ores which contain by weight one-twentieth of one percent (0.05%) or more of: (i) Uranium, (ii) thorium or (iii) any combination thereof." So, the uranium and/or thorium contained in any material is defined as "source material." And, ores containing .05% or more of uranium and/or thorium are also defined as "source material."

---

[26] Risk Assessment Revision for 40 CFR Part 61 Subpart W — Radon Emissions from Operating Mill Tailings (Task 5 - Radon Emissions from Evaporation Ponds. Cohen and Associates. November 9, 2010.
https://www.epa.gov/sites/production/files/2015-05/documents/riskassessmentrevision.pdf

5.12.5. BRM (slide 31) misses the concept that any source material (that is not ore), of a certain quantity and that contains above a certain percentage of uranium is an important quantity of source material and must be regulated. The question is, after the processing and handling of the ore by Ablation, after that ore has been removed from its place in nature, are any of the products still defined as "ore"?

5.12.6. BRM (slide 31) leaves out an important aspect of the definition of "byproduct material." BRM defines byproduct material as "the tailings or wastes produced by the extraction of uranium or thorium from any ore processed primarily for its source material content." The AEA definition of 11e.(2) byproduct material states the definition of byproduct material it differently: "the tailings or wastes produced by the extraction **or concentration** of uranium or thorium from any ore processed primarily for its source material content." (Emphasis added.) So, 11e.(2) byproduct material is also produced by the "concentration" of uranium. The Ablation process described by BRM does, in fact, concentrate the uranium and is processed for just that purpose. Did BRM inadvertently leave leave out such an important part of the definition of 11e.(2) byproduct material, or, was such a significant omission egregious and purposeful?

5.12.7. BRM (slide 32) discusses the Regulatory Implications for AMT. BRM states: "Source material remains in AMT ore - has not (yet) been processed to extract the source material content." BRM has not been paying very good attention to the Ablation process they have been describing in the various submittals to the CDPHE. Clearly BRM describes a process whereby uranium is extracted from the ore (after its removal in nature). The uranium-bearing mineralized crust of the ore grains is separated (e.g., extracted) from the sand grains. The process leaves a uranium concentrate and two waste products: so-called "clean sand" and waste water. The definition of 11e.(2) byproduct material includes wastes from **the concentration** of uranium from any ore processed primarily for its source material content.

5.12.8. BRM (slide 32) claims: "Byproduct material not produced since uranium series radionuclides remain in equilibrium with the uranium in the ATM ore and and the source material (uranium) has not been extracted from it." There is nothing in the definition of 11e.(2) byproduct material that states that the waste product cannot be in equilibrium. If the uranium is processed for the "concentration" of the uranium that is what one would expect. Further, the exposure to high-pressure oxygenated water (which dissolves uranium) and the grinding and break down to smaller particles that are exposed to air (resulting in increased radon emissions and removal of radon and radon progeny during Ablation) would change the radiological balance of the original ore.

5.12.9. BRM's conclusion that the "ATM is NOT Milling," has no basis in fact or law.

5.12.10. The BRM (slide 33) discussion of "Radiological Risk Reduction Features" states that surface vents are monitored for radon releases. There is no discussion in the various submittals to the CDPHE regarding the venting of radon from the underground

Ablation processing room or how fresh air brought into the processing area. We do not know if there will be a separate ventilation system for the Ablation room to provide fresh air and vent radon, fans, or other special equipment. These are significant health and safety questions that have been been addressed by BRM.

5.12.11. The discussion of radiological risks (slides 33 and 34) does not provide an assessment of the risks associated with the waste water handling, radon emissions from waste water, transportation and disposition of the "clean-sand." There is no mention of the worker exposure associated with the waste water treatment system, including IX columns and handling of the IX resins. Additionally, there is no mention of what will happen to evaporation ponds holding the waste water when the effluents dry up or are removed.

The waste water ponds will accumulate sediments with uranium, radium, and other radionuclides. The sediments can dry out during and after the Ablation operation. The usual pattern at uranium mines is alternating periods of operation and non-operation. Historically, periods of non-operation exceed those of operation. Therefore, dry radioactive sediments will accumulate and can be dispersed by wind. During those periods of non-operation no one will really pay much attention to dispersal of radioactive sediments, as is happening at the Energy Queen Mine in San Juan County, Utah.

The Sunday Mine has not operated in several years and is isolated, so vandalism has been an issue. Any water treatment systems (such as a building used to process the water with barium chloride to remove the radium) must be locked and behind a locked fence during periods of non-operation. The radium that is removed must not be left on site and must be properly disposed of.

6. OTHER ISSUES AND CONCERNS

6.1. Worker Health and Safety

6.1.1. BRM makes no mention of special training of workers conducting the ablation processing, or MSHA, State of Colorado, or NRC requirements for worker training and certification. It has been a long time since a concentrator has been in operation to recover uranium. Ablation process is fairly new, so it may be necessary for the agencies that regulate worker health and safety at uranium mines and mills to conduct studies to investigate the actual circumstances associated with the Ablation operation and determine training and certification requirements and the relevant health and safety issues. The agencies may need to promulgate new regulations specific to both below-ground and above-ground Ablation uranium recovery operations.

6.1.2. The various BRM discussions of worker health and safety make no mention of the regulation of noise. MSHA pays a great deal of attention to the exposure of workers to noise. Uranium mine operators are regularly cited for violations of noise protection requirements. The Ablation operation described by BRM is probably very loud. In addition, ventilation fans create a great deal of noise, as do back-up diesel generators. Since BRM has never operated a uranium mine, maybe they are not yet aware of the numerous MSHA health and safety regulations they will be required to

comply with, including protection of the worker from high levels of noise.

6.1.3. As discussed above, the venting of radon from the underground Ablation chamber and the provision of fresh air to the chamber was not discussed by BRM.

6.1.4. Any BRM commitments to protect worker health and safety are only as good as the regulatory program to enforce those commitments. If protective measures are not part of MSHA or agency regulations or clearly stated in a permit or license, the regulatory agency is not able to enforce them. Even then, MSHA fines for health and safety violations are usually minimal.

6.2. Other Agencies

6.2.1. Any mining and milling that takes place on BLM, USFS, or DOE lands is also regulated by the individual agencies. Therefore, those agencies would have a say so regarding whether Ablation is a mining or a milling process. The agency that administers the mine site may determine that BRM cannot use the so-called "clean-sand" to backfill the mines. Agencies will make other decisions that would affect the ability of BRM to carry out Ablation on federal lands. Agency decisions require public input and a NEPA process. Therefore, other agencies have the authority to make determinations that will impact the regulation of Ablation at the Sunday Mine Complex and other mine sites.

6.2.2. The BLM in southeast Utah considers both the physical and chemical processing of uranium ore at a mine site to be "mineral processing" and the wastes to be "tailings." The Draft Environmental Assessment for the Daneros Mine Plan Modification states (page 3): "There is no on-site physical or chemical mineral processing at the mines; accordingly, no tailings or mineral processing chemicals are generated or stored on site." [27]

6.2.3. BRM proposes to have a mobile Ablation processing unit so that it can be used to process stockpiled ore at uranium mines that are currently without a permit or Plan of Operations. The processing of the waste rock on federal lands will require ownership of the claims or leases, or authorization to access the site for purpose of Ablation. It would require a permit or licensing process, NEPA process, and public input. It would also require access to the necessary water rights, something that might not be easy in an arid climate. Also, the disposition of waste water and the tailings (or "clean sand") would present issues. It is not as simple as driving around with the Ablation unit and processing the old ore piles. The costs for permitting, operation, reclamation bonds, reclamation, and other regulatory and operational requirements might make such efforts economically unfeasible.

---

[27] Environmental Assessment, Daneros Mine Plan Modification, DOI-BLM-UT-Y020-2016-0001-EA Plan of Operations Modification UTU-74631; Department of Interior, Bureau of Land Management, Monticello Field Office. May 2016.

6.2.4. The NRC and EPA also have authority over uranium milling. These agencies must have a legally defensible position regarding whether Ablation is a uranium milling process.

6.2.5. BRM proposes to transport the uranium concentrate to the White Mesa Uranium Mill, San Juan County, Utah, for further processing. The concentrate will have concentrated amounts of uranium, uranium progeny, and chemical constituents. Therefore, the tailings that will be disposed of at the White Mesa Mill after the uranium is removed will have concentrated amounts of radium and other radiological and non-radiological constituents. If, as BRM suggests, all ore is initially processed at a mine rather than at a mill and only the concentrate is shipped to the mill, the high concentration of radium and other constituents would have even more serious regulatory implications.

If the concentrate is to be processed at the Mill, then it is necessary that the Mill's environmental analysis evaluate the environmental impacts of disposing of highly concentrated tailings in the tailings impoundment.

6.2.6. The highly concentrated tailings would contain a higher percentage of radium, resulting in higher levels of radon emissions. If large amounts of this concentrated tailings were disposed of, it might be difficult for a tailings impoundment(s) at the White Mesa Mill, or other mill, to meet the radon emission standard at 40 C.F.R. Part 61 Subpart W. The CDPHE and/or BRM might argue that the Subpart W radon emission standard does not apply to new tailings impoundments (constructed after December 1989). However, the current regulation and proposed regulation[28] that exempts new tailings impoundments from Subpart W emission standard is in violation of the Clear Air Act. The CAA does not authorize the establishment of a design or work practice standard, in lieu of a numerical emission standard, unless compliance with a numerical standard is not practicable. Since an emission standard has already been established for pre-1990 tailings cells, that would be impossible.

6.2.7. In sum, the processing of the concentrate produced by Ablation uranium recovery at a conventional uranium mill would have health, safety, environmental, and regulatory implications for the White Mesa or other mill.

6.3. Economic Feasibility

6.3.1. The CDPHE is moving forward with these regulatory determinations at tax payer expense, when is it doubtful that BRM or its parent company have the necessary financial resources to carry out uranium mining and Ablation uranium recovery at the Sunday Mine Complex. WUC must file relevant financial documents to Canadian Securities Administrators.[29] The May 27, 2016, Western Uranium Corporation,

---

[28] EPA Subpart W Rulemaking Activity. https://www.epa.gov/radiation/subpart-w-rulemaking-activity

[29] http://www.sedar.com/DisplayCompanyDocuments.do?lang=EN&issuerNo=00026200

Condensed Interim Consolidated Financial Statements for the three Months Ended March 31, 2016 and 2015 (Stated in $USD)[30] states:

> The Company has incurred continuing losses from its operations, and as of March 31, 2016, has an accumulated deficit of $2,179,228. As of March 31, 2016, the Company has a working capital deficit of $2,727,934. Since inception, the Company has met its liquidity requirements principally through the issuance of notes and the sale of its common stock.
>
> The Company's ability to continue its operations and to pay its obligations when they become due is contingent upon the Company obtaining additional financing. Management's plans include seeking to procure additional funds through debt and equity financings and to initiate the processing of ore to generate operating cash flows. [Page F-8.]

Although WUC continues to raise money through debt and equity financing, WUC has a number of financial obligations. WUC claims a desire to initiate the processing of ore, however, WUC does not own or have an interest in any uranium mine that is currently permitted to operate.

WUC has not taken the necessary steps to complete the current EA process for the Sunday Mines Complex, let alone apply for an amended Plan of Operations to authorize Ablation uranium recovery. The BLM plan of operation approval process, which includes a NEPA process and public participation, can take 3-5 years or more. WUC spends money on consulting fees and acquiring more property, rather than actually spending the money to permit and operate uranium mines.

The current global climate for uranium production and the spot and long-term price of uranium is not conducive to the development of new conventional uranium mining operations in the United States.[31] The prices have shown a steady declining trend over the past 5 years.

POSSIBLE REGULATORY OPTIONS

7.1. The CDPHE identified possible regulatory options:

- No radioactive materials license
- General radioactive materials license for the possession of source material involved in mining operations
- Specific radioactive materials license for source material
- Part 18 radioactive materials license for Uranium processing (not milling)
- Source material milling radioactive material license

---

[30] http://www.sedar.com/GetFile.do?lang=EN&docClass=5&issuerNo=00026200&issuerType=03&projectNo=02490562&docId=3929505

[31] https://www.cameco.com/invest/markets/uranium-price

New regulatory category

7.2. The CDPHE should have provided a full explanation of the possible regulatory options, the current regulations applicable to those options, and how the CDPHE would determine which regulatory option was applicable to the Ablation uranium recovery process. CDPHE should have provided links to the current regulations on the Ablation webpage.

7.3. The CDPHE cannot legally justify the options of 1) no radioactive materials license, 2) general radioactive materials license for the possession of source material involved in mining operations, or 3) specific radioactive materials license for source material.

7.4. CDPHE offers the option of a "Part 18 radioactive materials license for Uranium processing (not milling)." CDPHE regulation at 6 CCR 1007-1 Part 18 is entitled Licensing Requirements for Uranium and Thorium Processing. These regulations "establish criteria, terms and conditions upon which the Department issues licenses to receive title to, receive, possess, use, transfer, or deliver source and byproduct materials as defined in this part, to operate uranium and thorium processing facilities and for the disposition of the resulting byproduct material." Section 8.3 provides "Special Requirements for Issuance of Specific Licenses For Source Material Milling." Part 18 does not define "milling." Section 18.5 contains Requirements Pertaining to Materials Not Subject to 18.3 and 18.4. However, there is no explanation as to why such materials would fall under the Part 18 Licensing Requirements for Uranium and Thorium Processing, but not fall under Section 8.3. "Special Requirements for Issuance of Specific Licenses For Source Material Milling." There is no explanation as to why some uranium processing would not be considered to be "milling." Nor is there a list of types of uranium processing that are not "milling."

The CDPHE must explain why Ablation might require a radioactive materials license for "processing," but not a license for "milling."

The CDPHE regulations are vague. They lack the required specificity, causing regulatory confusion, so it is hard to understand what, exactly, is the option that CDPHE is proposing with respect Part 18 (not milling).

It is Commenters' understanding is that the "milling" includes conventional uranium milling and non-conventional methods, such as in situ leach (ISL) and heap leach. So that, any processing for the extraction or concentration of of uranium or thorium from any ore processed primarily for its source material content constitutes "milling," and the wastes produced are defined as 11e.(2) byproduct material and must be regulated as such.

7.5. Another option is a "source material milling radioactive material license." This is the appropriate option, because Ablation uranium recovery process is a milling process. The Ablation process described by BRM takes place after the ore is removed from its place in nature. At that time, the ore could easily be transported to a conventional uranium mill without further processing. However, BRM proposes to process the ore in

order to concentrate, or upgrade, the ore. Such a process, by definition, produces 11e.(2) byproduct material. Therefore, Ablation uranium recovery is a milling process. Since Ablation is a milling process, it requires a Part 18 radioactive materials license, pursuant to Sections 18.4 and 18.5, the AEA, and 10 C.F.R. Part 40 Appendix A.

7.6. According to BRM, source material milling is milling to recovery uranium as a secondary product. Such milling has taken place at operations where the primary purpose of the mining is to recover phosphate, copper, or rare earths. Therefore, the CDPHE should clarify exactly what is meant by "source material milling."

7.7. CDPHE includes a final option of a "new regulatory category." It is unclear what the CDPHE means by a "new regulatory category." Regulatory categories don't just come out of thin air; they must be tied to the AEA and NRC and EPA definitions and regulations. If the CDPHE wanted commenters to take this option seriously, they should have provided additional information about what a new regulatory category might entail, and how that would fit into the current statutory and regulatory framework. Whatever new regulatory category is envisioned, it must come under the provisions of the AEA, NRC, and EPA statutes and regulations applicable to Title II of the Uranium Mill Tailings Radiation Control Act. The regulations and any CDPHE rulemaking must meet the requirements of 42 U.S.C. § 2021(o).

7.8. Research and Development. Since BRM and its parent company, WUC, have been engaged in unauthorized Ablation processing at unlicensed sites for research and development, the CDPHE must make clear the regulatory framework for such research and development processing operations and sites. The research and development includes Ablation processing in Colorado of ores imported from outside of the U.S., for example, the recent import and processing of ore from Africa. Thus far, Colorado is ignoring the potential health and environmental impacts from these operations and the proper disposal of the product and resulting wastes.

CONCLUSION

8.1. BRM/WUC has not provided sufficient data and information about the proposed processing of uranium ore at the Sunday Mine Complex to be able to draw any conclusions regarding the radiological and non-radiological constituents of 1) the unrefined and unprocessed ore prior to Ablation mineral processing, 2) the concentrated ore product, 3) the solid waste product to be disposed of, and 4) the liquid waste product to be disposed of. There is not sufficient information to determine the radiological and non-radiological impacts to public and worker health and safety and to the environment. BRM/WUC has not provided sufficient data and information to be able to determine what aspects of the Ablation operation will be located underground and which will be located above ground. Nor, is there any substantive discussion and presentation of data and information regarding Ablation mineral processing that would occur completely above ground. The documents submitted by BRM/WUC cannot in any manner be considered to

be an “application” to conduct Ablation uranium processing at the Sunday Mine Complex.

8.2. The Ablation process described by BRM extracts and concentrates the uranium from the unrefined and unprocessed ore after it has has been removed from the uranium mine by conventional mining methods. The sole purpose of Ablation is to process the ore for its uranium (i.e., source material) content. Ablation mineral processing produces waste products that, clearly, meet the definition of 11e.(2) byproduct material, because the processing wastes are “tailings or wastes produced by the extraction or concentration of uranium or thorium from any ore processed primarily for its source material content.” Therefore, Ablation must be regulated pursuant to all federal and state regulations applicable to a uranium milling and the production, disposal, and long-term care of 11e.(2) byproduct material.

8.3. Because Ablation mineral processing is a non-conventional form of uranium milling, the CDPHE may want to establish regulations specific to Ablation as a uranium milling operation. However, those regulations must conform to the AEA and current NRC definitions and regulations applicable to uranium milling at 10 C.F.R. Part 40 Appendix A. Further, the proposed regulations must conform to the EPA standards promulgated pursuant to the Uranium Mill Tailings Radiation Control Act of 1978 and the new rules being promulgated by the EPA to amend 40 C.F.R. Part 61 Subpart W.

Any Ablation mineral processing rules must be promulgated pursuant to the AEA at 42 U.S.C. § 2021(o)(3)(b).

8.4. Commenters request that these comments and other comments submitted to the CDPHE regarding Regulation of Ablation Uranium Processing be placed on the CDPHE Ablation webpage as soon as possible.

8.5. Commenters reserve the right to submit new comments upon receipt of new information; for example, the NRC reply to the CDPHE June 20, 2016, letter.

Thank you for providing this opportunity to comment.

Sincerely,

/s/

Sarah Fields
Director
Uranium Watch
sarah@uraniumwatch.org

/s/

John Weisheit
Conservation Director
Living Rivers
P.O. Box 466
Moab, Utah 84532

cc: Stephen Poy, NRC, stephen.poy@nrc.gov
Meg Parish, Colorado Attorney General Office, meg.parish@coag.gov
Enclosure: As stated

Nov. 6, 1962 A. G. DEARING 3,062,458

ORE UPGRADER

Filed Sept. 9, 1957

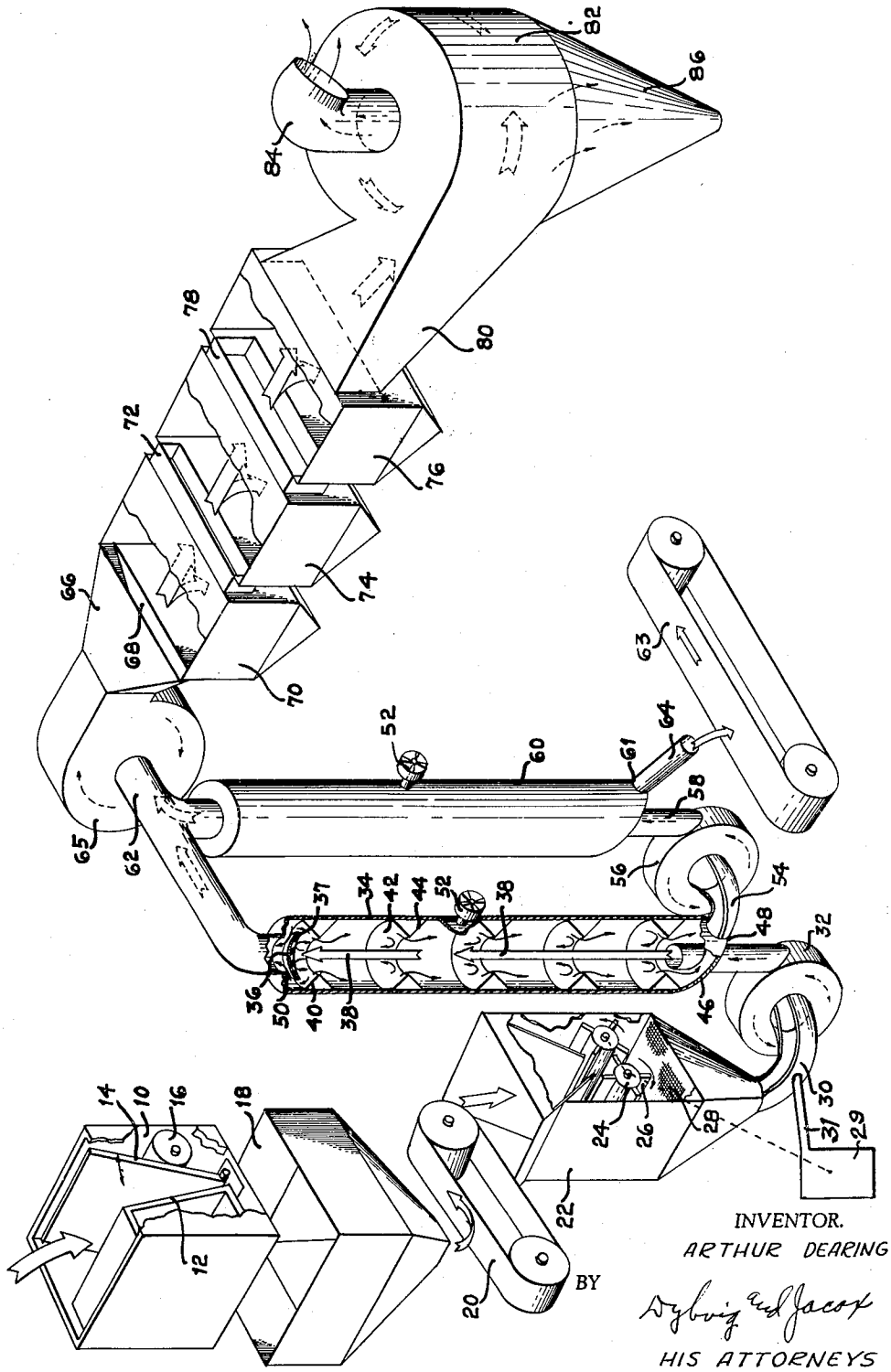

INVENTOR.
ARTHUR DEARING

BY

Dybvig and Jacox

HIS ATTORNEYS

United States Patent Office

3,062,458

Patented Nov. 6, 1962

1

3,062,458
ORE UPGRADER

Arthur G. Dearing, 721 E. Sater St., Greenville, Ohio

Filed Sept. 9, 1957, Ser. No. 682,763
8 Claims. (Cl. 241—19)

This invention relates to an ore upgrader, and more particularly to a mechanical process for extracting minerals, as for example uranium and vanadium, from the gangue making up the body of the ore.

Ores such as those bearing the elements uranium and vanadium, as found in the United States, frequently consist primarily of soft sandstone wherein the minerals are deposited on the surfaces and in the crevices of the siliceous crystals which form the sandstone. One of the chief problems in the successful and economical extraction of uranium and vanadium minerals, as well as other minerals found in such ores, is that of seperating the minerals from the siliceous crystals or sand grains.

An object of this invention is to provide means for mechanically extracting minerals from the ore gangue without the aid of chemical leaching.

Another object of the present invention is to provide an ore upgrader for mechanically abrading mineral deposits adhered to the surfaces of ore granules so as to free the mineral deposits for separation from the gangue.

Another object of this invention is to provide an apparatus for subjecting ore granules to ballistic interaction so as to abrade minerals deposited on the surfaces of these granules to thereby free the minerals from the granules.

Still another object of this invention is to provide an ore upgrading device for separating minerals from granular ore materials, which device subjects the ore materials to ballastic interaction so as to free minerals adhered to the surfaces thereof in the presence of high frequency sound waves.

Still a further object of this invention is to provide, in combination with a mechanical ore upgrading apparatus, means for collecting the concentrated minerals obtained through upgrading of the ore in separate classes according to their specific gravity.

Other objects and advantages reside in the construction of parts, the combination thereof, the method of manufacture and the mode of operation, as will become more apparent from the following description.

In the drawing, the FIGURE is a perspective view with parts broken away illustrating the ore upgrader of this invention.

Referring to the FIGURE in detail, there is illustrated a jaw crusher 10 for receiving raw ore and fracturing the ore into fragments. This jaw crusher is of the conventional type, including inclined jaws 12 and 14, the latter of which is oscillated by means of an eccentric cam 16, cooperating to crush ore flowing downwardly therebetween. The ore is fractured to a sufficiently small size that it may drop through a crevice at the base of the jaw crusher between the jaws 12 and 14. Ordinarily, the jaw crusher is employed to fracture the ore into fragments an inch or smaller in diameter.

The fractured ore drops into a storage bin 18 and flows therefrom onto a conveyor belt 20, which conveys the ore fragments into a hammer mill 22. The hammer mill 22 is of the conventional type, wherein drums 24, supporting blades 26, rotate at high speeds causing the blades to shatter the ore fragments. The blades 26 repeatedly strike and shatter the ore fragments until these fragments are sufficiently small that they drop through a screen 28 at the base of the hammer mill. Generally, the capacity of commercial jaw crushers materially exceeds the capacity of commercial hammer mills. Accordingly, the storage bin 18 is employed to accumulate ore fragments passing from the jaw crusher so that, while the hammer mill operates continuously, the jaw crusher may be operated intermittently.

2

The screen 28 at the base of the hammer mill is provided with a mesh which varies according to the ore being processed. In the case of uranium and vanadium bearing sandstones, the screen preferably has a mesh corresponding to the size of the sand granules. For such ores an 80 mesh screen is used, however, satisfactory results are obtained with screens ranging from 40 to 100 mesh. Preferably, in any ore upgrading operation, the mesh of the screen 28 corresponds to the natural graininess of the ore.

The ore, upon passing through the screen 28, flows by gravity along an open slide 30 into the air intake of a centrifugal blower 32. The slide 30 is open at the top thereof to provide for unrestricted movement of air into the blower 32. The blower 32, which is a high velocity blower, drives air, and the ore fragments from the hammer mill 22 therewith, in a vertically upwardly directed collimated stream passing through a vertically oriented elongate cylindrical tank 34. There may be provided means for introducing hot gases in the blower 32. Where a diesel engine 29, shown schematically, is employed to drive the jaw crusher and the hammer mill, these hot gases may be obtained from the exhaust pipe 31 from the engine 29. The hot gases are employed, when available, primarily to facilitate subsequent chemical treatment of the upgraded ore and are not required for efficient operation of the present apparatus.

Mounted adjacent the top of the tank 34, by means not shown, is an inverted saucer-like baffle 36. The ore fragments rising vertically upwardly through the cylindrical tank 34 impinge upon the baffle 36 rebounding downwardly through the tank. Inasmuch as the ore fragments are highly abrasive and are driven at such a high velocity that they resemble a sandblast, it is preferable that the baffle 36 have a resilient plastic or rubber liner 37 to reduce as much as possible the abrasive wear.

Through the operation of the baffle 36, the ore fragments or granules are redirected or reflected upon themselves such that they will impinge one against the other. As a result, a type of ballistic interaction between the ore fragments is produced within the cylindrical tank 34. Particles which have been deflected out of the main stream of ore fragments, illustrated in the drawing by the broad arrows 38, are deflected back into the central air stream by deflectors 40. A plurality of these deflectors 40 are arranged in vertically spaced relation within the tank. Each of these deflectors 40 comprises an annular ring encircling the central air stream and secured to the wall of the cylindrical tank 34. The deflectors 40 are tapered radially inwardly so as to have a triangular cross section, the upper tapered side 42 of each deflector serving to deflect downwardly moving ore fragments into the upwardly moving air stream, and the lower tapered side 44 of each deflector serving to deflect upwardly moving ore particles into the upwardly moving air stream and continually to collimate the central air stream.

This scattering and deflection of ore fragments will produce abrasion of the surfaces of the tank 34 and deflectors 40. Where this abrasion is severe, these surfaces may be protected, as desired, by a resilient rubber or plastic coating.

The base of the cylindrical tank 34 is truncated, as illustrated at 46, and is provided with an ore outlet 48 at the extreme lowest portion thereof. The truncated portion 46 serves as a slide for guiding ore fragments into the outlet 48. The top of the cylindrical tank 34 above the baffle 36 is provided with a centrally located outlet

50 for the air stream. A siren 52 is mounted at any convenient location in the side of the tank 34 and functions to introduce high frequency sound waves into the tank 34. Preferably, the siren generates sound waves having a frequency exceeding audible frequencies. The siren may be protected from the sandblast by suitable baffles, not shown.

From the foregoing description of the cylindrical tank 34 with its associated baffle and deflectors, it is apparent that the ore fragments being introduced into the tank 34 by means of the high velocity blower 32 will be subjected to repeated ballistic interactions, such that the ore fragments will abrade the minerals deposited on their surfaces from one another. After numerous repeated ballistic interactions, the demineralized ore fragments eventually work their way in a random manner to the base of the tank 34, where, guided by the truncated portion 46, the ore fragments drop through the outlet 48. The minerals, on the other hand, which are extremely small and comparatively lightweight particles, migrate with the air stream around the baffle 36 into the outlet 50 at the top of the tank 34. The high frequency sound waves produced by the siren 52 function to facilitate the mineral separation and further to prevent recombination of the minerals with the ore gangue.

The partially demineralized ore fragments flowing out of the base of the cylindrical tank 34 move downwardly on an open slide 54 into the air intake of a second high velocity blower 56. This blower 56 drives the particles through a conduit 58 into a second cylindrical tank 60 identical to the tank 34. Here the ore particles are subjected once again to repeated ballistic interactions to further remove minerals from the surfaces thereof. The or gangue, further demineralized, drops through an opening 61 in the base of the tank 60 through a conduit 64 onto a conveyor 63 for disposal in the usual manner.

While two ballistic interaction tanks 34 and 60 have been illustrated in the present ore upgrading apparatus, it will be apparent that, depending upon the efficiency with which it is desired to operate the apparatus, a single ballistic interaction tank may be employed or numerous successive ballistic interaction tanks may be employed before the demineralized ore fragments are eventually removed for disposal.

The mineral laden air streams emerging from tops of the tanks 34 and 60 are blended in a conduit 62. The conduit 62 connects with a blower 65. The capacity of the blower 65 in relation to that of the blowers 32 and 56 is such as to maintain an air pressure in the conduit 62 lower than that in each of the tanks 34 and 60. This facilitates removal of mineral particles from the ballistic interaction tanks 34 and 60.

The mineral laden air stream driven by the blower 65 passes through a duct 66 having an outlet 68 communicating with a settling tank 70. A duct 72 connects the settling tank 70 with another settling tank 74. As illustrated, the duct 72 has a cross sectional area exceeding that of the outlet 68 in the duct 66. The settling tank 74 communicates with a third settling tank 76 through a duct 78 having a still larger cross sectional area. From the settling tank 76 of the air stream moves through a duct 80 into a cylindrical centrifuge tank 82. As illustrated, the duct 80 engages the centrifuge tank 82 tangentially so that the air moving through the duct 80 enters the centrifuge tank 82 tangentially. The produces a cyclonic movement of air within the tank 82. A duct 84 disposed centrally on the top of the tank 82 permits the air at the center of the cyclone established within the tank 82 to move out of the tank to the ambient atmosphere.

The settling tanks 70, 74, and 76 and the centrifuge tank 82 function to remove the minerals from the air stream moving therethrough in the following manner: Due to the increasing cross sectional area of the ducts 66 and 72 and 78, the air stream moves through the settling

tanks 70, 74 and 76 at successively smaller velocities. As a result, a volume of air moving in the air stream will spend a greater period of time in the settling tank 76 than in the tank 74, and a greater period of time in the tank 74 than in the tank 70. Mineral particles drop out of the air stream continuously as it moves from the duct 66 into the centrifuge tank 82, the heaviest particles dropping out first and the lightest particles dropping out last. Accordingly, the settling tank 70 will, for the most part, receive the heaviest particles carried by the air stream. The settling tank 74 will receive lighter particles and the settling tank 76 will receive still lighter particles.

The particles remaining in the air stream emerging from the tank 76 are centrifuged from the air stream into the tank 82 as a result of the cyclonic movement of air within this tank. The centrifuged particles drop into a funnel portion 86 at the base of the tank 82.

The air emerging from the tank 82 through the duct 84 is substantially free of mineral particles.

In the foregoing, a process for removing minerals from the air stream, wherein the minerals are divided into four groups according to specific gravity has been described. It is to be understood that the division according to specific gravity is neither precise nor abrupt. However, in some cases, particularly in the case of uranium and vanadium ores where the uranium mineral has a greater specific gravity than the vanadium mineral, the resultant enrichment of the uranium mineral may effect important economies in the subsequent chemical separation of uranium and vanadium.

In the foregoing, a purely mechanical method for upgrading ore has been described. In typical pilot operations, an apparatus such as that described herein processing 2400 tons of uranium ore per day produces 24 tons of enriched uranium ore with approximately 98% efficiency. That is, 98% of the mineral present in the original ore is being recovered in 48,000 pounds of enriched ore.

These figures were obtained with apparatus operating continuously. Continuous operation is preferred for the reason that each shutdown of the apparatus will result in a loss of minerals in the granules which are permitted to settle out of the tanks 34 and 60.

In the preceding, the construction and operation of the apparatus has been described with particular emphasis on demineralizing sandstone ores. It will be apparent, however, that any ore formed of granules, or the like, having minerals adhered to the surfaces thereof may be processed in the present equipment.

Although the device has been described in connection with the use of minerals deposited in sandstone, the same apparatus and the same method may be used where uranium and vanadium is found in the seams of stratified ores. That is, the gangue may be found in layers and the uranium and vanadium ore being deposited in the seams between the layers of gangue.

The apparatus and the process disclosed herein may be used in upgrading a great number of different types of ores, as for example, mineral bearing lignite, shale, phosphorous stones, pitchblende and undoubtedly numerous other types of ores.

Although the device is described primarily for use in connection with uranium and vanadium ores, the same process and the same apparatus may be used for upgrading numerous other types of minerals. Up to the present time, the apparatus has been used in upgrading 21 different minerals.

Although the preferred embodiments of the device have been described, it will be understood that within the purview of this invention various changes may be made in the form, details, proportion and arrangment of parts, the combination thereof, and mode of operation, which generally stated consist in a device capable of carrying

out the objects set forth, as disclosed and defined in the appended claims.

Having thus described my invention, I claim:

1. In an apparatus for upgrading ore, including means for fracturing the ore into granules of a predetermined mesh, means for subjecting the ore granules to ballistic interaction to free the minerals adhered to the surfaces thereof, and means for separating the granules thus freed from the ore fragments, the means for subjecting the ore fragments to ballistic interaction including a vertically disposed tank, means providing an ore inlet at the bottom of said tank, first blower means associated with said inlet receiving the ore fragments and hurling the ore fragments vertically upwardly into said tank in an air stream, means providing a baffle in said tank for limiting unobstructed upward motion of said air stream and reflecting the ore fragments carried in said air stream downwardly through said tank, a plurality of deflector elements mounted on the sides of said tank for deflecting the downwardly moving ore fragments into the upwardly moving air stream for producing ballistic interaction of the ore fragments, the means for separating the minerals freed by ballistic interaction of the ore granules including means providing an outlet from said tank above said baffle, second blower means associated with said outlet for drawing air out of said tank and the mineral fragments therewith, said second blower means having a greater capacity than said first blower means, and means providing an ore fragment outlet in the base of said tank for removing partially demineralized ore fragments.

2. An apparatus for subjecting ore granules to ballistic interaction so as to free minerals from the surfaces of said ore granules including a vertically disposed cylindrical tank, means providing an inlet at the base of said tank, means for introducing ore granules in a high velocity upwardly moving air stream into said tank through said inlet, means providing a baffle adjacent the top of said tank in the path of said air stream, the ore granules carried in said air stream impinging upon said baffle and rebounding downwardly in said tank, a plurality of annular deflector rings mounted in vertically spaced relation in said tank so as to encircle said air stream, said deflector rings tapering radially inwardly from the walls of said tank so as to have a triangular cross section and functioning to deflect both upwardly and downwardly moving air granules, which have strayed from the air stream, back into the air stream so as to produce a ballistic interaction of the ore granules, means providing an air outlet from said tank above said baffle permitting air and mineral fragments carried thereby to escape from said tank, and means providing an outlet at the base of said tank for the partially demineralized ore granules.

3. The apparatus according to claim 2, including a siren for introducing high velocity sound waves to the interior of said tank.

4. The apparatus according to claim 2, including a second cylindrical tank duplicating the first tank, and second blower means receiving the partially demineralized ore granules from the outlet of said first tank for

injecting the partially demineralized ore granules vertically upwardly into said second tank to further remove minerals from said ore granules, said second tank having an air outlet communicating with the air outlet of said first tank.

5. The apparatus according to claim 2 wherein said baffle is resilient.

6. An apparatus for upgrading ore comprising means for fracturing the ore into its natural granules, a tank, means providing an ore inlet to said tank, blower means associated with said inlet for hurling the ore granules into said tank in an air stream, means providing a baffle in said tank for reflecting the ore granules carried in the air stream in an opposite direction, a deflector element mounted in said tank for deflecting the oppositely moving or granules into the air stream thereby producing ballistic interaction of the ore granules, means providing an air outlet at the top of said tank permitting escape of air from said tank along with mineral fragments carried thereby, and means providing an outlet in the base of said tank permitting escape of partially demineralized ore fragments.

7. In a method of ore upgrading, the steps of breaking a mass of ore into natural granules of a predetermined mesh, the natural ore granules being comprised of minerals adhered to the surfaces of gangue particles, directing the granules through a tank in a collimated fluid stream passing in one direction therethrough; and reflecting the granules in the fluid stream in a direction opposite said one direction whereby the reflected granules ballistically interact with the granules carried by the collimated fluid stream to release the minerals from the surfaces of the gangue particles, the fluid stream carrying the released minerals from the tank whereby the minerals are separated from the gangue particles.

8. The method according to claim 7, including the step of subjecting the fluid stream to high frequency sound waves simultaneously with the ballistic interaction of the granules to prevent recombination of the released minerals with the gangue particles.

References Cited in the file of this patent

UNITED STATES PATENTS

197,897	Rice	Dec. 4, 1877
443,901	Craig	Dec. 30, 1890
447,027	Hallowell	Feb. 24, 1891
1,325,676	McKelvey	Dec. 23, 1919
1,619,295	Gardner	Mar. 1, 1927
1,847,009	Kollbohm	Feb. 23, 1932
2,363,937	Brandt et al.	Nov. 28, 1944
2,538,833	De Rycke	Jan. 23, 1951
2,672,296	Venable	Mar. 16, 1954
2,709,552	Lecher	May 31, 1955
2,826,369	Haltmeier	Mar. 11, 1958
2,832,545	Segraves	Apr. 29, 1958
2,853,241	Gindoff et al.	Sept. 23, 1958

FOREIGN PATENTS

274,278	Great Britain	July 21, 1927

UNITED STATES PATENT OFFICE

CERTIFICATE OF CORRECTION

Patent No. 3,062,458 November 6, 1962

Arthur G. Dearing

It is hereby certified that error appears in the above numbered patent requiring correction and that the said Letters Patent should read as corrected below.

Column 1, line 18, for "seperating" read -- separating --; line 35, for "ballastic" read -- ballistic --; column 3, line 34, for "or" read -- ore --; line 61, strike out "of"; line 65, for "The" read -- This --; column 6, line 16, for "or" read -- ore --.

Signed and sealed this 16th day of April 1963.

(SEAL)
Attest:

ERNEST W. SWIDER
Attesting Officer

DAVID L. LADD
Commissioner of Patents

Tallahassee Area Community, inc. (TAC)
1739 Fremont County Rd. 21A
Canon City, CO 81212

July 18, 2016

Jennifer Opila, Radioactive Programsogram Manager
Colorado Department of Public Health and Environment
4300 Cherry Creek South Drive
Denver, CO 80260
jennifer.opila@state.co.us

State of Colorado - Attorney General Office
Natural Resources & Environment Section
Meg Parrish
1300 Broadway St, 7th Floor
Denver, CO 80203
meg.parish@coag.gov

Stephen Poy Agreement State Programs Branch
Division of Material Safety, State, Tribal, and Rulemaking Programs
Office of Nuclear Material Safety and Safeguards
U.S. Nuclear Regulatory Commission
Stephen.Poy@nrc.gov

Submitted via email to:
jennifer.opila@state.co.us
meg.parish@coag.gov
Stephen.Poy@nrc.gov

RE: ABLATION TECHNOLOGY LICENSING DECISION COMMENT

Dear Mrs. Opila, Ms. Parish and Mr. Poy:

The Tallahassee Area of Fremont County, Colorado, has been plagued by abandonment of uranium mines resulting in lingering contamination that the Colorado Department of Public Health and Environment (CDPHE) has recently documented. TAC is not opposed to proper methods of cleaning up these abandoned uranium mine sites. We appreciate this opportunity to comment upon: The kind of application information, financial assurances and public process that would be appropriate if a Radioactive Materials License for Ablation technology will be required. Striking the correct regulatory balance at the outset could save all parties valuable time, energy and resources. TAC believes that there should be a comprehensive regulatory framework arrived at in a

full and formal Stakeholder process so that only one set of regulations encompasses all of the possible applications of this complicated technology. TAC wishes to state that we fully support the scientific comments that will be submitted by Information Network for Responsible Mining (INFORM) that were performed by Paul Robinson of Southwest Research and Information Center (SRIC).

Complete disarray could ensue if the current regulatory possibility is simply confined to the Sunday Mine Complex (SMC). Additionally, the public should be afforded the opportunity to comment upon Nuclear Regulatory Commission (NRC) clarification to CDPHE due August 1st - six business days after public comments are closed. Indeed the Department's request of a NRC comment at this point in the process is confusing. TAC is not clear as to whether the NRC will be reviewing the entire record that pertains to this experimental process? Or if the only item that NRC is to review is the letter requesting their comment by August 1st? TAC firmly believes that the NRC must review the entire record in order to be fully informed on the merits of this experimental process; including the entire set of comments by Stakeholders (see BLR's submissions: https://www.colorado.gov/pacific/cdphe/ablation-process-black-range-minerals.)

TAC already recognizes the timing issues and problems that the current process has presented. New and vague technical information appeared on the website for comment with only days before the comments are due to be finalized. This process has lacked organization and as an affected party we fear the entire regulatory scheme will as well.

We would like to propose a solution. TAC was party to the Rulemaking for HB 1161 that DRMS conducted in which there was an informal process followed by a formal process. Our comment at this point is that the current process can be salvaged only by using this initial comment period as an informal process that would effectively lead all affected parties into a formal process. Both the informal and formal processes that DRMS used to institute rules for In-situ Leach (ISL) led to a solid set of regulations that both the companies and the public could rely upon.

To regulate this complicated technology in a "piece-meal" manner is to risk total and complete changes to the regulations as many of Black Range Mineral's (BLR) currently-unanswered questions are addressed. Depending upon a variety of possible answers, absolute "game-changing" information could come to light. For example, one exacting answer to the unanswered question of the handling of the wastewater could change the entire legal issues of this proposal. It is easily foreseeable that regulations for ISLwould apply if an answer were to be provided by BLR regarding the use or impoundment of the wastewater.

One can easily foresee time-consuming legal battles that would take much more time to adjudicate than an exacting up-front process would require; which could dispel uncertainty for all parties from the very beginning. Now is the time to instill confidence for the regulators; the companies in the different states who are proposing Ablation; and the public by development of an appropriate and comprehensive regulatory scheme which can be relied upon across all applications in every state.

The information submitted by Black Range Minerals (BLR) is vague and incomplete and leaves more questions than answers. This is not the first instance of incomplete information that our community has been subjected to by BLR proposals. The Tallahassee Area Community has fully-documented reasons for requesting full and complete disclosure due to past experience with BLR:

- In 2007, BLR drilled 70 non-permitted uranium prospecting holes without **ever** approaching the Division of Water Resources (DWR) to obtain the necessary Water Augmentation Plan. (See attached email string regarding nonexistent request for water augmentation plan for 2007 drilling program between Kay Hawklee and Bill Richie of DWR.)

- Although the Zoning Regulations clearly called for a need to apply for a Conditional Use Permit (CUP), in 2007 the company drilled 70 prospecting holes without obtaining the necessary permit from Fremont County.

- In 2014 BLR applied to conduct UBHM testing to be performed under its prospecting permit despite telling the Canon City Daily Record and announcing through several investor publications that it was in "the early stages of mining" and prospecting had been "finalized" in 2012. Indeed in February of 2012, BLR was in discussion with DRMS staff who was assisting them in finding an example application of a Designated Mining Operation to use for filing a mining permit - yet to be submitted.

- In 2015, the Mined Land Reclamation Board (MLRB) reversed a Division of Mining Reclamation and Safety (DRMS) staff decision allowing BLR to test Underground Bore Hole Mining (UBHM) under its prospecting permit. The MLRB struck down BLR's attempt to mine under a prospecting permit by ruling the following: "Based on the foregoing findings of fact and conclusions of law, the Board determines that the activities proposed in the Application constitute a “mining operation” as that term is defined by the Act and hereby REVERSES the decision of the Division to approve Modification MD-03 and REMANDS Modification MD-03 to the Division to require submission of a reclamation permit application."

- Since 2012 BLR and WUC have tested the Ablation process in the States of Wyoming and Colorado without inquiring of the NRC or the RMU Department of CDPHE as to what permit would be necessary before testing Ablation: *"A detailed operational demonstration of the ablation mining technology was undertaken on stockpiled ore from the October mine on the weekend of September 11 and 12 2015." (http://www.marketwatch.com/story/western-uranium-corporation-provides-results-of-annual-general-and-special-meeting-and-ablation-mining-technology-2015-09-16-91735250)*

- Neither have BLR or WUC obtained the necessary permit from DRMS; even though, the companies claim the process is mining. As a result of public outcry, the RMU of Colorado issued a Cease and Desist order for testing of Ablation limiting testing to 15 lbs. BLR published intent to test 1000 lbs. of ore as early as 2011.

- This is a company who would display an altered legal definition of "by-product" material in three presentations to the public.

    - Displaying the complete and correct legal definition at the final public presentation only after being prompted to do so.

As for the question of bonding requirements, nothing short of full bond amounts required by a Uranium Milling Radioactive Materials License should be considered:

- Fremont County has had difficulty collecting fees from BLR that was a condition of the CUP issued them: Commissioner Ed Norden wrote to us the following: "*we were unable to close out the CUP pending Black Range's final reimbursement to the county for work performed by Western Land and Water. We had waited well over a year for that final payment. It was not until they were threatened with legal action to pursue a violation of their permit that we received prompt and final payment. The county received a check for $3,617 several weeks ago."*

- BLR has never mined anything. An experimental process in the hands of a junior mining company should be governed by a strict, comprehensive regulatory scheme.

Additionally, after each instance in which BLR was forced either by Fremont County, DRMS, or DWR to follow existing regulations, BLR has scaled back its operations:

- After the Fremont County CUP with strict conditions, BLR only drilled seven additional prospecting holes.

- In its 2014 application to DRMS for a UBHM test, BLR suggested a vague amount of Monitoring Holes to track excursions - somewhere between one and 30. Then BLR only actually only drilled five Monitoring Holes and used seven Cyprus Mines holes drilled in 1978 and 1979.

- While defending its approval of a UBHM test hole in front of the MLRB under its prospecting permit, BLR employees could not answer Board members' questions of:
  - Where the test hole would be located.
  - If an EPA Underground Injection Control (UIC) permit would be necessary.
  - The entire application to DRMS was as vague as is the current proposal in front of the RMU currently.

In addition to being vague to regulators, BLR statements to investors are vague and may be misleading:

- BLR claims 91 million pounds of Uranium on Hansen/Taylor Ranch; however, that figure is based on a cut-off value of 0.025% which is economically unrealistic. Their formal documents quote both 0.025 and 0.075% cut-off (approx. half the poundage) but even 0.075 is unrealistic. In today's Uranium market and for the foreseeable future, the proper number is likely 0.1% or higher. Significantly less recoverable uranium than investors have been told.
- BLR continually includes the High Park mineral deposit in its claim of poundage Uranium, but never was authorized to prospect there (neither by the state nor the county.)
- BLR has promised a PFS or PEA but never performed one; instead, relies

on a TetraTech Scoping Study hypotheticals.

- The majority of their geo-hydrological data was taken from the 35-40 year old Cyprus Mining Company work. Data that is old, unreliable and may not pass Canadian securities regulator scrutiny.

It is not a stretch to entertain the idea that if Ablation Technology is declared to be "mining," it will be paired with Underground Bore Hole Mining (UBHM) in very short order. However, our organization has consulted with counsel who believes that when the loop is closed between Ablation and UBHM, the entire process should be regulated under a Uranium Milling Radioactive Materials License. Given the history of uranium milling and mining contamination in the State of Colorado, no less than a thorough-scientific vetting should be required. A sound regulatory foundation is necessary at the outset; lest advantage be taken and unintended consequences result in damage to our vital water well quality.

It is appropriate to raise UBHM in the context of ablation because in the Tallahassee Area the two go together hand in hand as steps in the same process. In the Tallahassee Area, UBHM is the first step in the Uranium processing chain. At the forefront, there should be a competent analysis of the environmental impacts of Ablation used in conjunction with UBHM. Scientific evidence should be submitted on how the Ablation and UBHM processes work together; in order to make sound regulatory decisions. Fremont County Board of Commissioners have also requested by comment letter that the two technologies be assessed at this time.

It is no surprise that the company has turned its focus on a singular instance of Ablation at the Sunday mines in San Miguel County because it would not involve UBHM. This is an easier test case to make without talking about UBHM, which has already proven to be problematic for the company. The company would prefer that the regulators make their decision based solely on the SMC scenario without having to look at Ablation combined with UBHM.

An educated decision should be made only after all of the information is on the table, and in the regulators hands, in order to determine how it ought to be regulated under the Atomic Energy Act. However, material so far produced by BLR is incomplete because it does not have any information on UBHM which is part and parcel for TAC. Complete information is paramount for experimental technologies in the hands of a company who has changed courses many times, has only conducted prospecting, and cannot submit complete information on possible uranium milling. Furthermore, the Department does not have adequate information as how to look at a comprehensive scheme for Ablation regulation because no information on UBHM has been submitted that must be considered; along with, Ablation.

For the above-mentioned reasons TAC requests that the Department require:

- The highest bond be imposed by requiring a Uranium Milling Radioactive Materials License
- The most stringent license requirements be imposed by requiring a Uranium Milling Radioactive Materials License

Should the Department use more of its time reinventing the wheel with so many unknowns? What is known is that the requirements of the already existing Uranium Milling Radioactive Materials License Part 18 can and would answer unknowns. However, if the Department chooses to create

an entire new License category, TAC suggests the use of an informal and a formal Stakeholders' process.

Based upon a documented history of omissions and attempts to circumvent proper regulations by this company, and based upon the plethora of technical and legal comments that will be submitted to CDPHE by others and fully-supported by TAC, the Department should require nothing less than the comprehensive Uranium Milling Radioactive Materials License. A lesser standard could be cause for regret in the future and is unthinkable given the past history of contamination by the uranium mining and milling industry in Fremont County.

Finally, TAC hopes that the Department will require accurate testing and full scientific data prior to making a decision on how this process should be regulated and that no rush to judgment is taken despite outside pressure.

Sincerely,
Kay M. Hawklee
Vice President, Tallahassee Area Community, inc. (TAC)

CC:
Bob Randall: Executive Director, Colorado Department of Natural Resources
Ginny Brannon: Director, Division of Reclamation Mining and Safety

Attachments:
DWR email string re: no contact for water permit for BLR's 2007 prospecting program

From: Richie, Bill <bill.richie@state.co.us>
To: Khawklee <Khawklee@aol.com>
Subject: Re: Request for Information
Date: Wed, Oct 24, 2012 1:41 pm

After looking a little deeper, your records are correct in that the most recent SWSP application, dated June 2012 was denied and the application withdrawn by letter dated August 6, 2012.

When you asked about the source of water for the wells, I took that to mean the acquifer that was being tapped. That led to my response about the sketch's showing the well depth. In hind sight, I guess you might have been asking about the source of replacement water for the out-of-priority diversions. With that said, I have no knowlede of Black Range trying to use ground water for any purpose.

And, I haven't found any correspondence dated 2007; no SWSP and no well permits.

Bill Richie
Decreed Augmentation Plan Coordinator
Division of Water Resources
(719) 542-3368 ext 2124
Bill.Richie@state.co.us

On Tue, Oct 23, 2012 at 6:43 AM, <Khawklee@aol.com> wrote:

> Thanks Bill,
> I really appreciate the time you dedicated to answering my questions. And thank you for the information you attached. I have a few more questions in order to clarify exactly what this situation was in the past, and is at present:
>
> 1. Regarding your answer:
>
> *The current SWSP on file relates only to diverting from Fear Creek via Spring Ditch for its exploratory drilling needs with replacement of depletions coming from dry-up acreage under the Spring Ditch..*
>
> It is my understanding that the first request through a SWSP to divert water from Fear Creek was denied. Black Range then re-submitted another SWSP for water owned by Mr. Ron Walker, and then withdrew that request.

Therefore, my question is this:
Is there a current active SWSP that has not been denied or withdrawn that Black Range Minerals can use in order to take any groundwater?

2. In your reply, you state:

You might look at these permit files on line, as each has a sketch and description of the well depth, which might address your question as to the source of the water.

I'm not sure what you mean by this statement. Can you explain it further? Has BLR ever approached DWR to verify that down-hole water can be used in its drilling program? If so, what was the answer and is there permission to do so?

3. Was there ever a permit application submitted and granted giving Black Range Minerals the authority to use Taylor Ranch water (or any other water) to drill prospecting holes in 2007?

Was there ever an inquiry or correspondence in 2007, or earlier, about requirements from DWR for using Taylor Ranch water for BLR's 2007 drilling program?

Again, Thank you for your time.
Sincerely,
Kay Hawklee

In a message dated 10/22/2012 1:36:39 P.M. Central America Standard , bill.richie@state.co.us writes:

> Kay,
> With reference to the Taylor Ranch part of your questions, you are probably aware of two current court applications which have been consolidated into one case. 11cw78 and 12cw78 have been consolidated into 11cw78 as both applictions "involve the exact same water rights, have the same applicant and have the same sole objector - the Tallahassee Community Area, Inc." 11cw78 seeks a detemination that the augmentation plan of W4806 "did not render continued irrigation use...illegal". 12cw78 seeks to change the decreed points of diversion to historic locations. There is a telephone conference set for November 5between counsel of racord and Judge

Schwartz to set a date for trial. I did not find any correspondence from individual Taylor Ranch family members in our files.

The current SWSP on file relates only to diverting from Fear Creek via Spring Ditch for its exploratory drilling needs with replacement of depletions coming from dry-up acreage under the Spring Ditch..

With reference to well permits dated 2007: I was unable to find any at all. There are 7 new monitoring well permits issued in December 2011 for wells that were originally drilled in 1978 or 1979 "without a permit or verbal nitification" to DWR. Those permit numbers are 287181-82-83-84-85-86-87. You might look at these permit files on line, as each has a sketch and description of the well depth, which might address your question as to the source of the water. I am attaching lists of well permits for sections 21-22-27-28 Township 17south Range 73west which will tell you when well permits were issued. Keep in mind that when the list does not show a well depth or distance from section line information, chances are the well was never drilled. Quite a few of the Cyprus Mines permits fall into that catagory. There si also an aerial shot of sections 21 and 27 that show well locations, but they are mostly in the center of the quarter-quarter which means we don't have a better location.

I don't think I've helped you much, but am willing to try again if you see something you need from me.

Bill Richie
Decreed Augmentation Plan Coordinator
Division of Water Resources
(719) 542-3368 ext 2124
Bill.Richie@state.co.us

On Tue, Oct 16, 2012 at 3:32 PM, khawklee@aol.com <khawklee@aol.com> wrote:

> Hi Bill,
> I sent a request for information last week (but don't know if you got it) for this info:
>
> > All records and correspondence to or from Black Range Minerals from 2006 to the current date regarding the following:

historic records, applications, permits, and status of adjudication of water rights.

Since then, I realize that I need to ask for this info too:

All records and correspondence to or from individual Taylor Ranch family members or the Taylor Ranch from 2007 to current date regarding the following:
historic records, applications, permits, and status of adjudication of water rights.

Please let me know if you got this email.
Hope all is well.

Let me know if you need any clarification as to what is needed. For instance, the SWSPs are on the website and we've got that info. I don't want to bother you requesting info that is readily available on the website already. But, there may be correspondence and applications that are not on the website going back to 2006. I'm specifically looking for any permits that Black Range might have applied for in 2007. The company drilled 70 holes before getting a permit from Fremont County. I'm interested in specific correspondence regarding the source of water for those 70 prospecting holes.

Thanks,
Kay Hawklee

ABLATION TECHNOLOGY APPLIED TO URANIUM RESOURCES

MAY 2016 WHITE PAPER

**SUBMITTED TO THE COLORADO DEPARTMENT OF PUBLIC HEALTH AND ENVIRONMENT,
RADIATION CONTROL DIVISION – URANIUM PROGRAM**

SUBMITTED BY:

TALLAHASSEE AREA COMMUNITY (TAC)

TABLE OF CONTENTS

I. INTRODUCTION

II. TECHNOLOGY

III. TECHNICAL IMPLICATIONS OF THE TECHNOLOGY

IV. REGULATORY CONSIDERATIONS
- **A. Mining or milling?**
- **B. When does uranium ore become source material?**
- **C. Is ablation technology source material processing?**
- **D. Is impact ablation a uranium milling activity?**
- **E. Colorado Agreement State Implications**

V. CONCLUSION

I. INTRODUCTION

Ablation technology as applied to uranium recovery activities must be distinguished from the many other forms of ablation that have application in numerous industrial fields, including those currently under the jurisdiction of the Department; i.e. laser and radio frequency ablation in various medical applications. We recommend the use of the descriptive term "Impact Ablation" to identify the specific technology discussed in this White Paper.

Impact Ablation is described in detail in U.S. Patent # 8646705 B2, granted February 11, 2014, entitled *Devices, Systems and Methods for Processing Heterogeneous Materials* assigned to Ablation Technologies, LLC of Casper, Wyoming [Application #2013/0068863 A1; filed September 11, 2012, published March 21, 2013, by James A. Coates et al, attached hereto]. A non-exclusive 25 year right to the patent technology and existing hardware was acquired in 2015 by Black Range Minerals, a wholly owned subsidiary of Western Uranium Corporation [CSE:WUC], a junior Canadian company based in Nucla, Colorado.

II. TECHNOLOGY

The technology can be described in simple terms:

1. Pieces of uranium ore, reduced to a suitable size (either by crushing mined ore or from the fragmentation of an underground orebody by Underground Borehole Mining), are mixed with water to form a slurry with about 20% solids.
2. The slurry is pressurized and injected at high velocity into the ablation machine unit via injection nozzles on opposing sides of the interior chamber.
3. The slurry streams impact each other in a high energy kinetic zone which further reduces the ore into a mixture of fine and coarser grained particles.
4. The mixture is then separated into two portions:

a) The fine-grained material representing approximately 10% of the original ore mass which is claimed to contain up to 95% of the uranium in the ore;
b) The coarser-grained material representing approximately 90% of the original mass which contains of 5% or more of the original uranium concentration plus other radiologic and heavy metals in the ore.

5. The portions are partially dewatered. The fine-grained material, as a paste, (the "ablated concentrate") is packaged for transport to a conventional uranium milling facility for further processing and chemical conversion to U3O8 yellowcake. The coarser-grained material, as sludge, is considered waste. The recovered water is proposed to be recycled through the process, either with or without pre-treatment, and ultimately becomes waste.

This technology has not been proven at production scale. The original development was a one-half ton of ore per hour experimental unit; a five ton per hour multi-component prototype has been demonstrated by Western Uranium. A production sized twenty ton per hour unit has been proposed but has not yet been constructed.

If the technology performs at production scale as contemplated by its proponents, it is reasonable to acknowledge the economic benefits resulting from an approximate ten times increase in the concentration of uranium in the ablated concentrate. The amount of uranium to be chemically converted to yellowcake would be the same while the total mass of material to be further processed is much less compared to the amount of the pre-ablation unrefined and unprocessed ore.

III. TECHNICAL IMPLICATIONS OF THE TECHNOLOGY

1. The ablation units are reported to be road-transportable and would be assembled on site for independent operation. Assuming a self-contained power source and that the appropriate licenses and permits were obtained, this could be at inactive as well as active mine sites, at isolated locations of stockpiled ore (or proto-ore/mine waste), or even at heap leaching locations as well as at conventional uranium mills.

2. Despite the claims of the proponents of ablation that it is strictly a physical process and that no chemicals are intentionally introduced into the process, only water (a chemical compound referred to as "the universal solvent), in fact, a number of chemical compounds have significant – if unintended – impact on the ablation process.

In order to create the high energy impact zone required to reduce the injected ore slurry to the desired fine grain, the slurry water must be pressurized prior to injection. As water is pressurized, an increased amount of atmospheric oxygen will be introduced into the slurry. Pursuant to Henry's Law, the amount of increased oxygen incorporated into water is proportional to the degree of pressurization of the water. That oxygen, along with naturally occurring chemical compounds in the ore (i.e. pre-historic carbonaceous material, carbonates and bicarbonates, iron pyrites, etc.) will create an oxidizing environment in the ablation impact chamber similar to the use of an oxidizing lixiviant in *In situ* Leach Solution Mining (ISL).

3. The expected oxidation reaction will cause the chemical conversion of a portion of the insoluble $U+^{4}$ uranium in the ore to the soluble $U+^{6}$ valence state thereby resulting in some of the uranium being dissolved into the slurry water. It is unknown just how much would be solubilized under production conditions since it would depend on the amount of time the ore fragments are in the impact chamber and many other factors.

The Ablation Technologies patent, however, reports an example of more than 25% of the original ore concentration of uranium found dissolved in recovered process water [Example 8, section 0108 of the Patent Application, page 13] which was able to be recovered (along with the accompanying radium) by the same ion-exchange process used in ISL [the last two sentences of Example 3, Section 0091 of the Patent Application, page 11]

4. The ablation proponents claim that up to 95% or more of the uranium in the original unrefined and unprocessed ore (reported results from the experimental unit indicate a range of 80% to 99%) would be recoverable in the "ablated concentrate". That means that 5% -- up to 20% -- would remain in the so-called "barren rock" or "clean sand" proposed to be used as backfill.

5. The uranium recovery rate claimed for the ablated concentrate does not account for the amount of uranium that will be dissolved into the process water. Unless that water is subjected to a ISL leachate- type ion exchange uranium recovery process, a significant amount of the targeted product would be lost as waste. Either the economic benefits of the ablation would be reduced or there would be additional regulatory implications.

6. Assuming a 20 ton per hour -- in an eight or ten hour day -- production unit, a massive quantity of waste (~90% of the original ore mass) would be produced that would be not only radioactive and a radon emissions generator, but also a potential source of other health and environmental concerns such as acid formation from sulfates in the ore and radioactive dust dispersion. If this waste (gangue) were to be used as backfill of an underground mine, its geophysical and hydrological impact on the surrounding area and groundwater would have to be considered.

7. The process water recovered by partially dewatering the fine and coarse grained portions is proposed to be recycled through the ablation unit. Unless it is pre-treated, the concentrations of uranium, radium, and other heavy metals in the water will increase as it is repressurized and exposed to additional ore fragments. If it is pre-treated and the uranium is recovered by the ion exchange process, that is the same procedure as obtained by *In Situ* Leach Solution Mining. The resulting recovered or "depleted" water ultimately would likely have to be disposed of by injection into an EPA UIC approved Class I Deep Injection Well as is the waste water from ISL operations.

IV. REGULATORY CONSIDERATIONS

The regulatory status of impact ablation as applied to uranium resource recovery has not yet been determined. The ablation proponents claim that it is nothing more than an extension of mining while, we, and others, have concluded that it is a non-conventional uranium milling activity subject to the radiation control regulations, as well as a potentially useful first step in the multi-step ore processing procedure required to produce U3O8 yellowcake.

Mining or Milling?

Uranium mining operations are under the jurisdiction of various federal and state mining regulatory agencies and are excluded from the purview of the Atomic Energy Act and the regulatory jurisdiction of the Nuclear Regulatory Commission (NRC) and the various Agreement States.

The most comprehensive explanation of the line drawn between uranium mining and milling -- and radiation control licensing authority -- is found in NRC guidance in Health Physics Position 184 – derived from a 1977 legal determination that uranium ore crushing is licensable:

> *"… 10 CFR 40.13 (b) exempts for licensing unrefined and unprocessed ore (excepting export). 10 CFR 40.4 (k) defines "unrefined and unprocessed ore" as ore in its natural form prior to any processing, such as grinding, roasting or beneficiating, or refining. "Processing" in this definition includes both physical and chemical procedures that alter the ore from the condition it was in just after removal from its place of deposit in nature. It is accepted interpretation of the AEA of 1954, as amended, that section 52 does not authorize the regulation of uranium mining by licensing. However, AEA does permit regulation by licensing at any stage after mining. 10 CFR 40.13 (b), by exempting the transportation and handling of unprocessed ore, implicitly recognizes this authority to regulate. Further, by drawing the exemption lines at unprocessed and unrefined ore (i.e., ore whose gross appearance and chemical state has not been altered from the point of mining), there is recognition of underlying health and safety considerations. The assumption is that any processing or refining may alter the radiological environment associated with the source material enough so that the health and safety of workers and others becomes a matter of legitimate regulatory concern…"*

[http://www.nrc.gov/about-nrc/radiation/protects-you/hppos/hppos184.html]

HPPOS 184 has been confirmed as the current position of NRC staff,
[Letter, Duncan White-NRC/Alter-TAC March 20, 2013]
[http://pbadupws.nrc.gov/docs/ML1307/ML13077A177.pdf] [Enclosure Point 2]

The plain language used in HPPOS 184 leaves little opportunity for creative interpretation as to the bright line identifying the transition from a mining operation to the start of the procedure to convert uranium ore to U3O8 yellowcake. That which is done at the point of mining is not subject to radiation control regulation, whereas any procedure thereafter that affects the gross appearance or chemical state of the "unrefined and unprocessed ore" is under the jurisdiction of the NRC (or Agreement States).

The federal Plain Writing Act of 2010 requires the federal government to write all new publications, forms, and publicly distributed documents in a "clear, concise manner". [PUBLIC LAW 111–274—OCT. 13, 2010, 124 STAT. 2861] [https://www.gpo.gov/fdsys/pkg/PLAW-111publ274/pdf/PLAW-111publ274.pdf]

In the final guidance for implementing the Act, the Administrator of the Office of Information and Regulatory Affairs, Office of Management and Budget, stated:

> *"As defined in the Act, plain writing is writing that is clear, concise, well-organized, and consistent with other best practices appropriate to the subject or field and intended audience. Such writing avoids jargon, redundancy, ambiguity, and obscurity."*
> [https://www.whitehouse.gov/sites/default/files/omb/memoranda/2011/m11-15.pdf]

The OMB memorandum further identified a number of benefits of plain writing, including:

> *Improving public understanding of government communication;*
> *Reducing the need for the public to seek clarification from agency staff;*
> *Improving public understanding of agency requirements and thereby assist the public in complying with them.*

The NRC has had a "plain language" program since, at least, 2000. The Executive Director for Communications for NRC, in a memorandum entitled Communication Activities, stated*:" The agency is committed to improving communication with the public and other agency stakeholders using plain language in documents and at public meetings…."*
[http://pbadupws.nrc.gov/docs/ML0037/ML003704675.pdf]
The State of Colorado has a similar goal of plain language interpretation.

> *"Under established Colorado judicial precedent, a statute should be interpreted so as to give consistent, harmonious, and sensible effect to all its parts, and its words and phrases should be given effect according to their plain and ordinary meaning*." In re Davisson, 797 P.2d 809 (Colo. App. 1990); People in Interest of J.L.R., 895 P.2d 1151 (Colo. App. 1995).

> *"Those interpreting statutes are not to presume that legislative body used language in a statute idly and with no intent that meaning should be given to its language."* Blue River Defense Comm. v. Town of Silverthorne, 33 Colo. App. 10, 516 P.2d 452 (1973). Rule 3.1.7(7)(b).

Based upon its description in the patent and company literature, the straightforward plain language of the guidance from NRC in HPPOS 184, and considering the many potential sites for its utilization, ablation technology is ***clearly not*** a component of conventional mining.

> ***"Mining*** *is the extraction of valuable minerals or other geological materials from the earth from an orebody, lode, vein, seam, or reef, which forms the mineralized package of economic interest to the miner".*
> [https://en.wikipedia.org/wiki/Mining]

Every dictionary definition of mining refers to the "extraction" or "removal" of the material of interest from the earth. This is acknowledged in HPPOS 184 by reference to the status of "unrefined and unprocessed ore…just after its removal from its place of deposit in nature" – the "point of mining". An activity that isolates and maximizes the quality of the ore during the extraction process, such as "split shot mining", is an inherent part of the mining operation – since it is conducted at the point of mining**.**

It is when uranium ore is subjected to **<u>any</u>** processing after the point of mining that the line is crossed from a mining operation to one which is subject to the radiation control regulations under NRC or Agreement State jurisdiction. "***Any processing***", as used in HPPOS 184, is a particularly broad phrase that expressly includes physical and/or chemical procedures that alter the gross appearance and/or the chemical state of the ore from its original state. For example, the act of crushing mined ore itself is a purely physical process that changes the gross appearance of the "unrefined and unprocessed ore".

When does uranium ore become source material?

> *"**Source Material** means uranium or thorium, or any combination of uranium or thorium, in any physical or chemical form, including ores that contain by weight one-twentieth of 1 percent (0.05 percent) or more of uranium, thorium or any combination thereof. Source material does not include special nuclear material."*
> [6 CCR 1007 Part 1, 10 CFR 40.4]

In October, 2012, in response to an inquiry from Tallahassee Area Community, Mr. Steve Tarlton – then Radiation Program Manager for the Department – made a preliminary determination of the regulatory status of the ablation process:

"We do recognize that the proposed process, if implemented as we now understand it, would result in the possession of source material and would, therefore, require a source material radioactive material license, at a minimum."
[Letter, Tarlton-CDPHE/Alter-TAC, October 16, 2012] (emphasis added)

Since radiation control regulations do not apply to uranium ore prior to processing, it is a logical and reasonable interpretation of Mr. Tarlton's statement that it is the **possession** of ore with the immediate and imminent **intent to process** that is the point at which the ore becomes licensable source material

Is ablation technology source material processing?

The Tarlton determination was confirmed and expanded by NRC staff in a March 2013 letter:

"After review of the ablation process, it appears that the proposed surface ablation processing is an ore grinding or refining process that is subject to source material licensing under 10 CFR Part 40 (or Agreement State equivalent regulations). A source material license is required because the ablation process physically changes the ore… The ablation process would, at a minimum, be required to have a source material license. The NRC is also evaluating whether the application of this process to uranium recovery should be licensed as uranium milling. This determination coincides and supports Mr. Tarlton's statement."
[Letter, Duncan White-NRC/ Alter-TAC, March 20, 2013
[http://pbadupws.nrc.gov/docs/ML1307/ML13077A177.pdf]

Source material processing is a specific radiation control phrase that is simply ore processing, as it is understood in the mining industry in general, applied to uranium ore. The definition of ore processing is very broad: *"**Ore processing** - crushing and separating ore into valuable substances or waste by any of a variety of techniques **Synonyms:** beneficiation, mineral dressing, mineral extraction, mineral processing, ore dressing"*. [http://www.webster-dictionary.org/definition/ore%20processing].

The conventional process for transforming uranium ore into refined yellowcake consists of many individual processing steps beginning with the crushing or grinding step to reduce the ore to small, sand-like particles suitable for chemical conversion of the naturally occurring uranium compound in the ore to U3O8 (yellowcake).

Although the crushing or grinding of the mined ore to prepare it for the chemical leaching next step is usually done at a conventional uranium mill, that is not a requirement. As a preliminary, potentially economically beneficial, step the ablation process, as part of its function, produces the particle size desired.

That activity, by itself, takes ablation technology out of the mining operation jurisdiction and into radiation control regulation, even if done at a mine site. There are, however, additional processes incorporated into ablation technology. The reduced-size particles of ore are separated by gravity screening into the fine-grain and coarser-grain portions. The fine-grain material – the targeted economic component – contains the bulk of the uranium (the ablated concentrate) while the coarser-grain material is discarded as waste (gangue).

Beneficiation of uranium ore, which is acknowledged as source material processing subject to licensing, is defined in 40 CFR 261.4(b)(7) and specifically includes crushing and grinding of ore as well as other strictly physical ore processing activities

such as separating, sizing, screening, isolating, concentrating and the process of elutriation – all part of the ablation process.

Although this definition is part of the federal hazardous waste regulation and not the radiation control regulation, it is the most comprehensive definition available. The dictionary and encyclopedia definitions of beneficiation are very general; for example:

> "*In the mining industry* ***beneficiation*** *or* ***benefication*** *in extractive metallurgy, is any process which removes the gangue minerals from ore to produce a higher grade product (concentrate), and a waste stream (tailings). Some beneficiation processes are froth flotation and gravity separation*." https://en.wikipedia.org/wiki/Beneficiation

Is impact ablation a uranium milling activity?

An individual source material processing activity, of and by itself, is not necessarily a uranium milling activity. The definition of uranium milling is specific:

> *"**Uranium milling** means **any activity** that results in the production of byproduct material, as defined in Part 18"*
>
> *"**Byproduct material** … means the tailings or wastes produced by the extraction **or** concentration of uranium or thorium from **any ore** processed primarily for its source material content, including discrete surface wastes resulting from uranium solution extraction processes. Underground ore bodies depleted by such solution extraction operations do not constitute "byproduct material," within this definition".*
> [6 CCR 1007-1, Section 18.2, emphasis added], [See also 10 CFR 40.4]

Certain specific source material processing and licensable activities that are inherent parts of the overall process to produce yellowcake do not produce waste (therefore no "byproduct material") such as ore buying, ore sorting, and crushing or grinding ore. Although these activities are usually part of a conventional uranium milling operation, when they take place outside of the confines of a "mill" they are licensable but not as a "uranium milling activity".

On the other hand, ablation technology by its very nature produces waste. It is a process which, in the very words of the encyclopedia definition of beneficiation, ***"removes the gangue minerals from ore to produce a higher grade product (concentrate) and a waste stream (tailings)."***

The solid waste stream –approximately 90% of the original ore mass – is essentially the same wet sandy mixture of residual uranium, radium, and other heavy metals as found in the tailings from a conventional mill except for lacking the acids utilized in the leaching process. It is byproduct material**.**

The fact that the uranium compound found in ablation waste is unchanged from the original ore rather than the chemically converted U3O8 is not significant with respect to the definition of byproduct material. That definition refers to "the concentration of uranium" from "any ore for its source material content". The "ablated concentrate" is the targeted source material content. The radioactivity from the residual uranium and the accompanying radium decay product in the waste, and the potential for radon emission generation, is the same from ablation waste as for conventional mill tailings and requires the same human health and safety considerations.

Similarly, the recovered process water meets the definition of byproduct material following any potential recycling through the ablation process. If the water is subjected to the ion-exchange process to recover the dissolved uranium resulting from the partial

chemical conversion of the ore, it would meet the definition of source material in the same manner as ISL leachate, and the depleted water would be byproduct material.

In the 2002 NRC Office of General Counsel document entitled *Uranium Milling Activities at Sequoyah Fuels Corporation*, the question of "What Constitutes Uranium Milling" was considered:

> "A fundamental, plain-language, working definition of uranium milling can be constructed from the somewhat circular references contained in the ... regulatory definitions (in 10 CFR 40.4, of uranium milling, byproduct material and source material): *Uranium milling is an activity or series of processes that extracts or concentrates uranium or thorium from any ore primarily for its source material content, and the resulting tailings or waste are 11e.(2) byproduct material."*
> [http://www.nrc.gov/reading-rm/doc-collections/commission/secys/2002/secy2002-0095/2002-0095scy.pdf]
> [See attachment 5]

The OGC document further discussed non-conventional milling and milling at multiple locations. It stated: *"Non-conventional processing ... comprise other technologies.... The distinction among nonconventional milling activities is that these activities often occur at locations other than a uranium mill.... Uranium milling entails many processing steps, which ... are not required to occur at a single location, but often do."*

Colorado Agreement State Implications

The Agreement between the NRC and the State of Colorado requires coordination of their radiation programs. Article V of the Agreement states:

"The Commission will use its best efforts to cooperate with the State and other agreement States in the formulation of standards and regulatory programs of the State and the Commission for protection against hazards of radiation and to assure that State and Commission programs for protection against hazards of radiation will be coordinated and compatible. The State will use its best efforts to cooperate with the Commission and other agreement States in the formulation of standards and regulatory programs of the State and the Commission for protection against hazards of radiation and to assure that the State's program will continue to be compatible with the program of the Commission for the regulation of like materials. The State and the Commission will use their best efforts to keep each other informed of proposed changes in their respective rules and regulations and licensing, inspection and enforcement policies and criteria, and to obtain the comments and assistance of other party thereon."
[ARTICLES OF AGREEMENT BETWEEN THE UNITED STATES ATOMIC ENERGY COMMISSION AND THE STATE OF COLORADO FOR DISCONTINUANCE OF CERTAIN COMMISSION REGULATORY AUTHORITY AND RESPONSIBILITY WITHIN THE STATE PURSUANT TO SECTION 274 OF THE ATOMIC ENERGY ACT OF 1954, AS AMENDED, ARTICLE V]

To date, although NRC has offered assistance to Colorado in the development of regulations governing ablation technology if requested, it has not completely formulated its own position about the technology. It has, however, suggested that there are many areas of concern regarding the health and safety aspects of the technology as disclosed in its response to an inquiry from the Department following the submission of the Ablation White Paper by Black Range Minerals in July 2015.
[http://pbadupws.nrc.gov/docs/ML1525/ML15251A164.pdf

V. CONCLUSION

Ablation technology has applicability in many jurisdictions other than Colorado -- Agreement States as well as those states under NRC jurisdiction. The language of Article V of the Colorado Agreement appears to require that NRC would have to make a formal determination of the regulatory status of the technology and develop appropriate regulations and/or guidance of its own prior to any final state action.

Impact Ablation Technology is not part of any mining operation. When considered in the plain language context of the relevant definitions and the NRC guidances discussed above, it must be recognized as a non-conventional uranium milling activity regardless of where it may be located. As such, it is licensable as uranium milling and is subject to Part 18 of the Colorado Radiation Control Regulations including the relevant criteria itemized in Appendix A.

Lee Alter

I have focused my final comments on the two issues that I believe are of crucial importance in the Department's determination of the regulatory status of ablation technology:

A. The need for the Department to consider the multitude of announced and potential utilizations of this experimental technology and not to make a hasty decision based on one specific application.

B. The proper identification and management of the waste stream resulting from the ablation process.

A. The Black Range/Western Uranium request for a definitive regulatory status determination, and their position that ablation technology is nothing more than an extension of mining, is presented as a site-specific application identifying the Sunday Mine Complex (SMC) in San Miguel County. You have stated that it is your present intention to make a decision on that basis within eight weeks following the close of the public comment period.

That would be a bad decision for at least two very important reasons.

There is no legitimate public policy reason to rush the decision-making without giving full consideration to all of the implications of this new and novel technology. Western Uranium Corporation, on the other hand, has a real reason for attempting to expedite the process. It has limited financial resources and announced its intention earlier this year to commence operations at SMC in late 2016. This activity would be intended not only as a potential revenue generator but also would have value as a marketing tool to enhance its necessary capital raising efforts with investors.

Furthermore, from 2012, Black Range Minerals and later Western Uranium Corporation have publicly announced their claim of the economic benefits of applying ablation technology for many dramatically different uranium recovery scenarios in addition to SMC.

1. The company (Black Range) has clearly stated that the Hansen/Taylor Ranch uranium deposit in Tallahassee in Fremont County cannot be economically exploited without the use of ablation coupled with the other experimental technology, Underground BoreHole Mining (UBHM). [ASX:BLR Announcement, 24 April 2012: Black Range Selects Development Approach for Hansen Uranium Deposit]

2. The company (Black Range) has the rights for ablation processing of the large historic "October" stockpile of uranium ore in Montrose County. [ASX:BLR Announcement, 4 July, 2013: $2 Million Facility for Commercialization of Ablation and Agreement Executed Covering Uranium Ore Stockpile]

3. The company (Western Uranium) announced the receipt of a non-disclosed quantity of uranium ore from Africa to be processed in June-July, 2016 for the express purpose of evaluating ablation's economic viability as part of a conventional milling operation. [CSE:WUC Announcement, SEDAR, May 27, 2016: Western Uranium Corporation Management's Discussion and Analysis, First Quarter 2016]

4. The CEO of Western Uranium has called for the "remediation" of uranium mine waste and sub-economic ore at multiple locations around the state by ablation technology. [**http://www.telluridenews.com/news/article_0b55dbf0-4497-11e6-ab63-df38d7576318.html**] Mr. Glasier has made this suggestion many times over the past few years. This suggestion was also made by Colorado State District 58 Representative Don Coram on the floor of the Colorado Legislature in 2014.

In fact, because the multi-component ablation technology system is road transportable and independent of fixed infrastructure, there is no physical restriction to its utilization anywhere in Colorado and, indeed, in other states across the country with exploitable sandstone-hosted uranium resources. Each site (a "facility" under the definition in the RCR Section 1.2) would have its own unique geographical, demographical, and hydrogeological characteristics and would require detailed and specific scrutiny by not only state regulators, but also by the involved local authorities. Absent a comprehensive and well thought-out general statewide regulatory scheme that would be compatible with NRC guidance and/or regulations, and that would be applicable across the entire spectrum of potential applications, there would be a real likelihood of regulatory chaos that could threaten both human health and the environment.

There is a simple solution. By applying the general standards in Part 18 of the Radiation Control Regulations and by the appropriate interpretations of the relevant criteria of its Appendix A, individual specific radioactive material license conditions could be tailored to each site based on the site-related consideration of the potential risk.

B. Because the NRC has definitively established that the crushing as well as grinding of uranium ore is a source material processing activity [Fonner Letter, 1977; HPPOS 184], it is intuitively obvious that once the "run-of-the-mine" (ROM) uranium ore enters the first stage of the ablation technology system, it is no longer merely "unrefined and unprocessed ore" but rather licensable "source material". Therefore, ablation cannot be considered part of any mining operation but rather, it is source material processing by definition.

At the end of the multi-step ablation process – ore crushing, further particle size reduction, separation into fine and coarser grained portions, isolation of each portion, partial dewatering of each portion, and the packaging of the ablated concentrate – there remains a two component waste stream.

The solid waste represents approximately 90% of the original incoming ore mass. It contains residual uranium (at least 5% or more of the original uranium in the ore), radium, other heavy metals, and other material found in the ore. It has the consistency of a wet, sandy sludge and has the same radiological characteristics as conventional uranium mill tailings. The Black Range/Western Uranium consulting health physicist, Mr. Steven Brown, states: "Similarities with radon emission from uranium mill tailings are considered relevant here (in the Black Range Presentation) since within the various stages of ablated material, all progeny are present in a sandy, moist (or water slurry) matrix". [Black Range Presentation to CDPHE, Attachment 1.2, Section 2.1].

If the waste resulting from source material processing is essentially identical in its radiological profile to conventional uranium mill tailings, it must be identified as "byproduct material" if it is the result of the processing of ore for the purpose of concentrating uranium. There can be no dispute that the ablated concentrate would contain the same amount of uranium -- less processing losses -- as found in the ROM ore but in a matrix that is approximately one-tenth of the original ore mass, Concentration of uranium is the explicit purpose and function of the ablation technology system.

Since the production of byproduct material is at the very heart of the definition of "source material milling" [RCR Section 1.2] and the definition of "uranium milling" [RCR Section 18.2], ablation technology must be regulated as a non-conventional uranium milling activity subject to Part 18. The management and disposal of the ablation waste -- the "tailings" -- would then be governed by the relevant criteria in Appendix A. [See:http://www.nrc.gov/waste/mill-tailings.html]

The liquid waste is a much more complicated subject. Depending on the specific site conditions, the initial and make-up water used to create the slurry containing 20% crushed ore could come from many different sources – contaminated mine water, groundwater from a local aquifer, a local surface water source, or purchased water transported to the site. As it progresses through the ablation system, the slurry water is a component of the "source material". When it is recovered after the partial dewatering of both the ablated concentrate and the solid waste at the end of the ablation processing cycle, it will contain a significant concentration of dissolved uranium, radium, and other heavy metals.

There are three possible options for this recovered process water:

Firstly, it can immediately be recycled with more crushed ore and re-injected into the ablation system. In this case the water remains source material but picks up additional dissolved uranium, etc. as it moves through the process. This option could be repeated for an unknown but surely limited number of times.

Secondly, after each complete ablation cycle or however many cycles that could be done safely, the recovered process water is subjected to the same ion-exchange treatment process to recover the dissolved uranium as that used in *In-Situ* Leach Solution Mining (ISL) – a licensed uranium milling activity. It is unlikely for economic reasons not to recover the uranium when/if the water is pre-treated for recycling. In this case, the water prior to treatment is essentially identical to the leachate from ISL and is defined as source material. Once the uranium is extracted from the leachate, the depleted process water is explicitly defined as byproduct material [RCR Section 18.2: "Byproduct Material" is the same as in definition (2) of 1.2.2 and means the tailings or wastes produced by the extraction or concentration of uranium or thorium from any ore processed primarily for its source material content, **including discrete surface wastes resulting from uranium solution extraction processes…** Emphasis added].

Note that the use of the phrase "surface wastes" in the definition is obviously intended to distinguish the extraction of the uranium from the leachate, from the extraction (solubilization) of the uranium from the underground ore body into the injected process water in ISL operations.

The physical location of the ion-exchange equipment is not relevant. Also, note that the wording of the highlighted portion of the definition is not specific to ISL but rather to **any** "uranium solution extraction processes"

Thirdly, the recovered process water, whether or not recycled through the ablation system, and with or without any treatment, ultimately becomes waste which meets the definition of byproduct material the same as for the solid ablation waste and for depleted ISL leachate.

The management and disposal of this liquid waste has not been explained with any specificity in the Black Range/Western Uranium presentations. Consider that the EPA has concurrent regulatory jurisdiction over the disposal of depleted process water from ISL operations. An Underground Injection Control Class I or Class V Well Permit is required – along with an aquifer exemption. Furthermore, NRC has stated that all depleted ISL fluids, including any underground excursion into surrounding groundwater, is byproduct material [In Stu Recovery of Uranium: EPA Region 8 and ORD Workshop for Government Staff, September 29, 2010, Denver, CO; Presentation by Elise Striz, PhD, Hydrogeologist, Uranium Recovery Licensing Branch, NRC]. Should not ablation waste water be subject to the same criteria?

A clear determination is required that the waste products from the ablation technology system are byproduct material and that the process, wherever it may be located, is a non-conventional uranium milling activity subject to the provisions of Part 18 Licensing Requirements for Uranium and Thorium Processing. Absent that, the entire Department, not just the Radiation Program, would have no regulatory authority over the radiological waste from ablation processing, and its potential threat to human health and the environment. Hazardous waste regulations are inapplicable due to Colorado's incorporation of the federal Bevill Exclusion exempting mining and milling wastes [6 CCR 1007-3, Section 261.4(b)(7)] and, although these wastes are clearly TENORM, the Department has no regulations that apply.

Thank you for the opportunity to make additional comments.

Sincerely,

Lee J Alter
0489 Fremont County Road 21A
Cañon City, CO
AlterConsult898@gmail.com

ABLATION TECHNOLOGY APPLIED TO URANIUM RESOURCES

MAY 2016 WHITE PAPER

**SUBMITTED TO THE COLORADO DEPARTMENT OF PUBLIC HEALTH AND ENVIRONMENT,
RADIATION CONTROL DIVISION – URANIUM PROGRAM**

SUBMITTED BY:

TALLAHASSEE AREA COMMUNITY (TAC)

TABLE OF CONTENTS

I. INTRODUCTION

II. TECHNOLOGY

III. TECHNICAL IMPLICATIONS OF THE TECHNOLOGY

IV. REGULATORY CONSIDERATIONS
- **A. Mining or milling?**
- **B. When does uranium ore become source material?**
- **C. Is ablation technology source material processing?**
- **D. Is impact ablation a uranium milling activity?**
- **E. Colorado Agreement State Implications**

V. CONCLUSION

I. INTRODUCTION

Ablation technology as applied to uranium recovery activities must be distinguished from the many other forms of ablation that have application in numerous industrial fields, including those currently under the jurisdiction of the Department; i.e. laser and radio frequency ablation in various medical applications. We recommend the use of the descriptive term "Impact Ablation" to identify the specific technology discussed in this White Paper.

Impact Ablation is described in detail in U.S. Patent # 8646705 B2, granted February 11, 2014, entitled *Devices, Systems and Methods for Processing Heterogeneous Materials* assigned to Ablation Technologies, LLC of Casper, Wyoming [Application #2013/0068863 A1; filed September 11, 2012, published March 21, 2013, by James A. Coates et al, attached hereto]. A non-exclusive 25 year right to the patent technology and existing hardware was acquired in 2015 by Black Range Minerals, a wholly owned subsidiary of Western Uranium Corporation [CSE:WUC], a junior Canadian company based in Nucla, Colorado.

II. TECHNOLOGY

The technology can be described in simple terms:

1. Pieces of uranium ore, reduced to a suitable size (either by crushing mined ore or from the fragmentation of an underground orebody by Underground Borehole Mining), are mixed with water to form a slurry with about 20% solids.
2. The slurry is pressurized and injected at high velocity into the ablation machine unit via injection nozzles on opposing sides of the interior chamber.
3. The slurry streams impact each other in a high energy kinetic zone which further reduces the ore into a mixture of fine and coarser grained particles.
4. The mixture is then separated into two portions:

a) The fine-grained material representing approximately 10% of the original ore mass which is claimed to contain up to 95% of the uranium in the ore;
b) The coarser-grained material representing approximately 90% of the original mass which contains of 5% or more of the original uranium concentration plus other radiologic and heavy metals in the ore.

5. The portions are partially dewatered. The fine-grained material, as a paste, (the "ablated concentrate") is packaged for transport to a conventional uranium milling facility for further processing and chemical conversion to U3O8 yellowcake. The coarser-grained material, as sludge, is considered waste. The recovered water is proposed to be recycled through the process, either with or without pre-treatment, and ultimately becomes waste.

This technology has not been proven at production scale. The original development was a one-half ton of ore per hour experimental unit; a five ton per hour multi-component prototype has been demonstrated by Western Uranium. A production sized twenty ton per hour unit has been proposed but has not yet been constructed.

If the technology performs at production scale as contemplated by its proponents, it is reasonable to acknowledge the economic benefits resulting from an approximate ten times increase in the concentration of uranium in the ablated concentrate. The amount of uranium to be chemically converted to yellowcake would be the same while the total mass of material to be further processed is much less compared to the amount of the pre-ablation unrefined and unprocessed ore.

III. TECHNICAL IMPLICATIONS OF THE TECHNOLOGY

1. The ablation units are reported to be road-transportable and would be assembled on site for independent operation. Assuming a self-contained power source and that the appropriate licenses and permits were obtained, this could be at inactive as well as active mine sites, at isolated locations of stockpiled ore (or proto-ore/mine waste), or even at heap leaching locations as well as at conventional uranium mills.

2. Despite the claims of the proponents of ablation that it is strictly a physical process and that no chemicals are intentionally introduced into the process, only water (a chemical compound referred to as "the universal solvent), in fact, a number of chemical compounds have significant – if unintended – impact on the ablation process.

In order to create the high energy impact zone required to reduce the injected ore slurry to the desired fine grain, the slurry water must be pressurized prior to injection. As water is pressurized, an increased amount of atmospheric oxygen will be introduced into the slurry. Pursuant to Henry's Law, the amount of increased oxygen incorporated into water is proportional to the degree of pressurization of the water. That oxygen, along with naturally occurring chemical compounds in the ore (i.e. pre-historic carbonaceous material, carbonates and bicarbonates, iron pyrites, etc.) will create an oxidizing environment in the ablation impact chamber similar to the use of an oxidizing lixiviant in *In situ* Leach Solution Mining (ISL).

3. The expected oxidation reaction will cause the chemical conversion of a portion of the insoluble $U+^{4}$ uranium in the ore to the soluble $U+^{6}$ valence state thereby resulting in some of the uranium being dissolved into the slurry water. It is unknown just how much would be solubilized under production conditions since it would depend on the amount of time the ore fragments are in the impact chamber and many other factors.

The Ablation Technologies patent, however, reports an example of more than 25% of the original ore concentration of uranium found dissolved in recovered process water [Example 7, section 0108 of the Patent Application, page 13] which was able to be recovered (along with the accompanying radium) by the same ion-exchange process used in ISL [the last two sentences of Example 3, Section 0091 of the Patent Application, page 11]

4. The ablation proponents claim that up to 95% or more of the uranium in the original unrefined and unprocessed ore (reported results from the experimental unit indicate a range of 80% to 99%) would be recoverable in the "ablated concentrate". That means that 5% -- up to 20% -- would remain in the so-called "barren rock" or "clean sand" proposed to be used as backfill.

5. The uranium recovery rate claimed for the ablated concentrate does not account for the amount of uranium that will be dissolved into the process water. Unless that water is subjected to a ISL leachate- type ion exchange uranium recovery process, a significant amount of the targeted product would be lost as waste. Either the economic benefits of the ablation would be reduced or there would be additional regulatory implications.

6. Assuming a 20 ton per hour -- in an eight or ten hour day -- production unit, a massive quantity of waste (~90% of the original ore mass) would be produced that would be not only radioactive and a radon emissions generator, but also a potential source of other health and environmental concerns such as acid formation from sulfates in the ore and radioactive dust dispersion. If this waste (gangue) were to be used as backfill of an underground mine, its geophysical and hydrological impact on the surrounding area and groundwater would have to be considered.

7. The process water recovered by partially dewatering the fine and coarse grained portions is proposed to be recycled through the ablation unit. Unless it is pre-treated, the concentrations of uranium, radium, and other heavy metals in the water will increase as it is repressurized and exposed to additional ore fragments. If it is pre-treated and the uranium is recovered by the ion exchange process, that is the same procedure as obtained by *In Situ* Leach Solution Mining. The resulting recovered or "depleted" water ultimately would likely have to be disposed of by injection into an EPA UIC approved Class I Deep Injection Well as is the waste water from ISL operations.

IV. REGULATORY CONSIDERATIONS

The regulatory status of impact ablation as applied to uranium resource recovery has not yet been determined. The ablation proponents claim that it is nothing more than an extension of mining while, we, and others, have concluded that it is a non-conventional uranium milling activity subject to the radiation control regulations, as well as a potentially useful first step in the multi-step ore processing procedure required to produce U3O8 yellowcake.

Mining or Milling?

Uranium mining operations are under the jurisdiction of various federal and state mining regulatory agencies and are excluded from the purview of the Atomic Energy Act and the regulatory jurisdiction of the Nuclear Regulatory Commission (NRC) and the various Agreement States.

The most comprehensive explanation of the line drawn between uranium mining and milling -- and radiation control licensing authority -- is found in NRC guidance in Health Physics Position 184 – derived from a 1977 legal determination that uranium ore crushing is licensable:

> *"… 10 CFR 40.13 (b) exempts for licensing unrefined and unprocessed ore (excepting export). 10 CFR 40.4 (k) defines "unrefined and unprocessed ore" as ore in its natural form prior to any processing, such as grinding, roasting or beneficiating, or refining. "Processing" in this definition includes both physical and chemical procedures that alter the ore from the condition it was in just after removal from its place of deposit in nature. It is accepted interpretation of the AEA of 1954, as amended, that section 52 does not authorize the regulation of uranium mining by licensing. However, AEA does permit regulation by licensing at any stage after mining. 10 CFR 40.13 (b), by exempting the transportation and handling of unprocessed ore, implicitly recognizes this authority to regulate. Further, by drawing the exemption lines at unprocessed and unrefined ore (i.e., ore whose gross appearance and chemical state has not been altered from the point of mining), there is recognition of underlying health and safety considerations. The assumption is that any processing or refining may alter the radiological environment associated with the source material enough so that the health and safety of workers and others becomes a matter of legitimate regulatory concern…"*

[http://www.nrc.gov/about-nrc/radiation/protects-you/hppos/hppos184.html]

HPPOS 184 has been confirmed as the current position of NRC staff,
[Letter, Duncan White-NRC/Alter-TAC March 20, 2013]
[http://pbadupws.nrc.gov/docs/ML1307/ML13077A177.pdf] [Enclosure Point 2]

The plain language used in HPPOS 184 leaves little opportunity for creative interpretation as to the bright line identifying the transition from a mining operation to the start of the procedure to convert uranium ore to U3O8 yellowcake. That which is done at the point of mining is not subject to radiation control regulation, whereas any procedure thereafter that affects the gross appearance or chemical state of the "unrefined and unprocessed ore" is under the jurisdiction of the NRC (or Agreement States).

The federal Plain Writing Act of 2010 requires the federal government to write all new publications, forms, and publicly distributed documents in a "clear, concise manner". [PUBLIC LAW 111–274—OCT. 13, 2010, 124 STAT. 2861] [https://www.gpo.gov/fdsys/pkg/PLAW-111publ274/pdf/PLAW-111publ274.pdf]

In the final guidance for implementing the Act, the Administrator of the Office of Information and Regulatory Affairs, Office of Management and Budget, stated:

> *"As defined in the Act, plain writing is writing that is clear, concise, well-organized, and consistent with other best practices appropriate to the subject or field and intended audience. Such writing avoids jargon, redundancy, ambiguity, and obscurity."*
> [https://www.whitehouse.gov/sites/default/files/omb/memoranda/2011/m11-15.pdf]

The OMB memorandum further identified a number of benefits of plain writing, including:

> *Improving public understanding of government communication;*
> *Reducing the need for the public to seek clarification from agency staff;*
> *Improving public understanding of agency requirements and thereby assist the public in complying with them.*

The NRC has had a "plain language" program since, at least, 2000. The Executive Director for Communications for NRC, in a memorandum entitled Communication Activities, stated*:" The agency is committed to improving communication with the public and other agency stakeholders using plain language in documents and at public meetings…."*
[http://pbadupws.nrc.gov/docs/ML0037/ML003704675.pdf]
The State of Colorado has a similar goal of plain language interpretation.

> *"Under established Colorado judicial precedent, a statute should be interpreted so as to give consistent, harmonious, and sensible effect to all its parts, and its words and phrases should be given effect according to their plain and ordinary meaning*." In re Davisson, 797 P.2d 809 (Colo. App. 1990); People in Interest of J.L.R., 895 P.2d 1151 (Colo. App. 1995).

> *"Those interpreting statutes are not to presume that legislative body used language in a statute idly and with no intent that meaning should be given to its language."* Blue River Defense Comm. v. Town of Silverthorne, 33 Colo. App. 10, 516 P.2d 452 (1973). Rule 3.1.7(7)(b).

Based upon its description in the patent and company literature, the straightforward plain language of the guidance from NRC in HPPOS 184, and considering the many potential sites for its utilization, ablation technology is ***clearly not*** a component of conventional mining.

> ***"Mining*** *is the extraction of valuable minerals or other geological materials from the earth from an orebody, lode, vein, seam, or reef, which forms the mineralized package of economic interest to the miner".*
> [https://en.wikipedia.org/wiki/Mining]

Every dictionary definition of mining refers to the "extraction" or "removal" of the material of interest from the earth. This is acknowledged in HPPOS 184 by reference to the status of "unrefined and unprocessed ore…just after its removal from its place of deposit in nature" – the "point of mining". An activity that isolates and maximizes the quality of the ore during the extraction process, such as "split shot mining", is an inherent part of the mining operation – since it is conducted at the point of mining**.**

It is when uranium ore is subjected to **<u>any</u>** processing after the point of mining that the line is crossed from a mining operation to one which is subject to the radiation control regulations under NRC or Agreement State jurisdiction. "***Any processing***", as used in HPPOS 184, is a particularly broad phrase that expressly includes physical and/or chemical procedures that alter the gross appearance and/or the chemical state of the ore from its original state. For example, the act of crushing mined ore itself is a purely physical process that changes the gross appearance of the "unrefined and unprocessed ore".

When does uranium ore become source material?

> *"**Source Material** means uranium or thorium, or any combination of uranium or thorium, in any physical or chemical form, including ores that contain by weight one-twentieth of 1 percent (0.05 percent) or more of uranium, thorium or any combination thereof. Source material does not include special nuclear material."*
> [6 CCR 1007 Part 1, 10 CFR 40.4]

In October, 2012, in response to an inquiry from Tallahassee Area Community, Mr. Steve Tarlton – then Radiation Program Manager for the Department – made a preliminary determination of the regulatory status of the ablation process:

"We do recognize that the proposed process, if implemented as we now understand it, would result in the possession of source material and would, therefore, require a source material radioactive material license, at a minimum."
[Letter, Tarlton-CDPHE/Alter-TAC, October 16, 2012] (emphasis added)

Since radiation control regulations do not apply to uranium ore prior to processing, it is a logical and reasonable interpretation of Mr. Tarlton's statement that it is the **possession** of ore with the immediate and imminent **intent to process** that is the point at which the ore becomes source material

Is ablation technology source material processing?

The Tarlton determination was confirmed and expanded by NRC staff in a March 2013 letter:

"After review of the ablation process, it appears that the proposed surface ablation processing is an ore grinding or refining process that is subject to source material licensing under 10 CFR Part 40 (or Agreement State equivalent regulations). A source material license is required because the ablation process physically changes the ore… The ablation process would, at a minimum, be required to have a source material license. The NRC is also evaluating whether the application of this process to uranium recovery should be licensed as uranium milling. This determination coincides and supports Mr. Tarlton's statement."
[Letter, Duncan White-NRC/ Alter-TAC, March 20, 2013
[http://pbadupws.nrc.gov/docs/ML1307/ML13077A177.pdf]

Source material processing is a specific radiation control phrase that is simply ore processing, as it is understood in the mining industry in general, applied to uranium ore. The definition of ore processing is very broad: *"**Ore processing** - crushing and separating ore into valuable substances or waste by any of a variety of techniques **Synonyms:** beneficiation, mineral dressing, mineral extraction, mineral processing, ore dressing"*. [http://www.webster-dictionary.org/definition/ore%20processing].

The conventional process for transforming uranium ore into refined yellowcake consists of many individual processing steps beginning with the crushing or grinding step to reduce the ore to small, sand-like particles suitable for chemical conversion of the naturally occurring uranium compound in the ore to U3O8 (yellowcake).

Although the crushing or grinding of the mined ore to prepare it for the chemical leaching next step is usually done at a conventional uranium mill, that is not a requirement. As a preliminary, potentially economically beneficial, step the ablation process, as part of its function, produces the particle size desired.

That activity, by itself, takes ablation technology out of the mining operation jurisdiction and into radiation control regulation, even if done at a mine site. There are, however, additional processes incorporated into ablation technology. The reduced-size particles of ore are separated by gravity screening into the fine-grain and coarser-grain portions. The fine-grain material – the targeted economic component – contains the bulk of the uranium (the ablated concentrate) while the coarser-grain material is discarded as waste (gangue).

Beneficiation of uranium ore, which is acknowledged as source material processing subject to licensing, is defined in 40 CFR 261.4(b)(7) and specifically includes crushing and grinding of ore as well as other strictly physical ore processing activities

such as separating, sizing, screening, isolating, concentrating and the process of elutriation – all part of the ablation process.

Although this definition is part of the federal hazardous waste regulation and not the radiation control regulation, it is the most comprehensive definition available. The dictionary and encyclopedia definitions of beneficiation are very general; for example:

> "*In the mining industry* ***beneficiation*** *or* ***benefication*** *in extractive metallurgy, is any process which removes the gangue minerals from ore to produce a higher grade product (concentrate), and a waste stream (tailings). Some beneficiation processes are froth flotation and gravity separation*." https://en.wikipedia.org/wiki/Beneficiation

Is impact ablation a uranium milling activity?

An individual source material processing activity, of and by itself, is not necessarily a uranium milling activity. The definition of uranium milling is specific:

> "***Uranium milling*** *means* ***any activity*** *that results in the production of byproduct material, as defined in Part 18"*
>
> "***Byproduct material*** *... means the tailings or wastes produced by the extraction* ***or*** *concentration of uranium or thorium from* ***any ore*** *primarily for its source material content, including discrete surface wastes resulting from uranium solution extraction processes. Underground ore bodies depleted by such solution extraction operations do not constitute "byproduct material," within this definition".*
> [6 CCR 1007-1, Section 18.2, emphasis added], [See also 10 CFR 40.4]

Certain specific source material processing and licensable activities that are inherent parts of the overall process to produce yellowcake do not produce waste (therefore no "byproduct material") such as ore buying, ore sorting, and crushing or grinding ore. Although these activities are usually part of a conventional uranium milling operation, when they take place outside of the confines of a "mill" they are licensable but not as a "uranium milling activity".

On the other hand, ablation technology by its very nature produces waste. It is a process which, in the very words of the encyclopedia definition of beneficiation, ***"removes the gangue minerals from ore to produce a higher grade product (concentrate) and a waste stream (tailings)."***

The solid waste stream –approximately 90% of the original ore mass – is essentially the same wet sandy mixture of residual uranium, radium, and other heavy metals as found in the tailings from a conventional mill except for lacking the acids utilized in the leaching process. It is byproduct material**.**

The fact that the uranium compound found in ablation waste is unchanged from the original ore rather than the chemically converted U3O8 is not significant with respect to the definition of byproduct material. That definition refers to "the concentration of uranium" from "any ore for its source material content". The "ablated concentrate" is the targeted source material content. The radioactivity from the residual uranium and the accompanying radium decay product in the waste, and the potential for radon emission generation, is the same from ablation waste as for conventional mill tailings and requires the same human health and safety considerations.

Similarly, the recovered process water meets the definition of byproduct material following any potential recycling through the ablation process. If the water is subjected to the ion-exchange process to recover the dissolved uranium resulting from the partial

chemical conversion of the ore, it would meet the definition of source material in the same manner as ISL leachate, and the depleted water would be byproduct material.

In the 2002 NRC Office of General Counsel document entitled *Uranium Milling Activities at Sequoyah Fuels Corporation*, the question of "What Constitutes Uranium Milling" was considered:

> "A fundamental, plain-language, working definition of uranium milling can be constructed from the somewhat circular references contained in the ... regulatory definitions (in 10 CFR 40.4, of uranium milling, byproduct material and source material): *Uranium milling is an activity or series of processes that extracts or concentrates uranium or thorium from any ore primarily for its source material content, and the resulting tailings or waste are 11e.(2) byproduct material."*
> [http://www.nrc.gov/reading-rm/doc-collections/commission/secys/2002/secy2002-0095/2002-0095scy.pdf]
> [See attachment 5]

The OGC document further discussed non-conventional milling and milling at multiple locations. It stated: *"Non-conventional processing ... comprise other technologies.... The distinction among nonconventional milling activities is that these activities often occur at locations other than a uranium mill.... Uranium milling entails many processing steps, which ... are not required to occur at a single location, but often do."*

Colorado Agreement State Implications

The Agreement between the NRC and the State of Colorado requires coordination of their radiation programs. Article V of the Agreement states:

"The Commission will use its best efforts to cooperate with the State and other agreement States in the formulation of standards and regulatory programs of the State and the Commission for protection against hazards of radiation and to assure that State and Commission programs for protection against hazards of radiation will be coordinated and compatible. The State will use its best efforts to cooperate with the Commission and other agreement States in the formulation of standards and regulatory programs of the State and the Commission for protection against hazards of radiation and to assure that the State's program will continue to be compatible with the program of the Commission for the regulation of like materials. The State and the Commission will use their best efforts to keep each other informed of proposed changes in their respective rules and regulations and licensing, inspection and enforcement policies and criteria, and to obtain the comments and assistance of other party thereon."
[ARTICLES OF AGREEMENT BETWEEN THE UNITED STATES ATOMIC ENERGY COMMISSION AND THE STATE OF COLORADO FOR DISCONTINUANCE OF CERTAIN COMMISSION REGULATORY AUTHORITY AND RESPONSIBILITY WITHIN THE STATE PURSUANT TO SECTION 274 OF THE ATOMIC ENERGY ACT OF 1954, AS AMENDED, ARTICLE V]

To date, although NRC has offered assistance to Colorado in the development of regulations governing ablation technology if requested, it has not completely formulated its own position about the technology. It has, however, suggested that there are many areas of concern regarding the health and safety aspects of the technology as disclosed in its response to an inquiry from the Department following the submission of the Ablation White Paper by Black Range Minerals in July 2015.
[http://pbadupws.nrc.gov/docs/ML1525/ML15251A164.pdf

V. CONCLUSION

Ablation technology has applicability in many jurisdictions other than Colorado -- Agreement States as well as those states under NRC jurisdiction. The language of Article V of the Colorado Agreement appears to require that NRC would have to make a formal determination of the regulatory status of the technology and develop appropriate regulations and/or guidance of its own prior to any final state action.

Impact Ablation Technology is not part of any mining operation. When considered in the plain language context of the relevant definitions and the NRC guidances discussed above, it must be recognized as a non-conventional uranium milling activity regardless of where it may be located. As such, it is licensable as uranium milling and is subject to Part 18 of the Colorado Radiation Control Regulations including the relevant criteria itemized in Appendix A.

US 20130068863A1

(19) United States

(12) Patent Application Publication

Coates et al.

(10) Pub. No.: US 2013/0068863 A1

(43) Pub. Date: Mar. 21, 2013

(54) **DEVICES, SYSTEMS, AND METHODS FOR PROCESSING HETEROGENEOUS MATERIALS**

(75) Inventors: **James A. Coates**, Casper, WY (US); **David H. Scriven**, Casper, WY (US); **Charles Coates**, Renton, WA (US); **Eric Coates**, Casper, WY (US)

(73) Assignee: **ABLATION TECHNOLOGIES, LLC**, Casper, WY (US)

(21) Appl. No.: **13/614,802**

(22) Filed: **Sep. 13, 2012**

Related U.S. Application Data

(60) Provisional application No. 61/535,253, filed on Sep. 15, 2011, provisional application No. 61/593,741, filed on Feb. 1, 2012.

Publication Classification

(51) **Int. Cl.**

B02C 19/06 (2006.01)

B02C 23/08 (2006.01)

(52) **U.S. Cl.**

USPC **241/5**; 241/39; 241/40

(57) **ABSTRACT**

A system for processing a heterogeneous material includes a conduit for a pressurized fluid and a nozzle assembly in fluid communication with the conduit. The nozzle assembly includes a plurality of adjustable nozzles configured such that streams of heterogeneous material passing through each nozzle intersect after passing through the adjustable nozzles. Another system includes a conduit for a pressurized fluid, a nozzle assembly, and a separation system configured to separate particles of a heterogeneous material into a first fraction and a second fraction. The nozzle assembly includes an adjustable nozzle configured such that a stream of the heterogeneous material passing through the nozzle contacts a surface after passing through the nozzle. A method of processing a heterogeneous material includes entraining heterogeneous particles into a fluid stream, passing the fluid stream through at least one adjustable nozzle, impacting the fluid stream to ablate the heterogeneous particles, and classifying the heterogeneous particles.

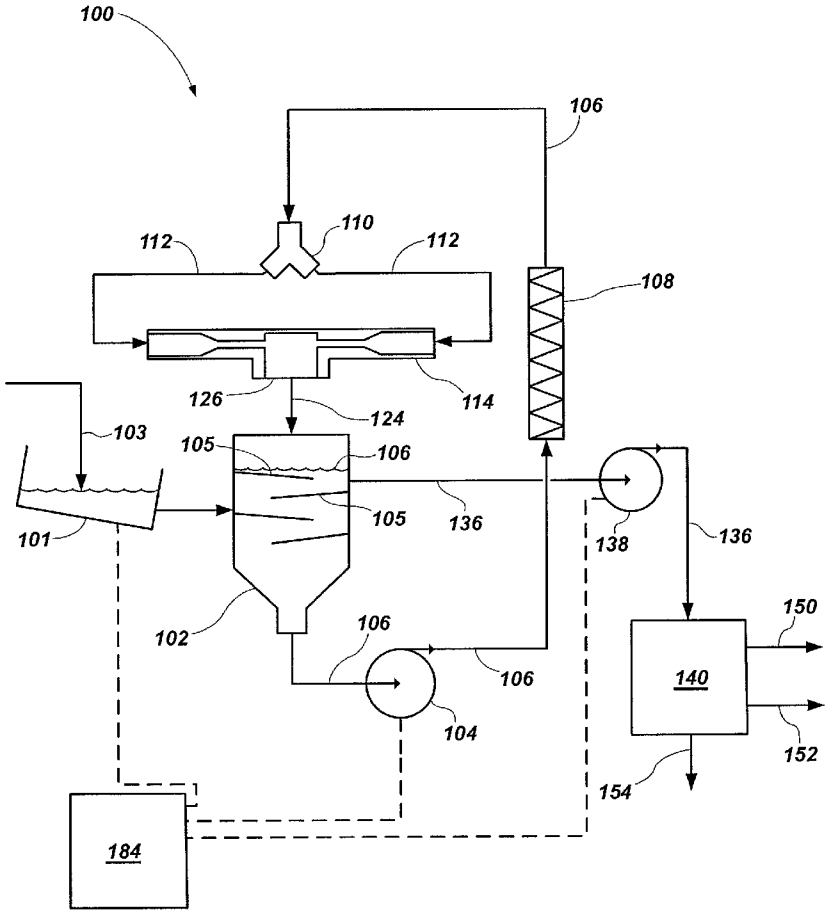

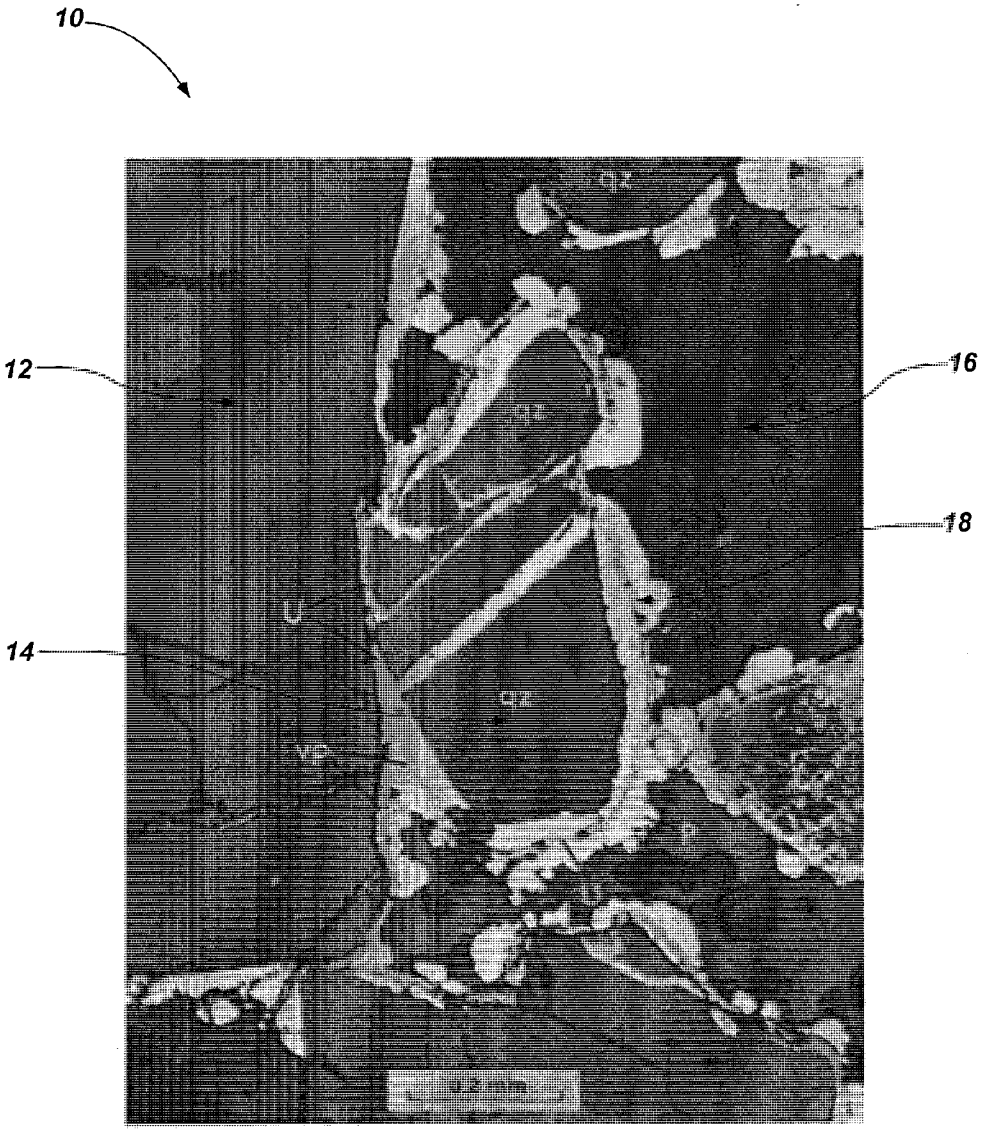

FIG. 1
(PRIOR ART)

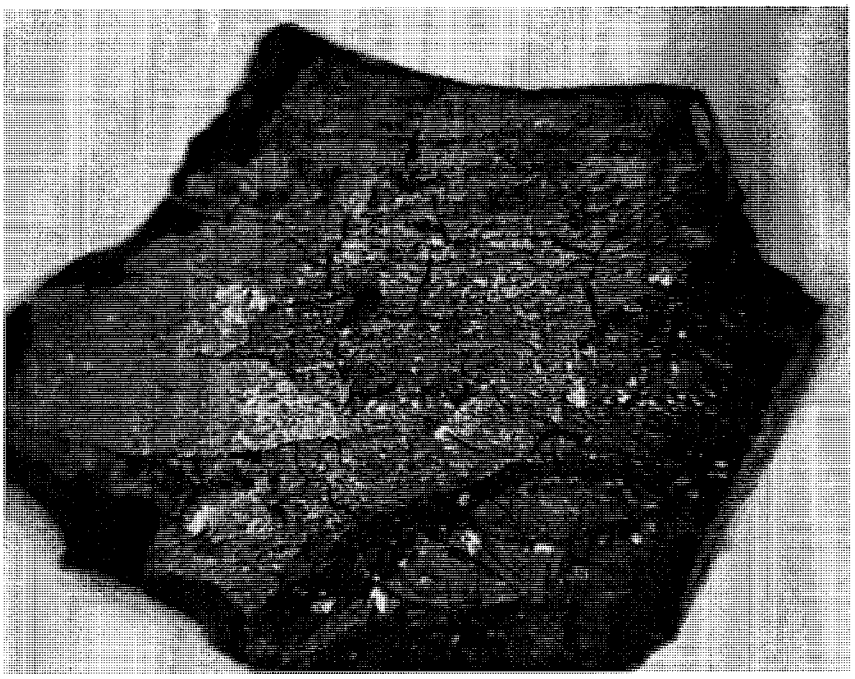

FIG. 2

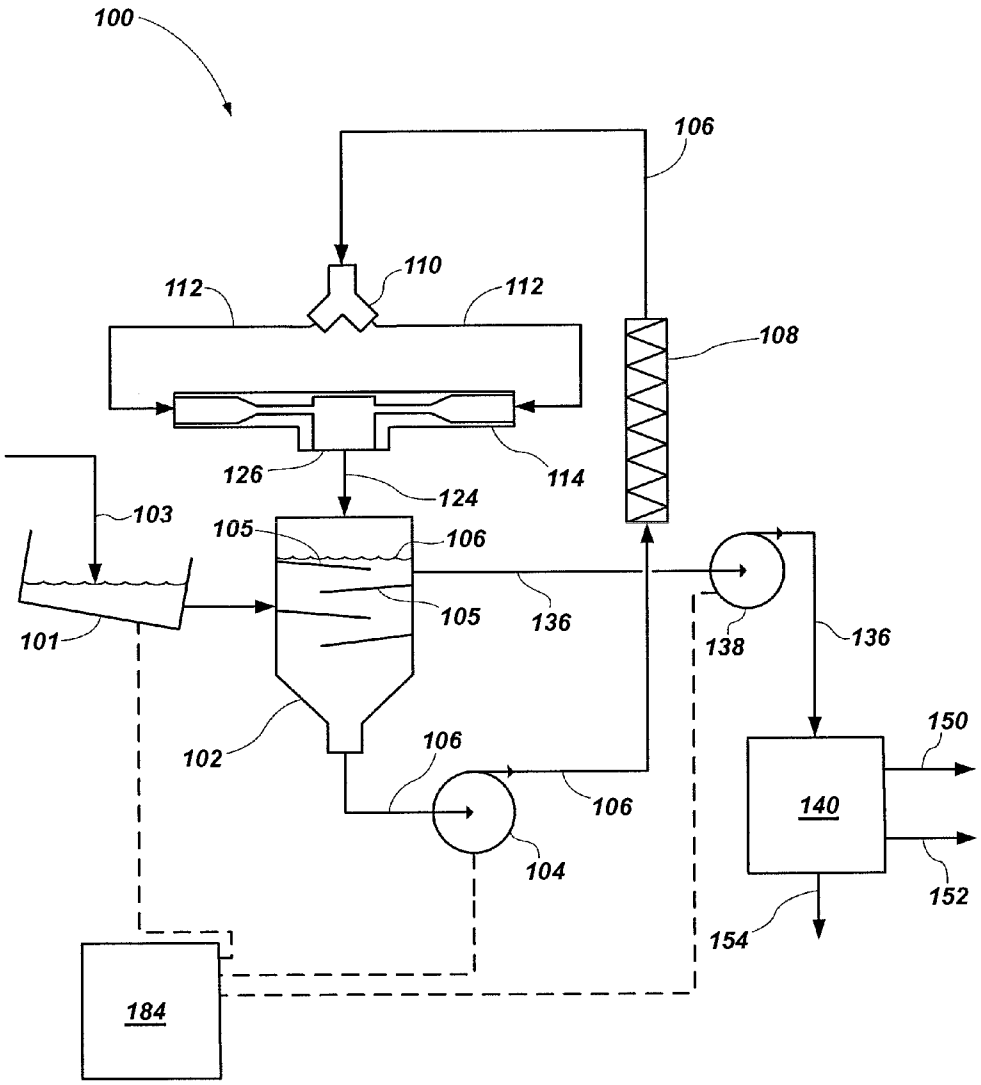
100
106
110
112
112
108
126
124
114
103
105
106
105
136
101
138
136
102
106
150
106
140
104
152
154
184

FIG. 3

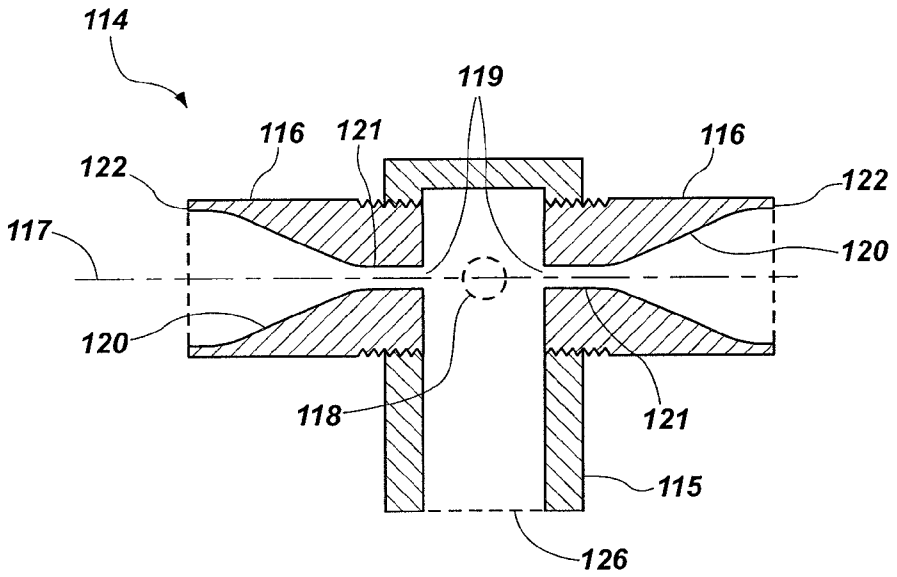
114
119
116
121
116
122
122
117
120
120
118
121
115
126

FIG. 4

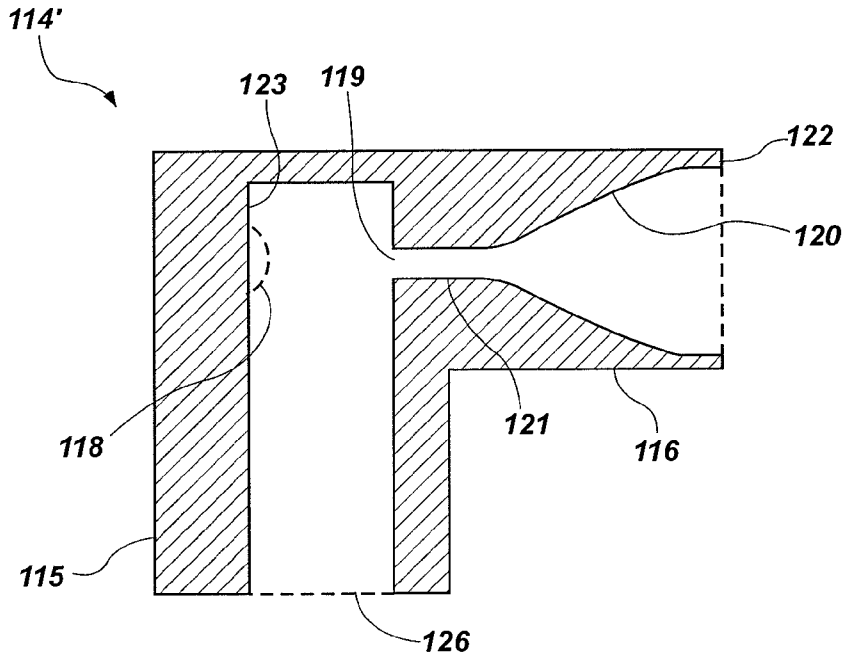
114'
123
119
122
120
118
121
116
115
126

FIG. 5

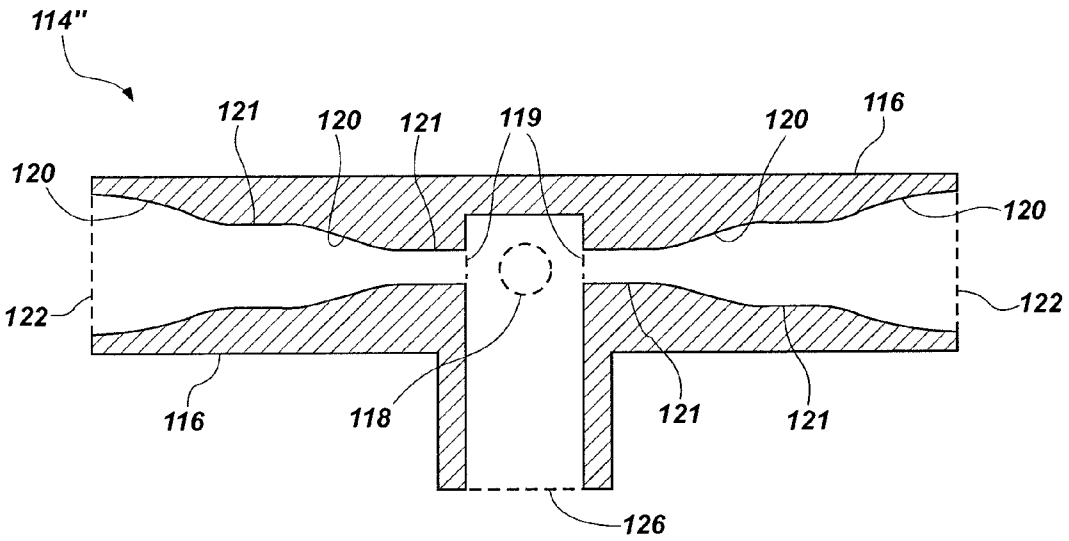
114"
121
120
121
119
120
116
120
120
122
122
116
118
121
121
126

FIG. 6

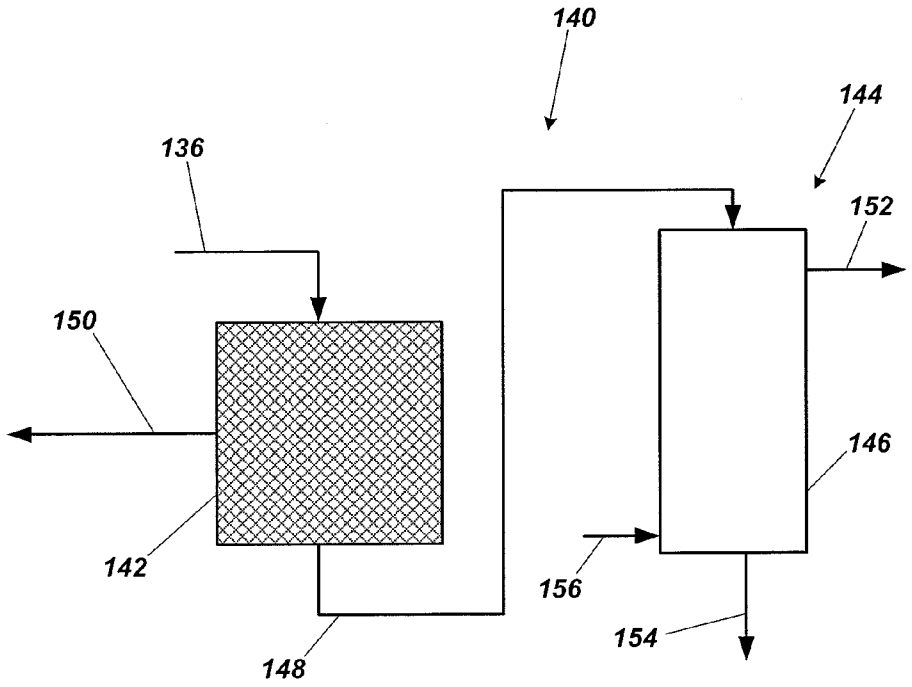
140
144
136
152
150
146
142
156
154
148

FIG. 7

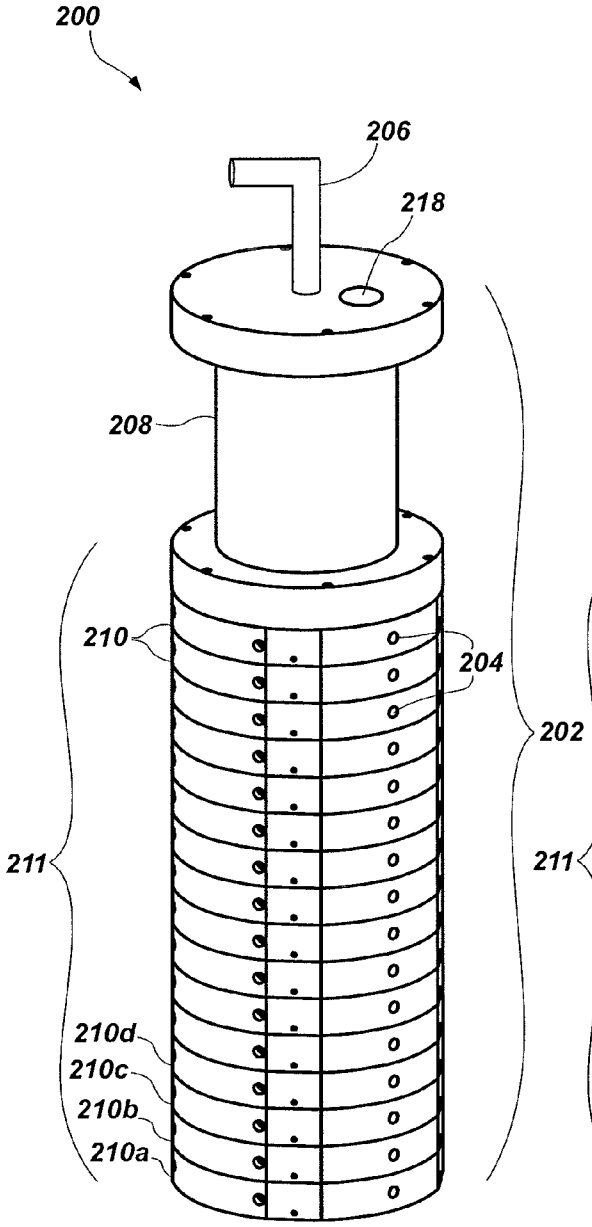
200
206
218
208
210
204
202
211
210d
210c
210b
210a

FIG. 8

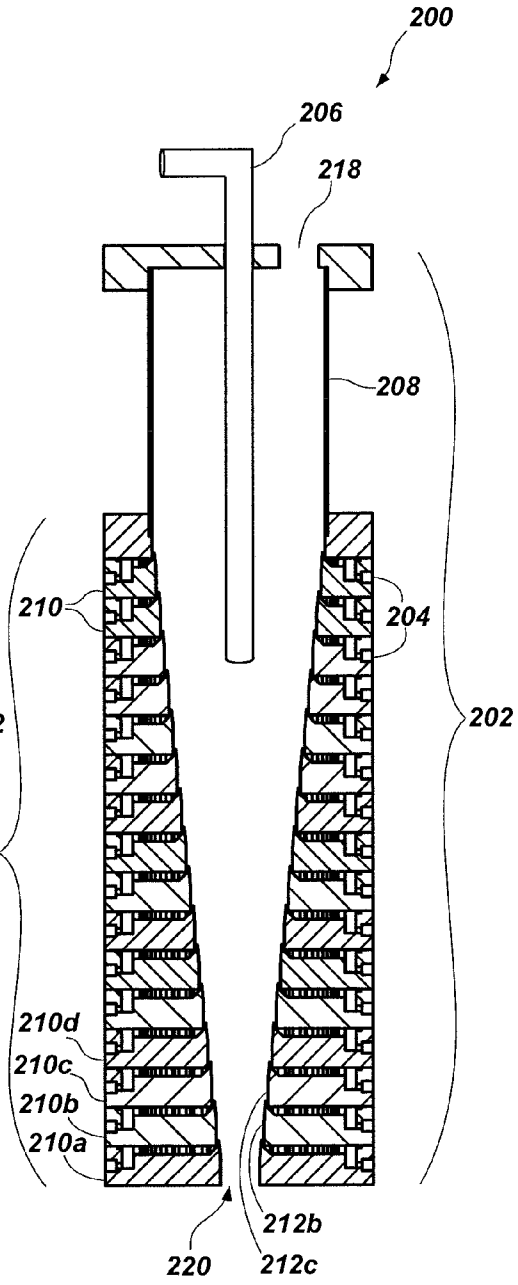
200
206
218
208
210
204
202
211
210d
210c
210b
210a
220
212b
212c

FIG. 9

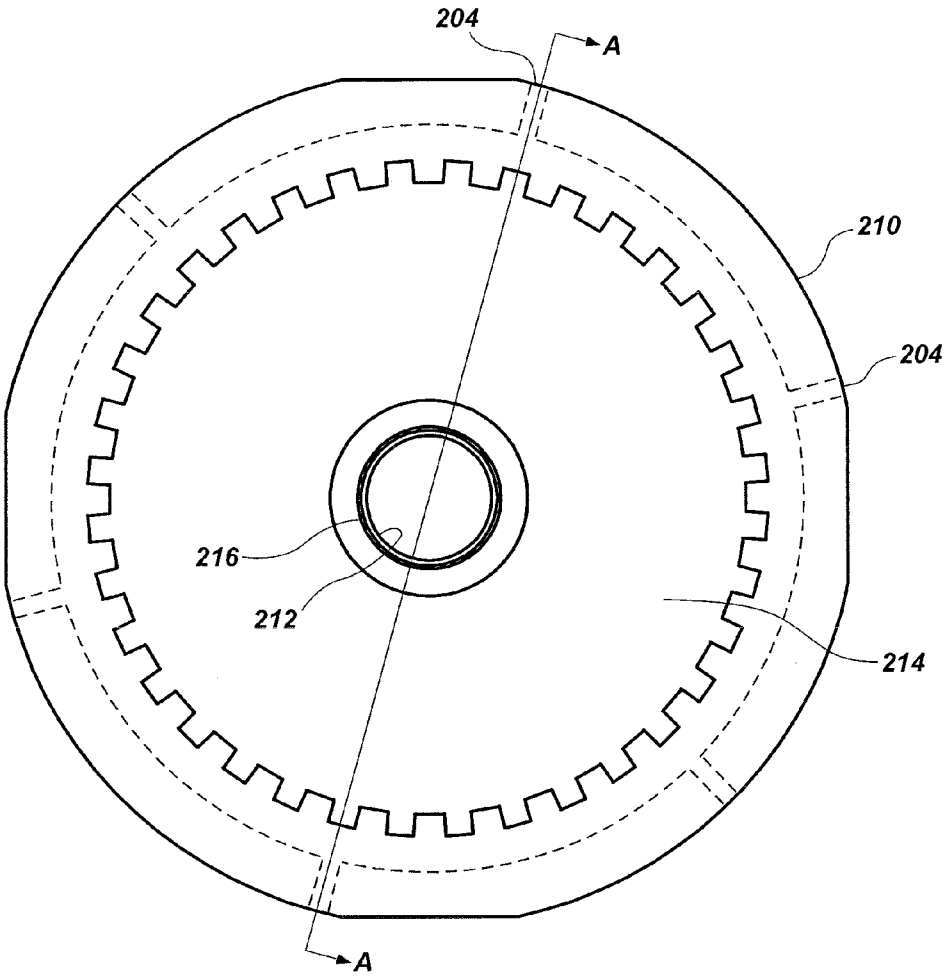

FIG. 10

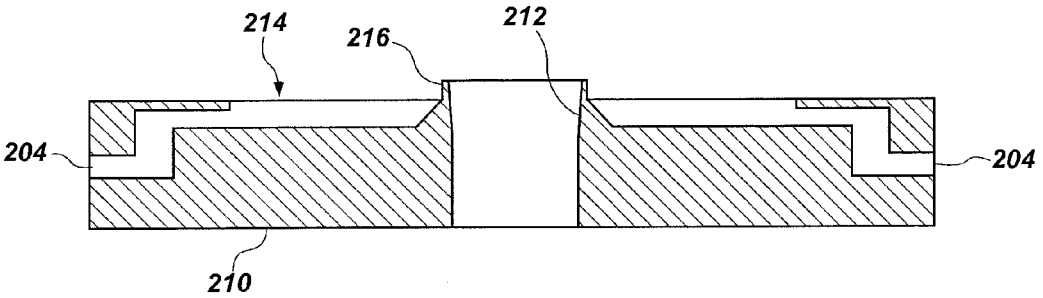

FIG. 11

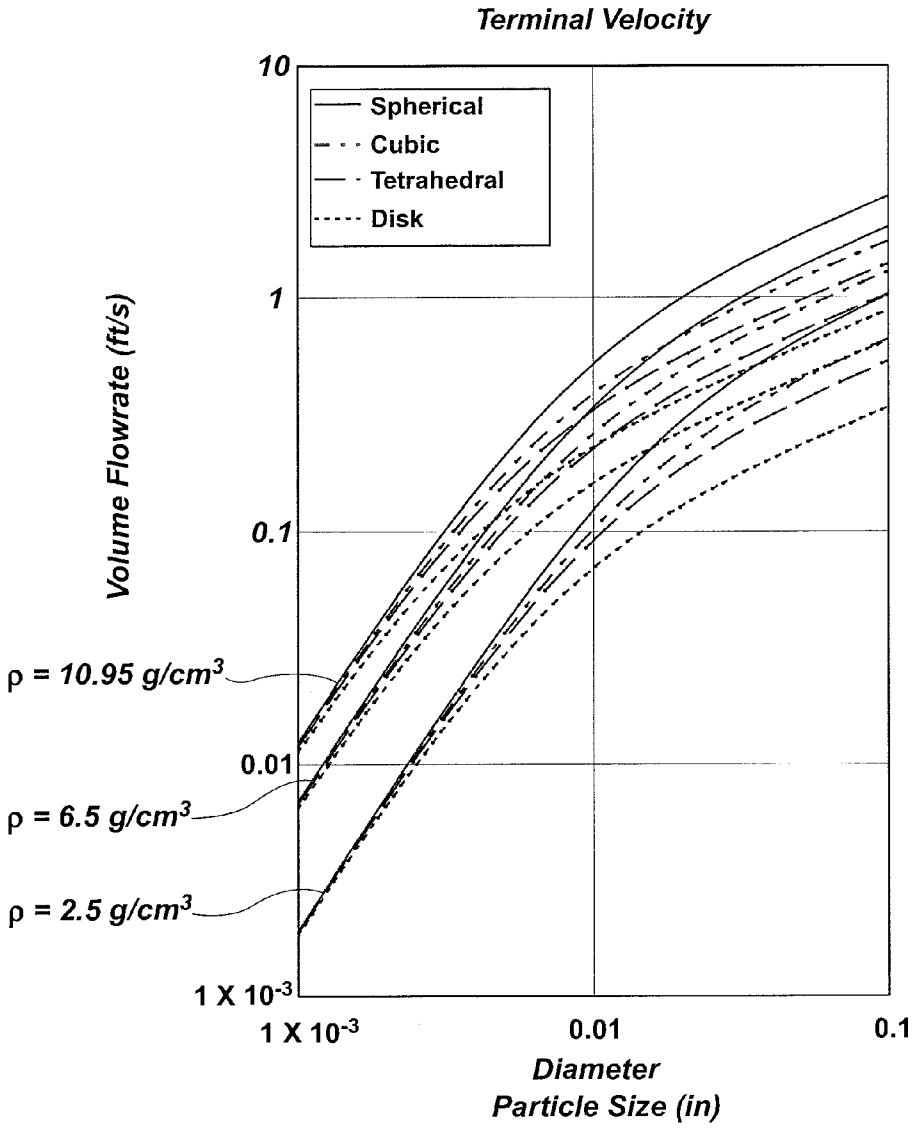
Terminal Velocity
10
1
0.1
0.01
1 X 10-3
Volume Flowrate (ft/s)
Spherical
Cubic
Tetrahedral
Disk
ρ = 10.95 g/cm3
ρ = 6.5 g/cm3
ρ = 2.5 g/cm3
1 X 10-3
0.01
0.1
Diameter
Particle Size (in)

FIG. 12

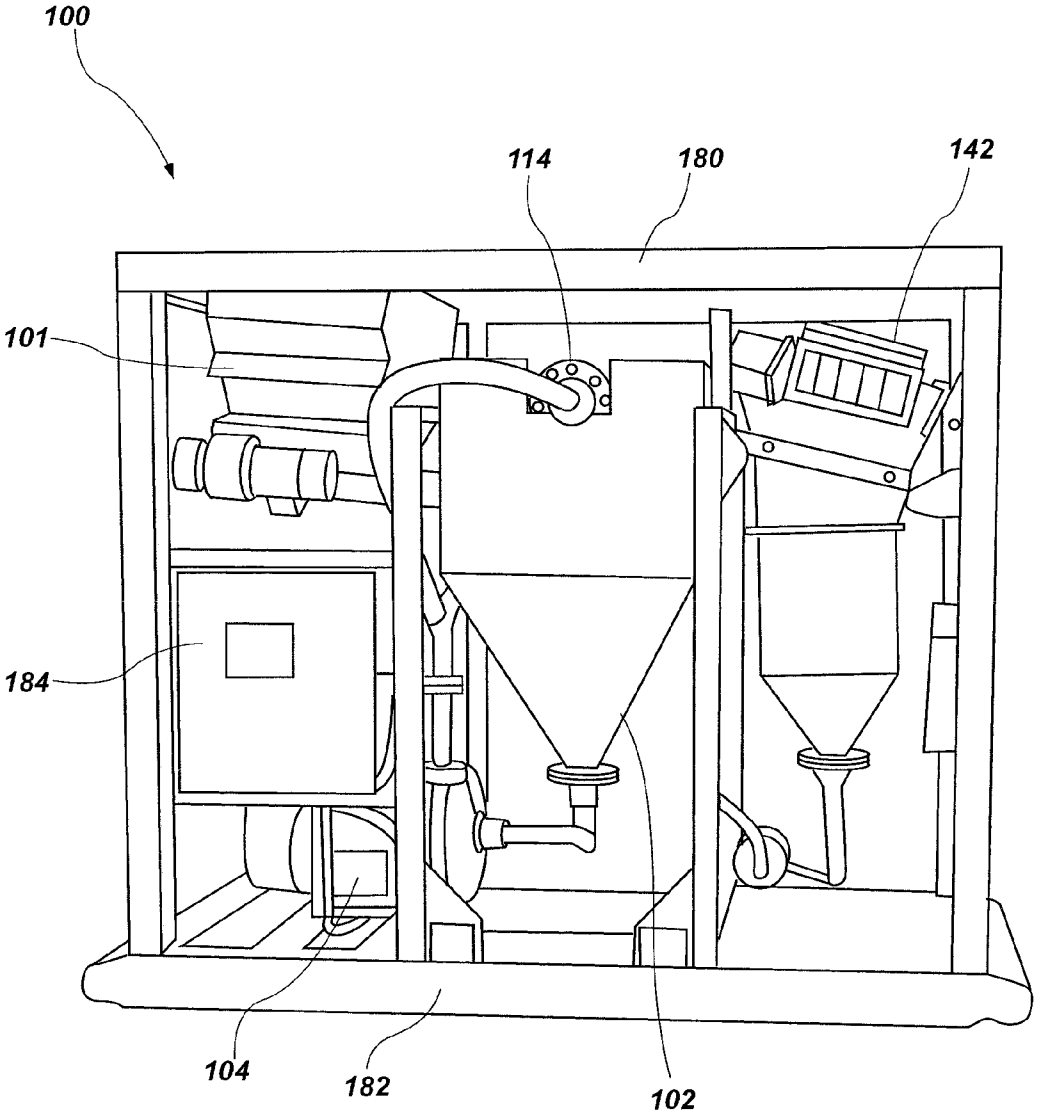

FIG. 13

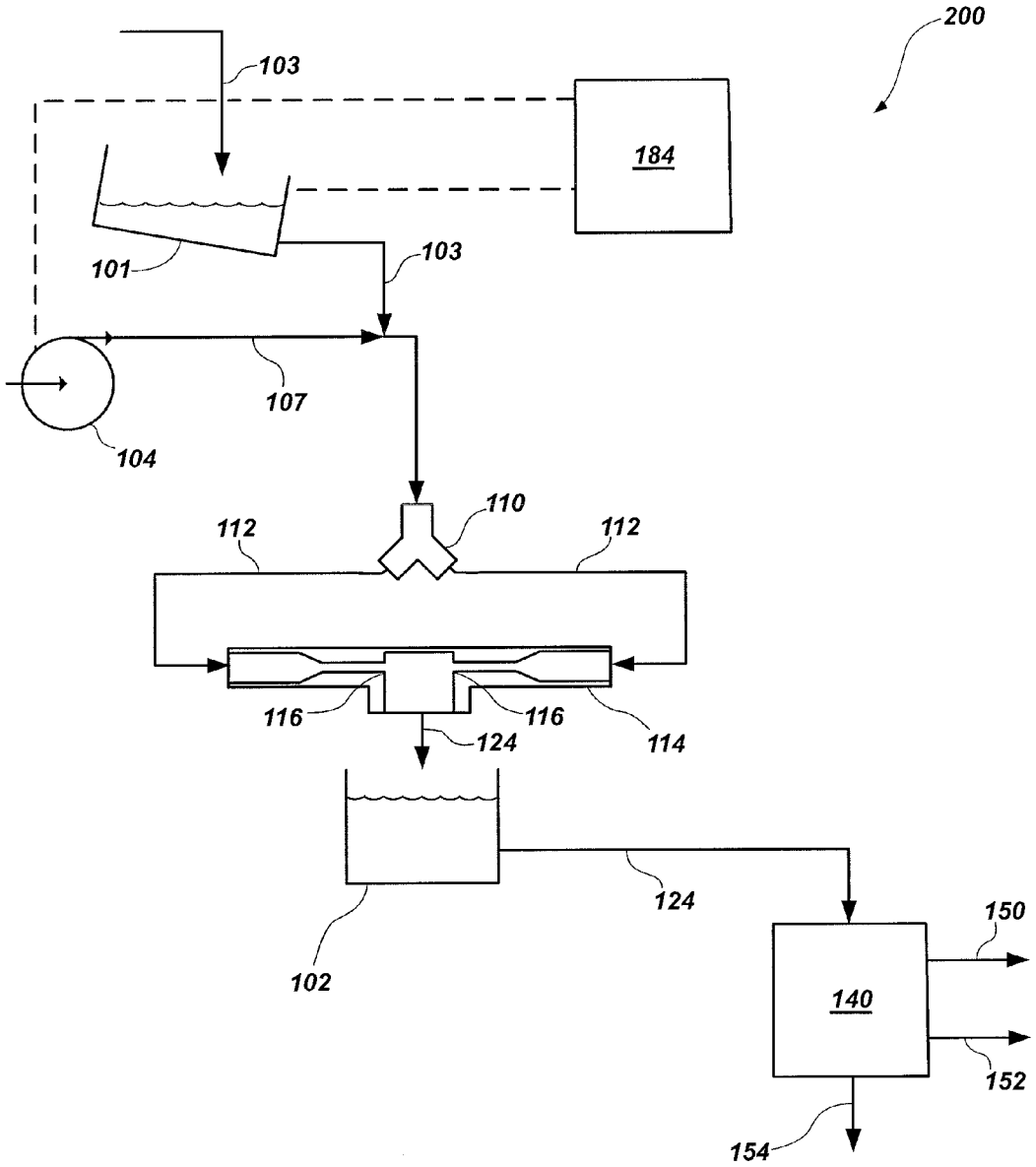
200
103
184
101
103
107
104
110
112
112
116
116
124
114
124
102
150
140
152
154

FIG. 14

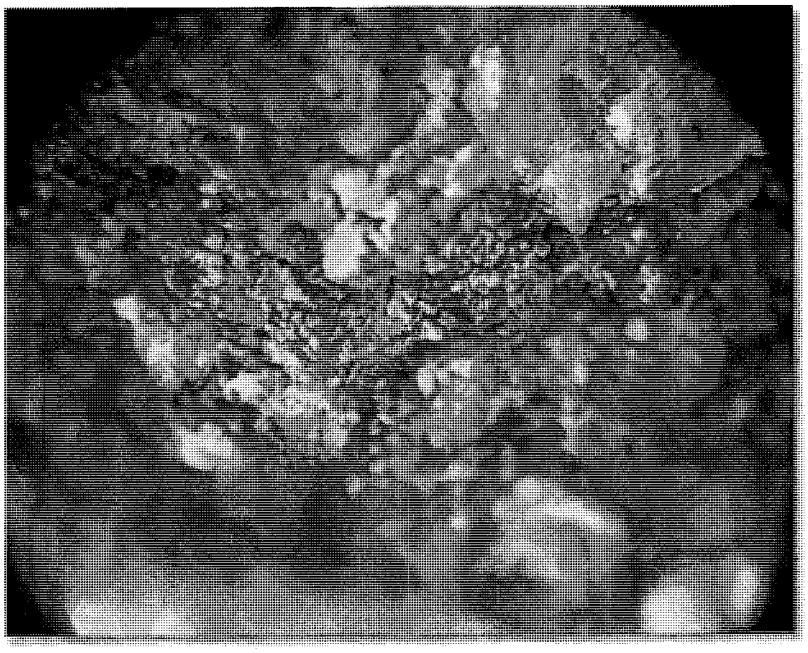

FIG. 15

FIG. 16

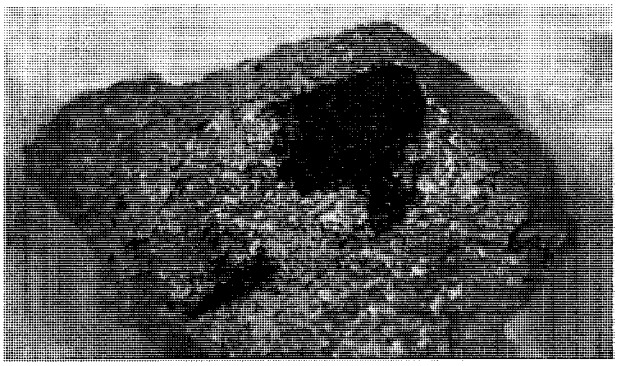

FIG. 17

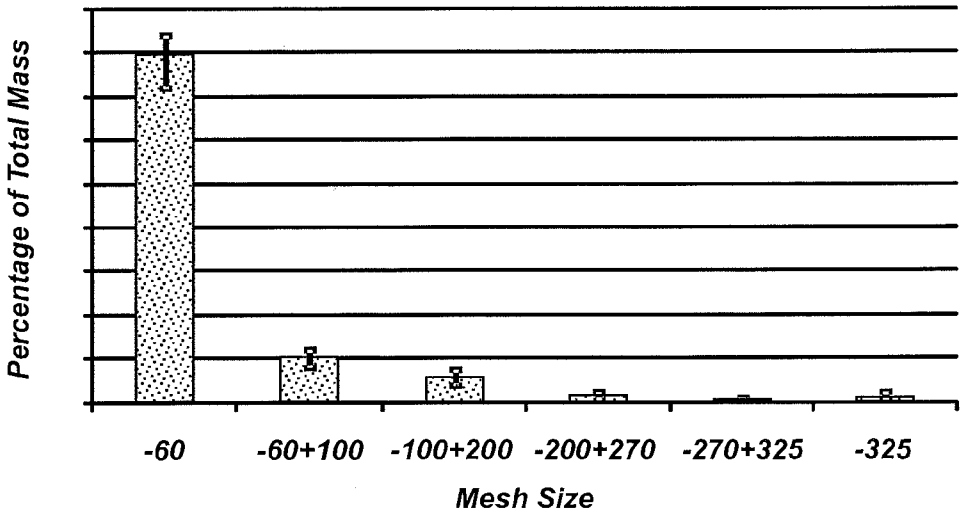
Percentage of Total Mass
-60
-60+100
-100+200
-200+270
-270+325
-325
Mesh Size

FIG. 18

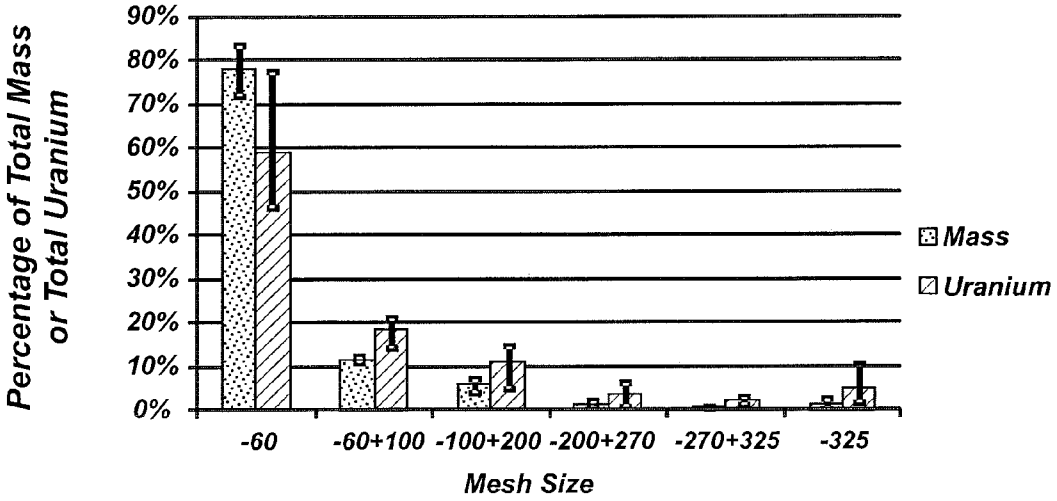
Percentage of Total Mass or Total Uranium
90%
80%
70%
60%
50%
40%
30%
20%
10%
0%
-60
-60+100
-100+200
-200+270
-270+325
-325
Mesh Size
Mass
Uranium

FIG. 19

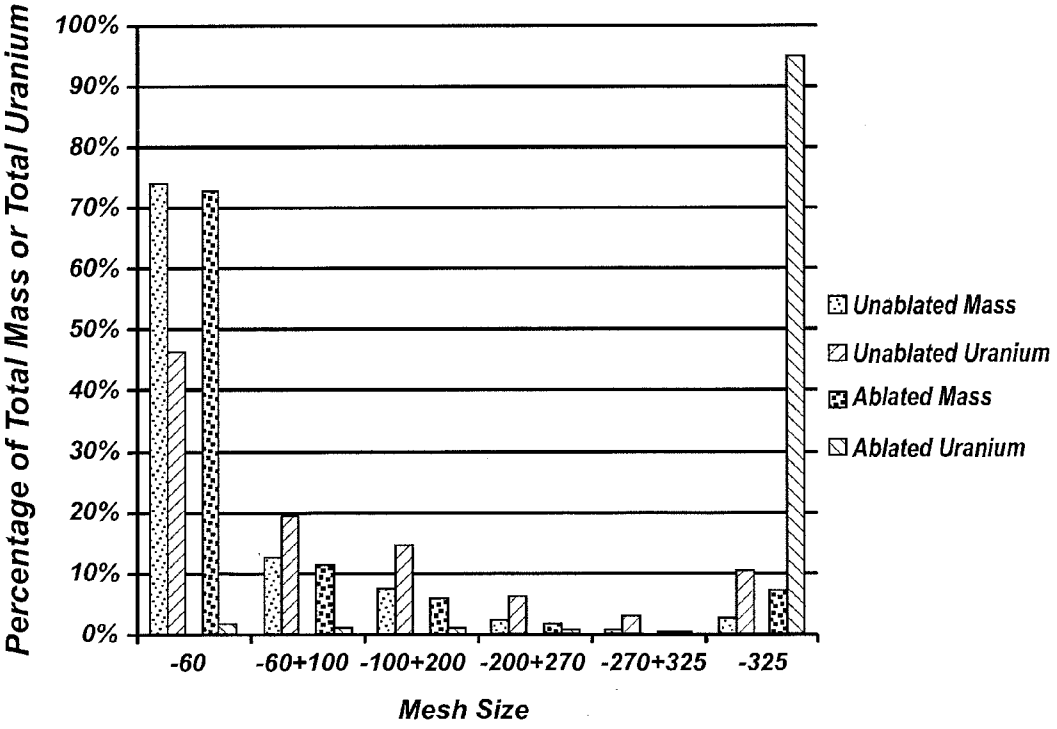
Percentage of Total Mass or Total Uranium
100%
90%
80%
70%
60%
50%
40%
30%
20%
10%
0%
-60
-60+100
-100+200
-200+270
-270+325
-325
Mesh Size
Unablated Mass
Unablated Uranium
Ablated Mass
Ablated Uranium

FIG. 20

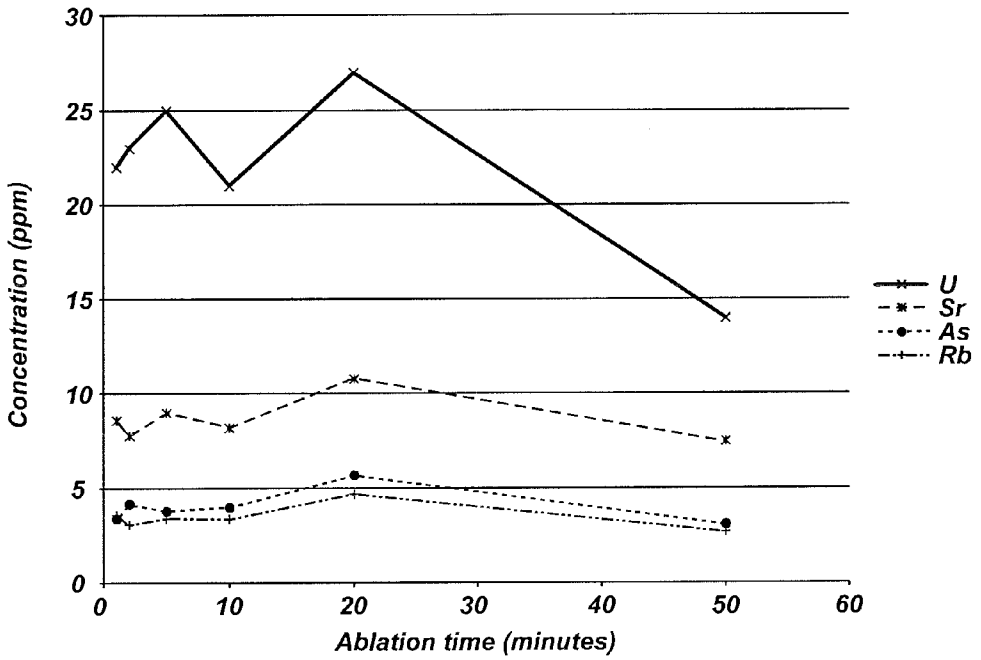
30
25
20
15
10
5
0
Concentration (ppm)
0
10
20
30
40
50
60
Ablation time (minutes)
U
Sr
As
Rb

FIG. 21

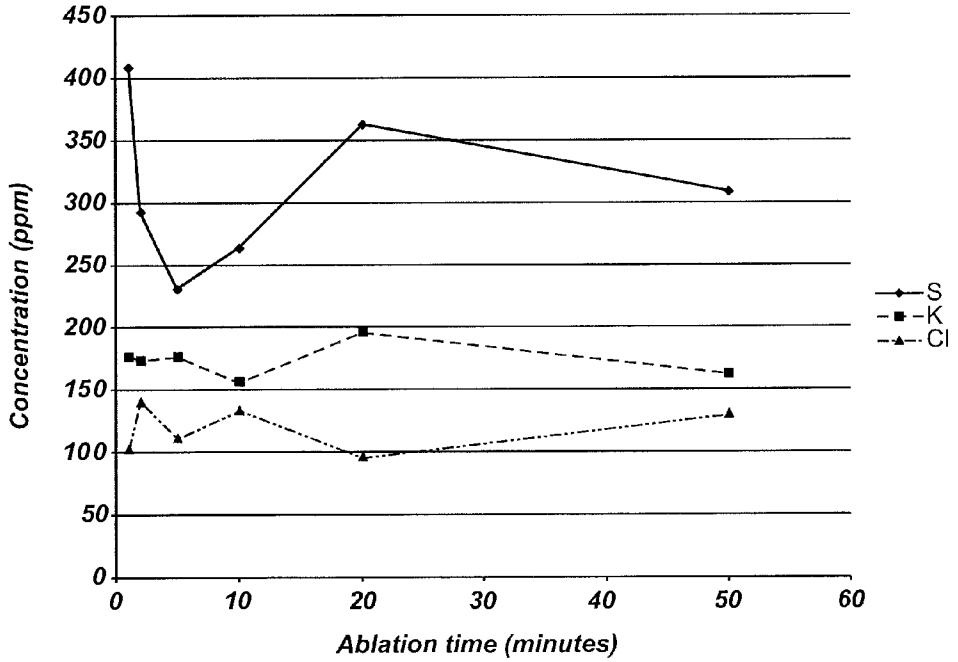
450
400
350
300
250
200
150
100
50
0
Concentration (ppm)
0
10
20
30
40
50
60
Ablation time (minutes)
S
K
Cl

FIG. 22

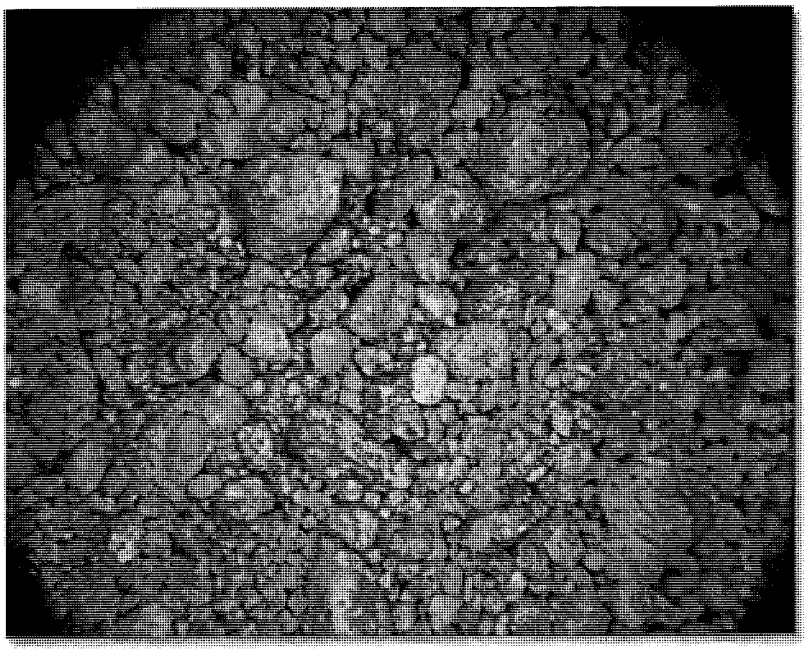

FIG. 23

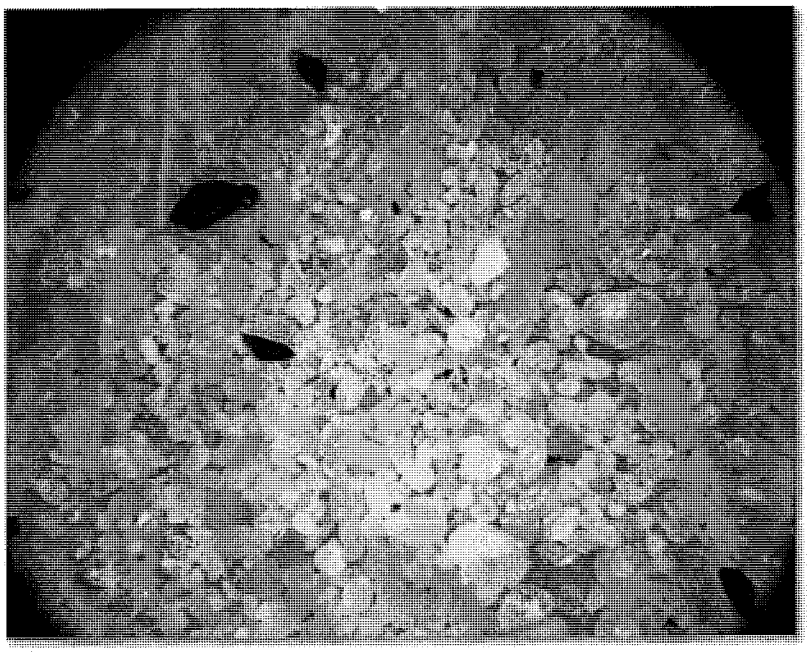

FIG. 24

DEVICES, SYSTEMS, AND METHODS FOR PROCESSING HETEROGENEOUS MATERIALS

CROSS-REFERENCE TO RELATED APPLICATIONS

[0001] This application claims the benefit of U.S. Provisional Patent Application Ser. No. 61/535,253, filed Sep. 15, 2011, and entitled "Devices, Systems, and Methods for Processing Heterogeneous Materials" and U.S. Provisional Patent Application Ser. No. 61/593,741, filed Feb. 1, 2012, and entitled "Methods for Processing Heterogeneous Materials" the disclosures of each of which are incorporated herein in their entireties by this reference.

FIELD

[0002] The present disclosure relates generally to processing heterogeneous materials, such as ores or oil-contaminated sands, to separate the materials into discrete components.

BACKGROUND

[0003] Heterogeneous materials, such as heterogeneous solid materials, occur naturally and may also be formed by man-made processes. For example, naturally occurring ores may include volumes containing a material of interest (i.e., a so-called "bearing fraction"), such as a metal or a mineral, mixed with volumes not containing the material of interest (i.e., a so-called "non-bearing fraction"). Recovery of the material of interest generally requires physical or chemical separation of the bearing fraction from the non-bearing fraction. Chemical separation may require reagents (e.g., cyanide, acids, carbonates), which may be expensive or raise environmental challenges.

[0004] As one example of a heterogeneous material, uranium is typically found in nature as uranium ore. Low-grade uranium ore may contain any form of uranium-containing compounds in concentrations up to about 5 lbs of U_3O_8 equivalent per ton of ore (about 2.5 kg of U_3O_8 equivalent per 1000 kg of ore, or about 0.25% uranium oxides by weight), whereas higher grade ore may contain uranium-containing compounds in concentrations of about 8 lbs of U_3O_8 equivalent per ton of ore (about 4.0 kg of U_3O_8 equivalent per 1000 kg of ore, or about 0.4% uranium oxides by weight), about 30 lbs of U_3O_8 equivalent per ton of ore (about 15 kg of U_3O_8 equivalent per 1000 kg of ore, or about 1.5% uranium oxides by weight) or more.

[0005] Uranium deposits may be formed in sandstone by erosion and redeposition. For example, an uplift may raise a uranium-bearing source rock and expose the source rock to the atmosphere. The source rock may then erode, forming solutions of uranium and secondary minerals. The solutions may migrate along the surface of the earth or through permeable subsurface channels into a sandstone formation, stopping at a structural or chemical boundary. Uranium minerals may then be deposited as a patina or coating around or between grains of the formation. Uranium may also be present in carbonaceous materials within sandstone. Uranium may be all or a portion of the cementing material between grains of the formation.

[0006] FIG. **1** shows a section photomicrograph of sandstone formations from the Shirley Basin in Central Wyoming. As shown in FIG. **1**, uranium-bearing sandstone **10** may include various constituents. In general, oversize material **12** may be defined as relatively large particles or fragments, such as homogeneous particles of host rock. Oversize material **12** may also be defined as particles larger than can be processed in a particular processing system. For example, in some sandstone **10**, oversize material **12** may include cobbles and stones arbitrarily defined as material having an average diameter larger than about 0.25 inches (in.) (6.35 mm). Oversize materials **12** in sandstone **10** generally do not contain much uranium. Grains **14** may generally be defined as particles or fragments smaller than oversize material **12**. Grains **14** may include particles having diameters from about 400-mesh (i.e., about 0.0015 in. or about 0.037 mm) to about 0.25 in. (6.35 mm), and may include quartz or feldspar. Grains **14** in sandstone **10** do not typically contain much uranium, but uranium may be formed around the grains **14** due to deposition. Fines may be generally defined as particles disposed among the oversize material **12** and the grains **14**, and may include materials also found in the grains **14** and oversized material **12**, such as uranium, quartz, feldspar, etc. Fines may cement the oversize material **12** and the grains **14** into a solid mass. Fines in uranium-bearing sandstone **10** (e.g., particles smaller than about 400-mesh) may include light fines **16** and heavy fines **18**. Light fines **16** generally have a specific gravity up to about 4.0 with reference to water, whereas heavy fines **18** have a specific gravity greater than about 4.0. Uranium compounds are generally components of the heavy fines **18**, but may also be a part of light fines **16** in the form of deposits on carbonaceous materials. For example, uraninite has a specific gravity from about 6.5 to about 10.95, depending on its degree of oxidation, and coffinite has a specific gravity of about 5.4. Both light fines **16** and heavy fines **18** may be bound to grains **14** in the sandstone **10**. In the sandstone **10**, the oversize material **12**, grains **14**, light fines **16**, and heavy fines **18** may be combined into a single mass.

[0007] Uranium may conventionally be recovered through in-situ recovery (ISR), also known in the art as in-situ leaching (ISL) or solution mining. In ISR, a leachate or lixiviant solution is pumped into an ore formation through a well. The solution permeates the formation and dissolves a portion of the ore. The solution is extracted through another well and processed to recover the uranium. Reagents used to dissolve uranium of the ore may include an acid or carbonate. ISR may have various environmental and operational concerns, such as mobilization of uranium or heavy metals into aquifers, footprint of surface operations, interconnection of wells, etc. ISR typically requires particular reagents, which must be supplied, recovered, and treated. Because ISR relies on the subsurface transport of a solution, ISR cannot generally be used in formations that are impermeable or shallow.

[0008] Uranium may also conventionally be mined in underground mines or surface mines (e.g., strip mines, open-pit mines, etc.). During such mining activities, it may be necessary to process large quantities of material having a concentration of uranium too low for economic recovery by conventional processes. Such material (e.g., overburden) may be treated as waste or as a material for use in mine reclamation. Conventional mining may produce significant amounts of such low-concentration material, which may require treatment during or subsequent to mining operations. It would therefore be advantageous to provide a method of uranium recovery that minimizes or alleviates these concerns.

SUMMARY

[0009] In some embodiments, a system for processing a heterogeneous material includes a conduit for a pressurized fluid and a nozzle assembly in fluid communication with the conduit. The nozzle assembly includes a plurality of adjustable nozzles configured such that streams comprising a heterogeneous material passing through each of the plurality of adjustable nozzles intersect after passing through the plurality of adjustable nozzles.

[0010] In other embodiments, a system includes a conduit for a pressurized fluid, a nozzle assembly in fluid communication with the conduit, and a separation system configured to separate particles of a heterogeneous material into a first fraction and a second fraction. The nozzle assembly includes an adjustable nozzle configured such that a stream of the heterogeneous material passing through the adjustable nozzle contacts a surface approximately perpendicular to the surface after passing through the nozzle. The particles of the first fraction have a first average property, and the particles of the second fraction have a second average property different from the first average property.

[0011] In certain embodiments, a method of processing a heterogeneous material includes entraining heterogeneous particles of a material into a fluid stream, passing the fluid stream through at least one adjustable nozzle, impacting the fluid stream to ablate the heterogeneous particles of the material, and classifying the heterogeneous particles.

BRIEF DESCRIPTION OF THE DRAWINGS

[0012] While the specification concludes with claims particularly pointing out and distinctly claiming what are regarded as embodiments of the present disclosure, various features and advantages of embodiments of the present disclosure may be more readily ascertained from the following description of some embodiments of the present disclosure when read in conjunction with the accompanying drawings, in which:

[0013] FIG. **1** is a photomicrograph of uranium ore in a sandstone formation;

[0014] FIG. **2** is a photomicrograph of a carbonaceous material;

[0015] FIG. **3** is a simplified schematic illustrating an embodiment of a system for processing a heterogeneous material;

[0016] FIG. **4** is an enlarged cross-sectional view of a nozzle assembly as shown in the system of FIG. **3**;

[0017] FIGS. **5** and **6** are enlarged cross-sectional views of nozzle assemblies of additional embodiments of the present disclosure;

[0018] FIG. **7** is a simplified schematic illustrating a portion of the system shown in FIG. **3**;

[0019] FIG. **8** is a simplified view of an embodiment of an elutriator;

[0020] FIG. **9** is a simplified cross-sectional view of the elutriator of FIG. **8**;

[0021] FIG. **10** is a simplified view of a cylindrical stage of the elutriator of FIG. **8**;

[0022] FIG. **11** is a simplified cross-sectional view of the cylindrical stage of FIG. **10**;

[0023] FIG. **12** is a graph illustrating the calculated terminal velocity of selected particles in an elutriator according to an embodiment of the present disclosure;

[0024] FIG. **13** is a side view of an embodiment of a system for processing a heterogeneous material;

[0025] FIG. **14** is a simplified schematic illustrating another embodiment of a system for processing a heterogeneous material;

[0026] FIGS. **15** through **17** are photomicrographs of ore samples from sandstone-hosted uranium deposits;

[0027] FIG. **18** is a graph illustrating a particle size distribution for a crushed sample of ore from sandstone-hosted uranium deposits;

[0028] FIG. **19** is a graph illustrating a particle size distribution and a percentage of uranium in each size fraction for a crushed sample of ore from sandstone-hosted uranium deposits;

[0029] FIG. **20** is a graph illustrating a particle size distribution and a percentage of uranium in each size fraction for a crushed sample of ore from sandstone-hosted uranium deposits and for a sample of the same material after ablation;

[0030] FIGS. **21** and **22** are graphs illustrating concentrations of elements as a function of ablation time in water used in an ablation process according to an embodiment of the present disclosure;

[0031] FIG. **23** is a photomicrograph of a crushed ore sample from sandstone-hosted uranium deposits, including a mineral patina; and

[0032] FIG. **24** is a photomicrograph of an ablated crushed ore sample from sandstone-hosted uranium deposits.

DETAILED DESCRIPTION

[0033] Devices, systems and methods for processing heterogeneous materials, such as heterogeneous solids, are described. In one embodiment, a method includes entraining heterogeneous particles into a fluid stream. The fluid stream is passed through at least one nozzle of a system, and is impacted to ablate the heterogeneous particles via kinetic collisions between particles within the fluid stream. As used herein, the term "ablate" means and includes wearing away by flexure, rebound, and distortion. Ablation may also include wear by friction, chipping, spalling, or another erosive process. When particles are ablated, the boundary between different materials may become more highly stressed than the bulk materials themselves. Thus, ablation may be particularly applicable to physical removal of coatings from an underlying material. Ablation imparts energy to the material being ablated to physically dissociate the material into various fractions (e.g., a solid fraction and an oil or two solid fractions). The ablated particles may then be classified to divide the heterogeneous material into various fractions. Ablation and separation may significantly reduce the amount of material to be further processed to recover the one or more desired components of the material. A system for the ablation process may include a conduit for a pressurized fluid and a nozzle assembly. The nozzle assembly may include two or more adjustable nozzles configured such that a stream passing through a nozzle intersects another stream passing through another nozzle in the nozzle assembly. The method and system may be scalable for operations of any size. The system may be portable, and its use may make separation commercially feasible in instances wherein conventional separation processes are impractical.

[0034] The devices, systems, and methods described herein may be particularly applicable to ores, such as sandstone, for the recovery of selected minerals, such as uranium-containing compounds. Uranium is often a post-depositional mate-

rial, carried into an already established sandstone formation by mineral-bearing solutions. Without being bound to any particular theory, it is believed that when these mineral-bearing solutions reached a reduction zone, carbon caused the uranium to reduce and precipitate out of solution to faun stable uranium-containing compounds. Because the sandstone formation was already in place, these uranium-containing compounds formed in two very specific locations within the ore—as a mineral patina surrounding grains and in carbonaceous material. Because the grain structure of sandstone is relatively impermeable, uranium patinas do not penetrate the grains. Instead, uranium patinas form a boundary between the grain and the cementing material in the sandstone formation.

[0035] As shown in FIG. **1**, the uranium mineral patina includes the heavy fines **18**, and is shown around quartz grains **14**. Carbonaceous materials are commonly found in sandstone-hosted uranium deposits, such as in the light fines **16** shown in FIG. **1**. In sandstone-hosted uranium deposits, carbonaceous materials generally range in size from less than about 1 mm to more than about 25 mm across. Other carbonaceous materials include partially decomposed trees, coal seams, etc., and vary widely in size. FIG. **2** shows a sample of a carbonaceous material. Carbonaceous materials generally have low specific gravities of between about 1.25 and 1.30, and may contain high concentrations of uranium or other post-depositional elements deposited by permeation of mineral-bearing solutions. However, carbonaceous materials may also have specific gravities higher or lower, depending on how the carbonaceous materials formed. For example, some carbonaceous materials may have specific gravities less than about 1.0. Carbonaceous materials subjected to compressive forces may have specific gravities greater than about 1.5. Dissociating and then recovering the light fines **16** from the oversize material **12**, the grains **14**, and the heavy fines **18** may therefore enable enhanced recovery of certain elements without processing the entire mass of sandstone by conventional techniques.

[0036] The properties of both the heavy fines **18** (including the mineralized uranium patina) and the light fines **16** (including the carbonaceous materials) makes them each amenable to dissociation and separation from the oversize material **12**, which does not contain uranium, and grains **14** of sandstone using an ablation process of the present disclosure. During ablation, the heavy fines **18** are separated from the oversize material **12** and grains **14**. Without the structure of the oversize material **12** and grains **14**, the patina has limited structure and fauns the heavy fines **18**, which are smaller than about 400-mesh. That is, the patina forms weak bonds between particles such that ablation breaks the patina particles down into particles smaller than about 400-mesh.

[0037] Some illustrations presented herein are not actual views of a particular system or process, but are merely idealized representations employed to describe embodiments of the present disclosure. Elements common between figures may retain the same numerical designation.

[0038] A system **100** for processing a heterogeneous material **103** is shown schematically in FIG. **3**. To simplify the figures and clarify the present disclosure, not every element or component of the system **100** is shown or described herein. The system **100** may also include appropriate piping, connectors, sensors, controllers, etc. (not shown), as will be understood by those of ordinary skill in the art. The system **100** may include a hopper **101** feeding a tank **102**, and a pump **104** in fluid communication with the tank **102**. The pump **104** may transport a mixed heterogeneous material **106** (which may include a mixture of the heterogeneous material **103** from the hopper **101** and an ablated heterogeneous material **124** that is recycled through a portion of the system **100**, as explained in more detail below) through a continuous-flow mixing device **108** and a splitter **110**. The mixed heterogeneous material **106** may then pass through a nozzle assembly **114**, and multiple streams of the mixed heterogeneous material **106** may impact one another, ablating solid particles therein to form the ablated heterogeneous material **124**. The ablated heterogeneous material **124** may, in some embodiments, be recycled through the system **100** by mixing the ablated heterogeneous material **124** with the unablated heterogeneous material **103** in the tank **102**. A stream **136** may be drawn off through a pump **138** to a separation system **140**, where it may be separated into two or more components. For example, in the system **100**, the separation system **140** may separate the stream **136** into grains **150**, light fines **152**, and heavy fines **154**. Though shown as a continuous-flow operation, the system **100** may also be configured to operate in batch mode, as will be understood by a person having ordinary skill in the art. Similarly, the system **100** may include multiple pumps, mixing apparatuses, and/or nozzle assemblies operated in series, such as with the stream **136** being directed through a second nozzle assembly before entering the separation system **140**. A system **100** having multiple nozzle assemblies operating in series may be configured such that each and every particle of the heterogeneous material **103** necessarily passes through each nozzle assembly at least once. In embodiments in which the system **100** includes multiple nozzle assemblies operating in series, subsequent nozzle assemblies may operate without additional hoppers **101** or separation systems **140**.

[0039] In some embodiments, the heterogeneous material **103** may be placed into the hopper **101**. The heterogeneous material **103** may include solid particles or a mixture of solid particles with a liquid. For example, the heterogeneous material **103** may include a portion of an ore containing a metal (e.g., uranium, gold, copper, and/or a rare-earth element) to be recovered. In some embodiments, the heterogeneous material **103** may be oil-contaminated sand. The liquid may include water (e.g., groundwater, process water, culinary or municipal water, distilled water, deionized water, etc.), an acid, a base, an organic solvent, a surfactant, a salt, or any combination thereof. The liquid may include dissolved materials, such as a carbonate or oxygen. In some embodiments, the liquid may be substantially pure water, or water removed from a water source (e.g., an underground aquifer) without purification and without added components. The composition of the liquid may be selected to balance economic, environmental, and processing concerns (e.g., mineral solubility or disposal). The liquid may be selected to comply with environmental regulations. In one embodiment, the liquid may be substantially free of a reagent (e.g., a leachate, an acid, an alkali, cyanide, lead nitrate, etc.) that is formulated to chemically react with the particles in the heterogeneous material **103**. In some embodiments, the liquid may be omitted. The hopper **101** may be configured to feed the heterogeneous material **103** into the tank **102**. For example, the hopper **101** may be placed at a higher elevation than the tank **102**, such that the heterogeneous material **103** flows by gravity into the tank **102**. The hopper **101** may include a device to move the heterogeneous material **103** to the tank **102**, such as an auger, tilt table, etc., which may communicate with or be controlled

by a computer **184**, such as a programmable logic controller (PLC). The computer **184** may detect operating conditions of the system **100** via one or more sensors (not shown) and adjust the flow of the heterogeneous material **103** accordingly.

[0040] The tank **102** may have an inlet (not shown) configured to receive the heterogeneous material **103** from the hopper **101**. The tank **102** may have one or more angled baffles **105** configured to direct the flow of the heterogeneous material **103**. In a continuous-flow system, the heterogeneous material **103** may mix with a mixed heterogeneous material **106** already in the tank **102**. The tank **102** may optionally have an input port (not shown) to add liquid to the mixed heterogeneous material **106**. The tank **102** may include a volume that narrows toward the ground, such as a conical portion. The narrowed volume may direct solids of the mixed heterogeneous material **106** into an outlet at the bottom of the tank **102**.

[0041] The pump **104** may be in fluid communication with the tank **102**, and may draw the mixed heterogeneous material **106** from the outlet of the tank **102**. The pump **104** may be a horizontal centrifugal pump, an axial centrifugal pump, a vertical centrifugal pump, or any other pump configured to pressurize and transport the mixed heterogeneous material **106**. The pump **104** may be selected such that solid particles of the mixed heterogeneous material **106** may pass through the pump **104** at an appropriate flow rate without damaging the pump **104**. For example, the pump **104** may be selected to pump 30 gallons per minute (gpm) (1.9 liters per second (l/s) of a mixed heterogeneous material **106** containing particles up to about 0.25 in. (6.35 mm) in diameter at a pressure of 32 pounds per square inch (psi) (221 kilopascals (kPa)). For example, the pump **104** may be a 5-horsepower WARMAN® Series 1000 pump, available from Weir Minerals, of Madison, Wis. The pump **104** may deliver any selected pressure and flow rate, and may be selected by a person having ordinary skill in the art based on the requirements for a particular application (e.g., a selected heterogeneous material **103** feedstock composition and flow rate). The pump **104** may communicate with or be controlled by the computer **184**. The computer **184** may detect operating conditions of the system **100** (e.g., by sensors (not shown)) and adjust the operation of the pump **104**. In some embodiments, the system **100** may include multiple pumps **104** (not shown in FIG. **3**).

[0042] The pump **104** may pressurize and transport the mixed heterogeneous material **106** through a continuous-flow mixing device **108**, such as a pipe having mixing vanes inside. The continuous-flow mixing device **108** may promote a uniform distribution of the solid particles within the mixed heterogeneous material **106**. For example, mixing vanes may cause larger or more dense particles (which may tend to be distributed differently in the mixed heterogeneous material **106** than fines) to be remixed throughout the mixed heterogeneous material **106**. The mixed heterogeneous material **106** may pass through a splitter **110**, separating the mixed heterogeneous material **106** into a plurality of streams **112** approximately equal in volumetric flow and composition. For example, the splitter **110** may produce two, three, four, or more streams **112**. In some embodiments, a rotor of the pump **104** may be aligned with respect to the splitter **110** such that each stream **112** includes identical or nearly identical amounts of solid particles of each size and/or density. For example, a plane of symmetry of the splitter **110** may be perpendicular to an axis of rotation of the rotor of the pump **104**. In such embodiments, the continuous-flow mixing device **108** may be omitted, saving energy that would otherwise be used for mixing in the continuous-flow mixing device **108**. In embodiments having multiple pumps **104** (not shown in FIG. **3**), the mixed heterogeneous material **106** may be separated into components without a continuous-flow mixing device **108**.

[0043] The streams **112** produced by the splitter **110** or from the multiple pumps **104** (not shown in FIG. **3**) may enter a nozzle assembly **114**, shown in simplified cross-sectional view in FIG. **4**, through a plurality of inlets **122**. The nozzle assembly **114** may include a body **115** and a plurality of nozzles **116** arranged and configured such that the streams **112** (not depicted in FIG. **4**) intersect in an impact zone **118**, indicated by a dashed circle in FIG. **4**, after passing through the nozzles **116**. The streams **112** may intersect in an open portion of the nozzle assembly **114**. The nozzles **116** may form the streams **112** into coherent, focused streams. The nozzle assembly **114** may have a plurality of flow constriction zones **120** between inlets **122** and the nozzles **116** in which the flow velocity of the streams **112** increases. The flow constriction zones **120** may have sizes and shapes such that the streams **112** flow through the nozzles **116** without cavitation. The flow constriction zones **120** may have a size and shape configured to increase the flow velocity of the streams **112** isentropically (i.e., with little or no increase in entropy), such as by a reversible adiabatic compression. The flow constriction zones **120** may reduce the area through which the streams **112** pass. Each nozzle **116** may have a plurality of straight sections **121** having one or more walls approximately parallel to an axis of symmetry **117** between the flow constriction zones **120** and the nozzle exits **119**. The straight sections **121** may serve to collimate or align the flow of particles and fluid of the streams **112** so that the particles travel in directions approximately parallel. Longer straight sections **121** may be more effective at aligning the flow than shorter straight sections **121**. In some embodiments, the cross-sectional area of the straight sections **121** may be approximately the same as the cross-sectional area of the nozzle exits **119**, and may be from about 5% to about 20% of the cross-sectional area of the inlets **122**. In other embodiments, the cross-sectional area of the nozzle exits **119** may be approximately equal to the cross-sectional area of the inlets **122**, which may, in turn, be approximately equal to the cross section of an outlet of the pump(s) **104**. The diameter of the nozzle exits **119** may be selected to be approximately twice the diameter of the largest particles expected to pass through the nozzles **116**. The velocity of the streams **112** may vary in proportion to an inverse of the cross-sectional area, and the velocity of the streams **112** at the nozzle exits **119** may therefore be from about 5 times to about 20 times the velocity of streams **112** at the inlets **122**. The velocity of the streams **112** may be tailored for a specific application. For example, the velocity of the streams **112** may be from about 10 feet per second (ft/s) (3.0 meters per second (m/s)) to about 1000 ft/s (305 m/s). The velocity of the streams **112** may depend on the properties of the heterogeneous material **103** (FIG. **3**). For example, in some applications, the velocity of the streams **112** may be from about 300 ft/s (91 m/s) to about 500 ft/s (152 m/s), whereas in other applications, the velocity of the streams **112** may be from about 40 ft/s (12.2 m/s) to about 60 ft/s (18.3 m/s). The velocity of the streams **112** may be selected such that solids are carried along with liquids in the heterogeneous material **106** and that enough energy is transferred to particles to dissociate constituents of the particles

without breaking homogeneous portions of particles (e.g., to remove a coating without breaking a core over which a coating is disposed). In some embodiments, the velocity of the streams may be selected (i.e., relatively higher) such that enough energy is transferred to particles to pulverize homogeneous portions of material into finer particles. Thus, the ablated heterogeneous material **124** (FIG. **3**) may optionally include particles having a relatively uniform particle size. Each of the nozzles **116** may have its own axis of symmetry **117** in the center thereof. The axis of symmetry **117** of one nozzle **116** may intersect or coincide with the axis of symmetry **117** of another nozzle **116** in the impact zone **118**. In embodiments in which the nozzle assembly **114** contains two nozzles **116**, the nozzles **116** may share a single axis of symmetry **117**. Furthermore, the nozzles **116** may be oriented to face one another. That is, two streams **112** may impact one another traveling in opposite directions (i.e., head-on) through counter-opposing nozzles **116**. In such an arrangement, the kinetic energy of the streams **112** converted to impact energy may be larger than in nozzle arrangements in which the streams impact obliquely or perpendicularly.

[0044] FIG. **5** illustrates another embodiment of a nozzle assembly **114'**. A system **100** having nozzle the assembly **114'** may not include a splitter **110**, but may instead be configured such that the entire mixed heterogeneous material **106** is directed through a single nozzle **116**. The nozzle **116** may be configured to direct the stream **112** (not depicted in FIG. **5**) against a solid object, such as surface **123** of the impact zone **118**. The portion of the surface **123** against which the stream **112** collides may be the impact zone **118** of the nozzle assembly **114'**. In the nozzle assembly **114'** of FIG. **5**, the body **115** and nozzle **116** may be a single unitary structure.

[0045] FIG. **6** illustrates another embodiment of a nozzle assembly **114"**. Each stream **112** (not depicted in FIG. **6**) may pass through multiple constriction zones **120** separated by straight sections **121** before exiting a corresponding nozzle **116**. Two constriction zones **120** are shown for each nozzle **116** in the nozzle assembly **114"** shown in FIG. **6**, but a nozzle assembly **114"** may include any number of constriction zones **120**. Multiple constriction zones **120** and multiple straight sections **121** may contribute to increased collimation and decreased wear of the nozzle assembly **114"**. Thus, additional constriction zones **120** may increase the efficiency of the system **100**.

[0046] The impact zone **118** may be centrally positioned proximate to the nozzles **116** (e.g., between or among multiple nozzles **116**, or on a surface across a gap from a single nozzle **116**). In embodiments having two nozzles **116**, the impact zone **118** may be located midway between the two nozzles **116** (i.e., if the streams **112** have equivalent mass flow and particle distribution), but may be located anywhere between the two nozzles **116** or in any location in which the streams **112** can intersect. The size of the impact zone **118** may be determined by various design parameters, such as the velocity of the mixed heterogeneous material **106**, the size and/or shape of the nozzles **116**, the roughness of the material of the nozzle assembly **114**, the alignment of the nozzles **116**, the number of nozzles **116**, the distance between the nozzles **116** (if applicable), the length and/or number of the straight sections **121**, the composition of the streams **112**, etc. The impact zone **118** may encompass the vena contracta of each stream **112** (i.e., the point at which the diameter of each stream **112** is at a minimum, and the velocity of each stream **112** is at a maximum). The volume or area of the impact zone **118** may correspond to the concentration of energy of the streams **112**. That is, in the collision of tightly focused streams **112**, particles may be more likely to impact or collide directly with other particles traveling in an opposite direction than they are in streams **112** intersecting in a larger volume. The particles have a greater probability of colliding directly if the streams **112** themselves impact directly. Likewise, in the collision of a tightly focused stream with a surface **123**, particles may be more likely to collide with the surface **123** perpendicularly than they are in a stream **112** tangentially intersecting a larger area of the surface. To control the volume or area of the impact zone **118**, it may be desirable to limit or prevent flaring of the streams **112** as the streams **112** leave the nozzles **116**. Flaring may be reduced or eliminated by, for example, lengthening the straight section **121**, precision machining, reducing surface roughness, including a shielding fluid (e.g., air, water, oil, etc.) around the stream **112**, etc.

[0047] The kinetic energy of the streams **112** may be used to separate materials of the particles in the streams **112**, such as coatings or layers of material overlying a core (e.g., a film, patina, varnish, oxide, or crust). For example, if the mixed heterogeneous material **106** (and therefore, each of the streams **112**) contains uranium ore, including particles of the sandstone **10** shown in FIG. **1**, the kinetic energy of the streams **112** may remove the light fines **16** and/or the heavy fines **18** from the grains **14**. If the mixed heterogeneous material **106** contains micro-fine gold particles having silicate patinas, the kinetic energy may remove the silicate from the gold. If the mixed heterogeneous material **106** contains oil-contaminated sand, the kinetic energy may remove the oil coating from the grains of sand. Separation of materials may be a physical process (e.g., physical dissociation), independent of any chemical process (e.g., chemical reaction, dissolution) of any materials. Thus, by utilizing embodiments of the present disclosure, materials may be separated without the addition of reagents (e.g., leachates, acids, alkalis, cyanide, lead nitrate, etc.), and the system **100** may be used to recover materials that are conventionally recovered by environmentally or operationally problematic techniques. However, the reagents may be present in the liquid, such as in the groundwater, in trace amounts. Thus, embodiments of the present disclosure may be used to separate materials from one another even when none of the materials has sufficient solubility in the liquid for chemical separation.

[0048] The nozzle assembly **114** may be customized or tuned for various applications. For example, the distance from the nozzles **116** to the impact zone **118** may be varied, such as by moving the nozzles **116** inward or outward in the nozzle assembly **114**. The nozzles **116** may be adjustable, including threaded fittings or other means to adjust the position of the nozzles **116** with respect to the impact zone **118** (e.g., to move the vena contracta within the impact zone **118**). Other properties of the system **100** that may be adjusted include, for example, nozzle diameter, the number of nozzles, the length and/or number of constriction zones **120** and straight sections **121**, the addition of a liquid to the mixed heterogeneous material **106**, the maximum particles size of the heterogeneous material **103** entering the system **100**, etc. Performance may also be adjusted by changing the pressure and/or velocity of the streams **112** exiting the nozzles **116**. These properties may be made by, for example, adjusting the power output of the pump **104**. Such tuning may be desirable to use the system **100** to process different materials. In some embodiments, tuning may be performed in the field, such that

as changes are encountered in a feed stream of heterogeneous material **103**, adjustments may be made to maintain or improve processing efficiency.

[0049] In some embodiments, it may be desirable to impact particles with a lower energy, such as when a bond between two materials to be dissociated is relatively low. The impact energy may be lowered by adjusting one or more properties as described above. The impact energy may also be lowered by colliding the streams **112** in a configuration other than directly opposing. Two streams **112** may be aligned such that they intersect at an angle less than 180°, such as in the shape of the letter "V." Such an arrangement may also direct the flow of the material after impact.

[0050] After intersection of the streams **112** of the mixed heterogeneous material **106** in the impact zone **118**, the streams **112** may recombine into a single stream of ablated heterogeneous material **124**, and may flow through an outlet **126** of the nozzle assembly **114**. The ablated heterogeneous material **124** may contain more particles and/or finer particles than the mixed heterogeneous material **106** entering the nozzle assembly **114**. The outlet **126** may have a cross-sectional area larger than the combined cross-sectional areas of the nozzles **116**, such that the flow of the ablated heterogeneous material **124** does not fill the entire outlet **126**. Air may, therefore, flow freely into or out of the outlet **126** adjacent the impact zone **118**. In some embodiments, the tank **102** (FIG. **3**) may be sealed from ambient air, and may be filled with a gas. For example, the tank **102** may contain an inert gas. In such embodiments, the inert gas may flow freely into or out of the outlet **126**. The outlet **126** may be disposed below the impact zone **118**, such that the stream of ablated heterogeneous material **124** exits the nozzle assembly **114** by the force of gravity. For example, if the nozzle assembly **114** has two nozzles **116**, the nozzle assembly **114** may be shaped like the letter "T," with the two nozzles **116** pointed at each other, and wherein the outlet **126** is below the impact zone **118** between the nozzles **116**. In embodiments in which the streams **112** include a slurry, the nozzle assembly **114** may have air disposed therein, such that the streams **112** flow through air after leaving the nozzles **116** and before reaching the impact zone **118**.

[0051] Referring again to FIG. **3**, the stream of ablated heterogeneous material **124** may pass through the outlet **126** of the nozzle assembly **114** back to the tank **102**, and may mix with the mixed heterogeneous material **106** in the tank **102**. A discharge pump **138** may extract a stream **136** of the mixed heterogeneous material **106** from the tank **102** and may transfer the stream **136** to a separation system **140**. For example, the stream **136** may be drawn from an outlet located above one or more baffles **105**, and the heterogeneous material **103** may enter the tank **102** below one or more of the baffles **105**. The baffles **105** may direct the flow of the ablated heterogeneous material **124** past the outlet for the stream **136** before mixing the heterogeneous material **103** from the hopper **101**, such that material of the stream **136** is drawn from the ablated heterogeneous material **124** that has been passed through the nozzle assembly **114** at least once. In some embodiments, and as discussed above, the system **100** may include multiple nozzle assemblies **114** operated in series, such that material of the stream **136** passing to the separation system **140** has passed through each nozzle assembly **114** at least once. In such embodiments, the system **100** may include one or more transfer pumps to transfer material from one nozzle assembly **114** to another. The flow rate of the stream **136** may be varied relative to other flow rates (e.g., the flow rate of the heterogeneous material **103** into the tank **102** or the flow rate of the mixed heterogeneous material **106** through the pump **104**) to adjust the average number of times that particles pass through the system **100**. Different heterogeneous materials **103** may have different bonding properties, and therefore may require different amounts of energy to effect dissociation. For example, relatively weaker bonds may be broken by relatively less-direct collisions in the impact zone **118** (see FIGS. **4** through **6**), whereas relatively stronger bonds may require more-direct collisions. To increase the fraction of particles undergoing direct collision, the particles may be recycled through the system **100** (i.e., the flow of the mixed heterogeneous material **106** through the pump **104** may be increased with respect to the flow of the stream **136** to the separation system **140**) and/or passed through more than one ablation system **100** in series.

[0052] In some embodiments, a separation system **140** may be designed to separate portions of the stream **136** by size, shape, density, magnetic character, electrostatic charge, or any other property of particles of the stream **136**. For example, in one embodiment and as shown in FIG. **7**, the separation system **140** may include a screen **142** (e.g., a rotary screen, an angled screen, etc.) to remove particles larger than a selected size. For example, the screen **142** may allow fines **148** (i.e., particles smaller than the mesh size of the screen **142** (e.g., 140 wires per in. (55 wires per cm))) to pass through the screen **142**. Grains **150** (i.e., particles larger than the mesh size of the screen **142**) may be diverted elsewhere. The fines **148**, the grains **150**, or both, may be selected for further processing. For example, in a stream **136** containing gold particles, the grains **150** may contain the gold, whereas the fines **148** may be substantially free of gold. In such embodiments, the fines **148** may be discarded or returned to the mine as barren waste (i.e., waste substantially free of a material of interest). In a stream **136** containing uranium ore, the fines **148** may contain uranium, whereas the grains **150** may contain barren ore. In such embodiments, the grains **150** may be returned to a uranium mine as barren waste, and the fines **148** may be further separated, such as in a gravimetric separator **144**.

[0053] A portion of the stream **136** (e.g., the fines **148**) may pass into a gravimetric separator **144** for further separation. The particles of the stream **136** in the gravimetric separator **144** may have approximately uniform particle sizes, making them inseparable by screening, but separable on the basis of density. For example, the gravimetric separator **144** may be an elutriation system including a vertical column **146**. As used herein, the term "elutriation" means and includes a process of separating materials based on differences in density. The portion of the stream **136** to be separated (e.g., the fines **148**) may enter the top of the vertical column **146**. A fluid **156** (e.g., water) may be continually introduced into the bottom of the vertical column **146** and may flow upward through the vertical column **146**. The flow of fluid **156** through the vertical column **146** may be in either a laminar or a turbulent regime. It may be desirable to pass fluid **156** through the vertical column **146** in the turbulent flow regime because surface roughness and flow perturbations may be inconsequential for turbulent flow, and control may therefore be simpler. By regulating the rate at which fluid **156** is introduced into the vertical column **146**, it may be possible to control the vertical flow rate within the vertical column **146** so that light fines **152** (particles having densities below a

selected value) exit the top of the vertical column **146** with the fluid **156**, whereas heavy fines **154** (particles having densities above the selected value) sink to the bottom of the vertical column **146**. The heavy fines **154** may be continuously extracted from the bottom of the vertical column **146**, and the volume of the fines removed may be replaced with makeup water added at the bottom of the vertical column **146**. Alternatively, the gravimetric separator **144** may be operated in batch mode, and the heavy fines **154** may be removed between operations.

[0054] The light fines **152** may be directed to another apparatus (e.g., a hydrocyclone, an evaporator, etc.) for separation of the fluid **156** therefrom. In some embodiments, the gravimetric separator **144** may include two or more vertical columns **146** in series, to enhance separation, or in parallel, to increase volumetric flow. Separation of the heavy fines **154** from the light fines **152** may decrease the amount of material to be processed to recover a target material of interest, and may decrease the amount of the target material of interest left in non-bearing fractions. Fluids **156** used in the operation of the system may be cleaned by reverse osmosis, filtration, ion exchange, or any other method known in the art.

[0055] In some embodiments, the gravimetric separator **144** depicted in FIG. **7** may be an elutriator **200**, as shown in FIGS. **8** through **11**. A cross section of the elutriator **200** is shown in FIG. **9**. The elutriator **200** includes a column **202** having a plurality of fluid inputs **204** and a slurry input **206**. The column **202** may include a generally cylindrical upper portion **208** and a plurality of cylindrical stages **210** (e.g., **210***a*, **210***b*, **210***c*, **210***d*, etc.), forming a lower portion **211** having a generally conical interior. The elutriator **200** may be configured such that the higher-density particles settle to the bottom of the column **202**, and the lower-density particles rise to the top of the column **202**. For example, water may enter the column **202** via the fluid inputs **204** in the plurality of cylindrical stages **210**. The water may be directed upward in the column **202** as the water leaves each cylindrical stage **210**, such that water entering the column **202** from each fluid input **204** flows parallel to water entering from adjacent fluid inputs **204**. The water may flow upward through the column **202** in a turbulent flow regime (e.g., with a Reynolds number of at least about 2,300, at least about 10,000, at least about 50,000, or even at least about 100,000).

[0056] The column **202** may have a geometry selected to minimize or eliminate the boundary layer between the water and walls of the column **202**. For example, the cylindrical stages **210** may each include a fluid input **204** configured to deliver a portion of water. The fluid input **204** in the first stage **210***a* may provide water flowing into a void defined by an inside wall **212***b* of the second stage **210***b* at a selected velocity. The water flowing into the column **202** through the first stage **210***a* fills the entire void defined by an inside wall **212***b* of the second stage **210***b*. The fluid input **204** in the second stage **210***b* may provide water such that the water flows through a void defined by an inside wall **212***c* of the third stage **210***c* at the same selected velocity. The water flowing into the column **202** through the second stage **210***b* fills void defined by an inside wall **212***c* of the third stage **210***c*, which may be significantly smaller than the void defined by the inside wall **212***b* of the second stage **210***b*. Thus, the flow through the second stage **210***b* may be significantly smaller than the flow through the first stage **210***a*. Thus, each fluid input **204** may provide water sufficient to maintain a constant flow velocity from the bottom of the column **202** to the top of the column **202**.

[0057] A top view of a single cylindrical stage **210** is shown in FIG. **10**, and a section view through line A-A is shown in FIG. **11**. The stage **210** shown is a cylindrical body and includes six fluid inputs **204** spaced around the stage **210**, but the stage **210** may be any shape and include any number of fluid inputs **204**. Fluid enters the stage **210** through the fluid inputs **204**, and passes through a channel **214**. The channel **214** may be a cylindrical void, open along an upper side of the stage **210**. When the stage **210** is stacked in the column **202** (FIGS. **8** and **9**), another stage **210** may provide a boundary of the channel **214** to direct the flow toward the inside wall **212**. The fluid then flows through the channel **214** toward the center of the stage **210**, where a lip **216** deflects the fluid upward. The fluid then leaves the stage **210** and flows upward in the column **202**.

[0058] The stages **210** may direct the fluid upward within an annular area (e.g., the area between the lip **216** of the stage **210** and the inside wall **212** of the stage **210** above), and may continuously interrupt the boundary layers at the inside wall **212**. Because the fluid from each stage **210** (starting with second stage **210***b*) is directed upward around flowing fluid from lower stages **210**, the volume near the lip **216** in which the fluid has a low-velocity fluid is relatively small. That is, the upward-flowing fluid in the center of the column **202** tends to carry fluid that would otherwise flow slowly (due to the no-slip boundary condition of fluid mechanics) at the lip **216**. As the combined fluid flows upward, the fluid entering through the stage **210** may tend to mix with the fluid from lower stages **210**. The velocity profile of the combined fluid may tend to flatten, forming a more uniform flow as the fluid rises. In embodiments in which the flow velocity increases slightly from the bottom of the column **202** to the top of the column **202**, the velocity may be slightly higher near the walls of the column **202** than at the center. Such a velocity profile may tend to cause heavier particles (e.g., particles having a terminal velocity higher than the average velocity of the fluid) to fall downward and toward the center of the column **202**, while lighter particles rise to the top of the column **202**.

[0059] Particles of material to be separated may enter the elutriator **200** near the top of the column **202** via the slurry input **206**. Though illustrated as a single flow into the center of the column **202**, the slurry input **206** may include one or more nozzles, a distribution manifold, a spray, or any other means to disperse particles within the column **202**. Particles of material in the slurry may be separated based on gravitational forces and forces of the water. Thus, particle mass, particle surface area, and fluid flow conditions may each affect the speed and direction of travel of a particular particle. In particular, a particle on which the gravitational force exceeds the force of the water will fall in the column **202**, and a particle on which the force of the water exceeds the gravitational force will rise in the column **202**.

[0060] The movement of particles in the column **202** may be characterized as a flow of particles in an upward-flowing stream of water. In such a characterization, calculation of the terminal velocities of particles is instructive, and may aid in the design or selection of the elutriator **200**. FIG. **12** shows calculated terminal velocities for particles of various geometry and density. FIG. **12** includes terminal velocities based on four particle shapes (sphere, cube, tetrahedron, and disk) and three densities (ρ=2.5 g/cm^3, ρ=6.5 g/cm^3, and ρ=10.95

g/cm^3). As shown in FIG. **12**, the terminal velocities of smaller particles are influenced less by the particles' shapes than the terminal velocities of larger particles. Thus, terminal velocities of smaller particles of a selected density are more closely clustered than terminal velocities of larger particles of the same density. This makes classification of smaller particles by their densities relatively more effective than classification of larger particles. For example, in a sample of particles having an effective diameter of approximately 0.002 in. (0.051 mm), an upward water flow at a velocity of between about 0.009 and 0.02 ft/s (between about 0.0027 and 0.0060 m/s) would effectively separate particles (whether spherical, cubic, tetrahedral, or disk-shaped) having a density of 2.5 g/cm^3 from particles having a density of 6.5 g/cm^3. As used herein, the term "effective diameter" of a particle means the diameter of a hypothetical spherical particle having the same mass as the particle. In a sample of particles having an effective diameter of approximately 0.010 in. (0.25 mm), a water flow rate of between about 0.13 and 0.16 ft/s (between about 0.040 and 0.049 m/s) would effectively separate particles (whether spherical, cubic, tetrahedral, or disk-shaped) having a density of 2.5 g/cm^3 from particles having a density of 6.5 g/cm^3. For particles having an effective diameter larger than about 0.015 in. (0.38 mm), separation of particles having a density of 2.5 g/cm^3 from particles having a density of 6.5 g/cm^3 may not be possible if one or both materials include particles of differing geometry. That is, the terminal velocity curve for disk-shaped particles having a density of 6.5 g/cm^3 crosses the terminal velocity curve for spherical particles having a density of 2.5 g/cm^3 at a particle diameter of about 0.015 in. (0.38 mm).

[0061] Particles (e.g., lower-density particles) that flow upward in the column **202** may eventually reach an upper outlet **218** (FIGS. **8** and **9**), where particles may be collected and removed from the elutriator **200** with the fluid. Particles (e.g., higher-density particles) that flow downward in the column **202** may eventually reach a lower outlet **220** (FIG. **9**), where particles may be collected and removed.

[0062] The elutriator **200** may include multiple columns **202** selected and configured to separate different materials. For example, the particles collected from the upper outlet **218** or the lower outlet **220** of the column **202** may be transferred to another column **202** having different dimensions or flow rates for subsequent separation. In some embodiments, the column **202** of the elutriator **200** may include additional outlets for withdrawing materials.

[0063] The flow of materials into and out of the elutriator **200** may be measured and/or controlled by flow meters, valves, a computer control system, etc. (e.g., the computer **184** shown in FIG. **3**).

[0064] Referring again to FIG. **7**, in embodiments in which the mixed heterogeneous material **106** (FIG. **3**) contains uranium ore, the gravimetric separator **144** may be used to separate light fines **152** from heavy fines **154**. The light fines **152** may include barren material and carbonaceous materials, and the heavy fines **154** may include uranium-bearing minerals, such as uraninite. Processing of uranium ore in the system **100** (FIG. **3**) including in the separation system **140** may produce a concentration of less than about 1.0 parts per million (ppm) of uranium in waste fractions (e.g., light fines **152**, grains **150**, and oversize materials). The system **100** may be used to process uranium left behind in ore previously processed by ISR techniques.

[0065] Though described herein as having a screen **142** followed by a gravimetric separator **144**, other separation equipment and techniques may be used to separate portions of the mixed heterogeneous material **106**. For example, in some embodiments, the screen **142** or the gravimetric separator **144** may be used alone. In other embodiments, the gravimetric separator **144** may precede the screen **142** in the process. Furthermore, the gravimetric separator **144** may include any other equipment for classifying materials based on specific gravity, such as a centrifuge, a shaking table, a spiral separator, etc., instead of or in addition to the vertical column **146**.

[0066] As shown in FIG. **13**, the system **100** for processing a heterogeneous material may be disposed within a single container. For example, the system **100** may be contained substantially within a frame **180** on a skid or pallet **182** configured to be carried by a forklift and/or a commercial truck, such that the system **100** may be transported and operated without disassembly. In other words, the components of the system **100** may be entirely disposed within the frame **180**, with the exception of portions of piping, wiring, covers, etc. The frame **180** may surround and protect the system **100** during transport, but may be open such that the system **100** may be operated without removing the system **100** from the frame **180**. Thus, onsite setup requirements and the costs associated with moving the system **100** may be minimized. The system **100** may include equipment as discussed above and shown schematically in FIGS. **3** and **7**, such as a tank **102**, a pump **104**, a nozzle assembly **114**, a gravimetric separator **144**, etc. Furthermore, the system **100** may include a computer **184** configured to monitor and/or control operation of the system **100**. In some embodiments, the frame **180** may have a length of from about 2 feet (0.61 m) to about 10 feet (3.0 m), a width of from about 2 feet (0.61 m) to about 8 feet (2.4 m), and a height of about 2 feet (0.61 m) to about 8 feet (2.4 m). The system **100** may have a weight of, for example, from about 100 lbs (45.4 kg) to about 4,000 lbs (1814 kg). In some embodiments, the system **100** may be installed in a temporary or permanent facility. In other embodiments, the system **100** may include unitized components configured to be transported by multiple commercial vehicles. For example, the system **100** may be transported on five 30-foot trailers.

[0067] The system **100** may also include one or more analytical instruments (not shown). For example, the system **100** may include instruments configured to test X-ray fluorescence, gamma radiation (e.g., to determine the concentrations of various isotopes of a material), turbidity, pH, bicarbonate ion concentration, particle size distribution (e.g., by laser particle analysis) etc. The analytical instruments may be controlled by the computer **184**. The computer **184** may use data from the analytical instruments to calculate a mass balance in real time. The computed mass balance may be used in the control mechanism of the system **100**, quality control, maintenance, accounting, etc. For example, the computer **184** may track the amount of material processed in the system **100** or the amount of a selected material produced. Thus, an operator of the system **100** may make informed decisions regarding maintenance intervals, payment of usage fees, etc.

[0068] In some embodiments, the system **100** may be configured to optionally be used in conjunction with other systems **100**. For example, a material (e.g., ore from a mining operation) may be processed in a first ablation system. After ablation in the first ablation system, ablated material may optionally be processed in a second ablation system. In some

embodiments, the ablated material leaving the first ablation system may be tested to determine whether subsequent processing is necessary or desirable. The material may be processed through as many ablation systems as necessary to achieve desired material properties. The flow of material through ablation systems may be varied during operations. For example, during a mining operation, material properties may vary widely within a formation. Some materials may be profitably processed through a single ablation system, whereas other materials may be profitably processed through two or more ablation systems in series. The flow of materials through various ablation systems may be varied during mining operations in response to changes in materials to be processed.

[0069] In some embodiments, and as shown in FIG. **14**, system **200** may include a pressurized fluid source **107**. The pressurized fluid source **107** may be compressed air from a pump **104**, or may be water, oil, or any other fluid. The pressurized fluid source **107** may pass through a conduit to a nozzle assembly (e.g., any of nozzle assemblies **114**, **114'**, **114"**, as described previously herein and shown in FIGS. **4** through **6**), optionally passing through a splitter **110**. The fluid of the pressurized fluid source **107** may entrain a heterogeneous material **103**, such as from a hopper **101**. An ablated heterogeneous material **124** may pass optionally into a tank **102** (e.g., a collection bin, a hopper, etc.) and then to a separation system **140**. A transport apparatus (e.g., a conveyor belt, a chute, etc.) may carry the ablated heterogeneous material **124** to the separation system **140**. The system **200** may include a computer **184** for control, data collection, etc.

[0070] Heterogeneous materials may be processed with the system **100**, **200** described herein. In some embodiments, heterogeneous material is crushed and/or screened to remove particles larger than a selected size, such as particles that are too large to be effectively processed in the system **100**, **200**. For example, in some embodiments, particles larger than about 0.25 in. (larger than about 6.35 mm) may be removed. In many sandstone-hosted uranium ores, from about 5% to about 30% or more of the material forms particles larger than about 0.25 in. (larger than about 6.35 mm) upon crushing. In such materials, particles of ore larger than about 0.25 in. that have been mechanically crushed may contain no uranium compounds. Therefore, these particles need not be processed by the ablating process described herein if the goal is uranium recovery. These particles may instead be discarded as barren waste, used to reclaim mines, etc.

[0071] In other embodiments, no screening is necessary. For example, some heterogeneous solid feedstocks may already be entirely within size requirements of the system. For example, in the processing of oil-contaminated sand or silicate-coated gold, grains of material may all be within a range of sizes that may pass through the system.

[0072] Methods may include mixing the heterogeneous material with a liquid to form a slurry. For example, the slurry may be formed in a tank **102**, as shown in FIG. **3**. In some embodiments, the heterogeneous material may be mixed with the liquid before adding the heterogeneous material to the system. For example, in embodiments in which the heterogeneous material is ore from an underground formation, the ore may be extracted by borehole mining. In borehole mining, the ore is extracted from the formation by high-pressure water jets, and is carried to the earth's surface by the water. The mixing of the heterogeneous solid ore with the liquid water therefore occurs in the underground formation. The slurry may have any ratio of solids-to-liquids as long as the flow can transport the solids to an impact zone. In some embodiments, the slurry may include from about 5% to about 50% solids by mass, such as between about 10% and about 20% solids by mass.

[0073] Methods may further include pumping streams of the slurry through a nozzle assembly (e.g., any of nozzle assemblies **114**, **114'**, **114"**, as described previously herein and shown in FIGS. **4** through **6**) and impacting the streams (and therefore the particles therein) to ablate particles of the slurry against one another. The streams may, in the process, recombine into a single slurry stream. The heterogeneous material may separate into discrete fractions in the ablation process. For example, coatings may be removed from particles of the heterogeneous material in the ablation process. In some embodiments, all or a portion of the slurry may be recycled through the system (e.g., returned to the tank **102**).

[0074] The slurry that has been processed through the nozzle assembly may be processed to separate particles by size. For example, the slurry may be passed through a screen to separate particles larger than a mesh size of the screen from particles smaller than the mesh size of the screen. For example, the particles of the slurry may be separated into grains larger than 0.004 in. (0.10 mm) and fines smaller than 0.004 in. (0.10 mm) by appropriately selecting the mesh size of the screen. In some embodiments, multiple separations may be performed, such as by passing portions of the slurry through multiple screens in series. Different size classifications may be selected by selecting one or more appropriate screens.

[0075] Particles having approximately the same size (such that separation by size classification may be difficult or expensive) may have different compositions, and separation of particles with different compositions may be desirable. For example, uranium-rich fines may have similar sizes as non-bearing or uranium-depleted fines formed from ablation of material from a single formation. Light and heavy fines may require different techniques to recover uranium. Therefore, to reduce the amount of material that must be processed by other means (e.g., chemically) to extract the uranium, the fines may be separated gravimetrically. For example, the fines may be disposed in a vertical column of water, and a fluid may flow upward through the column, such as at turbulent flow rates. The fluid may be water, mineral oil, an organic solvent, air, etc. Water may be selected based on its flow properties, availability, and minimal environmental impact, but other fluids may be used instead. The fines may be separated in the column by their densities, with heavier fines dropping to the bottom, and lighter fines rising to the top. Gravimetric separation may be performed in one or more stages, with different stages having different densities at which the separation occurs. Various parameters may affect the separation, such as the type of fluid used, the temperature, the flow rates, the size of the column, etc.

[0076] Fluids used in the process, such as in the slurry or in the gravimetric separation, may be removed from the solids in a dewatering operation. Fluids may be processed by filtration, ion exchange, reverse osmosis, etc., to remove residual impurities, enabling recycling of the fluids.

[0077] The ablation process described herein may be coupled with borehole mining, the borehole mine providing the heterogeneous material **103** to be processed. In some embodiments, the heterogeneous material **103** is an ore, such as a uranium-bearing ore. The use of borehole mining in

conjunction with an ablation system as described herein may provide operational, environmental, and other advantages. For example, borehole mining may be used to extract minerals from unbounded deposits, deposits located above the water table, shallow deposits with insufficient hydrologic permeability, deposits in impermeable rock formations, or small deposits of minerals that may not be economically, technically, or lawfully recoverable by conventional ISR. Borehole mining may be performed in independent wells that do not have to be connected to other wells in the field. A single well may be used to penetrate a formation, scour the ore from the formation, carry the scoured ore to the surface by a slurry, and return barren fractions of processed ore to the formation. This may allow extraction of minerals with a reduced surface footprint in comparison to conventional methods.

[0078] Borehole mining is a technique for extracting mineral deposits from an underground formation. Typically, a borehole is drilled to a desired depth. A casing may be inserted into a portion of the borehole. A borehole mining tool is inserted into the borehole, and water is pumped into the tool to produce high-pressure water jets. The jets scour ore from the formation, and the mined ore is carried to the surface in a slurry of the water. Though borehole mining has been demonstrated as a method of mining underground deposits, the method generally requires a nearby mill, and may require further separation of ore after transport to the surface.

[0079] Borehole mining, a water-only approach, may enable the removal of minerals that may conventionally (e.g., via ISR) be removed by injecting a leachate or lixiviant into a formation, but without problems associated with the use of leachates or lixiviants. In borehole mining, water jets may physically remove formation material without chemically mobilizing or dissolving metals, limiting the risk of aquifer contamination. Water jets may operate without modifying foiniation chemistry and without additional reagent costs. Borehole mining may also be simpler than conventional ISR. Because material of the formation is extracted, rather than processed in-situ, borehole mining may begin with less information known about the formation. Though the boundaries of the formation and geological characteristic may still need to be probed, geochemical classification and permeability of the formation are not necessary to perform a borehole mining operation because borehole mining does not rely on chemical reaction or on permeation.

[0080] In some embodiments, borehole mining may be used to scour ore from a wedge-shaped volume of an underground formation. The extent of the volume may be tailored by controlling the direction, location, and intensity of the water jets. Borehole mining may therefore be used to asymmetrically excavate the formation, roughly following foiination boundaries. The ore from the wedge-shaped volume may be extracted and processed. The wedge may then be refilled, such as with barren waste or fill and, optionally, a cementing material. Additional volumes of material may be extracted in a similar manner. Additional volumes may be excavated from a well in which volumes have previously been excavated and refilled. The refilled volumes may provide structural support for later-excavated volumes. Reinjection of the barren waste may reduce surface disturbance and reclamation requirements. When used in conjunction with borehole mining, the systems described herein may include a surge tank to regulate the flow of material to the systems.

[0081] The ablation process described herein may also be used to process feedstocks from other types of mining operations, such as open-pit mining or underground mining. In such operations, ore may be mined conventionally and processed by ablation, for example, near the mine. The barren waste may be returned to the mine, leaving a small bearing fraction. The bearing fraction may be transported elsewhere for further processing. By separating the ore by ablation near the mine, transportation costs may be greatly reduced.

[0082] In some embodiments, the ablation process described herein may be used to process material having a concentration of mineral components too low for economic recovery by conventional processes. For example, waste or overburden from other mining operations may be processed using ablation. Furthermore, materials may be treated by ablation to aid in environmental remediation, such as by lowering the concentration of chemical species in material previously mined. For example, the ablation process may be used for remediation of contaminated land near mines no longer operating. In such embodiments, the goal may be clean-up of a site. The chemical species recovered may be disposed of (the mass containing the chemical species being much smaller than the total mass initially contaminated), sold, or further processed.

[0083] The system and method disclosed herein may be scaled as dictated by constraints of a particular application (e.g., cost, portability, operating footprint, etc.). For example, the system **100**, **200** may have a capacity of from about 750 to about 1,000 lbs per hour (about 340 to about 454 kilograms per hour), and may fit within the frame **180**, as shown in FIG. **13**. Other systems **100**, **200** may have a capacity of about 40,000 lbs per hour (about 20 tons per hour or 18,100 kilograms per hour) or more. The capacity of the system **100**, **200** may be varied by varying the capacity of individual components, as known in the art. The capacity of the nozzle assembly **114** may be varied by varying the size and/or number of nozzles **116** or the particle size distribution of the mixed heterogeneous material **106** entering the system **100**, **200**.

[0084] The systems and methods disclosed herein may be used to quickly separate portions of materials using water, without the addition of chemical reactants. Water may provide energy to physically dissociate the portions into discrete particles that may be separated based on particle size and density. In materials having coatings or patinas, the methods may significantly reduce the amount of material to be further processed to recover various components.

[0085] For example, in the processing of typical sandstone-hosted uranium ores, 95% or more of the uranium-containing compounds may be concentrated into 10% of the mass, with the remaining 90% of the mass containing only about 5% or less of the uranium-containing compounds. For example, the majority of the uranium may be in particles that pass through a 325-mesh or 400-mesh screen (i.e., particles smaller than about 0.0017 in. (0.044 mm) or 0.0015 in. (0.037 mm) diameter). In ores having relatively lower initial concentrations of uranium, the separation may be relatively less effective.

[0086] Slurry pumps (e.g., slurry pump **104**) conventionally have an upper limit on the size of particles that can be processed in a slurry. Removal of particles larger than a selected size (e.g., larger than about 0.25 in. (6.35 mm)) may enable the use of a smaller pump **104** than would otherwise be utilized if these larger particles were present. However, in the processing of uranium ores, removal of such larger particles does not significantly affect uranium recovery because this ore fraction contains virtually no uranium.

[0087] The following examples serve to explain embodiments of the present disclosure in more detail. These examples are not to be construed as being exhaustive or exclusive as to the scope of this present disclosure.

EXAMPLES

Example 1

Silicate-Plated Gold Processing

[0088] Precious metal ores were extracted from hydrothermal deposits by conventional mining techniques. The ores contained micro-fine gold particles having silicate patinas. The silicate patinas interfered with gravity separation of the gold-bearing particles from barren material. The silicate chemistry made the patinas difficult to remove chemically. The ore was crushed, mixed with water to form a slurry, and passed through a pair of opposing nozzles, each having an exit diameter of 0.5 in. (12.7 mm), directed to an impact zone **118**, as in the nozzle assembly **114** shown in FIG. **4**, at a flow rate of 100 gpm (6.3 l/s) and a pressure of 32 psi (221 kPa). The collision of the opposing slurry streams imparted enough energy to the gold particles to remove the silica patinas after each particle had passed through the nozzle assembly **114** an average of 40 times. The process was performed in batch mode, such that an entire batch of ore was continuously recycled through the nozzle assembly **114** until the patinas were removed from the gold particles. With the patinas removed, the gold was recovered by conventional gravity separation.

Example 2

Oil-Contaminated Sand Processing

[0089] A sample of oil-contaminated sand was prepared by mixing a volume of sand with crude oil. The oil-contaminated sand was mixed with water and a bio-degradable wood product (available from LBI Renewable, of Buffalo, Wyo., under the trade name DUALZORB®) to form a slurry, and the slurry was passed through a pair of nozzles, each having an exit diameter of 0.5 in. (12.7 mm), directed to an impact zone **118**, as in the nozzle assembly **114** shown in FIG. **4**, at a flow rate of 40 gpm (2.52 l/s) and a pressure of 32 psi (221 kPa). The collision of the opposing slurry streams imparted enough energy to the sand to remove the crude oil coating from the sand after each particle of sand had passed through the nozzle assembly **114** an average of two times. Upon removal of the oil coating from the sand, the wood product absorbed the oil. The process was performed in batch mode, such that an entire batch of sand was recycled through the nozzle assembly **114** until the oil was removed from the sand. The cleaned sand was separated from the oil-soaked wood product and water.

[0090] The process may alternatively be performed with a surfactant (e.g., a liquid surfactant) instead of or in addition to the bio-degradable wood product. The surfactant may promote the mixture of oil with the water. The surfactant or the wood product may prevent the oil from re-coating the sand after the sand leaves the impact zone **118**.

Example 3

Uranium Ore Processing

[0091] Uranium ores were mechanically extracted from a sandstone formation. The ores contained oversize materials that contained only minimal amounts of uranium. A patina of deposited fine uranium minerals coated non-uranium-bearing grains. The ores also contained fine deposits of non-uranium-bearing minerals. The ore was crushed and screened to remove the oversize materials larger than about 0.25 in. (6.35 mm). The grains and fines were processed in the system **100** shown in FIG. **3**. The grains and fines were mixed with water to form a slurry having about 20% solids by weight. The slurry was pumped through a pipe having vanes to increase uniformity of the slurry, split into two streams, and passed through a pair of nozzles, each having an exit diameter of 0.5 in. (12.7 mm) directed toward an impact zone at a flow rate of 30 gpm (1.89 l/s) and a pressure of 32 psi (221 kPa). The nozzle diameter may be any appropriate size, such as 0.375 in. (9.53 mm). The collision of the opposing slurry streams imparted enough energy to the ore particles to physically remove the fines from the grains after each particle had passed through the nozzle assembly **114** an average of 15 times. With the fines removed, grains were separated from fines by screening. The fines were classified by density in a vertical column, producing a uranium-rich heavy (i.e., dense) fraction and a barren light fraction. The heavy fines were a small portion of the run-of-mine ore and were determined to be suitable for further refining (e.g., by conventional chemical means). The light fines, grains, and oversize materials were analyzed and it was determined that the concentration of uranium was low enough that the materials were suitable for use as backfill. Water used in the ablation process was found to contain dissolved uranium and radium. These elements were recovered from the water via ion exchange and reverse osmosis.

Comparative Example 4

Particle-Size Distribution of Crushed Ore and Uranium Distribution as a Function of Particle Size

[0092] A sample of uranium-bearing sandstone was mechanically crushed just enough to break joints between grains, leaving the underlying grain structure intact. The crushed ore was segregated by screening to remove particles larger than 0.25 in. (6.35 mm). The sample included a mixture of ores from multiple sandstone-hosted uranium deposits located in the western United States. However, despite being from different deposits, each ore exhibited common characteristics, including an identifiable grain structure of quartz and feldspars, similar pre-ablation size distributions, and the presence of carbonaceous materials up to 25.4 mm (1 in.) in size.

[0093] Like ores from many sandstone-hosted deposits, the ores tested had clearly identifiable grains ranging in size from less than 1 mm to more than 10 mm. As shown in FIG. **15**, one portion of an ore sample is characterized by relatively large grains. As shown in FIG. **16**, taken at the same magnification, another portion of the same ore has a relatively finer grain structure. A range of grain sizes within ore from a single deposit is typical of ore from sandstone-hosted deposits. The presence of carbonaceous materials with high post-depositional element concentrations, including uranium, is also typical of sandstone-hosted uranium ores. Carbonaceous material fragments are visible in FIG. **16** as black material. From the same ore, FIG. **17** shows carbonaceous material embedded in the patina surrounding a grain.

[0094] Of the crushed ore that passed through a 0.25-in. (6.35-mm) screen, about 75% of the mass is in particles larger

than 60-mesh (about 0.0098 in. (0.25 mm)), with decreasing percentages present in successively smaller size fractions. The average particle-size distribution of the particles smaller than about 0.25 in. (6.35 mm) is shown in FIG. **18** for the ores tested, including range bars showing the variation between the samples analyzed.

[0095] The separated particles were tested for uranium content by X-ray fluorescence (XRF). FIG. **19** shows the percentage of uranium in each size fraction smaller than 0.25 in. (6.35 mm). In general, the uranium mass distribution corresponds to the total mass distribution. FIG. **19** suggests that, in some sandstone-hosted uranium deposits, removal of a minus 0.25-in. size fraction by screening also removes a corresponding percentage of the uranium in the deposit. Further, removal of any fraction other than the plus 60-mesh size fraction would result in only a marginal reduction in the amount of ore remaining to be further processed.

Example 5

Particle-Size Distribution of Ablated Crushed Ore and Uranium Distribution as a Function of Particle Size

[0096] A sample of uranium-bearing sandstone was mechanically crushed for processing by ablation. The crushed sandstone was mixed with water to form a slurry, and passed through a pair of opposing nozzles, each having an exit diameter of 0.5 in. (12.7 mm), directed to an impact zone, as in the nozzle assembly **114** shown in FIG. **4**, at a flow rate of 30 gpm (1.89 l/s) and a pressure of 32 psi (221 kPa). The collision of the opposing slurry streams imparted enough energy to the sandstone particles to remove the patinas and carbonaceous materials after each particle had passed through the nozzle assembly **114** an average of 40 times. The process was performed in batch mode, such that an entire batch of ore was continuously recycled through the nozzle assembly **114** until the patinas were removed from the grains. The fines were separated into light fines and heavy fines by elutriation, such as by an elutriator **200** (see FIGS. **8** and **9**).

[0097] A sample of the light fines was tested for elemental concentrations by XRF. A sample of the sandstone from which the particles were extracted (i.e., a sample that was not processed by ablation) was also tested by XRF. Table 1 lists the concentration of various elements in parts-per-million (ppm) in the light fines and in the sandstone. Carbon is not present in this analysis because the XRF analysis does not measure carbon.

TABLE 1

Concentration of elements in samples tested in Example 5

Element	Concentration in light fines (ppm)	Concentration in Sandstone (ppm)
As	25	6.1
Ba	1,468	341
Bi	307	ND
Ca	>100,000	2,886
Cl	1,891	ND
Cr	30	14
Cu	67	ND
Fe	11,800	5,974
Hg	12	ND
K	28,200	28,500
Mn	664	39

TABLE 1-continued

Concentration of elements in samples tested in Example 5

Element	Concentration in light fines (ppm)	Concentration in Sandstone (ppm)
S	21,300	9,270
Sb	1,181	ND
Sr	779	63.8
Ti	1402	840
U	59,300	683
V	411	40
Zn	53	10.3
Zr	105	101

ND = not detected

Example 6

Concentration of Uranium in Heavy Fines as a Function of Particle Size

[0098] A sample of heavy fines was tested from the uranium-bearing sandstone processed by ablation in Example 5. The sample of heavy fines was screened through successively finer screens to 600-mesh. After screening, the uranium concentration in each fraction was measured. The uranium concentration increased as the particle diameter decreased, never reaching an inflection point. This suggests that ablation of the sandstone forms uranium-containing fines small enough to pass through a 600-mesh screen.

Example 7

Concentration of Uranium in Slurry

[0099] Slurry was tested from the sample of uranium-bearing sandstone processed by ablation in Example 5. The slurry (including heavy fines and light fines) was centrifuged at 3,000 rpm for 50 minutes. The supernatant (liquid) was tested by inductively coupled plasma optical emission spectroscopy (ICP-OES) with a spectrometer available from Spectro Analytical Instruments GmbH, or Kleve, Germany, under the trade name CIROS® VISION, and determined to have a uranium concentration of 16 ppm. This supernatant was then filtered through a 0.45-μm filter. The filtered supernatant was tested by ICP-OES, and the uranium concentration was below the lower detection limit (approximately 1 ppm) of the ICP-OES spectrometer. The removal of uranium by a 0.45-μm filter suggests that the uranium present in the solution after centrifuging was primarily colloidal or near-colloidal in size, rather than dissolved.

[0100] In Examples 5 through 7, ablation appears to dissociate carbonaceous materials from the patinas and cementing minerals, before breaking the carbonaceous materials down into smaller fragments as light fines. However, because some carbonaceous materials are bonded together independent of coatings of grains of larger materials, some carbonaceous materials tend to remain as particles larger than minus 400-mesh particles (i.e., particles that pass through a 400-mesh screen). The mineralized patina, which appears to have relatively weaker bonds between particles of the patina, forms relatively smaller particles. After ablation, fragments of the carbonaceous material remain within each size fraction separated by the screens.

[0101] The characteristics of each uranium-bearing fraction of the ore—the pulverized mineral patina and the car-

bonaceous material—make both easily separable from the uranium-barren materials after ablation. Because the ablated uranium mineral patina is very fine, it can be separated from the barren fractions by simply screening and capturing all the materials smaller than a selected size. In contrast, fragments of the carbonaceous materials are present in each size fraction after ablation. However, because the carbonaceous materials have relatively low specific gravities, they can be separated from barren materials in each post-ablation size fraction by elutriation. Because the carbonaceous materials have specific gravities only slightly higher than that of water, elutriation can efficiently separate these particles from the barren grains and cementing minerals. Thus, after removal of the fine particles by screening and removal of the light particles by elutriation, the remaining material may include virtually no uranium, enabling an almost complete recovery of the uranium from the ore by further processing (e.g., by chemical means) of only the fines and the light particles.

Example 8

Uranium Content of Size Fractions Before and after Ablation

[0102] A sample of uranium-bearing sandstone was mechanically crushed, as described in Example 4. The ore was screened to remove materials larger than 0.25-in. (6.35 mm). After screening, the ore was weighed to determine the volume of culinary water necessary to perform ablation. For sandstone-hosted uranium ores, the ablation system operates at peak efficiency with slurry densities of between about 10% and about 20% (i.e., when the slurry contains from about 10% to 20% solids by mass). With the appropriate volume of water added to the ablation system, the slurry pump circulated water through a mixing device, a splitter, nozzles, and a tank. The ore sample was then added to a hopper feeding the tank, and the resulting slurry was circulated through the ablation system at a flow rate of 30 gpm (1.89 l/s) and a pressure of 32 psi (221 kPa). The ablation system included a pair of opposing nozzles, each having an exit diameter of 0.5 in. (12.7 mm).

[0103] Samples of the slurry were collected after 1, 2, 5, 10, 20, and 50 minutes. At each time interval, a small amount of the slurry was discharged into a clean 5-gallon bucket. Each sample was screened through a 60-mesh stainless steel GILSON® screen and the captured material (the plus 60-mesh fraction) was tested by XRF to determine its uranium concentration. The uranium concentration in the plus 60-mesh sample was compared to the uranium concentration in a pre-ablation plus 60-mesh sample to determine at what point ablation had effectively removed the mineralized patina from the grains. Ideally, an ablation time may be determined during which the mineralized patina is removed, but the grains themselves do not break down, maximizing the volume of barren grains that can be separated from the pulverized uranium bearing patina by screening.

[0104] For these samples, a comparison of the uranium concentrations in the pre- and post-ablation plus 60 fractions suggested that, after 5 minutes, ablation had effectively removed the mineralized patina. Various factors may affect ablation time, including the thickness of the patina, the mass distribution of the pre-ablated material, and the shape of the underlying grain.

[0105] The material removed from the ablation system after 5 minutes was passed through a series of GILSON® screens ranging from 60-mesh to 325-mesh. The sample captured on each screen was dried, weighed, and analyzed by XRF to determine both the mass and uranium balance of each sample. FIG. **20** shows the percentage of total mass and percentage of uranium mass in each size fraction smaller than 0.25 in. (6.35 mm), for both the ablated sample (after five minutes) and an unablated sample. In addition, the clarified post-ablation water was analyzed to determine how much uranium dissolved in the water during ablation.

[0106] The difference between the unablated sample and the ablated sample illustrates how ore from sandstone-hosted uranium deposits behaves during ablation. When effectively ablated, the mass of particles of sandstone-hosted uranium ores showed a minor shift from larger to smaller size fractions, whereas the uranium was almost completely concentrated into the minus 325-mesh fraction (see FIG. **20**).

[0107] Prior to ablation, the plus 60-mesh fraction contained about 74% of the total mass and 46% of the uranium. After ablation, this fraction contained about 73% of the total mass but only 1.8% of the uranium. Before ablation, the minus 325-mesh fraction contained about 3% of the total mass and 10.4% of the uranium. After ablation, this fraction contained about 7% of the total mass and 94.9% of the uranium. It is believed that the increase in mass in the fines and the almost complete transfer of uranium into the minus 325-mesh fraction both occur because, during ablation, the mineralized patina around the grain is removed and pulverized into particles smaller than 325-mesh. The residual uranium in the plus 325-mesh fractions appears to be in fragments of carbonaceous material.

[0108] Samples of the clarified ablation water collected at 1, 2, 5, 10, 20 and 50 minutes were analyzed using XRF. FIGS. **21** and **22** collectively show the concentrations of the seven elements detected consistently in the ablation water (As, Cl, K, Rb, S, Sr, and U) as a function of ablation time. The uranium concentration in the ablation solution was 22 ppm after one minute of ablation, which represents 27.9% of the uranium in the head ore. The uranium concentration increased to 25 ppm after five minutes of ablation.

[0109] The tests performed on sandstone-hosted uranium ores show that, within five minutes, the ablation process concentrates almost all of the non-solubilized uranium into a very small fraction of the original ore. An average of 95% of the non-solubilized uranium was present in the minus 325-mesh material, which accounted for between 5% and 7% of the mass of the ablated ore. Therefore, after 5 minutes of ablation, if all materials larger than 325-mesh were removed from the post ablation slurry stream, and only the minus 325-mesh post ablated material were subsequently processed, a 95% recovery of the uranium would be possible. Furthermore, subsequent processing could be reduced by between 93% and 95% (corresponding to the 93%-95% of material that need not be further processed). Higher mass reductions and recovery rates can be achieved by elutriating and capturing the light carbonaceous materials that remain in each fraction after ablation. However, even without elutriation, the ablation-only recovery rates compare favorably to conventional mining methods because, although 95% is roughly equivalent to the recovery achieved by leaching, ablation accomplishes this recovery in five minutes, using only culinary water, and does so while reducing by 90% or more the volume of ore that needs to be processed to recover the uranium.

[0110] Another way to gauge the effectiveness of ablation on sandstone-hosted ores is to visually compare unablated and ablated samples of the same ore. The pre-ablated sample

of Example 8 had clearly identifiable grains, but, because of the adhered mineral patina, the underlying grain itself was hidden from view (see FIG. **23**). The patina-coated grains had a grayish appearance. In addition, identifiable fragments of the carbonaceous materials were visible, often embedded or partially coated in the mineralized patina. In comparison, the ablated grains were clearly identifiable and free of mineralized patina (see FIG. **24**). Ablated fragments of carbonaceous materials were interspersed with these grains.

Example 9

Ablation with Deionized Water

[0111] A sample of uranium-bearing sandstone was mechanically crushed and ablated, as described in Example 8. However, deionized water was used as the liquid component of the slurry. The ablation slurry had a distinct silvery appearance that never settled out of the ablation slurry during centrifugation. This supernatant was then filtered through a 0.45-μm filter and analyzed using XRF. No uranium was detected in the filtered ablation water. A portion of the supernatant that had not been filtered was also analyzed using XRF, and found to contain uranium. This suggests that the ablation slurry, before filtering, contained micro-fine uranium material. The micro-fine material appears to be small enough to remain in suspension, and may include other post-depositional elements that would be dissolved into untreated water (e.g., water having dissolved carbonates) if untreated water were used as the slurry fluid.

[0112] When sandstone-hosted uranium ores are ablated with untreated water (e.g., culinary water, ground water, etc.), some of the uranium may dissolve into the ablation fluid. The amount dissolved varies depending on the deposit and the water used, but may range from one-tenth to one-third or more of the total uranium in the ore. Without being bound to a particular theory, it is believed that naturally occurring carbonates in the untreated water solubilize some of the uranium from the ore during ablation.

[0113] While the disclosure is susceptible to various modifications and alternative forms, specific embodiments have been shown by way of example in the drawings and have been described in detail herein. However, the disclosure is not intended to be limited to the particular forms disclosed. Rather, the disclosure is to cover all modifications, equivalents, and alternatives falling within the scope of the disclosure as defined by the following appended claims and their legal equivalents. In addition, features from one embodiment may be combined with features of another embodiment while still being encompassed within the scope of the present disclosure as contemplated by the inventors. Further, embodiments of the present disclosure have utility in the processing of various types of heterogeneous materials.

What is claimed is:

1. A system for processing a heterogeneous material, comprising:

a conduit for a pressurized fluid; and

a nozzle assembly in fluid communication with the conduit, the nozzle assembly comprising a plurality of adjustable nozzles configured such that streams comprising a heterogeneous material passing through each of the plurality of adjustable nozzles intersect after passing through the plurality of adjustable nozzles.

2. The system of claim **1**, further comprising a pump configured to deliver the pressurized fluid and particles of the heterogeneous material to the nozzle assembly.

3. The system of claim **2**, further comprising a borehole mining assembly in fluid communication with the pump.

4. The system of claim **1**, further comprising a splitter configured to divide the heterogeneous material into a plurality of streams, each stream of the plurality in fluid communication with one adjustable nozzle of the plurality.

5. The system of claim **1**, further comprising a gravity separation system configured to receive at least a portion of the plurality of streams of the heterogeneous material and separate solid particles of the heterogeneous material according to density of the solid particles.

6. The system of claim **5**, wherein the gravity separation system comprises a vertical column configured to contain water flowing upward in a turbulent regime.

7. The system of claim **6**, wherein the gravity separation system comprises a plurality of inlets, each configured to direct water upward in the vertical column.

8. The system of claim **1**, wherein the nozzle assembly comprises two adjustable nozzles opposingly oriented over a recovery tank.

9. The system of claim **1**, wherein the nozzle assembly comprises a first cylindrical flow channel having a first cross-sectional area and a second cylindrical flow channel having a second, smaller cross-sectional area, wherein the nozzle assembly is configured to pass the heterogeneous material through the first cylindrical flow channel before passing the heterogeneous material through the second cylindrical flow channel.

10. The system of claim **9**, wherein the second, smaller cross-sectional area is from about 5% to about 20% of the first cross-sectional area.

11. The system of claim **9**, wherein the nozzle assembly comprises a third cylindrical flow channel having a third cross-sectional area, the third cross-sectional area smaller than the second, smaller cross-sectional area, wherein the nozzle assembly is configured to pass the heterogeneous material through the second cylindrical flow channel before passing the heterogeneous material through the third cylindrical flow channel.

12. A system for processing a heterogeneous material, comprising:

a conduit for a pressurized fluid;

a nozzle assembly in fluid communication with the conduit, the nozzle assembly comprising an adjustable nozzle configured such that a stream of a heterogeneous material passing through the adjustable nozzle contacts a surface approximately perpendicular to the surface after passing through the adjustable nozzle; and

a separation system configured to separate particles of the heterogeneous material into a first fraction and a second fraction, the particles of the first fraction having a first average property, and the particles of the second fraction having a second average property different from the first average property.

13. The system of claim **12**, wherein the first average property and the second average property of the particles each comprise a property selected from the group consisting of density, size, electrostatic charge, shape, and magnetic character of the particles of the heterogeneous material.

14. A method of processing a heterogeneous material, comprising:

entraining heterogeneous particles of a material into a fluid stream;

passing the fluid stream through at least one adjustable nozzle;

impacting the fluid stream to ablate the heterogeneous particles of the material; and

classifying the heterogeneous particles.

15. The method of claim **14**, wherein entraining heterogeneous particles into a fluid stream comprises mixing the heterogeneous particles with a fluid to form a slurry.

16. The method of claim **14**, wherein impacting the fluid stream to ablate the heterogeneous particles comprises impacting a plurality of streams flowing in a laminar regime.

17. The method of claim **14**, further comprising crushing a heterogeneous material and removing particles having an average diameter larger than a selected value from the heterogeneous material before entraining the heterogeneous particles into the fluid stream.

18. The method of claim **14**, wherein impacting the fluid stream to ablate the heterogeneous particles comprises impacting the fluid stream with at least another fluid stream containing heterogeneous particles within a nozzle assembly.

19. The method of claim **18**, wherein impacting the fluid stream with at least another fluid stream comprises colliding heterogeneous particles entrained in the fluid stream with heterogeneous particles entrained in the at least another fluid stream.

20. The method of claim **14**, wherein impacting the fluid stream comprises colliding heterogeneous particles entrained in the fluid stream with a solid object.

21. The method of claim **14**, wherein classifying the heterogeneous particles comprises classifying the heterogeneous particles based on density.

22. The method of claim **21**, wherein classifying the heterogeneous particles based on density comprises separating at least a portion of the heterogeneous particles in a gravity-based separator.

23. The method of claim **22**, wherein separating at least a portion of the heterogeneous particles in a gravity-based separator comprises separating the at least a portion of the heterogeneous particles in a vertical column of water.

24. The method of claim **14**, wherein entraining heterogeneous particles into a fluid stream comprises mixing uranium ore with water.

25. The method of claim **14**, wherein entraining heterogeneous particles into a fluid stream comprises mixing oil-contaminated sand with water.

26. The method of claim **14**, wherein entraining heterogeneous particles into a fluid stream comprises entraining the heterogeneous particles in water substantially free of a reagent.

* * * * *