CORRECTIVE ACTION GUIDANCE DOCUMENT

Colorado Department of Public Health and Environment

Hazardous Materials and Waste Management Division
Colorado Department of Public Health and Environment

(303) 692-3300

Version One
May 2002

The Hazardous Materials and Waste Management Division has developed this document with the hope that its use will streamline and expedite the cleanup of contamination sites by providing guidance on the goals, expectations and strategies of the corrective action process, emphasize maximum use of program flexibility, encourage the use of innovative methods, shift more of the responsibility to achieve goals to the party performing the work, and by encouraging the use of results-based approaches. These cleanup reforms have slowly been incorporated into the corrective action program over the last several years, and they will continue to be introduced as new methods and tools become available. The Division therefore intends to periodically update this document as new opportunities arise that allow us to achieve program goals more quickly and efficiently. To assist us in this effort, we welcome any comments or recommendations you may have with regard to the contents of this guidance document, its application, or if you have new ideas that would aid in reforming the process even further. Your comments should be mailed to:

Colorado Department Of Public Health and Environment
Hazardous Materials and Waste Management Division
HMWMD-HWC-B2
4300 Cherry Creek Drive South
Denver, Colorado 80246-1530
Attn: Walter Avramenko

September 2005 – Citations to the Basic Standards for Groundwater were updated

Acknowledgments

In February 1999, the Colorado Department of Public Health and Environment (the Department) convened a working group to act as a steering committee to assist in the development of a mechanism to improve the RCRA corrective action process for both the regulatory agencies and the regulated community. The representatives of this committee included members of the regulatory agencies, environmental consultants, environmental attorneys, and facility operators, some of whom were acting on behalf of the Colorado Association Of Commerce and Industry. Their task was to identify, discuss and seek alternatives to the major issues and concerns that impact the corrective action process. The objective of this committee was to improve the overall RCRA corrective action process by incorporating efficiency improvements and streamlining its technical and regulatory requirements. The final product was anticipated to be a written corrective action guidance document.

Once the primary issues of concern were identified, a work group of committee members was tasked with identifying and incorporating flexible, results-based procedures into an outline of the desired corrective action guidance document. With this outline in hand, the Department began drafting each element of the guidance document and provided them to the work group for their review as soon as they became available. Following each review, the draft document was modified, to the extent possible, to incorporate the comments and recommendations made. This iterative process was essentially completed in 2001 when the work group approved the final draft that subsequently become the guidance document you have before you.

Special thanks go to all members of the committee and work group, as well as to other participating individuals. They include:

Paul Arell – U.S. Environmental protection Agency, Region VIII
Walter Avramenko – Colorado Department of Public Health and Environment
Bill Bath – Lockheed Martin Space Systems Company
Gary Baughman - Colorado Department of Public Health and Environment
Susan Chaki - Colorado Department of Public Health and Environment
David Chamberlin – Camp Dresser & McKee
Fred Dowsett - Colorado Department of Public Health and Environment
Greg Fletcher – Conoco, Inc.
Kathy Hotovec - Colorado Department of Public Health and Environment
Frank Johns – ARCADIS Geraghty & Miller
Charles Johnson - Colorado Department of Public Health and Environment
James LaVelle - Camp Dresser & McKee
Tom Meyers – Conoco, Inc.
Eugene Riordan – Vranesh & Raisch, LLP
Dennis Smith – Technical & Management Systems & Services
Elizabeth Temkin - Temkin, Wielga & Hardt, LLP

TABLE OF CONTENTS

1.0 INTRODUCTION 1
2.0 PROGRAM BACKGROUND INFORMATION 2
2.1 Legislative Authority 2
2.2 Universe Of Sites 2
2.3 Information Requirements 3
2.4 Review Time Frame And Costs 4
2.5 Enforcement Authority 5
2.6 Public Participation 5
3.0 THE DEPARTMENT'S ROLE IN THE CORRECTIVE ACTION PROCESS 7
3.1 Variable Oversight 8
3.1.1 Range of Approach Options Based on Technical Complexity of Site 9
3.1.2 Range of Approach Options Based on Willingness and Technical Ability 9
3.1.3 Determination of Oversight Level 11
3.1.4 Other Factors that may Influence the Level of Oversight 12
3.1.5 Use of Professional Judgment in Deciding Level of Oversight in the Absence of Data 14
3.2 Document Review And Approval 15
3.3 Field Oversight 16
3.4 Corrective Action Oversight Mechanisms 17
3.5 Alternative Modes Of Communication 19
Table 1 Corrective Action Variable Oversight Process 20
Table 2 Technical Characteristics That Influence Site Complexity 21
Table 3 Resource And Behavioral Characteristics That Influence Level Of Oversight 23
Table 4 Documents Subject To Review And Approval By The Department 24
4.0 THE SITE CHARACTERIZATION INVESTIGATION 25
4.1 Source Identification 26
4.2 Site Setting 26
4.2.1 Surface Characteristics 26
4.2.2 Subsurface Characteristics 27
4.3 Nature And Extent Of Contamination 27
4.3.1 Determination Of Extent Of Contamination 28
4.3.2 Field Screening 30
4.3.3 Characterization Methodology 30
4.4 Sampling And Analysis 31
4.4.1 Representative Samples 34
4.4.2 Sampling And Analytical Methods 35
5.0 REMEDY SELECTION 35
5.1 Screening Risk Limits, Performance Standards And Final Cleanup Levels 36
5.1.1 Principal Threat Wastes And Screening Risk Limits 37
5.1.2 Performance Standards 38
5.1.2.1 Waste 38
5.1.2.2 Soil 38
5.1.2.3 Ground water 39
5.1.3 Final Cleanup Levels 39
5.1.3.1 Ground Water Cleanup Levels 40
5.1.3.2 Surface Water Cleanup Levels 41
5.1.3.3 Soil Cleanup Levels 41
5.1.3.4 Indoor Air Cleanup Levels 42

5.2 Risk Management Decisions 42
5.2.1 Interim Measures 43
5.2.2 Engineering Controls 46
5.2.3 Land Use Considerations 47
5.2.4 Institutional Controls 48
5.3 Timing Of Remedy Implementation 51
5.3.1 Single Step Remedy Implementation 51
5.3.1 Phased Remedy Implementation 52
5.3.2 Short-Term Management Options 52
5.3.3 Long-Term Management Options 53
Table 5 Risk Management Decisions – Soil 55
Table 6 Risk Management Decisions – Ground water 56
5.4 Selecting A Remedy 57
5.4.1 Presumptive Remedy 57
5.4.2 Innovative Technologies 58
5.4.3 Proposing A Remedy 59
6.0 EFFECTIVENESS MONITORING DURING REMEDY IMPLEMENTATION 61
6.1 Performance Evaluation And Compliance Monitoring Plan 61
6.2 Performance Evaluation Reporting 63
7.0 COMPLETION OF THE CORRECTIVE ACTION PROCESS 64
7.1 Non-Restricted Use 65
7.2 Restricted Use 65
7.3 No Further Action Letter 65
7.4 Voiding a No Further Action Letter 66
GLOSSARY 67
CORRECTIVE ACTION GUIDANCE REFERENCE LIST 72
Site Investigation 72
Ground Water 72
Analytical / Sampling 73
Remediation 74
Presumptive Remedies 75
Risk Assessment 75
OTHER SOURCES OF SITE CHARACTERIZATION AND REMEDIATION INFORMATION 78

APPENDIX 1 CORRECTIVE ACTION PROCESS CHECKLISTS A1-1

APPENDIX 2 CONTAINED-OUT DETERMINATION PROCEDURE FOR ENVIRONMENTAL MEDIA CONTAMINATED WITH RCRA HAZARDOUS WASTE A2-1
1.0 Purpose A2-1
2.0 Background A2-1
3.0 Contained-Out Determination Criteria A2-1
3.1 Contained-Out Determination Criteria for Environmental Media That Exhibit a Characteristic of Hazardous Waste A2-2
3.2 Contained-Out Determination Procedure for Environmental Media Contaminated With Listed Hazardous Waste A2-2
3.2.1 Contained-Out: Unrestricted Use A2-2
3.2.2 Contained-Out: Restricted Use A2-3
4.0 Land Disposal Restrictions A2-4
5.0 Examples A2-4
Table A2-1 Contained-Out Determination Procedure for Environmental Media Contaminated With RCRA Hazardous Waste A2-9

Flowchart A2-1: Contaminated Environmental Media – Do The LDRs Apply? A2-11
Flowchart A2-2 How The LDRs Apply To Soil Contaminated With Listed Hazardous Waste A2-12
Attachment A2-1 Effective Dates of Surface Disposed Wastes (Non-Soil and Debris) Regulated in the LDRs - Comprehensive List A2-13
Attachment A2-2 Table UTS - Universal Treatment Standards A2-37

APPENDIX 3 MANAGEMENT OF REMEDIATION WASTE A3-1
1.0 Purpose A3-1
2.0 Definition of Remediation Waste A3-1
3.0 Procedures for Management of Remediation Waste A3-1
3.1 Making a Hazardous Waste Determination for Remediation Waste A3-1
3.1.1 Contaminated Environmental Media Remediation Waste A3-2
3.1.2 Solid Waste Remediation Waste A3-3
3.2 Disposal of Hazardous Remediation Waste A3-3
3.2.1 Disposal of Contaminated Environmental Media Hazardous Remediation Waste A3-3
3.2.2 Disposal of Solid Waste Hazardous Remediation Waste A3-4
3.3 Options for the Management and Disposal of Hazardous Remediation Waste A3-6
3.3.1 Generator 90-Day Storage and Treatment A3-6
3.3.2 RCRA Permitted Storage, Treatment or Disposal Units A3-7
3.3.3 Wastewater Treatment Storage and Treatment Units A3-8
3.3.4 Storage in a Staging Pile A3-8
3.3.5 Storage, Treatment and/or Disposal in a RCRA Corrective Action Management Unit... ..... A3-9
3.3.6 Storage and/or Treatment in a RCRA Temporary Unit A3-10
4.0 Summary A3-10
Flowchart A3-1 Management Of Remediation Waste A3-11
Table A3-1 Desired Management Method For Hazardous Remediation Waste A3-12

APPENDIX 4 CONTACT INFORMATION A4-1

1.0 INTRODUCTION

The goal of the hazardous waste corrective action program is to ensure timely and appropriate stabilization and cleanup of facilities that have experienced spills or other releases of hazardous constituents or wastes. After having administered the corrective action process for many years, the Colorado Department of Public Health and Environment (the Department) recognizes that implementation of the corrective action program may be improved to accelerate the pace of cleanups. Delays have traditionally been attributable to an emphasis on process over actual fieldwork, failure to prepare adequate work plans, a lengthy review and approval process, and a reliance on a multi-phased approach to characterizing and remediating sites. Although the multi-phased, “command and control” approach reduces risks associated with cleanup at a facility, it tends to be resource intensive and may discourage facility owner/operators from undertaking voluntary or accelerated cleanup actions. However, it is no longer necessary to approach contaminated site remediation in such a piecemeal fashion, with gaps in the remediation process while samples are gathered and shipped off for analysis, reports written and results debated before the next phase of the remediation work begins. With the accumulated experience remediating sites and newer and more powerful field analytical tools, site work can proceed seamlessly from investigation to remediation to closeout. Implementation of such a corrective action process should result in improvements to the program's speed, efficiency, and responsiveness, and focus the program more clearly on environmental results.

The primary objectives of the results-oriented process described herein are to:

- create a consistent, holistic approach to cleaning up release sites;
- provide the facility owner/operator with concise statements of the Department's corrective action implementation goals, expectations and strategies;
- improve the speed, efficiency and effectiveness of corrective actions;
- provide predictable and consistent, yet flexible guidance on investigating and remediating sites that focuses on environmental results;
- encourage the use of innovative approaches to expedite cleanups;
- shift more of the responsibilities for achieving the goals of the corrective action process to the regulated community; and
- actively identify and make use of opportunities to streamline and reduce costs.

This document provides an overall program implementation framework and model scopes of work for site characterization, interim actions, evaluation of remedial alternatives and remedy implementation. These minimum technical requirements are meant to ensure the thoroughness and reliability of investigations and cleanups by providing guidance for investigating and/or remediating sites which are contaminated or at which contamination is suspected. Such a program focuses on environmental results rather than process steps and ensures that each corrective action related activity at a given facility directly supports cleanup goals at that site.

Results-based approaches include setting cleanup goals early in the process, providing procedural flexibility in how goals are met, inviting innovative technical approaches, focusing data collection activities on results of remedial activities, and letting owner/operators undertake cleanup actions with reduced Department oversight where appropriate. Under such approaches, owner/operators focus on environmental results and the most technologically efficient means of achieving them while still being held fully accountable. By focusing the corrective action program on achieving positive environmental results through the use of clear, measurable performance standards, the Department hopes to improve the responsiveness, speed and efficiency of corrective actions without sacrificing protection of human health and the environment.

2.0 PROGRAM BACKGROUND INFORMATION

2.1 Legislative Authority

The first federal solid waste law, the Solid Waste Disposal Act, was passed in 1965. In 1976, Congress amended this law by replacing its language entirely with the Resource Conservation and Recovery Act, commonly known as RCRA. RCRA established the framework for managing both solid and hazardous waste. This framework consists of 10 subtitles, including Subtitle C, which gave authority, funding, and directives to the U.S. Environmental Protection Agency (EPA) to develop hazardous waste regulations. These regulations were adopted on May 19, 1980, and were designed for the identification, notification, and management of hazardous waste in ways that protect human health and the environment.

On November 2, 1984, the EPA authorized the implementation of Colorado's hazardous waste management program in lieu of the federal RCRA program. This included corrective action requirements at permitted hazardous waste facilities (Sections 264.100 – 264.100(h)). The laws governing the management of hazardous waste in this state are contained in the Colorado Hazardous Waste Act (C.R.S. 25-15-301 - 316) and the Colorado Hazardous Waste Regulations (6 CCR 1007-3). The regulations have been revised numerous times since that date, including the 1989 authorization to implement corrective action at facilities with releases of hazardous waste.

2.2 Universe Of Sites

There are three categories of facilities at which corrective actions to remediate releases of hazard waste occur. The first category includes interim status facilities that have formally notified the state that they treat, store, or dispose of hazardous waste in regulated units (e.g., container storage pads, waste piles, tanks, surface impoundments, land treatment units, landfills). Facility owner/operators that decide not to obtain a permit for these regulated units are required to close them in accordance with detailed procedures contained within the Colorado Hazardous Waste Regulations. Releases to the environment identified during the closure of these units must be characterized and remediated to achieve specified closure performance standards.

The second category consists of facilities that seek a permit to treat, store, or dispose of hazardous waste in regulated units. This includes facilities that either a) obtain a permit for a new regulated unit or b) are required to obtain a post-closure permit for regulated interim status units that close with waste in place. With regard to the second category, the Department has the option of allowing the facility to conduct post-closure activities under a Compliance Order on Consent which would include many, if not all, of the same corrective action requirements that would be contained in a permit. Regardless of whether the work is being performed under an operating or post-closure permit, the facility owner/operator is required to identify, characterize and remediate releases from solid waste management units across the entire site. Procedures governing the cleanup of these units are contained in the permit issued by the Department.

Although the corrective action process at treatment, storage, disposal (TSD) facilities is governed largely by requirements contained in the Colorado Hazardous Waste Regulations, a permit, or compliance order, many of the same principals and procedures discussed in this guidance document also apply to the cleanup of both hazardous and solid waste management units located at these facilities. The regulations, permit, or order requirements tend to be general in nature and are meant to outline the overall structure of the corrective action process. This guidance document has been designed to provide more details on procedures, methods, and guiding principals that can be used to direct the corrective action process at these sites.

The third category of facilities where corrective actions may take place are non-TSD facilities where hazardous waste is simply generated. Generator sites where hazardous waste has been released into the environment after November 19, 1980 are considered to be unpermitted disposal facilities subject to RCRA regulation with regard to the cleanup of such releases. The Colorado Hazardous Waste Regulations define disposal as "the discharge, deposit, injection, dumping, spilling, leaking, or placing of any solid waste or hazardous waste into or on any land or water so that such solid waste or hazardous waste or any constituent thereof may enter the environment or be emitted into the air or discharged into any waters, including ground waters." The regulations give the Department the authority to require the cleanup of these releases into the environment. The owner/operator of a generator site may utilize the corrective action process outlined in this guidance document to remediate releases of hazardous waste discovered at their site.

2.3 Information Requirements

The RCRA corrective action process consists of three primary activities: characterizing the release, selecting a remedy from identified alternatives, and implementing the selected remedy until the desired remediation goals are achieved. To design a process capable of collecting the information necessary to achieve these primary objectives, the Department relies upon not only this guidance document but others prepared by EPA that which describe all aspects of the corrective action process. A list of references identifying some of the more noteworthy guidance documents may be found at the end of this document. It should be remembered that site specific data or information beyond what is asked for in this or other guidance documents may be required under permits, orders, the regulations, or for other needs of the Department based on site-specific circumstances. Please check with these other sources of guidance or the Department case person assigned to the site to determine whether or not other information needs must be satisfied.

Activity 1: It is the responsibility of the facility owner/operator to collect and present all information necessary to allow it and the Department to characterize the release and evaluate the risks to human health and the environment. Data generated during this phase of the corrective action process should include, but is not limited to, the following:

- define the nature, magnitude, rate of migration, and full horizontal and vertical extent of the release, to the extent necessary, in all affected environmental media (soil, surface water, ground water, and air), including contamination that may have migrated off site;
- identify and characterize the source or sources of the release at the facility in question;
- identify potential nearby receptors of contamination, human or ecological, including surface water bodies, municipal and private ground water users, and nearby residential properties where homeowners may be exposed to surface contamination and/or air emissions.

It is important to fully characterize the release before determining what actions are necessary to remediate it. Although interim measures (see Section 5.2.1) may be needed to reduce or eliminate immediate threats to human health and the environment, effective long term remediation strategies cannot be properly assessed unless the full nature and extent of the release is understood. When conducting site characterization activities, the facility owner/operator should keep in mind the long term performance standards he/she needs to achieve (see Section 5.1).

Activity 2: After the nature and extent of the contamination have been characterized, the facility owner/operator, with the assistance of the Department, must then decide whether remedial actions are necessary. If remediation is determined to be necessary, the following information or activities may be required to identify and evaluate the selected remedial alternatives (see Chapter 5):

- cleanup standards would be selected and agreed upon;
- available and applicable corrective measures should be evaluated in order to select an alternative to efficiently, effectively, and economically clean up the source and associated environmental contamination, including contamination that may have migrated beyond the facility boundary;
- additional site-specific field data may be necessary to evaluate the viability of one or more remedial alternatives;
- the viability of innovative remedial alternatives may need to be supported with research studies and/or case examples as reported in published literature;
- pilot tests may be necessary to help in the design of the remediation system and demonstrate its effectiveness prior to full scale construction.
- design the selected remedial alternative(s).

Activity 3: Once approved by the Department, the facility owner/operator would then implement the selected remedial alternative and collect necessary information to demonstrate that it is achieving the desired goal within an acceptable timeframe (see Chapter 6). This information may include:

- confirmatory samples;
- monitoring data to verify that the selected remedial alternative is operating as necessary to remediate the contamination, that contaminant removal rates are maximized, and that progress is being made towards achieving the cleanup objectives;
- any data that are presented to demonstrate that the cleanup objectives have been achieved and that no further action is required.

The following chapters of this document describe in greater detail what information requirements are expected to be included in plans and reports that may be prepared for Department review.

2.4 Review Time Frame And Costs

There is no regulatory deadline by which documents received under permits or orders are required to be reviewed and responded to. In these cases, the time needed for the Department to review a document depends largely on the priority of the site, its complexity, the risk posed by the contamination, the subject matter of the document and the current workload of staff responsible for performing these reviews. Additional time may be necessary to complete a review if other agencies are involved, the proposal is new and innovative, it is necessary to review large data sets, the site or the work proposed is complex, or problems are identified that require meetings and negotiations with facility representatives. Otherwise, the Department will make its best efforts to take action on all submissions it receives in a timely manner, preferably within 60 calendar days of their receipt.

The Department will use its best efforts to review documents submitted under the Corrective Action Plan rule (Section 100.26 of the Colorado Hazardous Waste Regulations, 6 CCR 1007-3)) and provide a response within the following specified periods of time:

- complete the review of the initial application within 60 days of receipt;
- for simple plans, the Department will spend no more than 40 hours reviewing the document;
- for complex plans, the Department will spend no more than 100 hours reviewing the document;
- under the phased approach, each separate report/plan will be reviewed within 60 days of receipt, with no more than 40 hours being spent reviewing each document;
- completion reports will be reviewed within 30 days, spending no more than 20 hours on this activity.

The Department may charge facility owner/operators for time spent by professional staff and

administrative personnel reviewing corrective action related documents prepared in connection with permits, orders, or the Corrective Action Plan rule. The document review activities that the Department is allowed to charge facilities are summarized in Section 100.32 of the Colorado Hazardous Waste Regulations. Besides charging for time spent determining whether the document is adequate for its intended purpose, the Department may also bill the facility for such things as preparing a formal response to the document, review of other documents related to the site, meetings and negotiations. Please check with the Department to get the most current hourly charge used to calculate review and activity fees.

2.5 Enforcement Authority

Sites that are being remediated through the RCRA corrective action program normally do not require the Department to exert its enforcement authorities as provided for in Part 100 of the hazardous waste regulations and Title 25 Article 15 Sections 308, 309, and 310. Enforcement is unnecessary as long as the work is being performed in a timely manner and to the satisfaction of the Department in accordance with an approved closure plan, permit, post-closure order or Section 100.26 Corrective Action Plan.

There may be circumstances, however, under which the Department or the facility owner/operator may choose to enter into an agreement, called a Compliance Order on Consent, that outlines the terms of the corrective action process. Such an agreement may describe all procedures and activities to be performed during the corrective action process including: what work will need to be performed; what documents need to be submitted; what these documents should contain; the review, modification, and approval of documents; the resolution of disputes; and termination of the corrective action process. The Compliance Order on Consent may be drafted by either the Department or facility owner/operator, the terms of which would then be negotiated and agreed to prior to both parties signing the document. The advantage of a Compliance Order on Consent is that the entire process, from beginning to end, may be specified, thereby providing the facility with some certainty as to what will be expected of them.

In the event that the facility owner/operator fails to implement an approved Corrective Action Plan or Compliance Order on Consent, fails to complete the work required under the plan or order, or fails to initiate or complete the cleanup in a timely manner, the Department has the authority to issue the facility a unilateral Compliance Order to compel the facility to perform the work the Department believes is necessary to protect human health or the environment. The terms of such an Order are not negotiable and go into effect a short time after it is received by the facility. Penalties may be assessed at the time the Compliance Order is issued, and/or penalties may be assessed if the facility owner/operator fails to comply with the requirements of the Order. Compliance Orders may also be issued to facilities where releases of hazardous waste have occurred (illegal disposal) that are identified during either routine or complaint inspections.

2.6 Public Participation

The Department supports the efforts of facility owner/operators to inform the public of corrective action related activities, regardless of whether or not it is mandated by regulation. Community members have a right to be heard and expect government agencies to be open and responsive. The goal of the public participation process is to provide private citizens and public interest organizations with both access to information and opportunities to participate in a process that may ultimately affect their community. Open communication with the public can help the Department, facility and public build trust and positive lasting relationships, which in turn help make better business and technical decisions. Interested members of the public are also viewed as stakeholders who play an integral role in the corrective action process, ensuring that decisions gain a breadth and an appreciation of local circumstances and are not based on technical expertise alone.

The Colorado Hazardous Waste Regulations require public notification or participation in the RCRA corrective action process during the closure of regulated units (Sections 265.112 and 265.118 for interim status facilities) and when a facility is seeking either an operating or post-closure permit (Sections 100.506 through 100.510), or modifications to an existing permit (Section 100.63). In these instances, the public is allowed to review and comment on draft closure plans, post-closure permits, or new operating permits which may contain a process for characterizing and remediating contamination associated with the regulated unit or solid waste management units, monitoring plans for ground water, and plans for responding to detected releases of hazardous constituents to ground water. If requested, the Department also has the discretion to hold a public hearing to discus issues related to the plan or permit that is under review. Subsequent modification of these documents is also subject to similar public notification requirements. Please consult the regulatory citations provided for specific details (public notification, hearings and time frames) on the public participation process involving the permitting or closure of treatment, storage or disposal facilities.

In all other situations, there is no formal requirement to notify or involve the public in the corrective action process. However, it is the Department's opinion that public notification and participation on the cleanup of contamination sites is necessary to a limited extent and under certain circumstances. At the very least, the Department will notify the local health department and/or local government of activities occurring within their area of jurisdiction by providing them with copies of our correspondence or by contacting them directly in order to inform them of the situation. We strongly recommend that the facility owner/operator keep the local authorities informed of their activities by providing them with copies of documents that may be generated during the corrective action process. If the situation warrants it, the facility may also find it necessary to inform other local authorities (e.g., fire department, emergency responders, agencies responsible for issuing required permits, etc.) of planned activities that may require their involvement. This sharing of information will ensure that these agencies are informed of activities occurring within their community, thereby allowing them to participate in the corrective action process if they so desire, and respond directly to questions they may receive from the public.

Depending on circumstances, the facility owner/operator may be encouraged to voluntarily notify the public of its activities through newsletters, public meetings or information repositories, particularly if corrective action activities are conducted off-site in or adjacent to residential areas. The Department will require the facility owner/operator to notify the public, or may do so independently of the facility, in cases where there is a potential for the surrounding public to be exposed to contamination derived from the facility. A few examples include, but are not limited to, cases where private domestic use or irrigation wells may be located within the suspected path of the ground water plume, an effort must be made to locate and perhaps sample registered and unregistered wells in the path of a contaminant plume, or when residential areas must be entered into for the purpose of installing and sampling monitoring wells or collecting indoor air samples.

Notification of the public will always be required in cases where people may be or are presently exposed to levels of contamination that the Department believes may pose a threat to their health. Examples include ground water contamination that has degraded the quality of a known drinking water supply aquifer, contamination that has migrated onto nearby residential properties or if there are exposures to indoor air contaminants derived from the ground water plume. The Department may also require public participation in the corrective action process depending on the remedial alternative selected and the level of community interest. In the event the Department determines that public participation is necessary, the facility owner/operator may be required to develop and implement a community involvement plan which identifies what information will be disseminated to the public, how this will occur and how often. Guidelines for establishing a successful public participation program may be found in EPA's September 1996 "RCRA Public Participation Manual."

In those cases where the facility is operated by one party ("the operator") and the property is owned by another ("the owner"), it is imperative that the two parties communicate and coordinate with one another early in the cleanup process since the actions of one will impact the other. For example, the property owner, from whom the operator leases the property, may have a different cleanup objective in mind (unrestricted use) from the business operator (industrial use), a situation that must be rectified before a final remedy can be proposed. Communication between the parties is also necessary to allocate liability based upon some degree of involvement. Oftentimes the responsible party will take the lead in remediating the release, in which case the other party should be kept informed of all aspects of the cleanup process, even more so than the public since both the owner and operator share some responsibility in cleaning up of the site.

The public is always welcome to come in and review the Department's files on cleanups occurring within their community. Cleanup plans, reports, and written correspondence are contained within the site file, all of which may be reviewed in the Department's Records Center. Arrangements to review the files may be made by calling (303) 692-3331 and providing information determined to be necessary to correctly identify the file.

3.0 THE DEPARTMENT'S ROLE IN THE CORRECTIVE ACTION PROCESS

Experience indicates that the current set of institutional relationships that form the regulatory oversight process accounts for significant time and money spent on the investigation and cleanup of hazardous waste sites. Most cleanup activities are pursued in a framework of extensive government regulation and guidance that outline the cleanup process and the requirements that must be met. Each part of the process involves specific documents--some are defined by regulation, others by guidance, and many by common practice. Literally dozens of documents may be generated in support of the cleanup process. The process of document review is generally highly sequential and inspection oriented and typically involves draft => review => comment => redraft, etc. until the facility gets it "right". This oversight process is often driven by the requirements for documents as the mechanism by which regulators and community interests determine whether human health and the environment will be adequately protected, and that statutory and regulatory requirements are met.

Long time frames and increased costs are the consequences of such a "command and control" oversight process. Use of such an approach at all sites undergoing cleanup would vastly increase the Department's workload, thereby overwhelming its ability to respond in a timely, effective manner. However, this resource intensive approach is neither desirable nor necessary at many sites. Resource savings and efficiencies can be created by recognizing that different sites may have a different priority for oversight attention. In many instances it is neither necessary nor beneficial to exercise the often prescriptive oversight approach that have traditionally been employed remediating sites. The parties involved in the cleanup process must find the proper balance between Department oversight and the facility's ability to meet performance standards on its own. By balancing Department oversight activities with an increased responsibility on the facility owner/operator to do the necessary work and do it right, it is possible to expedite cleanups and focus limited resources on other priorities. Use of this variable oversight approach to tailor the Department's level of involvement at a facility should still, in the end, result in the collection of required data and implementation of a remedy that is protective of human health and the environment. These corrective action objectives remain the same regardless of the Department's level of oversight. This chapter of the guidance identifies criteria for determining the proper level of oversight.

Several opportunities are available to devise a more focused oversight process to address the problem. Activities that may expedite cleanup and make more efficient use of resources include:

- an informal approach to variable oversight, recognizing that all sites do not require equal amounts of attention;
- reliance on a cleanup process that focuses less on process and more on achieving performance goals with the fewest number of iterations;
- requiring facilities to generate fewer documents for review and approval, and;
- using alternative modes of communication.

This proposed oversight process can only work in an environment that is built on open dialogue and trust between the facility, the regulators, and the community. The more common adversarial oversight relationship must be replaced with an understanding that a partnership relationship between all parties involved is the foundation for joint ownership of cleanup decisions and expedited decision-making. A positive working relationship is essential to the success of the variable oversight process offered in this guidance document.

Although the goal is to reach agreement on the cleanup using a collaborative decision-making process, there will be situations where the Department must independently make decisions as to how the corrective action process will proceed. It is ultimately the Department's responsibility to ensure that the regulatory requirements are complied with and human health and the environment are protected, regardless of what the facility owner/operator may wish to do. In these cases the facility owner/operator can suggest remedies but it is up to the Department to decide if these proposals are acceptable.

The guidance contained in this chapter is designed to provide ideas to the Department, facility personnel, and consultants who are struggling to find innovative means to select and implement cleanup actions more rapidly and cost effectively. Guidance provided on how to implement variable levels of oversight is just that -- guidance. The ideas offered should not interfere with ongoing constructive relationships nor should they be interpreted in a manner that creates additional rigidity and complexity to an already difficult process.

3.1 Variable Oversight

In an effort to manage a large workload with limited resources, the Department is required to informally assign different priorities to facilities requiring corrective action. This prioritization of work needing to be completed is suitable for establishing a variable oversight process. For example, low-risk sites and common site types with the potential for repetitive or presumptive remedies require less oversight than a facility with a complex hydrogeologic setting, where there is a potential for individuals to be exposed to contaminants or when the cleanup involves a recalcitrant owner or operator. Not only does the level of oversight vary between facilities, it can also change depending upon the activities or areas within a single facility. Examples include: cleanup of a unit with minimal impact to the environment receives less oversight than the unit with known significant releases; review of a work plan for an interim measure receives less oversight than a proposal to implement a final remedy; subsidiary activities that have little direct impact on the cleanup of a site (conducting a bench scale test) receive less oversight than a document that will directly impact activities at the site (the remedy based upon the bench scale test results).

The varying levels of oversight available to the corrective action process are illustrated in Table 1. According to this table, the level of oversight varies depending on the complexity of the site and the ability and/or motivation of the facility owner/operator to perform the necessary work. The Department's involvement may vary between a low level review and verification process to one in which it must review and approve every aspect of the work being performed. Factors that will be considered in deciding the Department's level of oversight are discussed in the sections below.

Regardless of the Department's level of involvement overseeing the corrective action process, the facility is still required to collect the same information and answer the same questions when characterizing and remediating a site. The variable oversight process simply defines the level of interaction between the Department and facility, not the degree of work that may need to be performed. In the end, all sites will be expected to meet the same cleanup performance standards in order to ensure that human health and the environment are protected.

3.1.1 Range of Approach Options Based on Technical Complexity of Site

Simple Site - These sites are generally characterized by a limited suite of contaminants and limited contamination of ground water. Specific factors to consider in deciding if a site falls into this category are listed in Table 2. If the site generally meets the criteria for a simple site, it is eligible for a low level of oversight by the Department. The appropriate method of dealing with simple sites is to prepare an integrated Corrective Action Plan to the extent allowed by regulation (see Section 3.4). Although an integrated Corrective Action Plan cannot be submitted for a RCRA permitted facility, a similar course of action may be employed within the permitting process. Such a document would report the results of the site characterization effort and also propose a method of cleaning up the release, assuming that this is even necessary. The integrated Corrective Action Plan would, among other things, propose cleanup standards to be used and verification sampling to demonstrate achievement of those standards. If remediation is necessary, a Completion Report would be prepared at the conclusion of the cleanup program. Both the integrated Corrective Action Plan and Completion Report would be submitted to the Department for review and approval.

Moderate Complexity Site - These sites may contain several sources with a limited suite of contaminants and/or the extent of contamination in soils and ground water is spatially confined or occurs in predictable fashion. The level of public scrutiny at these sites is generally low, but an increase in the level of public interest can add to site complexity. Specific factors to consider in deciding if a site falls into this category are listed in Table 2. Under this category, corrective action will generally be phased with potential for development of separate corrective action processes for different source areas or environmental media. The initial phase of corrective action will include characterization of contamination and screening of cleanup alternatives. The second phase of corrective action will include development and implementation of corrective action measures. The third phase of corrective action (may also be included in the second phase) is verification sampling, performance monitoring, and routine operation and maintenance. The final phase would result in the preparation of a Completion Report that would document the success of the remediation effort and request that the corrective action process be terminated. Each phase would require the preparation of work plans and/or reports for Department review and approval.

High Complexity Site - Generally, these sites contain multiple sources and may have a complex suite of contaminants. Extent of contamination may be extensive and variable in soil and ground water, with possible impacts to surface water. Physical complexity of the site may be high. Specific factors to consider in deciding if a site falls into this category are listed in Table 2. Corrective action at a highly complex site also will be conducted in a phased manner similar to what was described for a moderately complex site. However, it may be different in that each phase may itself be divided into discrete iterative steps because of technical difficulties inherent in evaluating a complex site. Each of the discrete phases will require the facility to prepare and submit work plans and reports for Department review and approval.

3.1.2 Range of Approach Options Based on Willingness and Technical Ability

The Department's oversight process will also vary based on both the willingness and technical ability of the facility to adequately carry out the corrective action. Factors to consider when deciding which category a facility falls into are listed in Table 3.

Where the facility owner/operator has a high level of ability and willingness to perform the corrective action, the Department's role shall vary between verification of meeting performance goals for simple sites to an increasingly collaborative process for more complex sites. For such facilities, the primary guiding principle will be development of performance measures and verification that performance is achieved.

Where the facility owner/operator is reluctant or unwilling to perform the corrective action, the oversight process will be one of command-and-control. There will be a high level of oversight with review and approval of plans for each phase of corrective action and a detailed verification process. Facilities with limited technical abilities will also have a higher component of command-and-control but it will be focused on technical assistance/direction. Oversight will tend to be prescriptive rather than consultative.

For a willing facility whose personnel are technically competent and experienced (high ability and/or motivation), the Department's level of oversight will be proportional to complexity of the site:

> Low Complexity - review initial plan, verify corrective action goals achieved upon completion of corrective action;
>
> Moderate Complexity - review characterization plan and results; establish performance requirements for corrective action and give detailed review of performance monitoring plans; verify achievement of corrective action goals;
>
> High complexity - detailed review of each phase of corrective action and verification of results for each phase.

For a facility which lacks the necessary resources, whose personnel may not have all of the technical expertise or experience to adequately conduct the corrective action, or that the technical information gathered or proposed is lacking (moderate ability and/or motivation), the Department's technical staff will have an increased level of technical involvement. In these instances, the level of oversight will be as follows:

> Low Complexity - additional performance milestones may be set to monitor the progress of work at the facility; Department staff may oversee some activities more closely;
>
> Moderate Complexity - review each phase of characterization and the results; establish performance schedules for corrective action; detailed review and approval of performance monitoring plans; moderate level of field oversight of the work performed and of the verification of results;
>
> High Complexity - detailed review and approval of each phase of characterization and corrective action; may involve input in the development of characterization and corrective action plans, and significant field oversight of implementation.

For facilities whose personnel or agents lack technical competence or experience to adequately conduct the corrective action or that demonstrates an unwillingness to perform the necessary work (low ability and/or motivation), Department technical staff will have a significantly higher level of direct involvement in the corrective action process. The negative consequences of such an approach are: a) the Department will use a prescriptive approach in deciding what should be done at the facility, b) increased Department involvement results in higher document review and activity fees being assessed, c) failure to do what is required may result in the facility being subject to an enforcement action, and/or d) the activities may

need to be structured under an order. Such a facility will receive the following level of oversight:

Low Complexity - Department staff may develop and direct the integrated corrective action with the facility providing financial and implementation support or the Department may encourage the facility to hire competent consultants to do work;

Moderate Complexity - review and approve each phase of the corrective action process; may involve significant input in development of characterization and corrective action plans; high level of field oversight of work performed and verification of results;

High Complexity - unlikely to be encountered or may require referral to EPA or other agency who can more readily compel completion of the corrective action.

Of the two primary factors considered when deciding level of oversight, a facility that has little influence over existing subsurface characteristics and the behavior of contaminants released into the environment prior to implementing a remedy. Therefore site-specific characteristics will largely determine which category (low, moderate, high) the facility falls under on the site complexity scale. On the other hand, the facility owner/operator does have the ability to influence where they fall on the ability/motivation scale. A demonstrated willingness to undertake the cleanup and apply the necessary resources to complete the work (monetary and use of capable personnel), will result in the Department playing more of a collaborative or consultative role requiring less direct technical involvement. Conversely, non-compliant behaviors or a demonstrated unwillingness to perform required work will necessitate increased Department involvement. Improvements in these behaviors are grounds for reconsidering and possibly modifying the Department's oversight role to one that is more collaborative or consultative. Facility representatives should carefully consider this fact when planning the corrective action program as it will have a significant impact on process time frames and the long-term cost of the cleanup.

3.1.3 Determination of Oversight Level

No "bright line" establishes a cutoff that indicates that sites above or below the line fall into a high, medium or low oversight category. The informal and subjective decision process on the manner in which oversight will proceed is made on a case by case basis after some or all of the thresholds and other considerations noted above are understood, and the need for a collaborative decision-making process that includes the regulators, the community, and the facility are evaluated.

The facility owner/operator and the Department should discuss, negotiate and collectively decide which category and level of oversight is appropriate for the site. It is recommended that the facility review the decision criteria listed in Tables 2 and 3, determine where it may fit in the variable oversight matrix of Table 1 and propose this selection to the Department either in one of the initial corrective action documents or during a meeting with Department personnel early in the cleanup process. The Department will perform a similar evaluation and either concur with the proposed selection or propose one of its own based on the available site data and its knowledge of the facility and the individuals performing the work. In the event the Department and the facility fail to reach a mutually acceptable agreement, the Department will make the final decision as to what constitutes an appropriate level of technical involvement and oversight.

It should be noted that the issue of variable oversight may be reconsidered at a number of points in the process of cleaning up a facility. For example, if one reason the facility was not considered to be eligible was the lack of a trust relationship and/or the lack of experience, the issue of variable oversight could be re-evaluated if and when this changes. Conversely, if decisions are made to utilize a particular level oversight and they are not justified by subsequent events, the Department will reconsider what it believes

to be an appropriate level of oversight in the light of these events.

One of the primary considerations in deciding the level of oversight is whether the regulators and the facility believe that they have or can develop a constructive, collaborative working relationship and that they trust the integrity, management, and experience of the individuals involved. Although the facility owner/operator's actual track record is a consideration, it may play a much larger, but somewhat hidden, role due to its influence on the regulators' perception of the working relationship (i.e., trust) with the facility and on the community's perception of the progress being made at the facility and, therefore, on their willingness to allow a reduced level of oversight. Some important components of this trust relationship may include technical expertise of the people performing the work, willingness to allocate the necessary resources to address the problem, willingness to proactively deal with the situation, willingness to minimize delays, open and frequent communication, the compliance history of the facility, and mutual respect. A demonstrated ability to achieve and maintain a positive trust relationship is cause for the Department reducing its level of oversight.

3.1.4 Other Factors that may Influence the Level of Oversight

In deciding the level of oversight that may be appropriate for a site, there may be other factors that must be taken into consideration that have the potential to influence or even far outweigh the two primary factors (complexity and ability/motivation) discussed in the previous section. Each of these factors has the potential of increasing the Department's level of involvement above and beyond what might be expected if one were to rely solely on the variable oversight process outlined in Table 1. This stepped-up level of involvement and oversight may range from the need for more frequent communication between the Department and facility representatives and the preparation and review of informal work plans, all the way to the need for the preparation, review and approval of detailed work plans for each phase of the investigation. Each of these factors is described in the paragraphs below.

Public Involvement - As was discussed in Section 2.6, the Department has a responsibility to keep the public informed of activities occurring at sites undergoing cleanup in their community and to solicit their input on actions that may affect them. This responsibility may range from keeping accurate and up-to-date records of the cleanup process, all the way to holding public meetings to describe in detail the activities occurring at the site. There may be instances when the public's desire to monitor activities at the site will result in the Department increasing its technical involvement and oversight at the facility undergoing cleanup. An elevated level of involvement will in most cases be necessary when the community around the facility may either be a) directly impacted by the release and ensuing cleanup activities and/or b) the community, including the news media and elected officials, express a heightened interest in the cleanup. This increased level of scrutiny may be necessary to reassure the public that the contamination does not pose a threat to their health, that their property and financial interests are not at risk, that the work is being conducted in a proper manner, and that it is being completed in a timely fashion.

Actions by/with Other Agencies - There may be instances when the Department may oversee the cleanup of a site in conjunction with another government agency that has similar if not equal authority to direct the cleanup process. Examples may include joint actions with other State, Federal or local governmental agencies with an interest or authority to oversee environmental cleanups, or have a responsibility to issue permits necessary for the cleanup of a site (e.g., Environmental Protection Agency (EPA), Department of Labor and Employment's Division of Oil and Public Safety, Water Quality Control Division, Department of Natural Resources, Corp of Engineers or local health departments). These other agencies may have procedures or interests of their own that dictate the need for an increased level of involvement at the facility undergoing cleanup.

As was discussed at the beginning of this guidance document, EPA authorized the State of Colorado's to implement the federal RCRA programs. With the exception of a small number of facilities, the Department will have the sole responsibility to oversee the cleanup of sites where releases have occurred. The EPA may be a participant in the cleanup process at a handful of sites where it may have equal authority established under a joint order or where it may exercise independent authority to become involved in the cleanup process, either directing the activities or coordinating their actions with the Department. Other circumstances which might prompt EPA involvement at a site undergoing cleanup include:

- In addition to any State authority, EPA has independent authority to require a facility to investigate and/or remediate releases to the environment. EPA has a wider range of statutory authorities for use where appropriate, for which there may be no State equivalents. Five examples of these EPA authorities include:

  – Section 3013 - requires monitoring, testing, analysis and reporting of information for facilities that may present a substantial hazard to human health or the environment. This authority may be employed in cases where the State has limited to no authority to independently initiate investigations where contamination may be present and testing is warranted.

  – Section 7003 – requires cleanup of situations that may present an imminent and substantial endangerment to human health and the environment.

  – Comprehensive Environmental Response, Compensation, and Liability Act (CERCLA) - Under CERCLA EPA has independent authority to either require responsible parties to characterize and remediate releases to the environment or conduct such activities itself and recover its costs from the responsible parties. CERCLA may operate in conjunction with, or independent of, any RCRA related activities that may be underway at the site. This law has authority to deal with releases of hazardous substances, which is a broader list of chemicals than hazardous waste. It is especially useful at facilities that are bankrupt, abandoned, or not economically viable. It is often used in conjunction with RCRA for cleanup at large Federal facilities that are on the National Priorities List.

  – Toxic Substances Control Act (TSCA) - Under TSCA EPA has authority to deal with releases of PCBs, asbestos, and other chemical substances. This law also contains authority to issue subpoenas to individuals to answer questions under oath. This authority may be used in certain circumstances to question individuals and/or require the submittal of documents concerning releases of hazardous wastes and other toxic substances to the environment.

  – Oil Pollution Act - Under this law EPA has authority to deal with oil spills that may reach waters of the United States.

- The Department may choose to invite EPA participation in situations where a site, or a portion thereof, may pose an imminent and substantial endangerment to human health and the environment and immediate action is required to characterize or lessen the potential threat. These requests for assistance from EPA's Emergency Response, Preparedness and Assessment Program are generally for cases where the facility may have been abandoned, leaving behind waste or known contamination.

- The Department may request technical assistance from EPA in a number of specialized areas including technical specialties, ability-to-pay analyses, and criminal investigation. This assistance may involve EPA staff or EPA contractors.

- The Department may choose to invite EPA participation in cases when it believes the use of alternate authorities (noted above) may provide an advantage in characterizing and/or cleaning up a site. An example might be to compel a recalcitrant facility to perform an activity for which EPA has a more clearly defined authority to issue requirements.

- EPA may choose to initiate corrective action at sites where either it has independently identified a release or where it believes the State has failed to take necessary action.

Similar to when other agencies are involved, EPA's involvement in the cleanup of the site could potentially increase the level of oversight beyond what may otherwise be required by the Department.

Use of Innovative Technologies - There are certain risks associated with the use of innovative technologies to either characterize and/or remediate contamination sites, particularly if the technology employed is unproven or has a limited record of success. Although we encourage facilities to utilize new methods and technologies to more effectively and efficiently achieve a desired outcome, there may be a need for increased involvement and oversight to educate Department staff and demonstrate the reliability of the proposed method, thereby gaining their confidence that it will be as dependable and protective as proven methods and technologies. This becomes even more important when the use of these alternatives will determine the facility's compliance with established performance standards or regulatory requirements, or when resources are limited and failure could adversely impact the future course of the cleanup. The Department's close involvement in these uncertain situations will allow the facility to also benefit from the collective experience and knowledge, thereby providing it with additional information to base decisions on (whether or not to proceed with its implementation or when to decide to return to a proven method). Depending upon the circumstances, the need for our stepped-up involvement may be limited to the design and application of this new method or technology, after which the level of oversight resumes its normal level once it is demonstrated to be effective.

The Department will decide on a case-by-case basis whether increased oversight is necessary when innovative technologies are employed during the cleanup process. It is conceivable that the Department's involvement may remain unchanged if background documents supporting the use of the innovative technology are included with the work proposal, thereby lending confidence that it will work, or if a contingency plan is offered in the event the technology fails.

3.1.5 Use of Professional Judgment in Deciding Level of Oversight in the Absence of Data

There may be instances where insufficient information is available to evaluate the factors listed in Table 2 and, to a lesser extent, Table 3 when deciding the appropriate level of oversight. For example, information may be available showing that there has been a release, but nothing is known regarding its extent or magnitude, whether it is confined to the property or not, if someone may be exposed to unacceptable concentrations, etc. In these cases the Department will use its best professional judgment in deciding the level of oversight. Items the Department will consider include, but are not limited to, the following:

- historical activities at the site;
- knowledge of waste generation and management practices at the site;
- knowledge of surrounding land use;
- knowledge of whether there are any water wells in the area, or the potential for them to be present;
- previous experience at similar types of releases or sites;

- potential for harm based on the mobility and toxicity of the contaminants that have been identified at the site;
- judgment on the extent and magnitude of contamination based on existing sampling data coupled with known activities at the site;
- knowledge of either the facility or their consultant having satisfactorily dealt with similar situations in the past;
- knowledge of available resources to be applied to the cleanup;
- an expressed willingness and demonstrated ability to respond to the problem.

In those cases where characterization data are lacking, it is incumbent upon the facility representatives to collect this background information on the site and make it available to the Department for purposes of making this decision. Doing so may ensure that the chosen level of oversight is not set too high, thereby resulting in the unnecessary expenditure of resources by both the facility and the Department.

As was discussed previously, the level of oversight may be adjusted during the corrective action process depending upon a) new data that may become available following implementation of the cleanup program and b) the performance of the facility owner/operator, or their consultants, completing the work.

3.2 Document Review And Approval

Assuming that a facility does not require a high level of oversight, the Department's desire is to limit its involvement to a) establishing performance goals and timeframes, b) reviewing and approving key documents that may be prepared during the life of the corrective action program and c) verifying that cleanup is complete. In these cases, the expectation is that the facility responsible for implementing corrective action at its site will do so in a manner of its choice, assuming that professionally accepted methods are used and the Department's expectations are satisfied, as outlined in this guidance document. Unless deemed necessary, the Department's preference is to not become involved in every aspect of the site cleanup; it has neither the time nor resources to do so at every site that is subject to its jurisdiction; it slows down the investigation and cleanup and it can be costly for the facility performing the work. Nor is it always necessary to provide extensive documentation where its value in achieving the goal is not evident.

The Department's desire is to limit its involvement to the review and approval of milestones in the corrective action process. Key documents that must, at a minimum, be submitted for review and approval are listed in Table 4 and have already been noted in the discussion above on the range of oversight options based on site complexity and the facility owner/operator's ability and motivation to perform the necessary work. Besides those documents, the Department also expects the facility to provide it with the following:

- initial notification of a release along with a statement describing what will be done in response to this discovery;
- notification of any interim measures that may need to be implemented to quickly respond to an imminent threat or hazard;
- notification of any activities it believes may attract the attention of surrounding property owners or businesses, the public, or local government agencies. This notification is requested so that the Department may be adequately prepared to respond to inquiries from these entities.

The corrective action process chosen has a significant impact on the number of interim deliverables that may be generated. The traditional method is to use a phased approach to characterize and remediate sites: the results of one phase determines the activities that will be performed in the subsequent phase, with the generation of work plans and reports during each phase. The benefits of this approach are that data gaps

are filled in a sequential manner, the facility's resources are prudently applied to the collection of these data and there is comfort knowing that the Department is in agreement with the work being done. The downside of such an approach is that it slows down the corrective action process and is resource intensive. Although site-specific considerations may suggest that low-level oversight is appropriate, the facility always has the option of requesting greater Department involvement if there is good cause for doing so.

The preferred alternative to this approach is to implement the corrective action process in a phased but integrated and iterative manner. Rather than have the Department review and approve every work plan that may be generated, it is more desirable to prepare a single plan that outlines the goals of the work to be performed, identifies the methods to be used and provides a decision tree that will be used to guide the work through its completion. For example, a work plan may propose an initial set of sample locations, with subsequent samples being collected from new locations, if necessary, based on criteria and a decision flowchart contained within that same work plan. This process eliminates the need for preparing interim reports and work plans since the critical decision-making process may have already been approved and all data will be presented in a comprehensive report prepared at the conclusion of the corrective action event.

The Department will review all documents received and either approve them, approve them with modifications or disapprove them. The Department will provide a written explanation for any disapproval or approval with modifications of a plan or report submitted. Directions will also be provided as to how the disapproval or approval with modifications should be responded to. Typically, the facility owner/operator has the choice of the following options upon receipt of a disapproval or approval with modifications:

- within fifteen (15) calendar days submit a notice of acceptance of the plan or report as modified, and implement the plan in accordance with the established schedule;

- within ten (10) calendar days submit a notice of objection to the disapproval or approval with modifications. The notice of objection should respond to each issue raised in the Department's written explanation of the disapproval or approval with modifications; or

- within thirty (30) calendar days submit a revised plan or report for Department review and approval. The notice of objection should respond to each issue raised in the Department's written explanation of the disapproval or approval with modifications.

In the event a disagreement arises, every effort should be made to informally resolve the dispute in an expeditious fashion. If the parties fail to reach an agreement through this dispute resolution process, the Department's decision will be deemed a final determination that is subject to appeal in accordance with the Colorado Hazardous Waste Act. The owner/operators responsiveness to comments, proposed modifications and resubmission of acceptable documents, if deemed necessary, is a factor used to determine the level of oversight on an on going basis.

3.3 Field Oversight

An important element of the Department's role in the corrective action process is to conduct field oversight inspections. The primary purpose and benefits of these visits include:

- visit the site to get a feel for its size, location, proximity to other geographic features, surrounding land use, etc., all of which contribute to the staff person's understanding of site-specific characteristics that may influence the direction of the corrective action program;

- observe the implementation of approved sampling plans and verify that the work is being conducted in accordance with specified procedures;
- observe the implementation of approved remediation plans, including operation and maintenance plans, to ensure that remediation systems are constructed and operated in a fashion that will maximize its performance;
- document the completion of remedial activities prior to terminating the corrective action process and the Department's involvement with the site;
- information may be exchanged in an informal manner (alternative mode of communication);
- decisions can be made more quickly, perhaps even in the field, by discussing problems that may be encountered while implementing plans, thereby reducing or avoiding the need to rely on the less efficient forms of communication to modify procedures;
- the Department staff person becomes familiar with activities at the site, thereby allowing them to more quickly review documents received from the facility;
- these contacts may help establish a good working relationship between the Department and facility representatives;
- the Department gains confidence that the work is being performed in an acceptable manner, thereby building that "trust relationship."

As was discussed previously, the level of field oversight will vary based on the complexity of the site and the ability and/or motivation of the facility performing the work. The Department's field presence may range from simply confirming the completion of remedial activities, all the way to overseeing the implementation of every corrective action plan that may be prepared for the site. See Table 1 to get a sense of what level may be deemed appropriate for your site.

3.4 Corrective Action Oversight Mechanisms

A number of corrective action mechanisms are available which may incorporate varying degrees of flexibility. These mechanisms are discussed in more detail in the paragraphs below.

Corrective Action Plan under Section 100.26 - Facilities may voluntarily request to cleanup their sites using either an integrated or phased Corrective Action Plan which is prepared and approved by the Department in accordance with Section 100.26 of the Colorado Hazardous Waste Regulations. Only facilities subject to corrective action requirements under a permit are excluded from utilizing this process. This rule outlines a simple process whereby a facility subject to the hazardous waste regulations may initiate the corrective action process without seeking a permit or order. The Corrective Action Plan rule is designed to a) allow facilities to quickly initiate the corrective action process that may be more time efficient and less costly, and b) avoid the stigma of an enforcement order, yet provide an enforceable oversight mechanism for RCRA cleanup actions. The facility that wishes to cleanup their site under this rule has the option of doing so using either the traditional phased approach or in an integrated fashion. In the first instance, the corrective action plan would outline a phased process whereby the results of the previous activities would be used to determine the subsequent activities, each step of which may involve the generation of reports and/or work plans for Department review. In the second instance, the Corrective Action Plan would be a comprehensive site characterization report and cleanup proposal combined into a single document. Such a plan would include all information asked for in the Department's "RCRA Integrated Corrective Action Plan Guidance Document and Checklist" (January 2000, or most recent update). Regardless of whether a phased or integrated approach is used, the Department is required to quickly review and evaluate the technical information provided and expedite a decision on the proposed plan. Upon receipt, the Department has time frames within which to review and respond to the actions proposed in the plan. Please refer to both the rule and guidance document/checklist for more details as to what should be included in such plans.

Operating Permit - Facilities seeking a new permit to treat, store or dispose of hazardous waste must first obtain an operating permit from the Department in accordance with the procedures outlined in Part 100 of the Colorado Hazardous Waste Regulations. Among other information requirements, both the application and permit issued by the Department would include a) procedures for monitoring and responding to releases to ground water, b) procedures for implementing the corrective action process at solid waste management units and c) a plan to close the regulated unit within 180 days after receiving the final volume of hazardous waste.

Post-Closure Permits or Post-Closure Order - A post-closure permit, or an equivalent mechanism such as a post-closure order, would be required for either a permitted or interim status facility upon determining that all hazardous waste or hazardous constituents will not be removed from either the closing regulated unit or the surrounding environmental media.

Compliance Order on Consent - A compliance order on consent may be required in cases where a) the corrective action process is expected to require long-term commitments, b) the proposed cleanup activities necessitate the use of units requiring an order mechanism (e.g., Corrective Action Management Unit, Temporary Unit, or Staging Pile), or c) the proposed remedial activity requires the use of enforceable institutional controls. These orders outline the required corrective action process. The facility and Department representatives would negotiate and agree upon the terms of the corrective action elements of the order before it is signed. Specific details of the site investigation and cleanup would be proposed in work plans prepared by the facility and approved by the Department.

Unilateral Compliance Order – In addition to the reasons noted above for a compliance order on consent, a unilateral compliance order may be required in cases where a) serious violations of the regulations have been identified by the Department or b) the facility may have demonstrated an unwillingness to perform the necessary corrective actions in response to a release. As the name implies, the Department prepares and issues this legal document with minimal to no input from the receiving facility. Unilateral compliance orders outline the required corrective action process. Specific details of the site investigation and cleanup would be proposed in work plans prepared by the facility and approved by the Department.

The mechanism selected will be dictated by site-specific circumstances and include factors other than the need for conducting corrective action. For example, the presence of regulated units at a facility may require that the corrective action be performed under an operating permit, post-closure permit or post-closure order. Or the compliance history indicates that the preferred mechanism should be a unilateral order. The facility may propose a mechanism under which it will perform the work, however, the final decision to accept that proposal or select an alternate mechanism rests with the Department.

In conclusion, all RCRA corrective actions must be performed under one of the mechanisms noted above. Not only do they provide a structured, yet flexible process for completing cleanup activities, they also ensures that a process is available to resolve any disputes that may arise during the course of the corrective action process, and they ensure that the Department is reimbursed for the time it spends reviewing and approving documents the facility may prepare. The facility benefits by having a defined process that may aid in planning, budgeting resources, may be useful for insurance purposes and informing management of long-term commitments. The Department will spend a limited amount of time working with the facility in preparation for entering into one of the mechanisms noted above. There are very few circumstances under which the Department will become involved in a cleanup that does not involve one of these mechanisms. These situations primarily include emergency situations that require prompt attention in order to protect human health and the environment. Even in these situations, once the time critical event has passed, any follow-up activities will be performed under one of these mechanisms.

3.5 Alternative Modes Of Communication

The traditional approach of communicating between the regulated community and regulator has been to exchange numerous documents, including work plans, reports and letters. The problem with this approach is that it is time consuming, resource intensive, slows down the cleanup and does not allow for the interactive discussion of issues of importance leading to agreement. New and different methods of communicating are necessary if there is to be any hope of streamlining the corrective action process.

The theme of the new oversight process is twofold: first -- early and frequent communication that is issue-oriented rather than document-oriented; and second -- reaching a series of early agreements on approach to studies and analyses that can ensure that, when documents are produced, the results are more likely to be accepted, and the continuing debate is on decisions, not methodology or data adequacy.

Open and productive communication between the facility, the Department and when necessary, the public, is the means through which information is shared, solutions are built, and buy-in to a corrective action result is achieved. By focusing on substantive and technical issues, our ability to achieve results more easily, effectively, and quickly improves. It also prevents late “surprises” that prolong a corrective action and cause stress. Open and productive communication can help the Department, facility and public build trust and positive relationships that in turn result in higher quality decisions.

To ensure that issues of importance are not obscured by the exchange of written documents, it is advised that facility and Department representatives meet periodically to discuss key issues that will govern the course of the corrective action process. Such communication should commence early and continue throughout the process. Subjects of discussion may include:

- the choice of mechanisms through which the cleanup may proceed;
- review of data to decide the next step in the process;
- establishing performance goals and cleanup standards;
- what constitutes an adequate performance monitoring program;
- problems encountered that may require the modification of approved plans; etc.

Alternative modes of communication--including informal meetings, periodic interactive briefings, telephone conference calls, brief tables, or memoranda--may provide sufficient information on these and other key issues in a timely manner to allow the site to proceed to cleanup more rapidly than through traditional approaches, while assuring the Department and the community that the site cleanup is proceeding in a manner consistent with statutory and regulatory requirements and is protective of human health and the environment. The existence of a positive working partnership is essential to provide the foundation for use of these alternative means of communication. Another benefit of increased communication is that when documents are exchanged, the need for preparing and reviewing multiple drafts may be eliminated due to the enhanced ability to get it “right” the first time.

The use of alternative modes of communication assumes that the Department is acting in a collaborative or consultative role. This will not be the case if the Department must work with a recalcitrant facility or if issues of non-compliance arise. In these instances a more formal and traditional approach to communication must be relied upon (written correspondence) in order to document requirements, agreements or instances of non-compliance for possible enforcement action. Once again, the behavioral approach the facility takes with regard to the cleanup process and the Department will have a major influence on the speed and efficiency with which work is completed.

Table 1 Corrective Action Variable Oversight Process

Department's Role in the Corrective Action Process	Site Complexity Increasing CDPHE Involvement Increasing			Level of Ability and/or Motivation	
	Low Complexity	**Moderate Complexity**	**High Complexity**		
Technical Involvement	Review and Verify	Review phases, establish performance standards, detailed review of monitoring, verify results	Review and approve each phase of corrective action and verification of performance	**High Ability and/or Motivation**	**Decreasing Ability or Motivation to do the Work** **CDPHE Involvement Increasing**
Oversight	Low level, mainly review	Collaborative or consultative	Moderate level of involvement in a consultative or collaborative role		
Technical Involvement	Review, Approve, Verify	Review and approve each phase of corrective action, involvement with plan development	Review and approve each phase of corrective action, direct involvement in plan development	**Moderate Ability and/or Motivation**	
Oversight	Moderate oversight with field verification	Moderate oversight with occasional field oversight of all phases	Moderate oversight with high level of field oversight of all phases		
Technical Involvement	Detailed Review, Approve, Verify	Review and approve each phase of corrective action, direct involvement in plan development, prescriptive	Review and approve each phase of corrective action, direct involvement in plan development, prescriptive	**Low Ability and/or Motivation**	
Oversight	Command-and-control with field oversight	Command-and-control with high level of field oversight	Command-and-control with high level of field oversight		

Table 2 Technical Characteristics That Influence Site Complexity

	Site Complexity Increasing **CDPHE Involvement Increasing**		
Influencing Factors	**Low Complexity**	**Moderate Complexity**	**High Complexity**
Hydrogeology and Extent of Contamination	• Simple hydrogeology that can be easily characterized • The contaminants of concern are relatively immobile and few in number • Low level contamination in soil • Limited or no ground water contamination • Contamination has not migrated off-site • The prospect of contamination moving off-site in the future is low to nonexistent • A relatively small area has been impacted	• The site hydrogeology is sufficiently complex to make it more difficult to characterize and predict the movement of contamination through the subsurface • The contaminants of concern are relatively mobile and few in number • A relatively large area or several areas have been impacted • Contamination is either confined to the subject property or has migrated a short distance off-site with little potential to migrate farther in the future • Moderate to high level contamination in soil (concentrations that pose a risk to those that may be exposed, including on-site workers, has a potential to degrade water quality, and/or exhibit the characteristic of a hazardous waste) and ground water (10 to 100 times MCLs on-site, no more than 10 times MCLs off-site) • Significant off-site contamination exists	• The site hydrogeology is complex, making it difficult to characterize migration pathways and predict its movement through the subsurface • Numerous contaminants of concern are present, some of which are very mobile • Free phase contamination is present in the subsurface • Contaminated ground water interacting with surface water • Significant off-site contamination exists • Several large areas have been impacted • High level contamination in soil, at concentrations that are 10 times values that a) pose a risk to those that may be exposed, b) have a potential to degrade water quality, and/or c) exhibit the characteristic of a hazardous waste • Ground water is heavily contaminated (greater than 100 times the MCL on-site, greater than 10 times the MCL off-site) and has migrated well beyond the boundaries of the facility and its full extent is unknown

Table 2 (Continued) Technical Characteristics That Influence Site Complexity

	Site Complexity Increasing **CDPHE Involvement Increasing**		
Influencing Factors	**Low Complexity**	**Moderate Complexity**	**High Complexity**
Contaminant Toxicity and Risk	• The contaminants of concern have low toxicities and present minimal cancer risks • No potential for exposure to contamination at levels that would pose a threat	• The toxicity of the contaminants would be a concern if exposures were to occur • The potential for exposure to contamination exists • Little to no risk to human health and the environment, both currently and into the foreseeable future	• The toxicity of the contaminants is high • Water supply wells may be threatened or are already impacted • High potential for or known exposure to contamination at levels that would/do pose a threat under existing exposure scenario
Ease of Remediation	• If necessary, the release can be easily remediated using proven methods • If time is needed to complete the cleanup, the contamination will be under control and nothing more is required beyond routine operation and maintenance activities	• Cleanup will be required but the anticipated residual risk after cleanup is low • The release can be remediated using standard technologies that have been demonstrated to be effective elsewhere • A moderate amount of time will be required to fully remediate the release, with cleanup (operation and maintenance activities) being adequately managed in the interim	• Cleanup will be required and it will be substantial • The outcome of using standard technologies is uncertain • The release will be remediated using innovative technologies, the outcome of which is uncertain • The selected remedy will require many years to implement, will require a substantial amount of monitoring to evaluate its performance and/or waste is expected to remain behind at its conclusion
Community Involvement	• No community interest with regard to the corrective action process at the facility	• Little community interest with regard to the corrective action process underway at the facility, limited primarily to an infrequent inquiry from the news media or citizens	• High level of public interest with regard to the corrective action process underway at the facility, including frequent contacts with the news media and citizen groups

Table 3 Resource And Behavioral Characteristics That Influence Level Of Oversight

	Willingness and Ability Decreasing **CDPHE Involvement Increasing**		
Influencing Factors	**High Ability and/or Motivation**	**Moderate Ability and/or Motivation**	**Low Ability and/or Motivation**
Willingness and Resource Availability	• The responsible party is willing to perform the necessary work • The responsible party voluntarily and promptly informed the Department of the release • The financial and human resources to complete the necessary work are readily available	• The responsible party, for a variety of reasons (financial or public perception), is reluctant to proceed with necessary work • Resources are limited and Department involvement is called for to guide the process and minimize the unnecessary expenditure of those resources	• The responsible party is unwilling to perform the necessary work without being directed to do so • The responsible party either does not have or is unwilling to devote the necessary resources to complete the work • The facility has demonstrated an unwillingness to implement work plans as approved, possibly resulting in project delays and/or violations of work requirements • The pace of progress is unacceptably slow
Technical Expertise	• The performance of the facility, and/or their agents, is consistent, predictable and has been demonstrated to meet Department standards of quality and performance • The facility, and/or their agents, consistently produces technically sound documents, performs acceptably in lab or field audits, agrees to a reasonable time frame for finishing site work and follows through on verbal and written commitments • The Department will recognize and take into account a turn-around in the behavior and willingness of the facility, and/or their agents, to complete remediation	• The performance of the facility, and/or their agents, has not always been consistent, predictable or met Department standards of quality and performance • The facility, and/or their agents, do not consistently produce technically sound documents, may not perform acceptably in lab or field audits, may require considerably more time than what is normally expected to complete site work and/or do not always follow through on verbal and written commitments • Insufficient information is available to evaluate the performance of the facility, and/or their agents to determine whether it is consistent, predictable and will meet Department standards	• The facility, and/or their agents, do not have the technical competency or experience to consistently and reliably perform the necessary corrective action and meet Department standards of quality and performance • The Department is required to expend a great deal of time and effort negotiating each element of the corrective action process with the facility, and/or their agents, either as a result of an unwillingness to perform the work or lack of technical expertise
Compliance History	• There are no outstanding compliance issues	• The facility may have outstanding compliance issues or there is a potential for compliance with Department requirements to become a concern at a later date	• The potential for noncompliance with Department requirements is high or has been demonstrated based on past performance

Table 4 Documents Subject To Review And Approval By The Department

Decreasing Ability or Motivation to do the Work **CDPHE Involvement Increasing**		**Site Complexity Increasing** **CDPHE Involvement Increasing**		
		Low Complexity	**Moderate Complexity**	**High Complexity**
	High Ability and/or Motivation	• Integrated corrective action plan • Completion report	• Integrated site characterization work plan • Site characterization summary report • Corrective measures work plan • Performance evaluation report(s) • Completion report	• Choice of either an integrated or multi-phase site characterization work plan(s) • Site characterization summary report • Corrective measures study report • Corrective measures work plan • Periodic performance evaluation and monitoring report(s) • Completion report
	Moderate Ability and/or Motivation	• Choice of either an integrated or multi-phase site characterization work plan(s) • Corrective measures work plan • Completion report	• Choice of either an integrated or multi-phase site characterization work plan(s) • Site characterization summary report • Corrective measures work plan • Periodic performance evaluation and monitoring report(s) • Completion report	• Work plans for each phase of the site investigation effort • Site characterization summary report • Corrective measures study report • Corrective measures work plan • Periodic performance evaluation and monitoring report(s) • Completion report All of the above may be required for each affected media and for each contamination site
	Low Ability and/or Motivation	• Choice of either an integrated or multi-phase site characterization work plan(s) • Site characterization summary report • Corrective measures work plan • Periodic performance evaluation and monitoring report(s) • Completion report	• Work plans for each phase of the site investigation effort • Site characterization summary report • Corrective measures study report • Corrective measures work plan • Periodic performance evaluation and monitoring report(s) • Completion report All of the above may be required for each affected media and for each contamination site	• Work plans for each phase of the site investigation effort • Site characterization summary report • Corrective measure study work plan • Corrective measures study report • Corrective measures work plan • Periodic performance evaluation and monitoring report(s) • Completion report All of the above may be required for each affected media and for each contamination site

4.0 THE SITE CHARACTERIZATION INVESTIGATION

The primary purposes of the site characterization investigation are to:

- identify all known or suspected sources that presently are or have in the past released unacceptable levels of contamination into the environment;
- to define the full vertical and horizontal extent of contamination in all affected environmental media (air, surface water, ground water, and soil) down to concentrations that are determined to be protective of human health and the environment, and;
- to define those pertinent hydrologic and geologic characteristics of the site to allow one to predict the behavior of the contamination and affected media, and to understand how these physical site characteristics may influence the choice of a cleanup remedy, if deemed necessary.

During this investigation, all potential exposure pathways should be identified and data collected to fully characterize the impact of contamination. A site conceptual model should be developed for the purpose of guiding the collection of sampling data and eventually for the purpose of evaluating potential cleanup remedies. Data should also be collected to support the evaluation and selection of preferred remedial alternatives. All this information is then used to determine whether remediation is necessary, and if so, to select and design the remedy. An effective remediation plan or request for no further action can't be developed or approved without this site characterization data.

The degree to which a facility is characterized will vary according to site-specific circumstances. A facility, with a clearly defined release point, may choose to limit its characterization and remedial activities to that area where contamination is known to exist. For example, an aboveground tank ruptures and spills its contents onto the adjacent ground. In this case the site characterization is confined to this specific release and there would be no need to investigate the remainder of the property. In other cases where little to no information is known regarding a suspected or observed release, the characterization effort may perhaps cover a larger area of the facility that encompasses several suspected release sites. For example, sampling shows that ground water contamination is derived from a particular facility, the exact source of which is unknown. Sampling could occur at several locations across the site in an effort to locate one or more contributing sources. If the facility is seeking an action for the entire property, the investigation should naturally cover the entire site. At the other end of the scale, treatment, storage or disposal facilities seeking an operating or post-closure permit/order are required by regulation to identify, characterize and, if necessary, remediate all on-site solid waste management units, regardless of whether or not they may in any way be associated with the regulated unit for which the permit is required.

In the end, the facility owner/operator must determine how large an area should be included in the site characterization effort. This determination will be evaluated and approved by the Department when it is asked to review documents prepared for the facility. The Department recommends that the facility owner/operator broaden the scope of the investigation to cover all known or suspected release points. Dealing with the facility in a comprehensive fashion may avoid the problems, added expenses or delays that may arise when it is determined that other sources are also contributing to the release of contaminants into the environment.

The facility investigation should be organized to carry out a series of often separate, yet integrated efforts that best fit the conditions of the facility and ensures that an adequate facility-wide investigation is completed. Data collection should proceed to a logical conclusion for each portion of the facility. It is critical that data collection to be focused on those factors that present, or have the potential to present, a risk. Risk management decision-making needs should be the primary driver for all data collection. Therefore, only data that support the corrective action decision process should be collected.

4.1 Source Identification

It is important to tie site characterization into the historical information gathered on the site to ensure that assessment efforts look for potential contaminants in the places they are likely to be. This historical review of activities should be conducted early in the corrective action process so that a comprehensive sampling and analysis plan may be developed utilizing this knowledge in order to evaluate potential sources of contamination at the site and to ensure that appropriate analytical methods are selected. Areas of particular concern generally include waste storage areas, above and below ground storage tanks, and process lines. All documented releases or spills should also be evaluated during this review. The site characterization investigation should identify any materials and operations at the facility that, if not properly controlled or maintained, could have caused or did result in a release of hazardous waste or hazardous constituents. It is often useful to compile a list of all hazardous substances used in the facility and the waste streams generated, both in the past and the present, at the facility. Checklist II in Appendix 1 should assist the owner/operator in determining what information may be necessary to evaluate all potential sources of contamination at the facility.

This type of information can be gathered from a number of sources including:

- determining the type of business conducted at the facility, such as an automotive repair or chrome plating shop, and researching what chemicals are or were commonly used at such a facility;
- reviewing the facility's hazardous waste shipping manifests;
- reviewing purchase orders for raw goods or products used by the facility;
- reviewing billing invoices for services the facility received;
- reviewing production and maintenance logs from the facility;
- reviewing previous site or facility investigation reports;
- reviewing Federal, State and local files on the facility for notifications made to report spills or accidental releases, waste discharge permits or notices, site inspections, and business registration information;
- process knowledge obtained by conducting interviews with current and former employees on how the facility managed its wastes; and
- taking a site tour of the facility to note the site's condition, looking for clues like stained areas or stressed vegetation.

Where possible, the waste stream history should include actual or approximate dates when any releases occurred, which will help determine the size, type, and scope of further investigations and sampling needed.

4.2 Site Setting

The site setting describes not only the physical features of the site, but also identifies the nearby cultural and environmental populations that could potentially be impacted by a release from the facility. The level of detail required to evaluate the surface and subsurface characteristics is largely dependent on the nature of the contamination and whether or not it is mobile. Checklist III in Appendix 1 should assist the facility owner/operator in determining what information may be necessary to adequately describe site-specific characteristics and conditions.

4.2.1 Surface Characteristics

Surface characteristics include both natural and manmade structures on and adjacent to the site, nearby cultural populations, and all relevant flora and fauna populations. It is important to evaluate natural features and manmade structures, such as drainage systems, local topography, utilities, surface water bodies, easements and locations of buildings, because these features can influence the migration of

contaminants and restrict access to portions of the site during remedial efforts. Information regarding nearby cultural populations includes the types of residences and facilities adjacent to the facility (e.g., residential, commercial, industrial land use), local use of ground water wells, and the location and type of potentially sensitive sub-populations (e.g., children, the elderly, residents with specific medical conditions, pregnant women, etc). This information is important in evaluating potential risk scenarios including duration and magnitude of exposure to contaminants released from the facility. It is also important to identify nearby wildlife populations, natural habitats, wetlands, recreational areas, and any other sensitive natural environments that could also be affected by a release. Surface site characteristic information can often be presented graphically on one or more site maps.

4.2.2 Subsurface Characteristics

Subsurface characteristics include the hydrologic and geologic properties of the ground beneath the facility and surrounding properties. This information is used in conjunction with other site setting information in evaluating contaminant migration pathways and in establishing potential exposure scenarios.

An evaluation of the hydrogeologic setting is based on the specific geologic formations and lithology affecting ground water flow beneath the facility and the characteristics of impacted aquifers. Information such as depth to ground water, thickness of the saturated interval(s), aerial extent of the aquifer(s), hydraulic conductivity of the aquifer(s), and an interpretation of the hydraulic interconnectivity between saturated zones is needed to evaluate the horizontal and vertical extent of contamination and help determine contaminant migration characteristics. Water level contour maps are useful in evaluating local ground water flow patterns, and should include data showing any seasonal variations in ground water flow direction. When applicable, the subsurface site characteristics should include information on any nearby ground water recharge/discharge areas and topographic features that might affect the ground water flow system. Descriptions of man-made influences such as french drains, unlined ponds, septic systems, NPDES outfalls, or ground water production wells that may affect the hydrogeology of the site should be included in this discussion. Any pertinent ground water quality information at or near the facility should also be incorporated.

Some of these data are readily available from existing site records, observations, or previous environmental assessment reports. Other data will have to be obtained through detailed site investigations and laboratory analyses of environmental media. Data gaps should be carefully considered when designing the field investigation program so that this information can be successfully acquired during the ensuing field investigation activities.

The amount of information that may need to be gathered will be dependent largely upon the characteristics of the release and the local hydrogeology. Relatively immobile contaminants that may have been released onto the ground surface will require considerably less subsurface data than a release involving a relatively mobile contaminant in a complex hydrogeologic setting and where the contaminants have migrated deep into the subsurface. The subsurface characteristics will need to be defined to the degree necessary to provide a clear understanding of potential migration pathways for the purpose of defining the extent of contamination and to evaluate potential exposure pathways.

4.3 Nature And Extent Of Contamination

One of the main objectives of the site characterization investigation is to determine what contaminants are present, where they are located, and at what concentrations. The list of hazardous substances used at the facility, knowledge of the waste streams generated, knowledge of the process flow, and spill or release incident documentation are all used together to identify potential contaminant source areas. Once potential source areas have been identified, then samples of all appropriate environmental media can be

obtained and analyzed for the contaminants of concern. During the site investigation, some potential source areas may be found to be uncontaminated, while contamination may be confirmed at others. Checklist V in Appendix 1 should assist the owner/operator in determining what information may be necessary to evaluate the location of contaminants present at the facility.

Once contamination has been identified and a determination is made that further characterization is necessary, the extent and degree of contamination must be determined for each constituent of concern at each source area. The goal is to develop a multi-dimensional understanding of all releases, including:

- the aerial distribution of contaminants in soil, water, and air;
- how contaminant concentrations vary with distance from the source and depth beneath the source;
- the transport mechanisms and the pathways contamination will follow;
- whether the contamination will migrate and how its distribution may change with the passage of time;
- whether the release is impacting nearby human and ecological populations, and;
- how all of the factors noted above will influence the selection and design of a preferred remedial alternative.

At this early stage of the corrective action process, data should also be collected for the purpose of evaluating viable remedial alternatives. Oftentimes the nature of the contamination and past experience dealing with similar situations elsewhere might point to one or more potential remedies (presumptive remedies). Instead of waiting for the completion of the field characterization effort, the facility owner/operator will benefit from collecting additional data during the investigation phase that can be used for the purpose of evaluating and possibly selecting one or more remedies that might be applied to the site. Doing so early in the process has the potential to save considerable time (shaving months, possibly years off the cleanup process) and money (eliminating the need for multiple sampling efforts). A few examples include:

- conducting pumping tests to evaluate aquifer characteristics and determine there influence on pump-and-treat or other in-situ treatment technologies;
- characterizing soil properties to evaluate the possible use of soil vapor or other infiltration treatment technologies;
- characterizing the basic geochemical characteristics of the formation to evaluate the behavior and ability of injected chemicals to treat contamination;
- characterizing microbiological populations or collecting general water quality data to evaluate the possibility of using enhanced monitored natural attenuation.

4.3.1 Determination Of Extent Of Contamination

A sufficient number of representative samples must be collected and analyzed to adequately determine the horizontal and vertical extent of contamination in all affected environmental media. The Department does not generally require a specific number of samples, but rather leaves that determination up to the judgment of the environmental professionals conducting the assessment. The site sampling and analysis plan should explain the rationale behind each sample location as well as justification for eliminating assessment of any suspected source areas.

Numerous guidance documents are currently available which describe the techniques and equipment that may be used to conduct a site characterization program. A representative collection of these documents may be found in the attached list of references. These sampling guidance documents are continually being revised or replaced as new methods are developed, so the reader is advised to consult the most current guidance documents available to identify, evaluate, and select the best available site characterization methods and equipment. Our preference is that proven and professionally accepted

techniques be used (ASTM or EPA approved methods) so that the acceptability of the data will not be questioned. If alternate sampling techniques are better suited for site-specific circumstances, it is strongly recommended that Department approval for their use be obtained prior to conducting the field investigation. Sampling methods employed should be described in sufficient detail in all work plans or reports prepared for the site so that the quality of the data may be evaluated. For sites being characterized using a phased approach, the alternative is to seek approval for a standard set of sampling procedures that will be employed throughout the characterization effort.

The extent of contamination in soil is defined when one of the following conditions is met:

- representative soil samples are shown to have no contaminant levels exceeding background levels. When it is appropriate to demonstrate background levels in soil, the Department recommends that a sufficient number of soil samples be collected to perform a statistically valid analysis of the data. The Department prefers that 9 samples be collected at appropriate locations and depths to evaluate background concentrations. This is generally considered the minimum number of samples required to determine whether the data are normally or log normally distributed. If less than 9 samples are collected (a minimum of 5 samples will generally be required) the data must be analyzed using non-parametric methods. More samples may be required where sites cover large areas with varying soil characteristics or where constituent concentrations vary significantly with depth.
- for each individual constituent, the contamination is defined down to a concentration that poses an excess cancer risk equal to or less than 1×10^{-6} and/or a Hazard Index of less than one using a residential exposure scenario (unrestricted use).
- for each individual constituent, the contamination is defined down to a concentration that poses an excess cancer risk equal to or less than 1×10^{-6} and/or a Hazard Index of less than one using a site-specific exposure scenario other than a residential land use (restricted use). This would be allowed only if a) soil contamination at and beyond the facility boundary does not exceed an unrestricted use concentration (point 2 above), b) there is little to no possibility that the soil contamination will in the future migrate off-site at concentrations in excess of unrestricted use concentrations, and c) a site-wide, enforceable institutional mechanism is available and put in place for as long as necessary to restrict activities to those used in calculating the site-specific soil concentration.

Extent of contamination in ground water is considered defined when contaminant levels are:

- at or below established State ground water standards (5 CCR 1002-41), or;
- at or below the drinking water maximum contaminant levels (MCL) for those constituents that do not have an established State ground water standard, or;
- at or below a risk-based concentration that is determined to be protective of human health and the environment for those constituents that do not have an established State ground water standard or MCL. The facility should seek the Department's approval to use a risk-based concentration before proceeding with the investigation.

and:

- at or below a concentration that is protective of surface water quality and ecological receptors (in those situations where ground water interacts with surface water), and;
- at or below a concentration that is protective of other potential exposure pathways (e.g., off-gassing of vapors and their collection in indoor air).

When evaluating ground water, at least one upgradient ground water sample should be collected to demonstrate background water quality. A sufficient number of monitoring points should be used to

convincingly define the downgradient extent of contamination. Many more monitoring points may be necessary, both horizontally and vertically, depending upon site specific conditions. Some situations where more data is needed include sites a) with complex subsurface conditions (e.g., multiple water-bearing zones, fractured bedrock, complex fluvial deposits, etc.), b) where free-phase or stratified contamination may be present (e.g., dense non-aqueous phase contamination, vertically stratified dissolved phase contamination, etc.), or c) where the direction of ground water flow is uncertain or variable.

Other methods to delineate the extent of contamination may be proposed and will be considered on a case-by-case basis. Inconvenience or costs are generally not acceptable arguments for requesting a less stringent demonstration of extent of contamination.

4.3.2 Field Screening

When conducting site investigation activities to delineate the extent of contamination or to otherwise evaluate contaminant levels, it is useful to have a quick means of checking for the presence of a contaminant while performing sampling activities. Use of field screening techniques provide ready access to results, thereby allowing decisions to be made in the field as to the direction the characterization effort should take. Field screening devices and test results may be used to reduce the number of samples that need to be collected for laboratory analysis, better position and perhaps reduce the number of permanent monitoring points that are installed. Field-based instruments like a photo-ionization detector (PID), flame-ionization detector (FID), immuno-assay type device, X-ray fluorescence, or indicator tubes are commonly used screening devices. Push type or other temporary soil and ground water sampling devices may also be used to screen for the presence of contamination. Many other types of field screening techniques, that provide immediate or real-time data output, are presently available and are continually being developed. Time is well spent identifying and determining the appropriateness of available field screening techniques since the end result may be an expedited characterization effort, a reduced number of sampling points, while reducing the cost of the investigation.

The type of field screening instrument(s) used must be selected based on the characteristics of the constituents known or suspected to be present. These methods are not 100% reliable, but can provide qualitative measurements that can demonstrate the presence of a compound when properly used, but cannot demonstrate the absence of a compound. Only samples collected using reliable methods and analyzed using laboratory instruments provide quantitative results. The sample and analysis plan that proposes to use field screening methods to characterize a site should explain why the method is suitable, what potential advantages it offers the site, identify its potential limitations and should list the conditions where a formal quantitative sample is to be taken.

It should be noted that accurate and reliable laboratory methods are presently available for use in the field to provide real-time analysis of samples while the investigation is underway. These mobile instruments are capable of providing quantitative sample results and should therefore be distinguished from the field screening methods and devices described above. The benefit of using laboratory methods and instruments in the field is that the analytical results can be used to more efficiently direct the characterization program, thereby reducing a) the total amount of time spent in the field, b) the cost of mobilizing sampling crews multiple times, c) the cost of having to prepare multiple plans and reports, and possibly d) the total number of samples collected.

4.3.3 Characterization Methodology

When investigating potential source areas and defining the horizontal and vertical limits of contamination, environmental sampling should be conducted in a manner that has a high probability of identifying contamination present on-site and off-site as a result of a release or releases from the facility. As was

discussed in Section 3.2, the field investigation may be conducted in an iterative manner or may be conducted using the more traditional, somewhat rigid multi-phase approach. Corrective action will be more efficient if the various steps are performed in an iterative way, sometimes with overlapping process elements and time frames. For example, the facility should consider developing a single site investigation plan that includes a decision tree that defines a process for characterizing the site from its beginning to the end, thereby eliminating the need for multiple interim reports and work plans. Such a dynamic work plan would lay out the decision logic that will be followed in determining data needs, and describe how the proposed approach for collecting and analyzing samples will support the decision logic. Coupled with the use of field screening techniques, the iterative approach would allow for a dynamic characterization process, wherein the sampling locations are adjusted daily based on information acquired the previous day. In another example, data that may be used to evaluate a particular remedial alternative is collected at the same time that the extent of the contamination is being defined. Many facilities have found that the iterative approach can be more cost, time, and resource efficient. It is our preference that such an iterative sampling approach be used to define the nature and extent of the contamination since it focuses the facility's resources on data collection, not document preparation. At the same time, Department staff focus their attention on the review and approval of activities that are critical to the outcome of the corrective action process. This approach naturally requires detailed pre-planning that identifies the necessary steps and decisions that need to be made to fully complete the characterization work.

A recommended approach to characterizing the extent of contamination using an iterative process is illustrated in Figures 1 and 2. If analysis of proposed sampling points indicates that further characterization is necessary, the party conducting the investigation should use a 45-degree step-out method to identify additional sampling points needed to fully characterize the release. The exact locations of the new sampling points may be adjusted based on site-specific circumstances. This method should continue to be used until the full horizontal extent of contamination has been defined. In this instance, the Department would approve the initial set of sample points and the decision tree for selecting new sample locations using the 45-degree step-out method. No other interim plans or reports would need to be prepared or reviewed prior to completing the investigation. This approach has the potential to save considerable time and money for all parties involved.

It is the facility's choice as to whether the site is characterized using the iterative or multi-phase approach. In circumstances where data need to be collected quickly (e.g., to define known or suspected threats to human health and the environment), the Department may request or require the use of the faster, more flexible iterative approach. Regardless of which approach is used, sufficient data should be collected to satisfy the investigation objectives noted at the opening of this chapter.

4.4 Sampling And Analysis

Establishing clear objectives and goals for site investigation activities is paramount to a successful and cost-effective evaluation of potential contamination at a site. The amount and types of data to be collected are dictated by the objectives of the investigation. Experience has shown that a lot of time, effort, and expense have been spent collecting data that answers the wrong question, or only provide a partial answer. It is also critical that the sampling and data analysis be conducted with adequate quality assurance so that the Department will have confidence in the quantity and quality of the data collected. Checklist IV in Appendix 1 should assist the facility owner/operator develop an effective sampling and analysis plan.

Prior to beginning site investigation and sampling activities, the facility should develop appropriate data quality objectives (DQOs) to steer the investigation. The DQO process is a systematic planning process for decision-making, whose application should help site project managers define the type, quality, and quantity of data needed to make defensible decisions. The use of the DQO process can lead to more

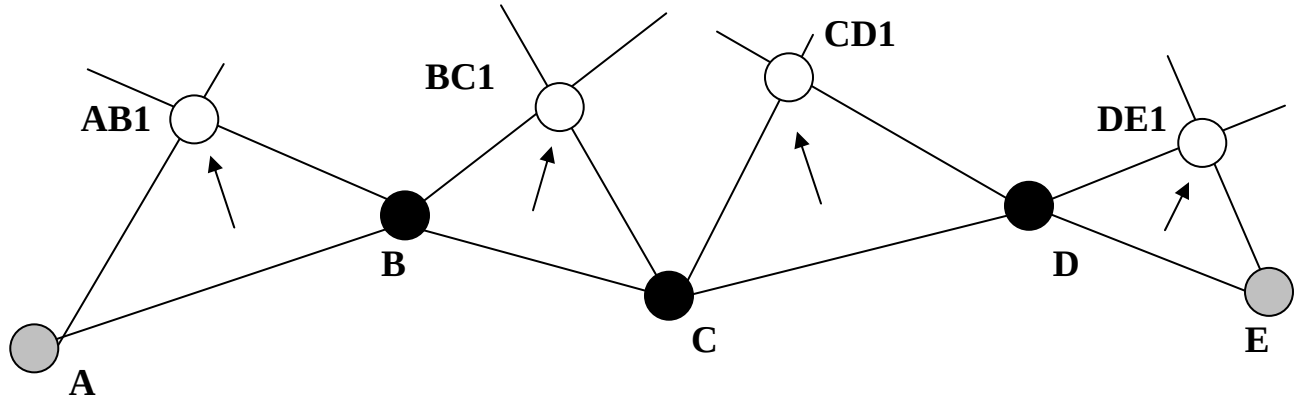

Figure 1. – Hypothetical sampling points A through E and 45-degree angle runs from each sampling point. New tier of sampling points are at line intersections.

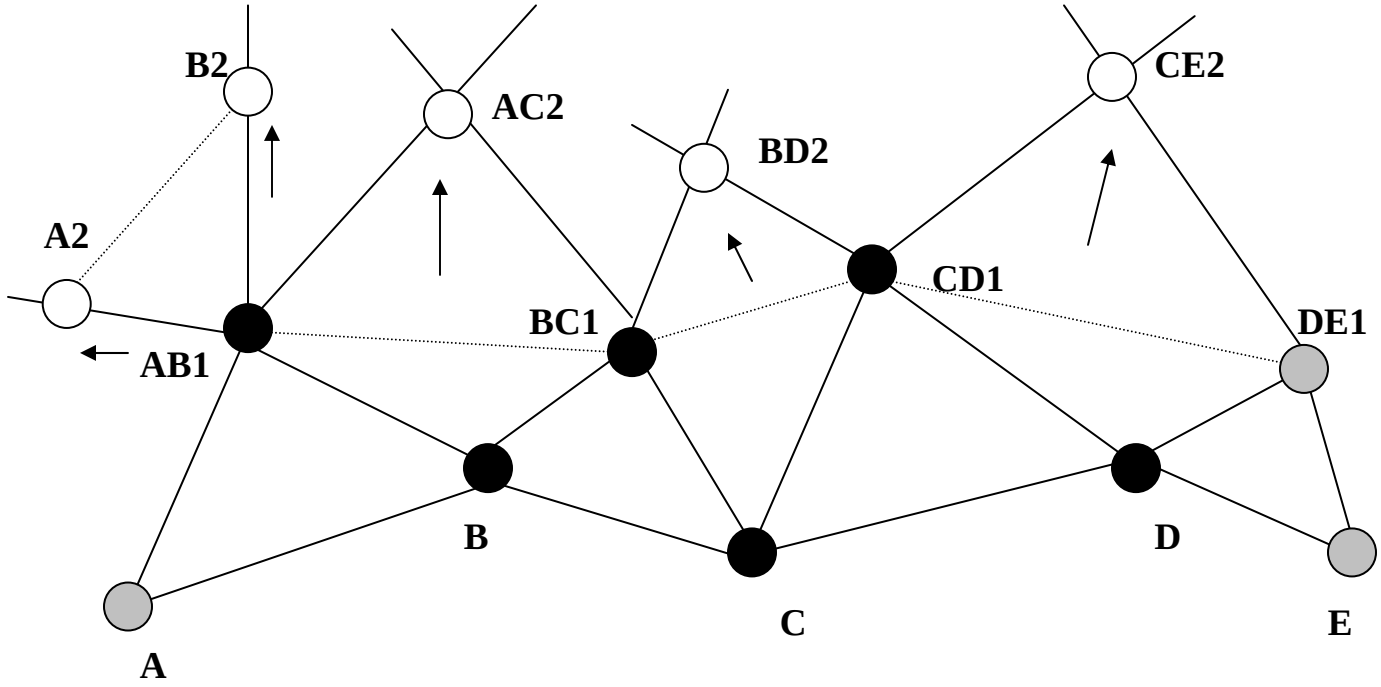

Figure 2. – Second tier of sampling points formed from 45-degree angle runs. Note the additional sampling points off of AB1 where contamination was found and a reverse 45-degree angle run was used to select the points.

Clean sample result

Contaminated sample result

Untested location

focused design of the sampling program that can save resources in later field investigation activities. Elements of a systematic, documented planning approach include:

- defining the project goals, objectives, and problems to be resolved;
- defining the boundaries of the site assessment;
- identifying the type of data needed and ways the ways in which the data will be used to support the project objectives and decisions;
- determining the quantity of data needed and specification of performance criteria for measuring quality;
- specifying the tolerable limits on decision errors;
- optimizing the procedures for obtaining meaningful and useable data
- identifying what decisions need to be made;
- developing rules for making decisions; and
- identifying project schedules, resources, and milestones.

Depending on site-specific circumstances, the process of developing the DQOs may be formal or informal, simple or complex, and explicit or implied. Facilities needing to collect large amounts of data over a long period of time are advised to prepare a DQO plan that will guide the data collection effort. At the other end of the spectrum, each of the DQO elements should be considered but not necessarily outlined in a formal plan at sites with small, easily remediated releases. In either case, the DQO process should be applied at all stages of the corrective action program – from initial early assessments to site investigations and remedial operations. The facility owner/operator should implement, operate, and maintain a quality assurance and quality control program to ensure that all analytical data collected, generated, and released is scientifically valid, defensible, and of known and acceptable precision and accuracy.

A sampling and analysis plan should be developed that clearly defines the exact goals of the program and how the goals will be achieved. It should be flexible enough, however, to allow adjustments based on results obtained during the course of implementation. Care must be taken that these adjustments don't cause the work to drift from the original objectives. A well-designed and implemented sampling and analysis plan yields scientifically valid data that helps achieve the desired goals of the site investigation.

The sampling and analysis plan should describe in detail the analytical procedures that will be used to determine the concentration of constituents in representative samples of potentially affected environmental media. The required precision, accuracy, detection limits, and percent recovery specifications should be set out in the plan. The sampling and analysis plan often includes provisions for both qualitative and quantitative analyses. Qualitative methods are used to process large volumes of media cheaply and quickly, and are often called "screening" methods. Qualitative methods are used to determine if a chemical or constituent is likely to be present, but can't definitively be used to determine what the concentration level is for that constituent. Examples include PID and FID meters, Geo-probe samples, and geophysical data. Quantitative analytical methods are used to measure attributes of representative samples and provide reproducible results with known accuracy and precision. These methods provide the most reliable data and are necessary for site assessment and monitoring activities. Quantitative analytical methods are also used to demonstrate the absence of contaminants in a sample.

Finally, the plan should specify data review, validation and verification requirements. This element should define when to accept, reject, or qualify data. It should also describe the process for detecting errors in sampling and analytical procedures. Data validation is the process of evaluating the available data (analytical results, field quality control data lab quality control data, and may also include field records) to ensure that the project objectives are met. Laboratories must follow established quality

assurance/quality control and validation procedures to ensure the data are scientifically valid and usable. One of the fundamental responsibilities of the site owner/operator is to ensure the reliability and validity of field screening and analytical laboratory data for decision-making purposes.

4.4.1 Representative Samples

A great deal of effort should be placed on ensuring the collection of representative samples. Representative samples accurately quantify the physical and/or chemical characteristics of the material being sampled. This concept applies not only to single samples but also to the entire sampling approach that may be employed at a site. It also applies to samples used for screening purposes and to those destined for laboratory analysis. If the samples, and therefore the resulting data, are not representative of actual site conditions, the data will either be inadequate for their intended purpose or in some instances may be rendered invalid. For example, a sample collected using a method that results in the loss of constituents of concern does not accurately characterize the media sampled and is therefore of no use. Or a single sample is collected in an effort to characterize a large area or volume. Although the resulting data may be representative of that single sample, it may not be representative of the entire area or volume, particularly if the media is heterogeneous or the contaminants may be unevenly distributed. Some things to consider when deciding if proposed sampling activities will result in the collection and analysis of representative samples include, but are not limited to, the following:

- ensure that samples are collected using equipment and methods that will either minimize or eliminate the loss of constituents that may be present;
- tests performed on materials that may contain volatile constituents should only be conducted on grab samples: the act of compositing a sample results in the loss of these constituents;
- volatile constituents should be sampled from areas that have not been disturbed (e.g., from the excavation sidewall, not the soil pile that has accumulated below) using techniques that minimize disturbance or exposure of the sample (e.g., using equipment and a method that does not result in the vigorous agitation of a water sample; containerizing a sample immediately, not waiting until after the soil core has been logged or screened);
- in those cases where composite samples may be collected, ensure that a statistically valid number of individual samples are used (e.g., 5 or 6 individual samples maximum, not 30, per composite) and have been collected from an appropriately sized area (e.g., one sample per 20, not 200, cubic yards);
- samples must be containerized, preserved and analyzed within holding times in strict accordance with Department and EPA approved guidelines;
- samples should be collected from areas where contamination is expected to accumulate based on the chemical and physical properties of the contaminants and the release characteristics (e.g., look for lead in surface soil at a radiator shop, not in samples collected from just above the water table; samples should also be collected from deeper depth intervals in a spill of solvent, not just from the surface soil where these constituents are expected to evaporate);
- a sufficient number of samples should be collected to account for the heterogeneities in the affected media (e.g., sand may absorb less contamination than clay; strata on the aquifer create preferential flow paths, resulting in contamination in one zone but not the other: layers of waste may have significantly different contaminant concentrations than the soil above and below it);
- a sufficient number of samples should be collected to account for the size of the potentially affected area or volume of material (e.g., 8 samples, not 1, may be adequate to define contamination in a football field sized area).

All sample results received by the Department will be critically reviewed to ensure that they are representative and reliable so that subsequent decisions will be made based on our confidence of the data. It is therefore important that work plans or reports clearly describe the sampling equipment, methods and preservation techniques employed to characterize a site. Reports should also include all quality

assurance/quality control data that may have been generated for a particular data set , not just the summary tables, so that data quality may be evaluated.

4.4.2 Sampling And Analytical Methods

All samples must be collected using professionally accepted equipment and methods. These are described in either ASTM Phase II environmental site assessment documents or EPA site investigation guidance documents. A list of references which describe appropriate sampling methodologies is included in this guidance document. The Department recognizes that site-specific conditions may warrant the use of modified sampling methods. Any variation from the equipment and techniques set forth in those reference documents must be described in the site characterization work plan or report so that their influence on the sampling data may be evaluated. It is recommended that prior approval to use these altered methods be obtained from the Department so that a determination of acceptability can be made before time and resources are spent collecting data. Failure to do so may result in the rejection of the sampling results or downgrading its use to that of qualitative data. Care should also be taken to ensure that the samples are placed in appropriate containers and preserved using approved methods. Failure to do so may also result in the non-acceptance of the resulting data.

All samples must be prepared and analyzed in strict accordance with the methods described in EPA's Test Methods for Evaluating Solid Waste (SW- 846). In a limited number of instances, the Department has established alternate procedures that vary from those set forth in SW-846 (e.g., sample preservation and analysis of indoor air samples). These Department approved procedures should be used in lieu of those recommended by EPA. Once again, the Department recognizes that site-specific conditions may warrant the use of modified analytical methods. Any variation from the methods established by either EPA or the Department must meet the project performance objectives and be described in the site characterization work plan so that their influence on the sampling data may be evaluated. Prior approval to use alternate methods must be obtained from the Department so that a determination of acceptability can be made before time and resources are spent analyzing samples. Failure to do so may result in the rejection of the sampling results or downgrading their use to that of qualitative data. Depending on the circumstances, the use of alternate methods must be approved by the Colorado Hazardous Waste Commission for an equivalency determination in accordance with the procedures outlined in Section 260.21 of the Colorado Hazardous Waste Regulations.

5.0 REMEDY SELECTION

Upon discovery of a release to the environment, plans must not only be developed for the complete characterization of the contamination, thought must also be given to what the ultimate cleanup goal for the site should be. The results of the site characterization effort and the desired cleanup goals will define the level of remediation that may be required. The cleanup goals consist of a combination of both fundamental performance standards and specific numeric cleanup standards. Performance standards are general cleanup targets that the responsible party strives to achieve in an effort to minimize or eliminate threats posed by the release to human health and the environment. An example may be halting the continued off-site migration of contaminated ground water. A cleanup standard is the numeric value that must be achieved in order to demonstrate that the performance standard has been met. This may consist of a risk-based soil concentration or an established ground water standard. For example, reducing contaminant concentrations in ground water to below State standards (numeric cleanup standard) at the property boundary will result in achieving the desired performance standard of halting the off-site flow of contamination.

The traditional approach to cleaning up sites has been to fully characterize the nature and extent of the contamination before any thought is given to what the appropriate remedy might be. Although this stepwise approach may be the safest with regard to decision-making, it slows down the cleanup process

and may present the greatest risk when it comes to protecting human health and the environment. The preferred approach is to consider and integrate risk and remediation early in the corrective action process. Making risk criteria decisions early, and as quickly as the data allow for an appropriate choice, will help to focus the corrective action effort on those factors which present the potential threat(s) to human health and the environment. Once a release is confirmed and sufficient information is available to understand its nature and, to a limited degree, its general extent, the risk characterization and remedy selection processes should commence and proceed in conjunction with the completion of the site characterization process. By allowing the characterization and remediation processes to proceed simultaneously along parallel but interacting paths, the facility will in most cases benefit by saving considerable time (the remedy may be implemented sooner, with fewer phases) and resources (the added cost of having to cleanup contamination that may have migrated farther from the source in the time it takes to implement a remedy). Once the release is confirmed, the following remedy selection process should be employed:

1. identify principal threat wastes (Section 5.1.1);
2. implement interim measures to eliminate principal threat wastes (Section 5.2.1);
3. select screening risk limits (Section 5.1.1);
4. implement interim measures to eliminate or minimize contamination that might exceed a screening risk limit (Section 5.2.1);
5. identify general performance standards (Section 5.1.2);
6. select or calculate screening levels (possibly becoming the final cleanup levels) for the purpose of defining the outer boundary of the contamination (Section 5.1.3);
7. formulate a short and/or long-term cleanup strategy (Section 5.3);
8. calculate site-specific risk-based cleanup standards (Section 5.1.3);
9. select and design a remedy or remedies that are capable of meeting the short and/or long term performance standard and associated cleanup standard (Section 5.4).

With the possible exception of step 9, all of the actions noted above may be conducted simultaneously with the site characterization effort. Delaying the completion of these tasks until after having completely characterizing the site will considerably lengthen the corrective action process, especially if more field data must be collected, bench scale tests performed or pilot tests completed before a remedy can be selected.

5.1 Screening Risk Limits, Performance Standards And Final Cleanup Levels

Performing risk analysis is by its nature an iterative process that should be initiated as early as possible in the corrective action process. Using available data and information, risk-based decisions should be made at the outset in order to guide the nature and extent of the investigation work, and eliminate risks to human health and the environment using short and long-term remedies. The risk criteria used to make these decisions generally depend upon the stage of the corrective action process. Screening risk limits are used early in the process to identify and target for elimination wastes and contaminated media that pose the greatest risk. Performance standards are established later on for the purpose of narrowing down the list of available alternatives for responding to a release. Cleanup levels are established to judge the success of meeting specified performance goals. Each of these risk criteria are discussed in the sections that follow. The Department representative and facility owner/operator should get together early in the corrective action process to decide which of these limits and/or standards should apply based on site-specific considerations. Doing so will allow the site manager to:

- know from the start the ultimate objective for the site and the basis for all activities conducted under the corrective action program;

- design a sampling program to collect the necessary data to support the achievement of the performance standard and cleanup goal (e.g., collect data to support the design and implementation of a presumptive remedy);
- know from the start what concentration may be acceptable for defining the extent of the contamination (e.g., characterize down to a health-based concentration, not to the method detection limit or background, or vice versa if the situations requires it).

This knowledge will allow the site manager to conserve time, effort and resources by limiting data collection to that information necessary to support the desired cleanup goal. Problems that can be avoided include: the added time and expense of having to implement additional investigation phases to define the full extent of contamination; the added time and expense of having to collect new data to support the selection of a remedy from a list of available options (e.g., does the impacted formation have the properties necessary to allow in-situ treatment or are the options limited to ex-situ methods?), and; the added time and expense of having to collect new data to support the installation of the preferred remedy (e.g., define the properties of the impacted formation that are critical to the spacing of recovery wells, vapor extraction points, etc.).

5.1.1 Principal Threat Wastes And Screening Risk Limits

A principal threat waste is a source material considered to be highly toxic, highly bioaccumulative or highly mobile and that generally cannot be contained in a reliable manner or would present a significant risk to human health and the environment should exposure occur. A screening risk limit, a risk-based performance standard, may be calculated and used to discriminate between those releases that pose a significant threat to human health and the environment (a principal threat waste), and which require a short-term response, from those releases that pose less of a threat and can be addressed with a long-term remedial action. The screening risk limit highlights contaminated media that pose the highest risk, thereby allowing the site manager to focus resources to address those releases. Site managers should consider taking immediate action (interim measure) to respond to principal threat wastes and contaminated media that contain contaminants at concentrations that exceed a screening risk limit. Doing so will protect site workers, the surrounding community and ecological receptors. Quick action may also eliminate or reduce the continued spread of contamination, thereby reducing the area that may be impacted by the contamination, which in turn may result in having to spend less time, effort, and resources remediating the release.

Obvious examples of principal threat wastes include, but are not limited to:

- highly concentrated source materials, such as:
  - waste contained in drums, lagoons, or tanks of questionable integrity;
  - free phase contamination floating on the water table or which has sunk to the bottom of the aquifer (but generally excluding ground water);
- waste or contamination that poses an actual and immediate threat to human health or the environment (e.g., consumption of contaminated ground water above drinking water standards, exposure to contaminant vapors at unhealthy levels, highly contaminated soil that has migrated onto a nearby residential property);
- mobile source material, such as surface soil or subsurface soil containing high concentrations of contaminants that are (or potentially are) mobile because of wind entrainment, volatilization, surface runoff, or subsurface transport;
- highly toxic or bioaccumulative wastes that have the potential to pose an immediate threat to human health or the environment, or which may accumulate through the food chain, such as:
  - soil or waste materials containing high concentrations of highly toxic materials;

- Soil or waste materials containing mercury, PCBs, dioxins furans and some polynuclear aromatic hydrocarbons.

Several other examples of principal threat wastes based on risk screening limits include:

- media concentrations with a $1x10^{-5}$ excess lifetime cancer risk for carcinogens and a hazard quotient greater than 1 for noncarcinogens;
- soil concentrations that exceed saturation limits such that free phase contamination may be present. At these concentrations, the contaminants may be more mobile and have the increased potential to affect other media.

5.1.2 Performance Standards

It is important that well-defined performance standards be established early in the corrective action process so that the site characterization will result in the collection of data necessary to either demonstrate that the performance standard has already been met or to support the selection of a remedy that will meet the desired standard. Early consideration of performance standards may avoid the time and expense needed to collect additional data later in the process and the resulting delays to the entire cleanup program. Once established, the responsible party must use their professional discretion to determine how to best meet those standards. The Department's role in most cases will be to provide or approve the initial performance standard (if deemed necessary), the final numeric cleanup standards, participate in the remedy selection process and monitor the efforts to successfully achieve the desired cleanup objectives.

To assist in this effort, the following is a list of principal performance standards commonly utilized by the Department, one or more of which may be applicable to a site depending upon the characteristics of the release and the affected media. It is the expectation of the Department that a site undergoing cleanup must meet all of the applicable performance standards listed below unless agreement is reached beforehand on which of the standards apply and/or how they might be modified. Other examples of performance standards may be developed by the Department and/or facility owner/operator based on site-specific circumstances.

5.1.2.1 Waste

- Removal, decontamination, and/or treatment of waste or contamination to eliminate or abate principal and immediate threats at a site.

- All solid or hazardous waste should be removed and properly disposed of, unless a proposal to leave waste on-site is approved by the Department and the necessary permits, engineering controls, land use restrictions, and/or any other available mechanisms are in place.

- The corrective action should, at a minimum, provide for the removal of free phase contamination to the extent practicable.

5.1.2.2 Soil

- No soil remaining in place should exhibit the hazardous waste characteristics of ignitability, corrosivity, reactivity, or toxicity as defined in 6 CCR 1007-3 Part 261 Subpart C, unless a proposal to do so is approved by the Department and the necessary permits, orders, engineering controls, land use restrictions, and/or any other required mechanisms are in place.

- Exposure to residual contamination following corrective action should not cause food chain contamination, damage to soils or to biota in the soils which could impair the use of soils for

agricultural or silviculture purposes, adverse effects on vegetation or wildlife, or the accumulation of vapors in buildings or other structures which pose a threat to human health or the environment.

- The residual concentration of regulated substances should pose no significant risk to human health on the basis of standardized exposure assumptions and defined risk levels for residential properties. Doing so will allow for unrestricted future use of the property. Alternatively, the facility may propose to remediate soil to concentration levels that pose no risk to current and potential future uses, assuming that the necessary permits, engineering controls, land use restrictions, and/or any other available mechanisms are in place. See section 5.1.3 for the criteria these health-based standards must meet.

- The corrective action should not leave behind constituent concentrations which will have the potential to cause contamination of a) ground water at levels that will exceed established State ground water standards and b) surface water at levels that exhibit acute toxicity to aquatic life or pose a risk to human health based on current or intended uses. These performance standards should be met unless a proposal to utilize an alternate standard is approved by the Department, including the Water Quality Control Commission, and the necessary permits, engineering controls, land use restrictions, and/or any other available mechanisms are in place.

5.1.2.3 Ground water

- The corrective action should be capable of performing, at a minimum, one of the following: 1) halt the continued migration of ground water contamination beyond the facility boundary at concentrations in excess of health-based or State established standards or 2) halt the continued expansion of the contaminant plume if confined within the boundaries of the facility.

- At permitted TSD facilities, there is a requirement that the facility remove or treat in place any hazardous constituents downgradient of the point of compliance, regardless of whether contamination has reached the property boundary or moved beyond it.

- The corrective action should be capable of remediating, through the use of active and/or passive measures, ground water contamination that has migrated beyond the facility boundary so that it 1) no longer poses an immediate risk to human health and ecological receptors (short-term goal) and 2) results in achieving health-based or State established standards within a reasonable period of time (long-term goal).

- The corrective action should be capable of eliminating and/or preventing contaminated ground water from discharging into surface water bodies at concentrations that may exceed established water quality standards, exhibit toxicity to aquatic life, pose a threat to ecological receptors that may feed on the aquatic life, or pose a risk to human health based on current or potential future uses.

5.1.3 Final Cleanup Levels

Cleanup levels are facility-specific chemical concentrations in the affected media that a final remedy should achieve. These numeric targets should be protective of human health and the environment and, depending on the media, may take into consideration the current and proposed future uses of the site. Cleanup levels for human health should typically either be developed by using existing cleanup standards (e.g., State ground water standards) or developed based on the degree of actual or potential exposure to a contaminant (resulting in an estimate of dose) and the toxicity of the contaminant resulting in an estimate of risk. The potential for mobile contaminants, such as solvents, to leach and degrade water quality should also be a factor to take into consideration when establishing a site-specific cleanup standard. This approach ensures current as well as future protection of human health and the environment.

Consideration should also be given to the transfer of contaminants from one media, where it may not pose a risk, to another, where it may pose a risk. Examples include a) the transfer from ground water to soil gas and then indoor air or b) the discharge of ground water to a seep where actual exposures may occur or where an aquatic standard may be more stringent.

In general, health-based cleanup levels are calculated as follows:

- for known or suspected carcinogens, the cleanup level should be at concentrations that represent an excess upper bound lifetime risk to an individual of $1x10^{-6}$. For sites with multiple contaminants, cleanup levels should be set so that the risk posed by individual constituents does not exceed a $1x10^{-6}$ <u>and</u> where the cumulative (total) excess upper bound lifetime risk from all contaminants does not exceed a $1x10^{-5}$.

- for constituents associated with adverse effects other than cancer, cleanup levels should be established at concentrations to which human populations, including sensitive subgroups, could be exposed on a daily basis without appreciable risk of negative effect during a lifetime. Such levels are interpreted as being equal to or below a hazard quotient of one. For sites with multiple contaminants or exposure pathways, cleanup levels should result in a cumulative hazard quotient (hazard index) equal to or less than one for all those constituents with similar critical endpoints.

There are many exceptions to the general rules noted above, including the fact that existing established standards may take into account other factors besides the protection of human health, the need for protecting ecological receptors, protection of ground water quality and other site-specific factors. Nor can one presume that applicable standards will be available for each contaminant during the data evaluation process. In these instances site-specific risk assessments, including both an exposure characterization and an effects characterization, may be required for complete evaluation of current and potential risks to human health and ecological receptors. For this reason it is imperative that the facility and the Department work together early in the remediation process to identify then constituents of concern, the exposure pathways of concern, select the appropriate method and calculate the cleanup level that will govern the long-term remediation of the site.

5.1.3.1 Ground Water Cleanup Levels

The Department is entrusted with the responsibility of ensuring that waste management activities do not impact State water resources, regardless of whether these resources are currently being used or have the potential of being used. Subsection 25-8-202(7) of the 1989 amendments to the State Water Quality Control Act (Senate Bill 181) restates and clarifies existing law, and provides a procedure for coordination between State agencies vested with responsibilities to implement water quality protection of State waters. As a result of this legislative act, the various government agencies that have some responsibility protecting water quality within the State entered into agreements with the Water Quality Control Division and the Water Quality Control Commission (WQCC) whereby they agreed to apply water quality standards and classifications established by the WQCC. The Department is obligated to apply these standards to the cleanup of sites.

Cleanup standards for ground water may be found in “The Basic Standards for Ground water” of the Water Quality Regulations (5 CCR 1002-41). Ground water standards for organic chemicals are listed in Table A of that regulation, while the inorganic chemical standards are listed in Tables 1 through 3 of that same document. It is to these standards that ground water must be cleaned up to at all sites. The only exceptions to this requirement are as follows:

- facilities permitted to treat, store or dispose of hazardous waste have the option to propose site-specific alternate concentration limits for ground water (6 CCR 1007-3, Section 264.94(b));
- facilities have the option of developing site-specific ground water standards and petitioning the Water Quality Control Commission for their adoption.

For those contaminants for which State standards have not been established, the facility may chose to a) use EPA's Clean Water Act maximum contaminant levels (MCL) or maximum contaminant level goals (MCLG), b) calculate a health-based drinking water standard using an MCL-equivalent methodology, or c) calculate a health-based standard using the Department's policy 96-2 "Human Health-Based Water Quality Criteria and Standards". The latter two options assume that toxicity data is available to perform such a calculation. Cleanup to an even lower standard may be necessary if the contamination poses a threat to ecological receptors (discharge to surface water) or if it is not protective of other exposure pathways (e.g., the indoor air pathway).

The short-term goal of a ground water remediation effort is to prevent contamination from migrating across the facility boundary and beyond. Doing so limits the spread of contamination and minimizes/eliminates the potential for exposure to it on downgradient properties that the facility neither owns nor controls. At treatment, storage and disposal facilities, the point of compliance where these standards must be achieved is located along the downgradient boundary of the regulated unit. The long-term goal is to cleanup this resource such that the State standards, or health-based standards in the absence of State standards, are achieved at all locations both on-site and off-site. Contaminant plumes that are confined to areas within the facility boundary also need to be remediated to prevent the continued degradation of this resource above established concentration limits and to eliminate the possibility of having it move off-site at a later date.

5.1.3.2 Surface Water Cleanup Levels

In the event that activities have resulted in the contamination of surface water, the remediation goal should be the most stringent of one of the following cleanup levels:

- the appropriate surface water standard, as established by the Water Quality Control Division, for that surface water body. This applies only to those surface water bodies, primarily rivers and interconnected ponds and lakes, for which water quality standards have been established.
- a health-based concentration that is protective of human health using a drinking water exposure scenario (unrestricted use designation).
- a concentration that is protective of aquatic life or other wildlife found in the area.

The release of contaminants to surface waters of the State is viewed as a point source discharge for which a permit would be required from either the EPA (federal facilities) or the State (non-federal facilities). In the event a permit is granted for such a discharge, the standard established in that permit would become the effective cleanup goal.

5.1.3.3 Soil Cleanup Levels

A facility may propose the use of an appropriate cleanup level for soil using one of four options: Tier 1) background/method detection limit objectives; Tier 2) Department established generic soil remedial objectives; Tier 3) site-specific adjustments to the generic soil remedial objectives; and Tier 4) site-specific risk based soil remedial objectives. The following is a brief description of this tiered approach. For more information, please refer to the Department's December 1997 "Soil Remedial Objectives Policy Document.

Tier 1: Background/Method Detection Limit Objectives

Under this Tier, the analytical method detection limit for a constituent or the naturally occurring background concentration for a constituent may be used as a soil remediation objective.

Tier 2: Pre-established Generic Remedial Objectives

Through the above referenced document, the Department has established remedial objectives for the cleanup of soil using conservative assumptions on the nature of the contamination and risk. Cleanup of soil to the stated levels will be agreeable to the Department and will, hopefully, allow quick cleanup to known acceptable levels. The advantage of using these standard numbers is that the time and cost of additional study associated with performing a site-specific risk assessment is eliminated and cleanup can proceed quickly.

Tier 3: Site Specific Adjustments to Pre-established Generic Remedial Objectives

Tier 3 allows for consideration of site-specific information to modify the Tier 2 method of calculating soil remediation objectives or to calculate soil remediation objectives for hazardous substances not listed in the generic table. In the development of the generic Tier 2 remedial objectives, conservative assumptions were made about the nature of site soil, water, air and nature of the contaminant. Not all of these assumptions may apply to a specific site. Certain site-specific parameters can be measured and those values used to calculate alternate cleanup levels for soils. The site-specific information and calculations must be submitted to the Department for review and approval.

Tier 4: Site Specific Risk-based Soil Remedial Objectives

Tier 4 sets forth a flexible framework to develop remediation objectives by allowing the facility to conduct a more detailed evaluation of site information in an effort to calculate safe, protective soil objectives unique to that site. A more sophisticated analysis may be performed that includes the use of complex chemical fate-and-transport models and probabilistic evaluations of possible exposures and risk. Or a facility owner/operator may take a very simple approach by proposing standards that have been adopted by other States or EPA Regions.

5.1.3.4 Indoor Air Cleanup Levels

Indoor air cleanup levels are calculated using the general approach noted in the opening of this section, i.e., for known or suspected carcinogens, the cleanup level should be at concentrations which represent an excess upper bound lifetime risk to an individual of $1x10^{-6}$ per chemical, with a maximum of $1x10^{-5}$ for more than ten constituents, while for non-carcinogens the hazard quotient should be less than or equal to one. For sites with multiple contaminants or exposure pathways, cleanup levels should also be equal to or below a hazard index of one.

5.2 Risk Management Decisions

When technologies and resources permit, achieving cleanup goals in the near term that allow for unrestricted use of the property is most desirable. However, historical experience and technical realities have shown that there are practical limits to cleaning up sites completely and within a reasonable time frame. When no reasonable solutions are available, appropriate risk management may be the only practical and effective way to deal with the intractable cleanups.

Risk management is the act of identifying and implementing actions to reduce an unacceptable impact at points of exposure. Examples include capping areas of contamination to eliminate leachate generation,

removing drums of waste, providing an alternate water supply or denying access to contamination through the use of physical barriers or institutional controls.

The traditional approach to cleaning up sites has been to implement the various steps of the corrective process in a sequential manner, utilizing phased investigations, performing a risk evaluation followed by selection, implementation, and monitoring of a remedy. Risk management decisions are typically made in the latter stages of this process, after the site has been characterized and when remedies are being considered. The problem with this approach is that this process is inefficient and can impair the site managers as they strive to quickly develop a protective, reliable and cost effective remedy. The alternative is to evaluate and integrate risk reduction activities early in the site characterization and remedy selection phases, thereby streamlining the process and focusing corrective action activities and resources towards a more specific endpoint. Things to consider early in the process include:

- establishing screening risk limits to identify and respond to source materials that may constitute principal threats to human health and the environment;
- identifying and responding to "principal threat" wastes;
- establishing final performance standards and/or cleanup goals so that the site manager may consider potential remedies as data are being generated and the collection of data may be tailored to preferred alternatives;
- consideration of the use of engineering controls to manage risk at the site;
- consideration of current and likely future land use in remedy selection;
- use of institutional controls to manage risk at the site;
- use of a phased approach to remedy implementation, which incorporates one or more of the considerations noted above, to address short and long-term threats posed by the site.

There are a variety of short-term and long-term risk management tools that may be used at impaired sites, their use being dependent on site-specific circumstances. The consideration and use of these tools are discussed in more detail in the sections that follow.

5.2.1 Interim Measures

An interim measure, sometimes referred to as a stabilization action, is a step taken to quickly control or eliminate threats to human health and the environment from either waste or contaminated media (principal threat wastes). The objective of the interim measure may be to stop releases of constituents and/or to prevent the further spread of contamination while long-term final corrective measures for the site are being evaluated. An interim measure may be required if the threat to human health and the environment is actual or imminent. Exposure of high-risk populations, such as children, may require the implementation of "real-time" interim measures, perhaps even emergency measures, to immediately reduce the contaminant levels near that population sooner than may be possible with final corrective measures.

Interim measures may be implemented at any point in the corrective action process. They may be implemented to respond to actual or potential threats posed by waste or contaminated media. They may be considered or implemented for an entire facility, a specific area or a specific environmental medium. It could be proposed by the facility or it may be required by the Department at any time during the corrective action process. Unless it is an emergency situation, the Department should be notified before a facility implements any interim measures to ensure that the Department agrees with the appropriateness of the interim measure.

Considering that quick action may be necessary to respond to a situation, Department imposed interim measures (either under a permit, compliance order, or an emergency order) will not require the submittal

of work plans for our formal approval. At the most, the Department may request that the facility owner/operator provide it with a conceptual design document so that comments may be offered and assistance provided in the selection and implementation of an interim measure. And since the interim measure is viewed as a stabilization effort, the Department may require that a performance standard be met, and reserve the need to meet a standard or cleanup level for the implementation of the final remedy. A performance evaluation plan may also be required so that the effectiveness of the chosen action to achieve this performance standard may be judged.

The facility may also voluntarily choose to implement an interim measure, either in response to an imminent and substantial threat or to simply commence with the cleanup of a release in an effort to expedite the corrective action process.

Benefits other than the protection of human health and the environment for implementing an interim measure early in the corrective action process include: it can reduce the quantity of environmental media that may need to be remediated; it can reduce the amount of time needed to remediate the release; it can reduce the overall cost of the remediation effort; it may reduce the concern the Department and public may have with regard to the release; and it may limit the scope of the regulatory impact.

Implementing the final corrective measure and completing cleanup of the facility is the long-term corrective action goal. Ideally, the interim corrective measure should be designed such that it may be incorporated into the final corrective measure at some point in the future. In the event a time critical action is unnecessary, an interim measure should only be implemented if it clearly has advantages over waiting for a final measure. Checklist VI in Appendix 1 should assist the owner/operator in determining what information may be required if interim measures are implemented.

If highly concentrated wastes are still present on-site, some possible interim measures include:

- overpacking and then disposing leaking drums and their contents;
- draining sumps, lagoons or other containers of waste that may pose a threat to on-site workers and/or may be contributing to environmental contamination;
- draining the contents of a leaking underground storage tank;
- digging-up and disposing of buried drums.

If contamination at a facility has impacted ground water in the area, some possible interim measures include:

- providing bottled water for ground water users to ensure that they are not exposed to contaminated water from impacted wells;
- treating contaminated ground water at locations where it discharges to surface water to ensure that exposure to the surface water does not occur;
- installing partially or fully penetrating physical barriers or some other hydraulic containment system to halt the migration of free-phase contamination, leaving the remediation of the dissolved phase contamination for the long-term remedy;
- halting the off-site migration of contaminated ground water that may pose a potential of actual threat to municipal water supply wells or the occupants of downgradient properties.

If soil at a facility is heavily contaminated, some possible interim measures include:

- installing a soil vapor extraction system immediately upon discovery of a release to minimize free-phase product impact to ground water;

- fencing-off the areas of contaminated soil to ensure that people can not be exposed to the contamination;
- excavating and removing highly contaminated soil to reduce the spread of contaminants while the residual low level contamination is dealt with during the long-term remedy;
- capping the contaminated soil with a low permeability material to eliminate people's exposure to contamination and reducing the amount of rainfall that would percolate through the soil and mobilize the contamination;
- installing stormwater run-on and run-off controls, to eliminate the possibility that the contamination would spread during storm events.

The question of whether to implement interim measures at a site undergoing cleanup should be answered based on a series of policy and technical judgments. These judgments, as a group, should form a basis upon which the relative benefits to be gained through interim measures at a particular site are weighed. Interim measures should be considered an option at a facility up until the point where it becomes more expedient and cost-effective to implement the final corrective measures. Generally, the immediate implementation of final corrective measures, rather than an interim measure, becomes more efficient after the evaluation of remedial alternatives has been completed, because the effort and resources that might be used to plan, design, and construct interim measures may be more effectively spent on the implementation of the final remedy.

To evaluate whether or not an interim measure would be applicable at a facility, the following questions must be considered:

- are humans or environmental receptors currently being exposed to contaminants released from the facility?
- is there a potential for human exposure or that environmental receptors could be exposed to the contaminants released from the facility before a final remedy can be implemented?
- could an interim measure reduce the present or near-term risks to human health and the environment? If it can be quickly implemented and it will significantly reduce the present or near-term risk, interim measures should be favorably considered.
- could an interim measure at the facility reduce the scope, time and cost of the final remedy?
- has the site investigation provided enough characterization and release data to implement an interim measure, or can this information be obtained faster than the data needed to implement the final corrective measure?
- are appropriate interim measure technologies available to prevent the further spread of contamination, based on contaminant characteristics and the facility's setting?
- can interim measures be implemented more quickly than final corrective measures? Interim measures should be seriously evaluated if it is determined that quick implementation of interim measures could reduce near term and long term risks to human health and the environment.

Depending upon the type of interim measure selected, the Department may also require an operation and maintenance plan and/or a performance evaluation plan or some type of confirmation report to document that the interim measure has been implemented and the desired goal achieved. This is particularly true for interim measures that require a specified performance standard to be met and maintained. For example, if a pump and treat system is installed at the facility to control contaminant migration in ground water, an operation and maintenance plan for the pump and treat system would be required to ensure the uninterrupted operation of the system and a performance evaluation plan to demonstrate that the technology is effectively treating the contamination. On the other hand, if the interim measure consisted of excavation and disposal of contaminated soil, the Department may require confirmation sampling and waste shipment manifests to document that the soil had been completely removed and properly disposed.

5.2.2 Engineering Controls

Engineering controls can be used to prevent or minimize impacts at the points of exposure. Engineered controls are structures designed to prevent migration of contaminants of concern to the points of maximum exposure, or prevent exposure to constituents of concern. Typically, engineered controls do not directly reduce the constituents of concern, although concentrations may be reduced over time through natural attenuation. They may be used for both short and/or long-term management of risk at the facility.

Common types of engineering controls used as risk-based management options include:

- surface barriers to prevent people, wildlife or surface water from coming in contact with contaminated media; common types of surface barriers include fences or berms;
- caps designed to prevent the infiltration of precipitation and surface water into waste or contaminated media. Preventing infiltration could result in reducing leachate generation and the migration potential of compounds in the subsurface soil and ground water; it could also reduce contaminant transport via erosion and surface water. Caps can also reduce the vapor emissions from waste and contaminated media, which could minimize or prevent impacts via the inhalation pathway. Caps can also prevent direct contact with waste or contaminated soil, which could minimize or prevent impacts via the ingestion or dermal routes.
- cutoff walls are containment structures designed to prevent the migration of ground water from or into a source area. By preventing the migration of ground water, cutoff walls may minimize or prevent impacts from constituents of concern in ground water. Common types of cutoff walls include slurry trenches, sheet piling barriers, and grouted barriers.
- hydraulic containment barriers can consist of trenches, sumps, drains, and wells designed to reverse localized ground water flow gradients in such a manner as to reduce or prevent the migration of contaminated ground water. By preventing ground water migration, hydraulic containment barriers may minimize or prevent impacts from constituents of concern in ground water.

The use of engineering controls to meet a performance standard must include a mechanism to guarantee that the engineered control is maintained or operated to ensure protectiveness over time. This can be accomplished by adequate design of operation, maintenance, and monitoring specifications, in addition to placing an institutional control on the property that requires current and future owners to maintain the protection offered by the engineered control.

Operation, maintenance, and monitoring requirements developed for an engineering control must include specific activities and actions to maintain the integrity of the engineered control and to provide adequate notice of system failure. These requirements should, at a minimum, include the following:

- an operational performance standard for the engineered control and a mechanism to directly monitor performance;
- routine and non-routine (triggered) maintenance activities;
- operational procedures;
- monitoring parameters, methods, and schedules;
- contingency plans, including the use of redundant systems, for failure of active components;
- adequate time window in the event of systems failure to allow for contingencies to be evaluated, designed, and implemented before the points of maximum exposure are impacted;
- an institutional control to ensure the long-term maintenance and monitoring of the engineered control.

For those engineering controls that may be implemented as part of the final remedy, adequate assurances of maintaining their effectiveness must be provided to the Department.

In cases where the engineered control is used in conjunction with natural attenuation, the barrier should remain operable until the concentrations of the constituent of concern have attenuated to levels such that unacceptable impacts at the points of compliance and/or maximum exposure no longer exist.

5.2.3 Land Use Considerations

It is the Department's policy to consider current and reasonable expected future land use when a) developing or choosing media protection standards, b) evaluating receptor exposure scenarios, and c) evaluating the selection and timing of corrective measures. As can be seen, the choice of land use plays a major role in the remedy selection process and the long-term institutional controls that will need to be placed on the property. It is therefore vitally important that the facility owner/operator evaluate the impacts and benefits a chosen land use will have on the cleanup of a site early in the corrective action process. "Land use" in this context is not used in the sense of land zoning, but what activities are actually or realistically expected to be occurring on the site as they relate to exposure or potential exposure to contaminants during the entire time the contaminants are expected to remain.

For purposes of this guidance document, land use is broadly classified as being residential (unrestricted), industrial (restricted use) or commercial (restricted use). Residential land use includes:

- land use for dwellings such as single-family houses and multi-family apartments, children's homes, nursing homes, and residential portions of government-owned lands (local, state or federal);
- daycare facilities, educational facilities, hospitals, and playgrounds, because of the similarity of exposure potential and the sensitive nature of the potentially exposed populations.

Industrial and commercial land uses are generally those lands that a) do not support the land uses described above, and b) have institutional controls in place to prevent future residential uses. Please see the Department's December 1997 "Proposed Soil Remediation Objectives Policy" for a more detailed discussion on land use and the exposure assumptions for each land use category.

The Department understands that there are other land use designations besides the three noted above, some of which may be more appropriate for use at the facility. These alternate land uses are available to the facility for the purpose of cleaning up a site, assuming that the controls necessary to maintain them are available and are enforced. It should also be recognized that there may be rare instances where the residential exposure scenario is not protective of ecological receptors, in which case the Department will recommend that a remedy be selected in order to protect this more conservative land use and exposure pathway.

The residential land use setting is applicable to a site unless sufficient information is presented to justify the use of a commercial, industrial or other land use setting. The facility owner/operator should submit all supporting documentation justifying the application of a non-residential land use setting to the Department for review and approval. The Department may refute a classification other than residential if it believes that such a classification is inappropriate because a) the alternate use is not supported by the information provided, b) the necessary institutional controls (e.g., zoning) are not in place or c) it is determined that the classification may not be adequately protective of people or sensitive environments who are located in proximity to the property. The facility owner/operator is advised to seek Department input and guidance on the use of alternate land use settings, particularly if there is a question as to whether or not a proposed land use is appropriate and applicable for a specific situation.

The owner/operator of the impacted facility should strive to remediate their site to levels that do not pose a risk to human health, using a residential exposure scenario, and the environment, thus allowing

unrestricted use of the property both now and in the future (i.e., clean closure). Achieving this goal would allow the facility owner/operator to "walk away" from the site following closure and would provide the greatest amount of protection to all prospective users or residents. No land use restrictions would be necessary if a facility has been cleaned-up to such a standard. On the other hand, enforceable physical controls and enforceable institutional controls will be required for those sites that do not allow for unrestricted use of the property as a result of contamination being left behind at concentrations in excess of health-based concentrations calculated using the residential land use exposure scenario.

Contamination that has impacted property that the facility operator does not own (rental property) or has migrated beyond the facility boundaries brings into play an entirely different set of considerations and legal obligations, and may reduce the remedial options available to the party responsible for the release. This contamination must either be a) remediated using conservative remediation objectives that result in clean closure and unrestricted use of the impacted property or b) remediated to the extent asked for by the property owner. The facility owner/operator may not impose restrictions on the current or future use of properties it does not own, unless that property owner agrees to 1) the proposed cleanup standards, 2) the remedial alternative that will be implemented to achieve the cleanup goals, and 3) the imposition and maintenance of institutional controls to limit future land use or development if something other than clean closure is proposed.

Changes in the determined land use could impact the points of exposure by changing the exposure scenario evaluated. Therefore, an enforceable mechanism must be in place to ensure that a) the determined land use remains unchanged over time, b) the actual changes in land use can be identified and the impacts re-evaluated, and/or c) additional corrective measures are implemented if land use changes (only if the new land use is more restrictive than the old one). Unless the facility has “clean closed”, it is the owner/operator’s responsibility to monitor future land use as long as facility conditions could potentially impact on-site activities (worker exposures) or neighboring properties. The facility owner/operator could accomplish this monitoring through periodic independent audits of actual land use within the area of potential impacts. The frequency of the audits should be based on allowing enough time for appropriate recourse should the potential for unacceptable impacts arise from changes in land use. Land use monitoring should continue until a potential change in land use or site conditions would no longer result in unacceptable impacts at the points of exposure.

5.2.4 Institutional Controls

Institutional controls, restrictions imposed on land use to render exposure pathways incomplete, are often a critical component of the cleanup process and may be used by the facility owner/operator to ensure both the short- and long-term protection of human health and the environment, including ecological receptors. Specifically, institutional controls:

- are non-engineered instruments such as administrative and/or legal controls that minimize the potential to contamination by limiting land or resource use;
- are generally to be used in conjunction with, rather than in lieu of, engineering measures such as waste treatment or containment;
- can be used during all stages of the cleanup process to accomplish various cleanup-related objectives; and,
- should be “layered” (i.e., use multiple mechanisms) or implemented in a series to provide overlapping assurances of protection from contamination.

Institutional controls are a legal mechanism for imposing some restriction on land use or obligating the facility owner/operator to conduct certain activities to maintain protectiveness. These restrictions may include zoning restrictions, structure-use restrictions, land-use restrictions, natural resource-use

restrictions, well restriction areas, deed restrictions, deed notices, environmental covenants, declaration of environmental restrictions, access controls, monitoring requirements, site posting requirements, information distribution, restrictive covenants, and enforcement mechanisms such as consent orders, contracts, or post-closure permits. Depending on site-specific circumstances, institutional controls may be the only practical mechanism to afford an adequate level of long-term protection of human health by, for instance, eliminating pathways to contaminants.

The primary benefit of institutional controls is that they may be a quick and relatively easy way of minimizing or eliminating actual or potential exposure to contamination. However, the limitations and disadvantages of institutional controls are: they do not allow for unlimited exposure and unrestricted use of the property; contingencies may be required to protect against uncertainties in the ability of these mechanisms to provide the required long-term protectiveness; they may need to be periodically reevaluated and adjusted as site conditions change; long-term legal and financial responsibilities for inspecting and maintaining the site may be required; the required controls may be changed or terminated with little notice; they may be revoked at a later date; they may only be available for a narrow range of purposes; negotiation of an institutional controls can be lengthy; they may not bind subsequent owners or parties not named in the mechanism; and, by themselves, they are not likely to prevent incidental contact or consumption. These points illustrate how important it is for facility owner/operator‘s to evaluate institutional controls as thoroughly as the other remedy components when looking for the best mechanism for addressing site-specific circumstances. Failure to carefully think about their objectives and whether they can be realistically implemented could jeopardize the effectiveness of the remedy.

Five components should usually be present for an institutional control to be effective and enforceable. These are:

- an institutional control must be a written instrument specifically for a particular piece of land and filed with the local (county) land records office;
- the institutional control must communicate facility environmental conditions and summarize the impacts at the points of exposure, describing the release, constituents of concern, and pathways;
- the institutional control must precisely state the parties’ intentions regarding the scope (use restrictions and compliance monitoring restrictions) and duration of the restriction;
- the institutional control must expressly state that the Department has the jurisdiction to enforce the use restriction; and
- the institutional control must be maintained for as long as the contamination, and therefore the use restriction, remains in place.

Institutional controls are vital elements of response alternatives because they simultaneously influence and supplement the remedy to be implemented. On the one hand, the right mix of institutional controls can help ensure the protectiveness of the remedy; on the other hand, limitations in institutional controls may require reevaluating and adjusting the remedy components, including the proposed institutional controls. At some sites, remedy contingencies may be required to protect against uncertainties in the ability of the institutional controls to provide the required long-term protectiveness.

The institutional controls employed by the Department include:

- **Environmental Covenant** – a voluntary, legally enforceable covenant that restricts the future use of properties where residual contamination is at levels that is safe for a specified use, but not all uses. The covenant provides an effective and enforceable means of ensuring the conduct of any required maintenance, monitoring or operation, and of restricting future uses of the land as long as any residual contamination remains hazardous. The environmental covenant binds the owner of the land, all

successors, and any persons using the land. It may only be terminated with the approval of the Department.

- **Compliance Orders on Consent**- a legally enforceable agreement between the Department and the facility owner/operator that once again identifies the area of concern and what actions are necessary to protect human health and the environment.
- **Permits -** these include both operating and post-closure permits. The permit, a legally enforceable document, would clearly identify the area upon which the restriction is placed and specify the conditions of that restriction.

Other institutional controls are available (zoning restrictions, deed restrictions, deed notices, access controls, site posting requirements) but not employed by the Department as the sole control because they either cannot satisfy the five components noted above or the limitations diminish their ability to prevent future exposures to the residual contamination. However, they too may be used to supplement the available mechanisms noted above, further assuring that a chance encounter with the contamination will not occur.

Use restrictions specifically define the disallowed uses, allowed uses, and requirements and obligations of the facility owner/operator, which may include restricting the property use, placing conditions on use changes (e.g., requiring that property changes from industrial to residential use comply with all applicable protectiveness performance standards for residential use), and ensuring adequate maintenance of, or restricting disturbance of, corrective action measures and engineering controls.

Compliance monitoring restrictions may be used to ensure that environmental conditions do not deteriorate such that the risk becomes unacceptable. Compliance monitoring can address 1) the operation and maintenance aspects of long-term site management to verify potential impacts at the points of exposure, and 2) maintenance of engineering barriers and other physical requirements to ensure protectiveness.

The facility owner/operator that employs institutional controls as part of the site remedy has the legal and financial responsibility for inspecting and maintaining the site over time. In certain circumstances, the Department may also ask or require that the cost of maintaining long-term use and compliance monitoring restrictions be estimated and a mechanism put in place to ensure that these funds will continue to be available in the future. The Department has the option of disapproving a remediation proposal that relies on institutional controls to protect human health and the environment if it believes that the facility owner/operator's long-term ability to follow through on this commitment is in doubt.

The use of institutional controls as a risk-based management option may be complicated if the facility operator does not own the land or the contamination has migrated off the facility property. In these situations, the facility operator cannot obtain institutional controls to change the land use determinations without the consent of the property owner. It is the responsibility of the facility operator and the property owner to negotiate an agreement or settlement for the placement of institutional controls in these circumstances. In the event the property owner does not agree to the institutional control on their property, the facility operator has little recourse and the performance standard and/or final cleanup level must be met at the impacted property.

Placement of an institutional control on the property must be accompanied by an actual or observed change in land use as required by the control if the requested land use is different from the current use. For example, after placing an institutional control on an undeveloped tract of land on the facility, the owner/operator may not continue to graze cattle on that land if the institutional control prohibits this activity.

The Department does not favor the use of institutional controls at the expense of cleanup alternatives that incorporate approaches with potentially greater long-term reliability and effectiveness, such as treatment or removal. The Department expects treatment or removal to address the principal threats posed by a site whenever practicable and cost-effective. When this is impracticable, the Department expects the use of engineering controls for wastes and contaminated media that can be reliably contained and which pose relatively low long-term threats. The Department expects the use of institutional controls primarily to supplement treatment, removal, and engineering controls as appropriate for short- and long-term management to prevent or limit exposure to hazardous waste and constituents that are left in place. The use of institutional controls should not substitute for active response measures as the sole remedy unless such active measures are determined not to be feasible.

Since the use of institutional controls may play a significant role early in the corrective action process, it is essential that the Department be involved as soon as their application to the site is being considered, during the selection of an appropriate mechanism and when deciding how they may influence the characterization and remediation of the site. The Department will maintain its ability to disapprove the use of institutional controls after consideration of the proposed remedy and remedy selection criteria and expectations.

5.3 Timing Of Remedy Implementation

The remediation time frame is a facility-specific schedule for the implementation of a remedy. It includes the time necessary to construct the remedy and an estimate of the time to achieve the final cleanup objective. The Department believes that the remediation time frame should be reasonable based on facility-specific conditions and which provides flexibility that can maintain protectiveness while improving cost effectiveness. A longer remediation time frame can provide a greater range of possible cleanup options. Remediation time frames range from a matter of days (for simple removal actions) to years (remediation of ground water contaminated with persistent chemicals).

5.3.1 Single Step Remedy Implementation

Depending on site-specific circumstances, the facility owner/operator has the option of remediating a release to the environment in a single step or using a phased approach. As the name implies, the single step approach involves the implementation of the selected remedy with the goal of quickly correcting the problem and minimizing or eliminating future liability for the contamination. Examples of actions that fall under this category can include excavation and off-site disposal of contaminated soil to allow for unrestricted, or rapid treatment that immobilizes the contamination and/or eliminates its toxicity. This type of remediation effort is accomplished within a relatively short period of time and results in the Department's approval of a no further action request. Such an approach is the preferred option for a) relatively simple releases of limited extent for which b) remedial technologies are readily available and where c) the facility owner/operator has the resources to quickly implement and complete the remedy.

The typical process for the one step approach is as follows:

1. the approved remedy is implemented at the site (most often, the contaminated media are removed);
2. after completing the removal, the facility owner/operator collects confirmation samples of the formerly impacted area or media and has them analyzed for the contaminants of concern;
3. the facility receives the analytical data and compares them to the site cleanup standards;
4. if necessary, the cleanup continues until the standards are achieved;
5. once the standards have been met, the facility provides the Department with a report documenting the results of the remedy and the confirmation sampling, as well as any other supporting data demonstrating the success of the remedy;

6. the Department reviews the report and issues a "no further action" letter, if appropriate.

In all other cases the facility owner/operator will most likely use a phased approach to remedying the situation, perhaps using a combination of short- and long-term approaches to deal with different aspects of the problem. This is commonly the case when the situation is complex, more than one medium has been affected, and/or when resources are limited.

5.3.1 Phased Remedy Implementation

At some facilities the nature of the environmental problem will either dictate or offer opportunities for the development of the remedy in phases, which may focus on 1) one aspect (such as ground water remediation) of the remedy, 2) one area of the facility that requires immediate measures to control further environmental and human exposures problems, or 3) the use of a combination of long and short-term activities. Factors to consider when deciding whether or not to use a phased approach include:

Risk - situations that pose an immediate threat to human health or the environment (high risk) are addressed first while those releases that present minimal exposure concerns (low risk) are dealt with later and perhaps over a longer period of time.

Technical Feasibility - a reliable and effective long-term remedy may not be presently available to cleanup a release. In these instances, final cleanup of the site may be deferred until a later date when a new technology becomes available.

Cost - resources may not be available to remediate all release areas and affected media at the same time. The cleanup may need to be structured to allow the facility to generate the finances necessary to fully remediate the site.

Regulatory Requirements - regulatory and statutory requirements may determine the pace of cleanup (e.g., a schedule of activities outlined in an order on consent) or the sequence of events (e.g., need to first halt the off-site migration of contamination).

Community Acceptance - the public's level of concern with regard to the release and its impact on both the environment and their community may influence the pace and sequence of events to remediate the site.

Risk reduction measures may be classified as either short or long-term management actions. Use of both short and long-term options will result in the establishment of a phased approach to remediating the site. The facility owner/operator generally has the option of deciding whether a phased approach to risk management is used and what those activities may consist of. Tables 5 and 6 identify situations that may warrant the use of both short and long-term risk management options to address releases to soil and ground water. These tables also provide examples illustrating what these actions may consist of. The following sections go into more detail on the use of these options.

5.3.2 Short-Term Management Options

The initial remediation phase is to make cleanup decisions to address those areas of the facility and releases that pose a significant risk to public health and the environment. Resources should first be focused on those units and areas of the facility that have the greatest potential for exposure or release to environmental media. Principal threat wastes are located and eliminated, while risk screening limits may be used to identify areas of contamination that may pose a risk to current users of the site, as well as those located on adjacent properties. The goal of the short-term remedy may also be the elimination or substantial reduction of the inherent potential (toxicity, mobility, or volume) for wastes or contaminated

media to cause future environmental releases or other risks to human health and the environment (e.g., contamination that may be migrating into surface water or ground water). These actions are traditionally viewed as being interim measures, stabilization efforts designed to address either actual or potential threats and control the spread of contamination while the facility continues to develop or implement a long-term remedy to cleanup the site. The facility may also choose to remediate the site only to the extent necessary to halt the migration of contaminants and protect existing and potential future users of the site (short-term management option), deferring the final cleanup to a later date (long-term management option). Such an approach will almost certainly require the use of engineering and institutional controls to prevent or minimize impacts at the points of exposure.

The length of time that a short-term management approach is allowed to remain in effect is dependent entirely upon site-specific circumstances, including risk to public health, the potential for continuing releases into the environment, and the long-term plans of the facility. It could potentially last as long as several years. To ensure that a decision is made with regard to the long-term management of the site (final remedy), any proposal to implement a short-term remedy will need to be accompanied by a plan that outlines the long-term cleanup of the release and its associated contamination. This plan should at a minimum include the following information:

- a description of the short-term management proposal, including its goal, how this goal differs from the long-term cleanup of the site, what engineering and/or institutional controls may be required, and an estimate of the length of time necessary to complete its implementation and achieve the desired goal;
- a discussion of whether or not a more comprehensive final remedy is contemplated for the site and an estimate as to when this transition will occur. In the event that discussion of a final remedy is deemed to be premature (depending upon where the facility is within the corrective action process), the plan should specify when such a decision would be made in the future.
- a discussion of the criteria that will be used to determine when or if the facility will move from short-term to long-term management of the site and its contamination. The decision process should be sufficiently detailed to allow the Department to evaluate the proposal and determine whether the right questions will be asked and to ensure that the data will be available to provide the necessary answers.
- identify what additional data may need to be collected to allow the facility to make the decisions noted above, justify and support whatever decision are eventually made and to get the necessary approvals from the Department.

This short-term risk management option should be an element of the sites overall remediation plan that will be reviewed and approved by the Department.

5.3.3 Long-Term Management Options

The final step of this phased approach (or the only step if the facility chooses to immediately implement a final remedy) is to make long-term decisions with regard to the degree and extent of cleanup necessary to protect human health and the environment into the distant future. This option may also consist of implementing a long duration remedy, perhaps requiring many years to complete. The remedial options available for this final action may range from restoring the site to background conditions or to cleanup contaminated environmental media to health-based standards that allow for unrestricted future use of the property, all the way to allowing contamination to remain in the environment, implementing engineering controls to prevent exposures and contaminant movement, and obtaining the necessary permits and/or institutional controls to ensure the long-term success and enforceability of the remedy. Implementation of long-term remedies may be desirable when the remediation of contamination is presently not feasible (e.g., contaminated soil is located under a building's structural foundation), environmental restoration requires the use of techniques that require considerable time to complete (e.g., monitored natural

attenuation of contaminant plumes in ground water) or when final restoration is not necessary or practical in the short-term (e.g., restoration to an unrestricted use is not practical considering that the site will remain an industrial facility).

There may be instances when, after further evaluation, the short-term management option becomes the long-term remedy. In other situations a decision could be made at the beginning of the cleanup process to proceed directly to the implementation of a long-term remedy.

The long-term remedy will need to be proposed in a corrective action plan that is offered to the Department for review and approval. Long-term effectiveness monitoring is typically a crucial element of the plan to evaluate whether or not the chosen remedy is performing as desired or to ensure that conditions have not changed in such a way as to threaten human health or the environment.

Table 5 Risk Management Decisions – Soil

Risk Management Decisions - Soil Contamination

Situation Description	On-site contamination exceeds acceptable residential and industrial risk levels	On-site contamination exceeds acceptable residential but not industrial risk levels	On-site contamination meets acceptable residential and industrial risk levels, but not protective of ground water
Short Term Management Options - Examples (interim action, stablization based on current or likely exposures with existing land uses)	1) Source removal to residential levels 2) Source removal to industrial levels and restrict use to industrial 3) Install surface barrier to restrict contact with soils 4) Restrict use of site to all except protected cleanup workers	1) Source removal to residential levels 2) Restrict use to industrial 3) Install surface barrier to restrict contact with soils 4) Restrict use of site to all except protected cleanup workers	1) Source removal to ground water protection levels 2) Install impermeable cover to contaminated area to restrict infiltration 3) Install property boundary barrier to restrict off-site ground water flow 4) Do nothing until ground water impacted
Long Term Management Options - Examples (final remedy, based on potential exposures and long-term land use)	1) Source removal to residential levels 2) Source removal to industrial levels and restrict use to industrial through enforceable controls	1) Source removal to residential levels 2) Restrict use to industrial through enforceable controls 3) Design engineered barriers to restrict contact and enforce maintenance through institutional controls	1) Source removal to ground water protection levels 2) Install ground water remediation system that includes source removal 3) Monitored natural attenuation with enforceable triggers for active remediation

Some options may not be viable or allowed due to site-specific conditions.

Table 6 Risk Management Decisions – Ground water

Risk Management Decisions - Ground Water Contamination

Situation Description	On-site and off-site contamination exceeds State ground water standards	On-site contamination exceeds State ground water standards, off-site meets standards	On-site and off-site contamination meet State ground water standards, but likely will exceed if source not remediated.
Short Term Management Options - Examples (interim action, stablization based on current or likely exposures with existing land uses)	1) Source removal to prevent further release 2) Source containment to prevent further release 3) Install property line barrier/treatment to prevent further off-site migration 4) Restrict use of ground water until long-term remedy	1) Source removal to prevent further release 2) Source containment to prevent further release 3) Install property line barrier treatment to prevent further off-site migration 4) Restrict on-site use of ground water until long-term remedy	1) Source removal to ground water protection levels 2) Install impermeable cover to contaminated area to restrict infiltration 3) Install property boundary barrier to restrict off-site ground water flow 4) Do nothing until ground water remedy selected
Long Term Management Options - Examples (final remedy, based on potential exposures and long-term land use) **Some options may not be viable or allowed due to site-specific conditions.**	1) Source removal to prevent further release 2) Install property line barrier/treatment to prevent further off-site migration 3) Install pump & treat to clean up off-site plume 4) Monitor off-site plume for natural attenuation with enforceable trigger for active remediation	1) Source removal to prevent further release 2) Install property line barrier/ treatment to prevent further off-site migration 3) Monitor off-site with enforceable trigger for active remediation	1) Source removal to ground water protection levels 2) Monitored natural attenuation with enforceable triggers for active remediation

5.4 Selecting A Remedy

Potential remedial alternatives should be identified and evaluated while the site characterization effort is underway. Once the extent and degree of contamination is adequately defined and a determination is made that remediation is necessary, the next step of the corrective action process is to select and design a preferred remedial alternative, or combination of alternatives. Factors to consider when deciding whether a proposed remedy will be capable of addressing the environmental problems at the facility include:

- the corrective action remedy should be protective of human health and the environment, including ecological receptors and their habitats;
- it should be capable of attaining performance goals and/or media cleanup standards;
- it should stop further environmental degradation by controlling or eliminating further releases that may pose a threat to human health and the environment;
- it should comply with any applicable standards for the management of wastes;
- it should have long-term reliability and effectiveness;
- it should be capable of reducing the toxicity, mobility and/or volume of wastes or hazardous constituents in the environment. As a general rule, remedies will be preferred that employ techniques, such as treatment technologies, that are capable of eliminating or substantially reducing the inherent potential for the wastes and/or contaminated media to cause future releases or other risks to human health and the environment.
- in situations where the actual or potential risk posed by the contamination is high, the remedial activities should have demonstrated short-term effectiveness;
- it must be implementable. There must be no technological or administrative obstacles to the design, construction, or operation of the proposed remedy.
- the relative cost of a remedy may be an appropriate consideration, especially in those situations where several different technical alternatives to remediation will offer equivalent protection of human health and the environment, but may vary widely in cost. In those instances where more than one remedial alternative is available and it is determined that they are equally efficient and cost-effective at remediating the contamination, the remedy that achieves the cleanup objectives in the shortest amount of time should be the one that is selected for implementation.

Some facilities with very extensive or highly complex environmental problems will likely require an assessment of a number of alternatives, remedial technologies or approaches. This may be necessary at "high risk" facilities with complex remedial solutions, where several different approaches are practicable, or when innovative treatment technologies may be viable. In these instances the Department may require an owner/operator to develop and evaluate a full range of remedial alternatives. On the other hand, those "low risk" facilities with straightforward remedial solutions are not required to perform an extensive evaluation of different remedial alternatives. In these situations the Department expects the facility to propose its preferred alternative and support its selection with documentation showing that it meets the factors noted above. Unless the situation involves a large, complex facility, the remediation proposal reviewed and approved by the Department will not require a formal remedial alternatives evaluation process.

5.4.1 Presumptive Remedy

Quite often the facility owner/operator will recognize a few practical remedial alternatives that can adequately address the situation once the release has been investigated. Preferred remedial alternatives for common categories of sites that have been successfully used at other cleanups are referred to as presumptive remedies. When appropriately applied, the use of presumptive remedies should reduce the cost and time required to remediate similar types of sites by focusing the investigation and simplifying the

remedy selection process. The key idea here is that it is widely acknowledged that the remedy will solve the problem.

A simple example would be the remediation of contaminated soil surrounding a solvent tank. A presumptive remedy would be to excavate the soil to an approved health-based concentration that is protective of ground water quality and dispose of it off-site. The Department would readily agree that this remedial approach will properly remediate the release. A non-presumptive remedy would be to remediate the release using in-situ techniques or natural attenuation, the final outcomes of which are less certain and may triggering the need for additional studies and investigations to determine if the proposed remedial option is appropriate.

5.4.2 Innovative Technologies

Innovative treatment technologies are alternative treatment technologies whose limited number of applications result in a lack of data on cost and performance. In general, a treatment technology is considered innovative if it does not have a proven track record that can back-up claims that it will successfully achieve a desired goal. Often, it is the application of a technology or process to a waste that is innovative, not the technology itself.

For remediation technologies, the traditional approaches of simple containment or digging and hauling contaminated material offsite can be replaced or augmented with treatment technologies that use biological, physical, chemical, or thermal treatment processes. New technologies and containment strategies can be used for soils, sediments, sludges, ground water, surface water, and leachate. Innovative technologies can also be used to either remove or contain source areas. Innovative technologies can provide options when site conditions (e.g., existing buildings or other immovable structures) prohibit the use of more traditional cleanup methods.

Facility owner/operators should consider using innovative technology when such technology offers the potential for comparable or superior treatment performance or implementability, fewer adverse impacts, or lower costs for acceptable levels of performance when compared to more conventional technologies. If the situation permits it, the use of innovative technologies is encouraged by the Department as long as it can be demonstrated that the agreed upon results can be achieved.

Detailed information about the site conditions and contamination must be collected to evaluate which of the possible innovative technologies will be capable of meeting the cleanup standards that may have been set. Other factors to consider include future use of the site, potential impacts to surrounding properties, and potential long-term liabilities from remediation activities. Decision makers should also weigh the costs/benefits of addressing a problem using innovative techniques, which may have greater risk associated with it, against the cost/benefits using more traditional methods.

Prior to selecting the final remediation technology, and as early as possible during the study phase, a treatability study should be performed to demonstrate that the innovative treatment technology would work at the specific site. The results of such a treatability study should be included with the proposed corrective action plan. An effort must be made to demonstrate that the preferred technology will work and has the ability of achieving the established performance standard or cleanup level. There are three levels of treatability study. The level chosen depends on the information available about the site, the technology and the nature of the information that is needed.

Laboratory Screening – This relatively quick and inexpensive study is done to learn more about the characteristics of the material to be remediated to determine if it would be treatable by a particular technology. Successful laboratory screening may lead to more sophisticated treatability studies.

Bench-Scale Study – This next level of treatability study provides greater information on the performance of a technology by simulating the treatment process using small quantities of the material to be treated. The objective of this type of test is to determine if the technology can meet the cleanup standard set for the site.

Pilot-Scale Treatability Study – This highest level test is usually conducted in the field and requires the installation of the treatment technology. This study is used to provide performance, cost, and design objectives for the treatment technology.

Similar to any other remedy that is implemented, it is critical that adequate monitoring data be collected to evaluate the performance of the innovative technology and determine whether it is achieving the desired goal. Since there may be a lack of data on the performance of the selected technology, monitoring requirements may be greater than what might be expected for an established technology. Contingency plans may also need to be developed and implemented in the event the technology does not work. The subject of performance evaluation and compliance monitoring is discussed in Chapter 6.

5.4.3 Proposing A Remedy

Following the adequate characterization of the release, the identification of the applicable performance standards and/or cleanup levels, and an evaluation of possible remedial alternatives to achieve those standards, the facility owner/operator will be expected to prepare a corrective measures work plan to address the release and its impact on human health and the environment. As stated earlier, much of this work should be conducted while the site characterization effort is underway, thereby minimizing the delay after the site is fully characterized before a remedy is implemented. The corrective measures work plan should identify the type of corrective action or actions that will be implemented and explain why it is the best remedy for the particular situation. Sufficient information must be provided to justify the selected corrective action remedial alternative.

The corrective measures work plan containing the proposed remedial alternative should include the following basic information:

- state the problem by describing the extent, degree and location of contamination to be cleaned-up. This may be summarized if the facility has implemented a phased corrective action process and this information has already been submitted in the form of a site characterization report.
- identify the applicable performance standard or final cleanup level that the recommended remedy will be required to meet for all affected media;
- identify the preferred remedial alternative to be implemented and explain why it is the best remedy at this particular site. Sufficient information must be provided to justify the selection made and to demonstrate that its use will effectively achieve the cleanup goal. If an innovative remedy is proposed, support the preferred selection with examples of its previous use in similar situations, and/or demonstrate its effectiveness by including the results of any treatability study that may have been conducted to evaluate its success remediating the contamination..
- propose, in detail, the actions to be taken to remedy the problem. A plan should be prepared in which the preferred remedy is selected, described and designed, along with a detailed description of the process that will be used to implement it and monitor its performance. The Department will evaluate whether the proposed actions will effectively remediate the contamination.
- describe, in detail, how the effectiveness of the proposed remedy will be verified and reported to the Department: sampling, analysis, and monitoring. Confirmation samples and/or monitoring data are necessary to demonstrate that the remedial alternative has been implemented as designed, that it is operating effectively, and is operating as necessary to remediate the contamination. Another way of

describing this part of the remediation process is to establish a process to demonstrate achievement of the cleanup goals.

- opportunities to enhance the performance of the operating system, based on performance data, should be written into the plan. Monitoring data should be critically reviewed on a periodic bases to ensure that the remedy is effectively cleaning up the contamination, and if not, its performance should be modified to enhance its ability to achieve the cleanup goals.
- propose a realistic schedule for implementation. The schedule should identify the key activities to be completed and by what date. Depending upon events, new data, or the performance of the selected remedy, the implementation scheduled may need to be modified during the course of cleaning up the site. The Department should be notified as early as possible when a change is anticipated.

See Checklists VII and VIII in Appendix 1 for more on what should be included in the corrective measures work plan.

The selection of applicable cleanup goals and the remedial alternative to achieve them should be a collaborative process involving the Department and the facility owner/operator, and/or its agents. The facility has knowledge of what the future plans are for the property and what it is capable of achieving with its available resources. The Department has knowledge of what regulatory requirements must be met and how best to go about achieving them in an efficient and effective manner. A considerable amount of knowledge and experience regarding remedial alternatives exists between the facility, their agents and the Department. It is recommended that technical meetings be held with all parties so that this pool of knowledge can be harnessed to craft a site-specific remedy that satisfies the needs of everyone involved. The goal of these meetings is to decide upon a remedial alternative that can subsequently be developed into a work plan that is approved with minimal modification and delay. If necessary, a conceptual design document may need to be prepared so that an outline of the preferred alternative may be presented to the Department for review and acceptance before additional time and resources are expended preparing a final document.

Unless specifically asked for or required (through a permit or order), the Department discourages the submittal of multiple corrective measure related documents, ranging from conceptual design documents, intermediate plans and specifications, and final plans and specifications (30, 50, 60, 90 and/or 95% design documents are given as examples). Usually, only the final work plan that will be used to implement the remedy in the field, and only those elements of the remediation proposal that are directly relevant to the items noted above will need to be reviewed and approved by the Department. It may be unnecessary to submit bid documents, electrical diagrams, plumbing diagrams, construction work plans, cost estimates, etc., unless they are deemed necessary to evaluate the ability of the recommended remedy's ability to achieve the cleanup goal.

In all cases, the Department will review and approve the corrective measures work plan. The only thing that may vary is the level of documentation necessary to support the remedy recommendation. Simple releases that are remediated using proven methods will require minimal supporting documentation, the implementation schedule and proposed confirmation sample locations being the most important elements of the plan. Complex releases, large areas of contamination or releases that pose a significant risk to human health will require the preparation of comprehensive and detailed corrective measure work plans that address all of the elements noted above. The facility owner/operator is advised to consult with the Department prior to preparing the corrective measures work plan so that the appropriate level of detail may be decided upon beforehand, thereby avoiding the unnecessary expenditure of time and effort preparing a document that is either deficient or filled with unnecessary detail.

Because the selection of a final remedy is one of the most important steps in the corrective action process, the Department may in some instances require the facility owner/operator to formally communicate the

proposal to the public. The public may be allowed to review and comment on the corrective measures work plan and, in some cases, a public meeting may be appropriate during which the proposed remedy is presented. Please refer to section 2.6 of this guidance document for the regulatory requirements and/or other criteria that may result in public participation during this stage of the cleanup process.

6.0 EFFECTIVENESS MONITORING DURING REMEDY IMPLEMENTATION

Upon receipt of the Department's approval of a corrective measures work plan, the facility owner/operator should implement the plan in accordance with the schedule contained within it. Besides implementing the remedy to cleanup the affected media, data must also be collected showing that progress is being made achieving the desired outcome. Eventually a point will be reached when the data suggest that the cleanup goals have been met and no further action is warranted. The focus of this chapter is on collecting data that are used to evaluate the performance of the remedial alternative selected, while process termination is the subject of Chapter 7.

6.1 Performance Evaluation And Compliance Monitoring Plan

Implementing a cleanup remedy in accordance with an approved plan does not automatically ensure that it is working correctly and that it is the proper one for the site. The facility must be able to demonstrate that the remedy is working as it was designed and that the cleanup goals will be achieved. To prove that the remedy is working adequately to remediate the contamination, the facility must develop and implement a compliance monitoring and performance evaluation program. Such a monitoring/evaluation program should be described in a plan that is included with the corrective measures work plan, or as a separate plan submitted just prior to the start-up of the selected remedial alternative. In either case, the compliance monitoring and performance evaluation plan is a key element of the corrective action process and must be reviewed and approved by the Department. The performance evaluation element of this plan relies on site monitoring data, collected both before and during remedy implementation, to demonstrate the cleanup is working. The compliance monitoring element of the plan relies on sampling data, collected both during and after remedy implementation, to show that the specified performance standard or cleanup levels have been achieved.

Facilities should design a performance monitoring program to:

- demonstrate that the remedy is performing according to expectations;
- detect changes in environmental conditions (e.g., hydrogeologic, geochemical, microbiological, or other changes) that may reduce the efficiency of the remedy;
- identify any potential toxic and/or mobile transformation products;
- verify that the contamination is not spreading above the levels of concern (either downgradient, laterally or vertically);
- verify that there is no unacceptable impact to nearby receptors, including wildlife;
- detect new releases of contaminants to the environment that could impact the effectiveness of the remedy;
- demonstrate the effectiveness of the institutional controls that were put in place to protect potential receptors; and
- verify attainment of short-term protectiveness or final remediation goals.

One-time, periodic, and/or continuous monitoring may be used to evaluate remedy performance. The frequency of monitoring should be adequate to detect, in a timely manner, the potential changes in facility conditions listed above. A presumptive remedy (e.g., scoop and haul) may simply require confirmation sampling to show that the contamination has been remediated while a long-term, perhaps innovative remedy to address a persistent chemical (e.g., in-situ enhanced biodegradation of chlorinated solvents) will require frequent monitoring for the duration of the cleanup. The monitoring plan should include

flexibility for adjusting the monitoring requirements over the life of the remedy. For example, it may be appropriate to decrease the monitoring frequency and number of constituents at some point in time, once it has been determined that the remedy is progressing as expected and very little change is observed from one sampling round to the next. In contrast, the monitoring frequency may need to be increased if unexpected conditions (e.g., plume migration or change in ground water use) occur or to determine the effect of modifications to the interim or final remedy. In general, most corrective action sites use periodic monitoring (typically quarterly monitoring in the long-term) to evaluate whether or not their remedy is working. Facilities should continue performance monitoring for a limited time after the final remediation goals have been achieved to verify that the cleanup is permanent (e.g., checking for the slow desorption of constituents from formation materials or seasonal fluctuations in site conditions, both of which may result the subsequent increase in contaminant concentrations).

Although the facility owner/operator may designate a number of monitoring points to obtain data about the chosen remedy's progress, it must ensure these points are ones that will give the best data to determine the remedy's effectiveness. Items such as sampling point placement, sampling depth, sampling frequency, and laboratory analysis quality can all affect whether the chosen points provide appropriate data.

In general, items the Department will expect to find in a well written performance evaluation and compliance monitoring plan include:

- a discussion of the anticipated outcome of the remedy and the interim milestones that will be used to demonstrate progress towards meeting short-term protectiveness goals or final remediation goals. If it can be reasonably calculated, the rate at which contaminant concentrations will decline in the affected media should be specified. Anticipated degradation products should be identified. Known system performance standards and their anticipated completion dates, based on past experience or the design of the remedy, should be presented. For example, measured declines in contaminant concentration should be compared to predicted degradation rates or the observed area of influence around a recovery well should be compared to what was anticipated for the system design.
- the number, location and frequency of samples to be collected should be specified, along with the justification for their selection;
- the analytes to be sampled for should be specified, along with the justification for their selection;
- if new data will be compared to previously gathered data to demonstrate the effectiveness of the chosen remedy, the baseline data must be identified, along with a description of how they were collected and justification for their use. Baseline conditions may have already been presented in the site characterization report.
- the mechanism that will be used to evaluate system performance should be specified.; Determining the success of the remedy may be as simple as comparing the results of confirmation samples to the established cleanup level, or it may involve a more complex statistical analysis of large data sets to discern trends in constituent concentrations.
- the plan should specify the quality controls that will be applied to the data set, thereby ensuring that the reported data meet acceptable established limits for the constituents being analyzed. The quality control limits established for each EPA sampling method and the recovery data for spike and blank samples should be carefully examined before accepting the data set.
- the plan should specify the length of time during which the performance of the system will be evaluated and compliance monitoring will continue;
- milestones should be established at which time system performance should be critically evaluated and a decision made as to whether it should continue operating, whether its performance should in some way be enhanced or if it should be replaced with an entirely different remediation system; and

- the criteria for determining when the cleanup is finished and corrective actions terminated should be specified, along with the justification for their selection.

A discussion of all of the points noted above may not be necessary depending on the remedial alternative chosen. A relatively simple remedy may only require the collection of confirmation samples while a complex remedy whose outcome is less certain would require that each point noted above be discussed to an appropriate extent in the plan.

6.2 Performance Evaluation Reporting

Periodic performance evaluation reports are required for those facilities that have implemented remedies that require more than one year to actively treat or contain contaminated media (management options other than the use of institutional controls alone). The purpose of these reports is to verify that the chosen remedial alternative continues to operate in an effective manner, that progress is being made to attain the desired cleanup goal and that human health and the environment are still being protected. For those cleanups that are successfully completed within less than one year following their implementation, the evaluation of the remedy's performance should be included in the completion report prepared at the end of the corrective action process.

An evaluation report will in some cases be required shortly after a remedy has been implemented to document system performance and to allow for early modification of its operation to enhance its ability to achieve the desired goals. For example, the radii of influence around recovery wells should be determined after system start-up to confirm that the pumping well network is capturing all contamination. Or data are collected verifying that biodegradation is enhanced with the addition of nutrients into the subsurface. Certainly those remedies that are considered to be innovative or whose long-term success is questionable will require documentation that they are effective at remediating the impacted media before the facility embarks on a long-term operation and maintenance program. This initial performance evaluation report should be prepared between three and six months after system start-up, longer depending on the remedy chosen or the characteristics of the site. Once the remediation system is determined to be operating effectively, performance evaluation reports will be required annually to once again demonstrate that progress is being made towards the cleanup goal.

At a minimum, the performance evaluation report should contain the following:

- all supporting monitoring data collected by the facility over a period of time to determine the success of the remedy;
- a comprehensive evaluation of the remedy's performance. This may include a discussion of the monitoring data, a comparison of these data against the anticipated results based on original design documents or past experience at similar sites, determining whether interim milestones have been achieved, trend analyses of the data, comparing and contrasting the data with previously gathered information, or verification that a specified performance standard has been met (e.g., halting the off-site migration of contaminated ground water).
- the report should list any recommendations for changes or enhancements to the remedy to improve its performance during the next evaluation period; and
- in the event the established performance goals or cleanup standards have been achieved, the evaluation report may become a completion report that may justify the termination of the corrective action process.

The performance evaluation report is submitted to the Department for review and approval. The Department will review the report and determine if the findings of the evaluation are supported by the data or whether the recommended changes, if offered, are adequate. If, based on this evaluation, the

remedy does not appear to be working as anticipated, the Department will request the facility either make appropriate changes to the remedy or implement another remedy to either augment or replace the original remedy.

Data collected during the performance evaluation and compliance monitoring phase of the cleanup will ultimately be incorporated into a completion report that will be the basis for requesting that the corrective action process be terminated. Collecting adequate data demonstrating that the cleanup objectives have been met will ensure that the Department approves the notice of completion in a timely manner.

7.0 COMPLETION OF THE CORRECTIVE ACTION PROCESS

The corrective action process is completed when:

1. all releases, including releases that have migrated off-site, have been adequately remediated to protective cleanup standards;
2. all required source control actions have been completed; and
3. all specified procedures for removal and decontamination of units, equipment, devices, and structures is complete.

Adequate remediation of contamination consists of one of the following actions:

- the contamination has either been completely removed from the affected media or reduced to a level suitable for "non-restrictive" use. All established standards and cleanup objectives have been achieved or clear and convincing evidence is presented showing that they will soon be met even if active remediation is discontinued; or
- the contamination that may still be present in the environment (at concentrations that are not safe for all uses) has been adequately controlled and will not present an unacceptable risk to human health and the environment, based on the existing, and potentially future, land use. This assumes that there are no continuing operation and monitoring requirements and that institutional controls are in place to ensure that human health and the environment continues to be protected, both now and in the future.

To complete the corrective action process, a completion report summarizing the cleanup actions taken must be submitted to the Department for review and approval. The time frame for providing this report is usually established in the approved corrective measures work plan or is determined when a specified performance or cleanup standard is achieved. The corrective measures work plan should also identify whether the site will be cleaned up to a non-restricted or restricted use scenario, although this can change based on site conditions or other variables encountered during the implementation of the plan.

After reviewing the completion report, the Department will make a determination that corrective action is complete when a review of the remedy indicates that releases have been addressed as necessary to protect human health and the environment. Compliance with corrective action requirements will be evaluated against the applicable regulations, any enforcement order, permit or other enforceable document imposing requirements at the facility, and/or any Department approved corrective action plan.

No further action letters will be issued to facilities that meet one or the other of the criteria noted above. The Department will prepare such a letter for the site as a whole or for individual areas that are cleaned up at a facility with multiple release points.

Some facilities have multiple sources of contamination that may not be contaminated to the same degree. The characterization and cleanup of each of these areas may necessitate the use of different methods with different completion timetables. In these cases, it may be useful to subdivide the facility to allow the

corrective action process to proceed at different speeds, possibly resulting in completing the cleanup process early in some areas. By "parceling" the property, portions of the facility could be clean closed while corrective action continues on other parts of the facility. This would allow the facility owner/operator to sell, reuse, or redevelop portions of facilities where corrective action is ongoing. The Department is willing to allow facilities to subdivide their property and is prepared to issue no further action letters for each parcel as soon as it is demonstrated that the corrective action process has been completed.

7.1 Non-Restricted Use

Once the approved corrective measures work plan has been implemented and the facility owner/operator can demonstrate through confirmation sampling that the contamination levels left behind either meet or are less than the Department-established risk-based levels for residential use of the property, the site meets a non-restricted use scenario. This means that any residual contamination does not pose an unacceptable risk to public health or the environment, for any exposure scenario, and that there are no restrictions on the future use of the property (except those imposed by local zoning). The "non-restricted" use designation is the most protective and is the preferred action whenever possible.

7.2 Restricted Use

If the approved corrective measures work plan calls for cleaning up the property to a risk-based level appropriate for any exposure scenario other than residential, the cleanup will meet a restricted-use scenario. In this instance, the owner/operator will need to demonstrate that the contamination does not present an unacceptable risk to human health and the environment based on existing and likely future uses of the facility. The owner/operator will also need to demonstrate that the residual contamination will not migrate and continue to degrade water quality above established state standards, or approved risk levels if no standards exist, at the point of compliance, that it will not be disturbed in the future, or that it will be properly handled if it is disturbed in the future. If contamination is left behind, an institutional control will be required to serve, at a minimum, the following purpose: identify the area of known contamination, prevent future disturbance of the impacted area, identify what the use restrictions are, and identify procedures that will be implemented to prevent unacceptable exposures to the residual contamination. The preferred institution control must be specified in either the corrective measures work plan or completion report, and must be approved by Department.

The corrective action process may be terminated at restricted use sites only on the condition that the use restrictions, and the enforceable mechanism guaranteeing these restrictions, remain in place as long as the residual contamination still poses a limited risk to the property, to other potential receptors, and to its present and future occupants.

7.3 No Further Action Letter

Once the completion report has been received, the Department will review it and make a determination on whether or not the information provided is adequate to demonstrate that the cleanup standards established for the facility have been met. If the Department determines that the facility has met those standards, the owner/operator will receive a no further action letter from the Department. A no further action letter is the written notice which states that the Department will not require any further cleanup activities at the facility based on the information and reports provided. The letter will confirm that approved plans have been successfully implemented, that cleanup objectives have been met and that no further action is required with regard to the release. The no further action letter does *not*:

- release the owner/operator from any liabilities associated with the release that has been remediated;

- release the owner/operator from any liabilities associated with other, undisclosed contaminant releases that may exist or are subsequently found on the property;
- release the owner/operator from any responsibilities or liabilities if hazardous substances are released on the property in the future;
- release the owner/operator from any responsibilities or liabilities if hazardous wastes or hazardous waste constituents are left in the subsurface;
- make claims with regard to other areas at the facility that may not have been investigated and is limited to the area that was subject to the corrective action process.

Once the facility owner/operator has received a no further action letter from the Department, they have completed the corrective action process and the Department will in most cases close the case file. There may be some instances where the approved institutional control may require the submittal of periodic notices that the use of the property remains unchanged and is still protective of human health and the environment. All cleanup reports and correspondence remain a part of the permanent public record. The documents remain on file with the Department and can be accessed during normal business hours through an open records act request.

If cleanup actions were conducted under an order, permit or under an approved corrective action plan, the owner/operator is also required to ensure any associated review fees are either completely paid or that some other arrangements have been made to pay them before the Department issues a no further action letter.

7.4 Voiding a No Further Action Letter

A no further action determination is based on all data made available by the facility to the Department. The Department will ensure that all available information on the site is considered before the determination is made. The approval of a no further action request applies only to conditions on the subject property and the state standards that exist as of the time of the submission of the request. In the event that additional contamination is found or if established cleanup standards change at some later date, the Department's no further action letter may no longer be valid and additional investigation and/or cleanup may be required. The Department's determination can also be voided if it is later determined that pertinent data were falsified, altered, omitted, or were found to be misleading.

GLOSSARY

Commercial Land use - Any real property designated or in use for stores, business enterprises of both a retail or wholesale nature. These entities may include facilities such as insurance or real estate offices, service stations, car dealers, hair dressers, auto repair shops or any of the myriad facilities that constitute a "business enterprise" in the common sense of the phrase. Workers would be the primary individuals of contact, however, customers could potentially spend several hours per day at certain facilities.

Compliance Monitoring - The collection and evaluation of monitoring data to document that a corrective measure, whether interim or final, has achieved a specified performance standard or cleanup level.

Contained-out Determination – A determination made by the Department that contaminated media no longer contains a hazardous waste and is therefore no longer subject to RCRA Subtitle C management and disposal requirements. The Department considers contaminated media to no longer contain hazardous waste when they no longer exhibit a characteristic of hazardous waste, and when concentrations of hazardous constituents from listed hazardous wastes are below health-based and ground water protective levels.

Contamination - A release of a hazardous substance or substances into the environment resulting in measured concentrations in excess of natural background levels.

Corrective Action – A range of activities that could occur in the context of addressing environmental contamination at RCRA facilities. It includes defining the nature and extent of a release, evaluation of site characteristics, and the identification, development, and implementation of an appropriate corrective measure or measures to protect human health and environment.

Corrective Action Management Unit – An area within a facility that is designated by the Department and is used only for managing remediation wastes for implementing corrective action or cleanup at the facility.

Engineering Controls – Physical barriers or other types of physical controls that are structures or natural or man-made systems that prevent exposure and/or the migration of chemicals of concern to the point of exposure. Examples include caps, slurry walls, sheet piling, hydraulic containment wells, and interceptor trenches.

Environmental Media – All medium of the environment, i.e., soil (surface and subsurface, sediment, ground water, surface water, and air.

Exposure Pathway – The course a chemical takes from a source to an exposed organism. An exposure pathway describes a unique mechanism by which an individual or population is exposed to chemical or physical agents at or originating from a site. Each exposure pathway includes a source or release from a source, an exposure point, and an exposure route. If the exposure point differs from the source, a transport/exposure medium (e.g., air) or media also is included.

Facility – All contiguous land, and structures, other appurtenances on the land, used for treating, storing, or disposing of hazardous waste. All contiguous property under the control of the owner or operator.

Field Screening – Test methods that are employed in the field to qualitatively check for the presence or absence of contamination, which aid in delineating the extent of contamination and may reduce the number of laboratory analyzed samples that may need to be collected.

Final Cleanup Levels - Facility-specific chemical concentrations in the affected media that a final remedy should achieve.

Generator – Any person, by site, whose act or process produces RCRA hazardous waste identified or listed in the Colorado Hazardous Waste Regulations or whose act first causes a hazardous waste to become subject to regulation.

Hazard Quotient – The ratio of the exposure of a single hazardous substance over a specified time period to a reference dose for that hazardous substance derived for a similar exposure period.

Hazardous Constituents – A constituent that caused the department to list the hazardous waste in Part 261, Subpart D of the Colorado Hazardous Waste Regulations, or a constituent listed in Table 1 of Section 261.24 of those same regulations.

Hazardous Substance - For the purposes of this guidance, a hazardous substance is defined as 1) any hazardous substance as defined under section 101(4) of the Comprehensive Environmental Response, Compensation, and Liability Act of 1980 (P.L. 96-510); 2) any material that meets the definition of a hazardous waste or hazardous waste constituent, as defined in 6 CCR 1007-3 and 40 CFR; 3) radioactive materials, and; 4) petroleum products including crude oil or any fraction thereof, natural gas, natural gas liquids, liquefied natural gas, or synthetic gas usable for fuel (or mixtures of natural gas and synthetic gas).

Hazardous Waste – A hazardous waste as defined in Part 261 of the Colorado Hazardous Waste Regulations, 6 CCR 1007-3.

Industrial Land use - Any real property designated or in use for facilities where the primary purpose of the endeavors conducted on the site is the manufacturing of commodities. Such facilities might include power generation facilities, foundries, machine shops and the like. Workers would spend approximately an average of 8 to 9 hours per day at such sites and be the primary individuals on any site.

Interim Measure – Remedial actions that can be undertaken by a facility or administrative authority to prevent or mitigate exposure from a release. Generally, interim measures are implemented before formal evaluation is complete and after sufficient information is available to indicate that unacceptable risks and hazards are present.

Innovative Technology – Newly invented processes that have been tested and used as treatments for hazardous waste or other contaminated materials, but still lacks enough information about their cost and how well they work to predict their performance under a variety of operating conditions.

Institutional Controls – Restrictions imposed on land use to render exposure pathways incomplete, typically to prevent human exposure to contamination. These restrictions may include structure-use restrictions, land-use restrictions, natural resource-use restrictions, well restriction areas, deed restrictions, deed notices, declaration of environmental restrictions, access controls, monitoring requirements, site posting requirements, information distribution, restrictive covenants, and federal/state,/county/local registries.

Iterative Process – Implementation of the various activities or phases of corrective action in a repeating manner, sometimes with successive or overlapping process elements and time frames. Corrective action should be made more efficient using this more flexible, performance-based approach by virtue of combining or eliminating certain activities. For example, an area of contamination is fully characterized

using a decision tree which governs where and how many samples are collected based on earlier test results, thereby accelerating the investigation and eliminating the need for preparing multiple phased work plans and reports so characteristic of the traditional approach.

Land Disposal Restrictions – Part 268 of the Colorado Hazardous Waste Regulations that identifies hazardous wastes that are restricted from land disposal and defines those limiting circumstances under which an otherwise prohibited waste may continue to be land disposed.

Long-term Management - Long-term corrective measure decisions that determine the degree and extent of cleanup necessary to protect human health and the environment into the distant future.

Maximum Contaminant Levels – Under Section 141 of the Safe Drinking Water Act, as amended, the maximum permissible level of a contaminant in water delivered to any user of a public water supply. MCLs reflect health factors and the technical and economic feasibility of recovering contaminants from a water supply.

Non-restricted Use – Cleanup to levels that would allow the facility owner/operator to "walk away" from the site following closure that would provide the greatest amount of protection to all prospective users or residents. To achieve this, the residual contamination should be 1) at or below background levels or 2) at concentrations that does not pose a risk to human health and the environment assuming a residential exposure scenario, and/or 3) protective of ground water quality.

Operator – The person operating a hazardous waste management facility or site either by contract or permit.

Owner – The person who owns a facility or part of a facility.

Performance Evaluation Monitoring – The collection and evaluation of monitoring data to document that a corrective measure, whether interim or final, is operating as it was designed, is adequate to remediate the contamination and that the cleanup goals will be achieved.

Performance Standard – Broad remediation objectives, either interim or final, that include a combination of general cleanup activities and/or the achievement of specific numeric standards that determine the direction of the cleanup effort.

Presumptive Remedy - Preferred, practical remedial alternatives for common categories of sites which have been successfully used at other cleanups, and which can adequately address the situation once the release has been investigated.

Principal Threat Wastes – Source materials considered to be highly toxic, highly bioaccumulative or highly mobile that generally cannot be reliably contained or would represent a significant risk to human health or the environment should exposure occur.

RCRA – Resource Conservation Recovery Act, the federal statute and implementing regulations that govern the generation and subsequent management of hazardous waste. These same regulatory requirements are contained within the Colorado Hazardous Waste Act and the Colorado Hazardous Waste Regulations (6 CCR 1007-3).

Remediation - The act of implementing, operating and maintaining an action taken to rectify the effects of a release of hazardous substances, so that it does not cause significant risk to present or future public health or welfare, or the environment.

Remediation Waste – All solid and hazardous wastes, and all media (including ground water, surface water, soils, and sediments) and debris that contain listed hazardous wastes or that themselves exhibit a hazardous waste characteristic and are managed for implementing cleanup.

Representative Sample – Samples that accurately quantify the physical and/or chemical characteristics of the material being tested.

Residential Land use - Any real property that is used for habitation by individuals or properties where more sensitive populations, such as children or the elderly, have the opportunity for exposure to contaminants. For the purposes of this policy, soil remediation objectives calculated using a residential exposure scenario are also protective of educational facilities, health care facilities, childcare facilities, and playgrounds.

Restricted Use – If a corrective action does not meet the conditions necessary for the facility owner/operator to "walk away" from the site (i.e., background or some other cleanup standard that is protective of a residential exposure scenario and ground water quality), then future use restrictions will be required. Future use restrictions should be based on the corrective action remedy and may take the form of institutional controls and/or engineering controls.

Risk Additivity - The process for assessing potential health effects of simultaneous exposure to more than one chemical. For carcinogens, a joint probability of an individual developing cancer (the incremental individual lifetime cancer risk) is assessed by summing all chemical-specific cancer risks together. For non-carcinogens, dose additivity is assumed for all chemicals that induce the same toxicological effect by the same mechanism of action.

Risk Assessment - The characterization of the potential adverse health effects of human exposures to environmental hazards. Risk assessment is a structured method consisting of an organized assembly of information on toxicity (i.e., potential adverse health effects of chemicals) and exposure (i.e., contact of an organism with a chemical) of individuals at or near a hazardous substance site or potential future receptors to such site. Risk assessment is based on the current level of understanding about the site characteristics, potential exposures, and health effects information.

Risk Management – Actions taken to reduce an unacceptable impact at points of exposure.

Screening Risk Limits – A risk-based performance standard that is calculated and used to discriminate between those releases that pose a significant threat to human health and the environment, and which may require a short term response, from those releases that pose less of a threat and can be addressed with a long-term remedial action or may be withdrawn from further evaluation.

Short-term Management – Corrective measures that are designed to quickly respond to more immediate threats posed by a situation or release, while a long-term comprehensive remedy is under development.

Solid Waste Management Unit – Any discernible unit at which solid wastes have been placed at any time, irrespective of whether the unit was intended for the management of solid or hazardous waste. Such units may include any area at a facility at which solid wastes have been routinely and systematically released.

State Ground Water Standards – Water quality standards as established in the "Basic Standards for Ground water", Regulation no. 41 (5 CCR 1002-41).

Temporary Unit – A unit used for the storage or treatment of hazardous wastes that originate during corrective action activities at a facility.

TSD Facility – A location at which RCRA hazardous waste is subjected to treatment, storage, or disposal and may include a facility where hazardous waste is generated.

Variable Oversight – Management of all activities related to corrective action at a site that is based on facility-specific conditions and owner/operator capabilities. The variable oversight approach encourages the project manager and owner/operator to develop a plan that allows for the appropriate level of oversight that will ensure timely, efficient, and protective cleanups.

CORRECTIVE ACTION GUIDANCE REFERENCE LIST

The following list comprises some of the guidance documents and other information sources that may be useful in implementing RCRA Corrective Action. Note: this should not be considered a final list but should be routinely updated as new resources are identified or made available. The references are listed in chronological order and not in order of usefulness.

Site Investigation

Characterization of Hazardous Waste Sites - A Methods Manual, Volume 1 - Site Investigations, EPA/600/4-84/075; 1985.

Practical Guide for Ground-Water Sampling. EPA/600/2-85/104, September 1985.

RCRA Corrective Action Plan, OSWER Directive 9902.3, November 14, 1986.

Guidance for Conducting RI/FS Under CERCLA, Interim Final, EPA/540/G-89/004; October 1988.

Interim Final, RCRA Facility Investigation (RFI) Guidance Documents, Volumes I-IV EPA 530/SW-89-031; May 1989.

Draft-Practical Guide for Assessing and Remediating Contaminated Sites. U.S. Environmental Protection Agency, Office of Solid Waste, Waste Management Division, May 1989.

Remedial Investigation: Site Characterization and Treatability Studies, EPA Directive 9355.3-01/FS2; 1989.

Corrective Action for Solid Waste Management Units at Hazardous Waste Management Facilities; Proposed Rule, Federal Register, vol. 55, p. 30798, July 27, 1990.

Seminar Publication: Site Characterization for Subsurface Remediations, EPA 625/4-91/026; 1991.

Dense Nonaqueous Phase Liquids -- A Workshop Summary EPA/600/R-92/030; February 1992.

Characterizing Heterogeneous Wastes: Methods and Recommendations EPA/600/R-92/033; February 1992.

Subsurface Characterization and Monitoring Techniques, A Desk Reference Guide, Volume 1: Soil and Ground water (Appendices A and B) and Volume 2: The Vadose Zone, Field Screening and Analytical Methods (Appendices C and D) EPA/625/R-93/003 a and b; May 1993.

RCRA Corrective Action Plan EPA/520-R-94-004; May 1994.

Corrective Action for Releases From Solid Waste Management Facilities; Advanced Notice of Proposed Rulemaking (ANPR) Federal Register, vol. 61, no. 85, pp. 19432-19464; May 1, 1996.

Ground Water

Manual of Ground-Water Sampling Procedures, Scalf, Marion; McNabb, James; Dunlap, William; Cosby, Roger; and Fryberger, John. NWWA/EPA Series, 1981.

A Guide to the Selection of Materials for Monitoring Well Construction and Ground-Water Sampling, SWS Contract Report 327, Illinois State Water Survey, Department of Energy and Natural Resources, Champaign, Illinois, August 1983.

RCRA Ground-Water Monitoring Technical Enforcement Guidance Document, OSWER Directive 9950.1; September 1986.

Handbook-Ground water, EPA/625/6-87/016, March 1987.

Office of Waste Programs Enforcement, Operational and Maintenance Inspection Guide: RCRA Ground-Water Monitoring Systems, OSWER Directive 9950-3; March 1988.

Guidance on Remedial Actions for Contaminated Ground Water at Superfund Sites, OSWER Directive 9283.1-2; December 1988.

Statistical Analysis of Ground-Water Monitoring Data at RCRA Facilities, Interim Final, EPA/530/SW-89/026; April 1989.

Handbook of Suggested Practices for the Design and Installation of Ground-Water Monitoring Wells EPA/600/4-89/034; April 1989.

Handbook of Suggested Practices for the Design and Installation of Ground-Water Monitoring Wells, EPA/600/4-89/034; October 1989.

Basics of Pump-and-Treat Ground-Water Remediation Technology EPA/600/8-90/003; March 1990.

Ground water, Volume 1: Ground water and Contamination. EPA/625/6-90/016a and b; September 1990.

Handbook of RCRA Ground-Water Monitoring Constituents: Chemical and Physical Properties EPA/530/R-92/022; September 1992.

RCRA Ground Water Monitoring Draft Technical Guidance, EPA/530-R-93-001; November 1992.

Guidance for Evaluating the Technical Impracticability of Ground Water Restoration EPA/540-R-93-080; September 1993.

Methods for Monitoring Pump-and-Treat Performance EPA/600/R-94/123; 1994.

Analytical / Sampling

Interim Guidelines and Specifications for Preparing Quality Assurance Project Plans QAMS-005/80; December 1980.

Characterization of Hazardous Waste Sites - A Methods Manual: Volume II. Available Sampling Methods, Second Edition, EPA/600/4-84/076; December 1984.

Characterization of Hazardous Waste Sites-A Methods Manual, Volume 1: Site Investigations. EPA/600/4-84/075; April 1985.

Chemical, Physical and Biological Properties of Compounds Present at Hazardous Waste Sites, EPA/OWPE, September 1985.

A Compendium of Superfund Field Operations Methods, EPA/540/P-87/001 a and b; 1987.

Data Quality Objectives for Remedial Response Activities EPA/540/G-87/003 & 004; March 1987.

User's Guide to the Contract Laboratory Program, OSWER Directive 9240.0-1; December 1988.

Soil Sampling Quality Assurance User's Guide, Second Edition. EPA/600/8-89/046; March 1989.

Transport and Fate of Contaminants in the Subsurface. EPA/625/4-89/019; September 1989.

Compendium of ERT Soil Sampling and Surface Geophysics Procedures, EPA 540/P-91/006; 1991.

Preparation of Soil Sampling Protocols: Sampling Techniques and Strategies, EPA 600/R-92/128; 1992.

Test Methods for Evaluating Solid Waste, Physical/Chemical Methods and Final Update, Third Edition, November 1986, and July 1992 update.

Soil Gas Sensing for Detection and Mapping of Volatile Organics. By Dale A. Devitt, Roy B. Evans, William A. Jury, and Thomas H. Starks, of the Environmental Research Center, Las Vegas, NV; U.S. Environmental Protection Agency, Environmental Monitoring Systems Laboratory, Office of Research and Development, Las Vegas, NV.
Guidance for Data Quality Assessment EPA/600/R-96/084; July 1996.

EPA Requirements for Quality Assurance Project Plans for Environmental Data Operations EPAQA/R-5; October 1997. /540/R-96/023, PB96-96-3508; 1996.

ASTM Standards Related to the Phase II Environmental Site Assessment Process; ASTM Stock #: Phase 2; 1998

Remediation

Slurry Trench Construction for Pollution Migration Control EPA/540/2-84-001; February 1984.

Corrective Measures for Releases to Ground Water From SWMUs Draft Final EPA/530-SW-88-020; March 1985

Corrective Measures for Releases to Soil From SWMUs Draft Final EPA/530-SW-88-022; March 1985

RCRA Corrective Action Interim Measures Guidance, Interim Final, EPA/530-SW-88-029; June 1988.

Technology Screening Guide for Treatment of CERCLA Soils and Sludges, EPA/540/2-88/004; September 1988.

Guide for Conducting Treatability Studies under CERCLA, Interim Final, EPA/540/2-89/058; 1989.

Stabilization/Solidification for CERCLA and RCRA Wastes, EPA/625/6-89/022; May 1989.

Technical Guidance Document: Final Covers on Hazardous Waste Landfills and Surface Impoundments, EPA/530-SW-87/047; July 1989.

Handbook on In-Situ Treatment of Hazardous Waste Contaminated Soils EPA/540/2-90/002; January 1990.

Basics of Pump-and-Treat Ground water Remediation Technology EPA/600/8-90/003; March 1990

Selected Alternative and Innovative Technologies for Corrective Action Site Remediation EPA/540/8-91/092; 1991.

Guide for Conducting Treatability Studies under CERCLA: Aerobic Biodegradation Remedy Screening, EPA/540/2-91/013B; July 1991.

Handbook: Stabilization Technologies for RCRA Corrective Actions, EPA/625/6-91/026; August 1991.

Guide for Conducting Treatability Studies under CERCLA: Soil Vapor Extraction, EPA/540/2-91/019B; September 1991.

Guide for Conducting Treatability Studies under CERCLA: Soil Washing, EPA/540/2-91/020B; September 1991.

A Guide to Principal Threats and Low Level Threat Wastes Superfund Publication 9380,3-06FS; November 1991

Selected Alternative and Innovative Treatment Technologies for Corrective Action and Site Remediation, EPA/540/8-91/092; 1991.

Guide for Conducting Treatability Studies under CERCLA: Chemical Dehalogenation, EPA/540/R-92/013B; 1992.

RCRA Corrective Action Stabilization Technologies Proceedings EPA/625/R-92/014; October 1992.

Seminar on Technologies for Remediating Sites Contaminated with Explosive and Radioactive Wastes EPAORD and DoD; EPA/625/K-93/001; June 1993.

Final Rule, Corrective Action Management Units and Temporary Units, Corrective Action Provisions under Subtitle C Federal Register, vol. 58, no. 29, pp. 8657-8685; February 16, 1993.

Guidance for Evaluating the Technical Impracticability of Ground water Restoration EPA/540-R-93-080; September 1993.

In-Situ Remediation Technology Status Report: Surfactant Enhancements OSWER (EPA 542-K-94-003), April 1995.
Land Use in the CERCLA Remedy Selection Process OSWER Directive No. 9355.7-04; May 25, 1995.

In-Situ Remediation Technology Status Report: Cosolvents OSWER (EPA 542-K-94-006); April 1995.

Bioremediation of Hazardous Wastes: Research, Development, and Field Evaluations; EPA/540/R-95/532; September 1995.

Use of the Area of Contamination (AOC) Concept During RCRA Cleanups Memorandum From Michael Shapiro, EPA-OSW to RCRA Branch Chiefs and CERCLA Regional Managers, March 13, 1996.

Standards Applicable to Owners and Operators of Closed and Closing Hazardous Waste Management Facilities: Post-Closure Permit Requirement and Closure Process Final Rule Federal Register, vol. 63, p. 59710; 1998.

Use of Monitored Natural Attenuation at Superfund, RCRA Corrective Action and Underground Storage Tank Sites OSWER Policy Directive 9200, 4-17P; April 1999.

Presumptive Remedies

Presumptive Remedies: Policy and Procedures EPA/540/F-93-047; PB93-963345; 1993.

Presumptive Remedies: Site Characterization and Technology Selection for CERCLA Sites With Volatile Organic Compounds in Soils EPA/540/F-93-048; PB95-963346; 1993.

Presumptive Remedies: For Soils, Sediments, and Sludges at Wood Treater Sites EPA/540/R-95-128; PB95-963410;1995.

Presumptive Remedies: CERCLA Landfill Caps RI/FS Data Collection Guide EPA 540/F-95/000; PB95-963412; 1995.

Presumptive Response Strategy and Ex-Situ Treatment Technologies for Contaminated Ground water at CERCLA Sites EPA

Risk Assessment

Superfund Public Health Evaluation Manual, EPA/5401-89-060, OSWER Directive 9285.4-1; October 1986.

Alternate Concentration Limit Guidance EPA/530-SW-87017; 1987.

Risk Assessment Guidance for Superfund, Volume I: Human Health Evaluation Manual (Part A), Interim Final, EPA/540/1-89/002; December 1989.

Risk Assessment Guidance for Superfund, Volume II: Environmental Evaluation Manual, Interim Final, EPA/540/1-89/001; March 1989.

Ecological Assessment of Hazardous Waste Sites: A Field and Laboratory Reference Document, EPA/600/3-89/013; March 1989.

Superfund Program; Part 1. Public Health Risk Assessment and Part 2. Ecological Risk Assessment EPA 901/5/89-001; June 1989.

Quantifying Effect in Ecological Site Assessments: Biological and Statistical Considerations EPA/600/D-90/152; 1990.

Human Health Evaluation Manual, Supplemental Guidance: Standard Default Exposure Factors, OSWER Directive 9285.6-03; March 25, 1991.

Exposure Factors Handbook EPA/600/8-89/043); July 1989.

Guidance for Data Usability for Risk Assessment, Interim Final EPA/540/G-90/008; October 1990.

Risk Assessment Guidance for Superfund. Volume I: Human Health Evaluation Manual Supplemental Guidance "Standard Default Exposure Factors" Interim Final. Office of Solid Waste and Emergency Response. OSWER Directive 9285.6-03; March 25, 1991.

Ecological Assessment of Superfund Sites: An Overview. US EPA Office of Solid Waste and Emergency Response. Volume I, Number 2. (9345.0-05I); December 1991.

Risk Assessment Guidance for Superfund: Volume I - Human Health Evaluation Manual (Part B, Development of Risk-based Preliminary Remediation Goals). Interim. Office of Emergency and Remedial Response. 9285.7-01B; December 1991.

Dermal Exposure Assessment: Principals and Applications (Interim Report). EPA 600/8-91/011B; January 1992.

Framework for Ecological Risk Assessment. EPA/630/R-92/001; February 1992.

Guidance for Data Usability for Risk Assessment, Part A. Prepared by Office of Emergency and Remedial Response. Publication 9285.7-09A; April 1992.

Developing A Work Scope for Ecological Assessments. US EPA Office of Solid Waste and Emergency Response. Volume I, Number 4. Publication 9345.0-05I0; May 1992.

Guidelines for Exposure Assessment. Federal Register, vol. 57, pp. 22888-22938; May 29, 1992.

Interim Final Policy and Guidance on Risk Assessments fro Corrective Action at RCRA Facilities, Colorado Department of Public Health and Environment; 1993.

ECO Update. Using Toxicity Tests in Ecological Risk Assessment. Office of Solid Waste and Emergency Response. Volume II, Number 1. (EPA 540-F-94-012); September 1994.

ECO Update. Catalogue of Standard Toxicity Tests for Ecological Risk Assessment. Office of Solid Waste and Emergency Response. Volume II, Number 2. (EPA 540-F-94-013); September 1994.

ECO Update. Field Studies for Ecological Risk Assessment. Office of Solid Waste and Emergency Response. Volume II, Number 3. (EPA 540-F-94-014); September 1994.

ECO Update. Selecting and Using Reference Information in Superfund Ecological Risk Assessments. Office of Solid Waste and Emergency Response. Volume II, Number 4. (EPA 540-F-94-050); September 1994.

Draft Proposed Guidelines for Ecological Risk Assessment. U.S. Environmental Protection Agency Risk Assessment Forum. EPA/630/R-95/002; October 1995.

ECO Update, Ecological Significance and Selection of Candidate Assessment Endpoints. U.S. Environmental Protection Agency Office of Solid Waste and Emergency Response. (9345.0-11 FSI); January 1996.

.Soil Screening Guidance, EPA/540/R-96/018; 1996.

.Soil Screening Guidance: Technical Background Document, EPA/540/R-95/128; 1996.

Environmental Protection Agency. 40 CFR Ch. 1. Corrective Action for Releases from Solid Waste Management Units at Hazardous Waste Management Facilities; Proposed Rule. Federal Register, vol. 61, no. 85; May 1, 1996.

Proposed Guidelines for Ecological Risk Assessment. Federal Register, vol. 61, no. 175, pp. 5605-5609; September 9, 1996.

Human Health-Based Water Quality Criteria and Standards, Water Quality Control Commission Policy 96-2; May 1996

Exposure Factors Handbook, EPA/600/8-89/043; 1996.

Proposed Soil Remediation Objectives Policy Colorado Department of Public Health and the Environment; December 1997.

OTHER SOURCES OF SITE CHARACTERIZATION AND REMEDIATION INFORMATION

The following is a short list of useful Internet links from which corrective action news, information and guidance documents may be located and downloaded.

http://www.epa.gov/tio/
The mission of the EPA's Technology Innovation Office (TIO) is to advocate more effective, less costly approaches to assess and clean up contaminated waste sites, soil, and groundwater. TIO provides robust technology and market information and works to remove policy and institutional impediments related to the deployment of these technologies.

http://clu-in.org/
EPA's Technology Office of Innovation provides information about innovative treatment and site characterization technologies while acting as a forum for all waste remediation stakeholders.

http://www.epa.gov/ebtpages/cleanup.html
EPA's Browse Topics Cleanup Web site.

http://www.epareachit.org/index3.html
EPA REACH IT is a system that lets environmental professionals use the Internet to search, view, download, and print information about innovative remediation and characterization technologies.

http://www.epa.gov/correctiveaction/
EPA's RCRA Corrective Action Web site.

http://www.epa.gov/ORD/SITE/
The EPA's Superfund Innovative Technology Evaluation (SITE) Demonstration Program encourages the development and implementation of (1) innovative treatment technologies for hazardous waste site remediation and (2) monitoring and measurement. Reports are prepared that evaluate all available information on the technology and analyze its overall applicability to other site characteristics, waste types, and waste matrices. Testing procedures, performance and cost data, and quality assurance and quality standards are also provided.

http://www.epa.gov/superfund/resources/
The EPA's Resources Center provides you with Superfund-related information resources.

http://www.epa.gov/epaoswer/hazwaste/test/sw846.htm
SW-846 functions primarily as a guidance document setting forth acceptable methods for the regulated and regulatory communities to use in responding to RCRA-related sampling and analysis requirements.

http://www.itrcweb.org/common/default.asp
ITRC is a state-led coalition working together with industry and stakeholders to broaden and deepen technical knowledge and streamline the regulation of new environmental technologies, thereby making them easier to use. ITRC accomplishes its mission in two ways: it develops guidance documents and training courses to meet the needs of both regulators and environmental consultants, and it works with state representatives to ensure that ITRC products and services have maximum impact among state environmental agencies and technology users.

http://www.itrcweb.org/common/content.asp?en=NA210537&sea=Yes&set=Both&sca=Yes&sct=Long
List of currently available ITRC guidance documents.

http://www.colorado.gov/cdphe/hm
The Colorado Department of Public Health and Environment, Hazardous Materials and Waste Management Division's Web site where news releases, publications and regulations may be found.

APPENDIX 1 CORRECTIVE ACTION PROCESS CHECKLISTS

The following series of checklists were developed to assist the regulated community in understanding what information is needed to evaluate the adequacy of site investigation and remediation activities occurring at a site or facility. These checklists should be used as a guide; not all information listed is appropriate for every site, and some sites will require additional information not noted in the checklists.

I. GENERAL SITE INFORMATION	Page
A. Name(s) and address(es) of the owner and operator of the facility	
B. Contact person and phone number for the facility	
C. Location of the facility including the address and legal description of the site	
D. EPA Identification Number for the facility	
E. Brief description of the type and source of contamination	
F. Description of the current land uses and zoning restrictions of the subject property and the areas contiguous to the site	
G. List of permits obtained from state or federal agencies required as a result of activities conducted at the site	
H. List of any enforcement orders or orders on consent issued in the past regarding the operations at the facility or other releases	

II. IDENTIFICATION OF CHEMICAL USAGE AND POTENTIAL AND KNOWN SOURCES OF CONTAMINATION	Page
A. Detailed description of the operational history of the property, including the most current use of the property	
B. Description of all businesses/activities that occupy or occupied the site as far back as record/knowledge allows	
C. Description of operations which may have resulted in the release of hazardous substances or petroleum products at the site, both past and present, including the dates these activities occurred at the property, and dates during which contaminants were released into the environment	
D. List of site specific notifications made as a result of any management activities of hazardous substances conducted at the site, including any and all EPA identification numbers obtained for management of hazardous substances at the site from either the Department or EPA	
E. List of notifications to county emergency response personnel for the storage of reportable quantities of hazardous substances required under Emergency Planning and community Right-to-know statutes	
F. List of notifications made to state and/or federal agencies regarding reporting of spills and/or accidental releases	
G. List of known hazardous substances currently or previously used at the site, with volume estimates	
H. Discussion of the types of operations in which those chemicals were used	
I. List of wastes generated by current and historical activities conducted at the site	
J. Discussion on how and where the chemicals were stored, both before and after they were used	

III. SITE SETTING	Page
A. Description of the physical characteristics of the site, including a map to scale, and an accompanying narrative showing and describing the following:	
- property boundaries	
- surface topography	
- on-site buildings and what is performed in them	
- nearby off-site buildings, if relevant to the situation	
- waterways, wetlands, floodplains, surface water bodies, drainage patterns, and surface water containment areas	
- surrounding land uses	
- location of sensitive populations (schools, homes for the elderly, hospitals, eco-systems, etc.)	
- nearby ground water monitoring and private/municipal supply wells	
- surface and subsurface structures	
- utility lines, both above and below ground	
- sewer lines	
- underground or above ground piping	
- above or below ground storage tanks	
- truck loading docks	
- railroad tracks and rail car loading areas	
- process/manufacturing areas	
- pollution control devices (e.g., air emission control scrubber units)	
- water cooling systems or refrigeration units	
- product and waste storage areas	
- chemical and/or fuel transfer and pumping stations	
- spill collection sumps and/or drainage collection areas	
- french drain system, location and discharge points	
- other process lines or conveyance systems (e.g., floor trenches)	
- wastewater treatment units	
- wastewater discharge points	
- surface impoundments	
- leach fields	
- dry wells or waste disposal sumps	
- waste storage and/or disposal areas, pits, landfills, both permanent and temporary	
B. If ground water contamination exists or the release has the **potential to impact** ground water, the facility should provide the following information:	
- state engineers office listing of all wells within one half mile radius of the site, together with a map to scale showing the locations of these wells	
- documentation of due diligence in verifying the presence or absence of unregistered wells supplying ground waste for domestic use, when the potential for such wells is deemed likely, as in older residential neighborhoods or in rural areas	
- a statement about each well within the half-mile radius of the site, stating whether the well is used as a water supply, irrigation, or ground water monitoring well	
- lithologic logs for all on-site wells; copies of field log notes may be appropriate	
- well construction diagrams for all on-site wells showing screened intervals, casing type, and construction details including gravel pack interval, bentonite seal thickness, and cemented interval	
- discussion of the regional and facility-specific geologic formations and lithology affecting ground water flow beneath the facility	

III. SITE SETTING	Page
- depth to ground water and thickness of the saturated interval(s)	
- thickness and aerial extent of the aquifer(s)	
- interpretation of hydraulic interconnections between saturated zones	
- water level contour maps for regional and facility specific ground water flow patterns including rate(s) of ground water movement	
- description of man-made influences that may affect the hydrogeology of the site such as water supply/production wells, pipelines, ditches, french drains, unlined ponds, septic tanks, NPDES outfalls, etc.	
- description of any known or suspected geologic features that may influence the direction and rate of contaminant migration, including such things as bedrock paleochannels, the presence of more permeable geologic units, bedding planes, fractures, etc.	
- areas and amounts of ground water recharge and discharge	
- hydraulic characteristics of the impacted aquifers	
- discussion of hydraulic tests performed at the site to characterize the hydrogeologic properties of any aquifers on-site and in the area	
- analysis of any topographic features that might affect the ground water flow system	
- pertinent ground water quality information near the facility	
- description of the current and proposed use of on-site and surrounding off-site ground water in sufficient detail to evaluate human health and environmental risk pathways as well as a discussion of any state and/or locals laws that restrict the use of on-site ground water	

IV. SAMPLING AND ANALYSIS PLAN	Page
A. rationale for the selection of sampling locations, parameters, and methodology	
B. details of well construction	
C. well lithologic logs	
D. description of sample locations	
E. description of sampling procedures	
F. description of decontamination procedures for sampling equipment	
G. description of sample preservation techniques	
H. description of proper packing and shipping procedures	
I. sample quality assurance/quality control procedures	
J. health and safety procedures for protection of sampling workers	
K. rationale for each analytical and test method selected for each sampled media	
L. method detection limits	
M. identify quality assurance/quality control procedures for analytical methods used	

V. CONTAMINANT LOCATION AND EXPOSURE PATHWAYS	Page
A. Description of the nature and extent of any contamination and releases of hazardous wastes which have occurred at the site, including but not limited to:	
- identification of the nature, magnitude and extent, both on-site and off-site, of contamination that has been released into soil, ground water, surface water and/or the air at the property for each of the known or suspected source areas identified	
- table or list of site contaminants indicating which media are contaminated and the estimated vertical and aerial extent of contamination in each medium	
- table or list of site contaminants, indicating the maximum concentrations of each contaminant detected on-site where the contaminant was discharged to the environment and/or where the worst effects of the discharge are believed to exist	

V. CONTAMINANT LOCATION AND EXPOSURE PATHWAYS	Page
- discussion of physical and chemical characteristics of the contaminants, including, among other things, their physical state, mobility, solubility, vapor pressure and any other properties that would enhance or restrict contaminant migration through the environment. For those contaminants that are determined to be mobile and have the potential to migrate and contaminate the underlying ground water resources, the applicant should also evaluate the leachability of the contaminants. If deemed necessary, the results of indoor air investigations to evaluate impacts due to volatile organic compounds should also be presented	
- list and map defining all source areas, areas of contamination or contaminant discharge areas, including estimated volumes and concentrations of substances discharged at each area	
B. Description of the sampling methodology employed to characterize the nature and extent of the release, including but not limited to:	
- discussion of how environmental samples were collected, including rationale involved in sampling locations, parameters, and methodology	
- a description of the sampling equipment and methods used to collect representative samples to define the release	
- sample handling and analytical methods used to collect representative samples to define the release	
- copies of reports and/or correspondence which detail environmental conditions in all affected media at the site, including analytical laboratory reports for all samples and analyses	
- description of screening values to be used to determine full extent of contamination, based on unrestricted land use	
C. Identification and evaluation of exposure pathways, including but not limited to:	
- description and list of known existing and/or potential human and/or environmental exposure pathways pertinent to the current and potential future use of the property	
- list of ecological receptors of concern and an evaluation of potential pathways	
D. A discussion and listing of any applicable standards/guidance (federal, state, or other) establishing acceptable cleanup levels for contaminants in the affected media	

VI. INTERIM MEASURES	Page
A. Evaluate need for and appropriateness of interim measure(s)	
B. If deemed necessary, a description of the interim measure and what it is intended to accomplish	
C. The criteria that will be used to determine whether or not the interim measure was successful in accomplishing its intended purpose	
D. Identification of milestones to be met during the course of implementing the interim measure	
E. A schedule of implementation	
F. Reporting of the progress implementing the interim measure and achievement of the performance goal	

VII. PREPARATION OF THE CORRECTIVE MEASURES WORK PLAN	Page
A. detailed description of the remediation alternative or alternatives selected which will be used to remove or stabilize contamination released into the environment, or threatened to be released into the environment	
- an explanation as to why the selected alternative is best suited for remediating the contamination under the existing conditions at the facility	

VII. PREPARATION OF THE CORRECTIVE MEASURES WORK PLAN	Page
- documentation supporting the success of the selected remedy cleaning up similar types of contamination at this or other sites, particularly if an innovative remedial alternative is proposed	
- remediation system design diagrams showing how the system will be constructed in the field	
- map identifying areas to be remediated, the area where the remediation system will be located if it differs from the contaminated areas, the locations of confirmation samples, the locations of monitoring wells, areas where contaminated media will be temporarily be stored, and areas where contamination will not be actively remediated	
B. description of the cleanup objectives and identification of all applicable standards, both established by the State or risk-based, that the proposed remedy is intended to achieve.	
C. using the information contained in the site assessment, a risk based analysis of all exposure pathways which details how the proposed remediation will obtain acceptable risk levels, showing that the corrective actions proposed will attain an acceptable risk or permanently break pathways	
D. if a pilot test is necessary to support the final selection and/or design of a preferred remedial alternative, include a pilot test work plan and schedule of implementation that results in the preparation of a report that documents the outcome of the test	
E. if a pilot test was conducted to support the final selection and/or design of a preferred remedial alternative, include the results of the pilot test	
F. identification of all permits that will be required for the successful construction and operation of the remediation system (water discharge permit, underground injection control permit, etc.)	
F. a Performance Evaluation / Compliance Monitoring plan describing the sampling program that will be used to verify the successful operation of the corrective measure and that treatment of the contaminated media has resulted in attainment of the proposed cleanup goals	
G. remediation system operation and maintenance plan that describes, at a minimum, how the system will be operated to ensure that it functions as designed without interruptions and a sampling program that will be used to monitor its effectiveness in achieving the desired goal	
H. a contingency plan in the event the preferred remedy fails to achieve the desired cleanup goals, including the criteria that will be used to decide when it should be implemented	
I. a plan meeting the level of community interest in, and concerns about, the corrective action and facility	
J a schedule of implementation, including the date the corrective measures work action plan becomes effective, dates key activities will be completed or milestones will be achieved by, and the date a completion report will be submitted to the Department	

VIII. CORRECTIVE ACTION REMEDY IMPLEMENTATION SCHEDULE (PHASED APPROACH)	Page
A. potential pilot test activities	
- submittal of the pilot test work plan	
- pilot test implementation schedule	
- submittal of the pilot test report	
B. corrective action design	
- submittal of the conceptual design	
- submittal of the intermediate design	

VIII. CORRECTIVE ACTION REMEDY IMPLEMENTATION SCHEDULE (PHASED APPROACH)	Page
- submittal of the final design	
C. design associated plans and requirements	
- submittal of the operation and maintenance plan	
- submittal of the effectiveness monitoring plan	
D. submittal of the operation and maintenance reports	
E. submittal of the no further action request	

IX. PERFORMANCE EVALUATION AND COMPLIANCE MONITORING PLAN	Page
A. brief description of the project and remedy being implemented	
B. objectives to be achieved by the proposed remedy and the criteria that will be used to judge the success or failure following its construction and operation	
- the rate at which contaminant concentrations will decline in the affected media should be specified	
- known system performance standards and their anticipated completion dates, based on past experience or their design, should be presented	
- anticipated degradation products should be identified and monitored for	
B. The number, location and frequency of samples to be collected should be specified, along with the justification for their selection	
- list of sampling points, including points of compliance	
- types of samples to be taken and analyses to be performed	
- sample analytical parameters and methods, including detection limits, per Department-approved methods and guidance	
- schedule of sampling events	
- review and modification cycle	
- conditions necessary to change the monitoring plan	
C. description of the quality controls that will be applied to the data collected	
D. the mechanism that will be used to evaluate system performance should be specified	
E. specify the length of time during which the performance of the system will be evaluated and compliance monitoring will continue	
F. milestones should be established, identifying when system performance will be critically evaluated and a decision made as to whether it should continue operating, whether its performance should in some way be enhanced or if it should be replaced with an entirely different remediation system	
G. conditions necessary to demonstrate remedy completion	
H. periodic reporting of the data and the results of the performance evaluation	

X. OPERATIONS AND MAINTENANCE PLAN (Primarily for remediation systems requiring long-term operation)	Page
A. a description of the project, including monitoring equipment, treatment systems, and collection systems as appropriate	
B. a description of normal operation and maintenance including a description of tasks for operations, description of tasks for maintenance, description of operation conditions, description of all inspections, and a schedule of each operations and maintenance task	
C. a description of potential operation problems including sources of information regarding problems and common and/or anticipated remedies	
D. a description of the project management approach including levels of authority and responsibility (including organizational chart), lines of communication and the	

X. OPERATIONS AND MAINTENANCE PLAN (Primarily for remediation systems requiring long-term operation)	Page
qualifications of key personnel who will operate and maintain the corrective measures system (including contractor personnel)	
E. a description of the training process for operations and maintenance personnel	
F. a description of contractor requirements for providing appropriate service visits by experienced personnel to supervise the installation, adjustment, startup and operation of the treatment system, and training covering appropriate operational procedures once the startup has been successfully accomplished	
G. a schedule for equipment and installed components replacement	
H. a description of the wastes generated by operation of the corrective measure and how they will be managed	
I. a Quality Assurance Project Plan documenting all monitoring procedures, sampling, field measurements and sample analyses performed to ensure the effective operation and maintenance of the corrective measure	
J. a description of the procedures to be used to address system breakdowns and operational problems including a list of redundant and emergency backup equipment and procedures:	
- alternate procedures to be implemented if the corrective measure suffers complete failure; alternate procedures must be able to prevent release or threatened releases of hazardous wastes or constituents which may endanger human health or the environment or exceed media cleanup standards	
- oral notification to the Department within 24 hours of the event with written follow-up notification within 72 hours of the event; must specify what happened, what response action is/was being taken and/or is planned, and any potential impacts on human health or the environment	
- procedures to be implemented in the event that the corrective measure is experiencing major operational problems, is not performing to design specifications and/or will not achieve the cleanup goals in the expected time-frame; may include both a primary corrective measure and a secondary corrective measure to be implemented if the primary corrective measure failed	
K. preparation of signed semi-annual status reports that must be submitted to the Department by the last day of the month following the end of the reporting period during the operations and maintenance phase of corrective actions, reporting such things as:	
- out of compliance situations and corrective actions taken	
- maintenance performed	
- operating and treatment efficiency	
- the number of days performance standards were not met	
- problems resolved	
- any personnel changes	

XI. NOTICE OF COMPLETION REPORT	Page
The completion report is used to demonstrate that the remediation was completed according to the approved corrective measures work plan and that the established cleanup goals have been achieved. The following items should be included in the completion report:	
A. a description of the residual contamination that may be left behind upon completion of the remedy	
- a final list of all site contaminants, along with the remaining concentrations	
- a brief description of the remedy implemented, focusing primarily on any deviations from the original plan	

XI. NOTICE OF COMPLETION REPORT	Page
- a final list describing which media were not actively remediated and the estimated vertical and aerial extent of contamination remaining in each medium	
- a final list and map defining all source areas, areas of contamination or contaminant discharge areas	
- a description of any long term monitoring plans and engineering or institutional controls used with a description of the mechanisms in place to assure the controls remain as designed	
B. for sites that involve soil contamination remediation by excavation, the following information should be provided:	
- results of confirmatory soil sampling	
- explanation of the sampling method in the narrative as well as any modifications to the confirmatory sampling recommended above	
- if contamination is to be left in place, additional samples should be collected from the area of the worst contamination, as verified visually or with a field sampling device	
- sample locations	
- availability of waste disposal manifests	
C. for sites that involve in-situ soil remediation, the following information should be provided:	
- completion of a minimum of two soil borings, with at least one completed in the area identified in the site assessment as the area of highest contamination; for larger areas of contamination, additional borings and sampling may be required	
- completion of the borings should employ a field screening device and borings should be logged	
- soil sample submitted for analysis from each boring should be the sample closest to or in the contaminated source area	
D. for sites that involve ground water remediation, the following information should be provided:	
- field testing should include aquifer and contaminant characteristics such as gradient, partition coefficients, original and residual contaminant levels, etc.	
- a map showing ground water flow direction, depth to ground water, and sampling locations at each regular monitoring event	
- tabular presentation of data collected	
E. summary of field activities, remedial activities, and any deviations from the original corrective action plan	
F. pertinent figures and drawings of the remedial system as built	
G. conclusions made after all remedial activities are completed	

APPENDIX 2 CONTAINED-OUT DETERMINATION PROCEDURE FOR ENVIRONMENTAL MEDIA CONTAMINATED WITH RCRA HAZARDOUS WASTE

1.0 Purpose

This Contained-out Determination Procedure is intended to clarify the application of RCRA hazardous waste regulations to environmental media. Cleanup at RCRA facilities may involve the management of significant amounts of contaminated media, particularly soil and ground water. Under the EPA "contained-out" policy, media that contain listed hazardous wastes or exhibit a hazardous waste characteristic generally are subject to the same management standards as newly generated hazardous waste, including treatment, storage, and disposal facility (TSDF) standards and Land Disposal Restriction (LDR) requirements. These strict management standards sometimes do not correspond to the level of risk posed by environmental media, which is often contaminated with relatively small amounts of hazardous wastes. The purpose of this Contained-out Determination Procedure is to facilitate the management of such media and to encourage remediation of contaminated sites in Colorado.

This procedure does not establish cleanup criteria. The "Proposed Soil Remediation Objectives Policy Document" December 1997 (SRO Policy) identifies several options for establishing cleanup levels for media remaining in the ground. The Contained-out Determination Procedure defines the concentration below which environmental media contaminated with listed hazardous waste may be managed as something other than a hazardous waste. Note that this procedure applies to contaminated environmental media managed only in Colorado because other state waste management regulations may not recognize Colorado's contained-out determinations.

2.0 Background

Environmental media includes soil, ground water, surface water, and sediments. Environmental media are subject to RCRA Subtitle C only if they contain listed hazardous waste and/or exhibit a characteristic of hazardous waste. Contaminated environmental media containing hazardous waste are subject to all applicable hazardous waste requirements until it can be demonstrated that they no longer contain hazardous waste. The Department considers contaminated media to no longer contain hazardous waste when they no longer exhibit a characteristic of hazardous waste, when concentrations of hazardous constituents from listed hazardous wastes are below health-based and ground water protective levels, and all Land Disposal Restriction requirements are satisfied (if applicable). The determination that any given volume of contaminated media does not contain hazardous waste is called a "Contained-out" Determination. Contained-out determinations may be made before or after treatment of the contaminated environmental media.

3.0 Contained-Out Determination Criteria

The Department has developed criteria upon which contained-out determinations for environmental media contaminated with hazardous waste can be made. These criteria are presented in Table A2-1. To be deemed nonhazardous, the media must meet the applicable "exit" criteria specified in Table A2-1 for both characteristically hazardous waste and listed hazardous waste. The exit levels for media contaminated with a listed hazardous waste are based on the proposed management of the waste: (1) unrestricted use, and (2) restricted use. Use of Table A2-1 is explained in more detail below.

3.1 Contained-Out Determination Criteria for Environmental Media That Exhibit a Characteristic of Hazardous Waste

In the case of media that exhibit only a characteristic of hazardous waste, once the characteristic is eliminated (e.g., through treatment), the media are no longer considered to "contain" hazardous waste. The media is nonhazardous if it does not exhibit a hazardous characteristic (ignitable, corrosive, reactive, or toxic) as defined in the Colorado Hazardous Waste Regulations (6 Code of Colorado Regulations 1007-3) Part 261, Subpart C. This determination can be made through relatively straightforward analytical testing. For the toxicity characteristic, the media is nonhazardous if the extract from a representative sample of the media does not exceed the levels in the hazardous waste regulations Section 261.24, Table 1 - Maximum Concentration of Contaminant for the Toxicity Characteristic, using the Toxicity Characteristic Leaching Procedure (TCLP). Although the contaminated media may no longer exhibit the characteristic of a hazardous waste, it still must be managed as a solid waste, unless the residual concentrations are at or below a level that pose no risk to human health and the environment based in an unrestricted use exposure scenario (unrestricted use contained-out determination, Option I of Table A2-1).

3.2 Contained-Out Determination Procedure for Environmental Media Contaminated With Listed Hazardous Waste

3.2.1 Contained-Out: Unrestricted Use

Table A2-1 (Option I) lists the contained-out criteria that must be met in order for environmental media contaminated with hazardous waste to be rendered nonhazardous and which are then considered suitable for unrestricted use. Environmental media contaminated with a listed waste is no longer considered hazardous waste ("contained-out") if contaminant concentrations are at or below levels that pose no risk to human health (direct exposure health-based concentration calculated using a residential/unrestricted land use scenario) and the environment (generally, protection of ground water). Determinations made under this category are based on cleanup levels established in Table 1 of the Proposed Soil Remediation Objectives (SRO) Policy (for those constituents in SRO Policy Table 1), or EPA's Region IX Preliminary Remediation Goal Table (only for those constituents presently not in Table 1 of the SRO Policy). The Proposed Soil Remediation Objectives Policy lists generic soil cleanup values for Tier 2 sites (Table 1 in the SRO Policy) that are protective of both ground water quality and direct exposure under several land use settings. These values are based on conservative assumptions and are applicable to relatively small and simple sites that do not require site-specific risk assessments. The Region IX Preliminary Remediation Goal Table lists similar protective soil and water concentrations for a much larger number of chemicals. These tables and the State of Colorado Ground water Standards are used as the comparison criteria for soil/sediments and ground water/surface water, respectively, for contained-out determinations where the media will be considered suitable for unrestricted use. This determination can only be used for sites that meet the Tier 2 assumptions as defined in the Proposed Soil Remediation Objectives Policy. Contained-out determinations for more complex sites that do not meet the Tier 2 assumptions (e.g., where there are surface water impacts, adjacent property impacts, sensitive environments, areas of contamination greater than 100 square meters, etc.) may involve additional evaluation or calculation of site-specific objectives, and will require Department approval.

Using Table A2-1, environmental media no longer contain hazardous waste and are not subject to RCRA regulatory management requirements and are suitable for unrestricted use if they have been generated with, or treated to, contaminant levels:

- below those in Table A2-1, Option I; <u>and</u>
- below characteristic levels; <u>and</u>

- meeting all LDR requirements (if applicable, see Section 4).

Media that satisfy these exit criteria may be managed on-site as nonhazardous waste or disposed off-site. Soil may be used as site backfill, or alternatively, it can be sent off-site for use as landfill cover or disposed at landfills that do not have a liner or leachate collection system. Water may be poured on the ground at or near the point of generation. Discharges to surface water or drainages must be avoided because of the potential applicability of more stringent aquatic life water quality standards. In addition, surface water discharge could require a permit from the Water Quality Control Division.

It is important to note that, in order to be adequately protective for unrestricted use, this determination involves an evaluation for *all* site-related hazardous constituents that might be present in the media, not just the underlying constituents for which the contaminating waste was originally listed. The list of analytes to consider should be based on site-specific knowledge and/or previously collected data. If this information is limited or nonexistent, then the analyte suite should be designed conservatively (to be more complete), potentially including the majority or all of the Colorado hazardous waste regulations Part 261 Appendix VIII hazardous constituents. It is recommended that for the initial contained-out determination that will be made for a site, the analytical suite be reviewed and pre-approved by the Department, as well as the contained-out determination results themselves, prior to subsequent management of the media.

3.2.2 Contained-Out: Restricted Use

The criteria underlying contained-out determinations made under this category are based on how the contaminated media will be managed off-site. Media deemed "contained-out" under this category must be managed in accordance with the guidelines and protocols specified in the Solid Waste Act. Media "contained-out" under Table A2-1 (Option II) will require disposal at a Subtitle D solid waste disposal facility that is permitted/licensed, is suitably lined, has a leachate collection system, and will be capped, maintained, and monitored upon closure, thereby minimizing or eliminating future releases to the environment, or in the case of ground water, disposal in a publicly owned treatment works (POTW), subject to pretreatment discharge limits.

The formulas used in Table A2-1 (Option II) include the use of human health-based and ground water protective look-up values from Table 1 of the Proposed Soil Remediation Objectives Policy for soil or EPA's Region IX Preliminary Remediation Goal Table and the use of the State Ground water Standards for water. Using Table A2-1, environmental media do not contain hazardous waste and are not subject to RCRA regulatory management requirements if they will be disposed in a Subtitle D landfill or publicly owned treatment works (POTW), and they have been generated with, or treated to, contaminant levels:

- below those in Table A2-1, Option II; <u>and</u>
- below characteristic levels; <u>and</u>
- meeting all LDR requirements (if applicable, see Section 4).

Note that the Option II evaluation must consider, at a minimum, each constituent in the media for which the contaminating hazardous waste was listed, constituents that are reasonably expected to be present in the contaminated media, and any possible breakdown products or impurities. Historical and process knowledge of how the hazardous waste constituents were originally produced must be applied. When the presence of listed hazardous waste cannot be reasonably established, the Contained-out Determination Procedure, Table A2-1 (Option II), does not apply and the media can only be hazardous if they exhibit a characteristic of hazardous waste. If the media are not characteristically hazardous, then the media may be disposed off-site at a Subtitle D facility or further evaluated under Table A2-1 (Option I) to determine whether they may be disposed on-site.

4.0 Land Disposal Restrictions

Application of the Land Disposal Restrictions (LDRs) to contaminated environmental media must also be considered if the media will ultimately be land disposed. A flowchart that illustrates when LDRs apply to environmental media is presented in Flowchart A2-1. In general:

- if the contained-out determination indicates that the media are a hazardous waste when first generated, then LDRs apply;
- if the contained-out determination indicates that the media are not a hazardous waste when first generated, then LDRs don't apply. An exception to this is the case where media are contaminated with listed hazardous waste when the hazardous waste was land disposed *after* the effective date of the applicable LDR treatment standard (i.e., illegal land disposal). In this case, even though the contained-out determination indicates that the media do not contain hazardous waste, the media are still subject to LDRs because the LDRs had already attached to the contaminating hazardous waste. A list of the effective dates of the applicable LDR treatment standard may be found in Table 1 of Appendix VII in Part 268 of the Colorado Hazardous Waste Regulations, a copy of which is included as Attachment 1 at the end of this appendix.

LDRs attach only to prohibited hazardous waste (including hazardous waste contained in environmental media) when it is (1) generated, and (2) subsequently placed in a land disposal unit. Therefore, if contaminated environmental media are not removed from the land (i.e., "generated") LDRs do not apply. Similarly, if contaminated environmental media are removed from the land (i.e., "generated") yet never placed in a land disposal unit (e.g., they are legitimately recycled), LDRs do not apply.

Once LDRs attach, the LDR treatment standards continue to apply until they are met. That means that if the media are treated so that they no longer contain hazardous waste, the media must still meet LDR treatment standards for all of the regulated hazardous constituents and any other constituents listed in the Section 268.48 Table UTS that are reasonably expected to be present in the contaminated media, prior to land disposal. Additional information regarding LDRs can be found in Part 268 of the Colorado Hazardous Waste Regulations and in Appendix 3 of this guidance document.

Flowchart A2-2 of this Appendix illustrates the process for determining whether the LDRs apply to a contaminated soil, and if so, what the treatment requirements are. In general, the LDR treatment standard for soil requires that there be a 90 percent reduction in total constituent concentration (Section 268.49(c)(1)(i)), except in cases where the treatment would result in a concentration less than 10 times the Universal Treatment Standard (see the Section 268.48 Table UTS, reproduced as Attachment A2-2 in this Appendix). For liquids (e.g., purge water), the Table UTS wastewater standard must be met before it can be land disposed.

Please note that treatment of hazardous waste may require a permit and/or be subject to management standards depending on the type of treatment and the contaminant being treated. Please see the "Treatment of Hazardous Waste by Generators" guidance document, April 2000, for additional information.

5.0 Examples

Use of Table A2-1 to obtain contained-out determinations is demonstrated by the following three hypothetical examples.

<u>EXAMPLE 1</u>
A Denver manufacturing facility is involved in the cleanup of a site where trichloroethylene (TCE) spent solvent contamination is present in soil and ground water as a result of past operations. The facility is

proposing excavation and direct disposal of the soil at a Subtitle D landfill and disposal of recovered ground water to the local publicly owned treatment works (POTW). The facility is seeking a contained-out determination for the TCE contaminated soil and ground water so that it can be managed as nonhazardous waste. Representative soil samples submitted for volatile organic carbon (VOC) analysis contained 15 mg/kg TCE. Using Table A2-1 (Option II), the following calculations are derived:

SOIL CRITERIA
Nonhazardous if below A and either B1 or B2:

A. 100 x 2.99 mg/kg = 299 mg/kg

AND (choose one of the following):

B1. Limit from 6 CCR 1007-3 Section 261.24 Toxicity Characteristic Leaching Procedure (TCLP) Table = 0.5 mg/L (TCLP) or 10 mg/kg (total constituent analysis)[1]
B2. NA (not applicable since TCE is on the toxicity characteristic (TC) list)

The TCE concentration in the soil sample, 15 mg/kg, is less than the A value of 299 mg/kg. For the second part of the criteria, the facility will have calculated a value of 10 mg/kg using method B1. Since the TCE concentration in the sample, 15 mg/kg, exceeds 10 mg/kg, the soil is not "contained-out" and must be managed as a listed hazardous waste.

The result, 10 mg/kg, is the minimum total concentration which must be present in the soil if it is to exceed the TC Limit; since the soil sample contained 15 mg/kg TCE, it would theoretically[1] exceed the TC Limit of 0.5 mg/L. Alternatively, the facility could have opted to analyze the sample using the TCLP method (EPA Method 1311) directly and compared the resultant leachate concentration with the TC Limit. This may be advantageous at sites where the soil is high in clay and total organic carbon content and actual leachate concentrations may be less than theoretical values predicted using the mass analysis rule of thumb.

GROUND WATER CRITERIA

The TCE concentration in the water sample is 450 ug/L, which exceeds the Colorado Ground water Standards of 5 ug/L, respectively. Therefore, the ground water does not meet the exit levels established in Table A2-1 (Option I) and may not be managed on-site (i.e., disposed on the ground). For the sake of this example, let us assume that the Denver Metro POTW does currently have pretreatment standards established for TCE. If this is the case and this waste stream meets all their acceptance criteria, the ground water is "contained-out" under Option II and may be disposed as a nonhazardous waste in the POTW.

TREATMENT OPTIONS

In this example where the soil contains a listed hazardous waste because of the TCE concentration (15 mg/kg versus the 10 mg/kg "contained out" target), the facility has the option of treating the soil on-site in accordance with the generator treatment requirements of the Colorado Hazardous Waste Regulations (6 CCR 1007-3 Section 100.21(d)). Knowledge of when the release occurred shows that the hazardous

[1] For option B1, the facility may use the total constituent analysis as a screen for the TCLP analysis. Using the equation in Note 8 of Table A2-1 and assuming 100% solid:

TCC = (19 x 0.5 mg/L x 100/100 + 0.5mg/L) x L/kg = 10 mg/kg

waste constituents were disposed of into the environment after the effective date of the applicable LDR treatment standard. Since the soil is considered to be a hazardous waste, treatment would have to achieve the alternative LDR treatment standards for contaminated soil (Section 268.49 of the regulations). This treatment standard requires that there be a 90 percent reduction in total constituent concentration (Section 268.49(c)(1)(i)), except in cases where the treatment would result in a concentration less than 10 times the Universal Treatment Standard (UTS, 6.0 mg/kg for TCE).

In this example, the measured concentration is below the 10 times UTS limit (6.0 mg/kg x 10 = 60.0 mg/kg, versus 15.0 mg/kg measured), therefore treatment is not required to satisfy LDRs. However, treatment is still necessary to satisfy the requirement under this contained-out determination that the soil should be below characteristic levels (0.5 mg/L, or approximately 10.0 mg/kg total constituent concentration using the equation in Note 8 of Table A2-1). Using readily available treatment options, the facility may reduce the TCE concentration in soil such that it is below 10 mg/kg and may be managed as a solid waste in accordance with Option II of Table A2-1. It may also be possible to reduce TCE concentrations even further, perhaps to the point of satisfying the Option I criteria for unrestricted use, in which case the soil may be redeposited on-site.

The same could have been done for the ground water if under Table A2-1 it was determined to be a hazardous waste (for example, the Denver Metro POTW refused to accept this wastewater). Under this scenario, the water could have been treated (air stripping or filtered through activated carbon) to reduce concentrations that would either meet the POTW acceptance criteria (Option II) or allow it to be discharged onto the ground (Option I).

EXAMPLE 2

A wood treatment facility is involved in the assessment of a site where soil contamination is present as a result of contamination with F034 listed waste. Investigation-derived waste consisting of drill cuttings has been generated at the site. A representative soil sample was submitted for volatile organic carbons (VOCs), semi-volatile organic carbons (SVOCs), and total metals analysis. Detected concentrations included 20 mg/kg arsenic, 45 mg/kg naphthalene, and 2.0 mg/kg TCE. The percent solids content is 85. A comparison of all site-related hazardous constituents to the Table A2-1 (Option I) criteria indicate that the arsenic, naphthalene, and TCE concentrations exceed these criteria and the soil is therefore not contained-out under Option I. Using Option II, at a minimum, the concentration of each constituent for which the contaminating hazardous waste was listed must be compared to the soil criteria for this category. The listing constituents for F034 listed waste (see Part 261 Appendix VII of Part 261 in the Colorado Hazardous Waste Regulations) that were present in the soil sample include arsenic and naphthalene. The origin of the TCE is unknown and is not required to be evaluated under Option II (however, the facility may elect to evaluate it under Option II as a more conservative approach). However, it must still be demonstrated that the soil does not exhibit the characteristic of toxicity for TCE. Using Table A2-1 (Option II), the following calculations are derived for the arsenic and naphthalene:

Nonhazardous if below A and either B1 or B2:

Arsenic:

A. 100 x 0.21 mg/kg = 21 mg/kg

AND (choose one of the following):

B1. Limit from TC Table = 5 mg/L

B2. NA (not applicable since arsenic is on the TCLP list)

Naphthalene:
A. 100 x 289.1 mg/kg = 28,910 mg/kg

AND (choose one of the following):

B1. NA (naphthalene not on TCLP List)
B2. 100 x 0.006 mg/L = 0.6 mg/L

The arsenic concentration in the soil sample, 20 mg/kg, is less than the A value of 21 mg/kg. For the second part of the criteria, the facility must choose option B1 since arsenic is a metal on the TCLP list. The facility submits the sample for TCLP metals analysis and obtains a result of 1.0 mg/L, which is less than the TCLP Limit of 5 mg/L. Because the soil sample concentration is below both the A and selected B values, the soil is "contained-out" for arsenic.

The naphthalene concentration in the soil sample, 45 mg/kg, is less than the A value of 28,910 mg/kg. For the second part of the criteria, the facility chooses B2. To calculate what concentration in soil is necessary to generate a leaching extract of 0.6 mg/L, the facility first uses the total constituent analysis as a screen for the TCLP analysis using the equation in Note 8 of Table A2-1:

TCC = (19 x 0.6 mg/L x 0.85 + 0.6 mg/L) X 1L/kg
TCC = 10.3 mg/kg

Assuming that all the naphthalene is mobile, more than 10.3 mg/kg of this constituent must be present in the soil before it even has the potential to fail this criteria. This is less than the 45 mg/kg measured in a sample collected from the site, suggesting that the soil has the potential to mobilize and form a leachate. However, a TCLP analysis showed that the leach extract contained naphthalene at a concentration less than 0.6 mg/L. This difference between the theoretical and actual leaching potential is believed to be the result of a) properties of the soil that limit the mobility of naphthalene and b) the chemical characteristics of this constituent that also limits its mobility, neither of which is factored into the relative simple total constituent calculation. Based on the leaching test, the soil is "contained-out" for this constituent as well.

Finally, to evaluate whether the soil exhibits the toxicity characteristic for TCE, the facility uses the total constituent analysis as a screen for the TCLP analysis using the equation in Note 8 of Table A2-1:

TCC = (19 x 0.5 mg/L x 0.85 + 0.5 mg/L) X 1L/kg
TCC = 8.575 mg/kg

To exceed the TCLP Limit for TCE of 0.5 mg/L, the sample must contain at least 8.575 mg/kg of TCE. Since the sample contained only 2.0 mg/kg, it could not possibly exceed the TCLP Limit. Therefore, the soil does not exhibit the toxicity characteristic for TCE.

Since the soil was "contained-out" for arsenic and naphthalene under Option II, and it does not exhibit a hazardous characteristic, the soil is deemed nonhazardous for purpose of disposal in a Subtitle D landfill facility.

The example above was based on not having to comply with the LDRs because the release occurred before the effective date of the applicable LDR treatment standards. The applicable LDR treatment standard would need to be complied with if the site historical information showed that the release of these hazardous constituents occurred after the effective date of the treatment standards. However, the end result would be the same in this particular example. The TCLP test result for arsenic showed that this constituent did not exceed the 5.0 mg/L Universal Treatment Standard and therefore the LDR

requirements had been met. The measured concentration of naphthalene is greater than the Universal Treatment Standard (5.6 mg/kg), suggesting that the LDRs need to be complied with. However, the measured concentration is less than 10 times the Universal Treatment Standard for that constituent and therefore treatment is not required and the LDRs have been satisfied (see Section 238.49(c)(1)(iii) of the Colorado Hazardous Waste Regulations). The TCE concentration of 2.0 mg/kg is less than the 6.0 mg/kg Universal Treatment Standard, and once again the LDRs have been met.

EXAMPLE 3

Drummed drill cuttings from a site undergoing investigation are sampled and are found to contain the following constituents at their respective concentrations: PCE at 0.065 mg/kg, 1,1-DCE at 0.008 mg/kg, and TCE at 0.089 mg/kg. Since the soil was gathered from wells around a waste oil tank that was also used to dispose of these listed solvents, this medium is also heavily contaminated with oil and grease. A comparison with Table 1 of the Proposed Soil Remediation Objectives Policy Document shows that the chlorinated constituents were measured at levels that pose minimal risk to human health and the environment because the concentrations are a) below those that are acceptable for direct human exposure and b) below those that are protective of ground water quality. The measured levels are also below the applicable Universal Treatments Standards, and therefore the facility needn't comply with the LDRs prior to disposal.

The hazardous constituents in the soil meet Table A2-1, Option 1 criteria. The soil is therefore determined to be nonhazardous. Based on this determination, the facility decides to dispose of the drill cuttings at a solid waste disposal facility because of the elevated levels of oil and grease present in the soil.

Table A2-1 Contained-Out Determination Procedure for Environmental Media Contaminated With RCRA Hazardous Waste[1]

PROPOSED MANAGEMENT OF MEDIA	CONTAMINANT	SOIL/SEDIMENT CRITERIA	WATER CRITERIA
All Management Scenarios (must be managed in compliance with Subtitle D requirements, unless the levels meet the Option I criteria below)	Characteristically Hazardous Waste "D codes" See CHWR 261 Subpart C	Nonhazardous if media does not exhibit a hazardous characteristic (ignitable, corrosive, reactive, or toxic [below levels in TC Table[5] using TCLP Test Method 1311])	Nonhazardous if the water does not exhibit a hazardous characteristic (ignitable, corrosive, reactive, or toxic [below levels in TC Table[5] using TCLP Test Method 1311])
Option I: Unrestricted Use	Listed Hazardous Waste "F,K,P,U codes" See CHWR 261 Subpart D *All* Site-Related Hazardous Constituents	Nonhazardous for unrestricted use if media concentrations are less than or equal to: A. Direct exposure health-based concentration calculated using a Residential/Unrestricted Land use scenario[2,3] AND B. A soil concentration protective of ground water[2,4]	Nonhazardous for unrestricted use if the concentrations in water are less than or equal to State Ground water Standard[7] or other health-based drinking water standard.
Option II: Restricted Use (limited to disposal in Subtitle D landfill or POTW only)	Listed Hazardous Waste "F,K,P,U codes" See CHWR 261 Subpart D Each Constituent for which the Hazardous Waste was Listed and Any Possible Breakdown Products or Impurities (See CHWR 261, Appendix VII to identify constituents for which "F" and "K" wastes are listed)	Nonhazardous for restricted use, if media concentrations are less than or equal to A **and** either B1 or B2: A. 100 x direct exposure health-based concentration calculated using a Residential/Unrestricted Land use scenario[2,3] AND Choose **one** of the following: B1. Limit from TC Table[4,6] (only for chemicals on the TC List) B2. 100 x State Drinking/Ground Water Standard[7] or other health-based drinking water standard[6] (only for chemicals not on the TC List)	Nonhazardous for restricted use if the concentrations in water are less than or equal to the POTW pretreatment standard, or if it meets the POTW's acceptance criteria.

NOTES FOR TABLE A2-1:

CHWR Colorado Hazardous Waste Regulations
TCLP Toxicity Characteristic Leachate Procedure
TC Toxicity Characteristic
POTW Publicly Owned Treatment Works

[1] All contained-out determinations made using this table assume that the Land Disposal Restrictions have been complied with, if applicable, prior to any land disposal. See Section 4.0 of this appendix.

[2] From either Table 1 of the Proposed Soil Remediation Objectives (SRO) Policy Document, December 1997, (or any updated version of this document), or EPA's Region IX Preliminary Remediation Goal Table (only for those constituents presently not in Table 1 of the SRO Policy Document). Check EPA Region IX's web site for the current preliminary remediation goal concentrations (http://www.epa.gov.Region9/waste/sfund/prg/index.htm).

[3] By total constituent analysis.

[4] By total constituent analysis. For those inorganics in Table 1 of the Proposed Soil Remediation Objectives Policy, use TCLP (Test Method 1311) analysis or the TCLP substitution method as described in Note 8 of this table.

[5] Per CHWR 261.24, Table 1, Maximum Concentration of Contaminants for the Toxicity Characteristic.

[6] By TCLP, Test Method 1311 analysis. Total constituent analysis may substitute for an actual TCLP analysis using the formula described in Note 8 of this table.

[7] Per the Colorado Department of Public Health - Water Quality Control Commission – "The Basic Standards for Ground water" 41.0 (5 CCR 1002-41).

[8] A total constituent analysis that has been adjusted for percent wet solids may be substituted for an actual TCLP analysis using the following formula (Conrad and Deever, 1992):

$$TCC = (19 \times LIM \times \frac{\%WS}{100} + LIM) \times C \quad \text{where:}$$

TCC = total constituent concentration, mg/kg
LIM = regulatory TCLP Limit for compound of interest, mg/L
%WS = percent wet solids
C = conversion factor to change concentration in mg/L to weight fraction, one L/kg of extract

See examples in Section 5.0 of the text that demonstrate the use of this formula.

Flowchart A2-1: Contaminated Environmental Media – Do The LDRs Apply?

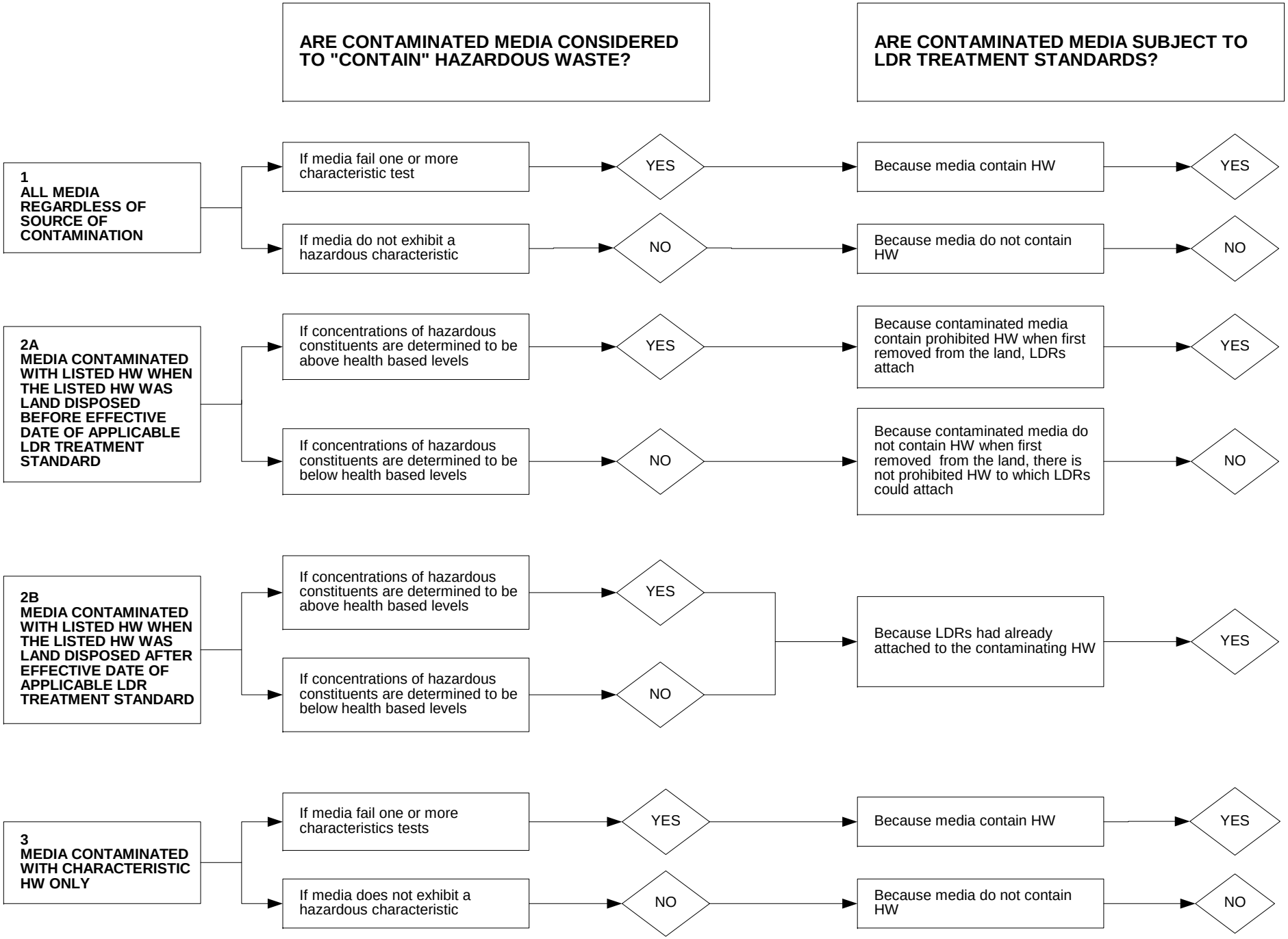

Flowchart A2-2 How The LDRs Apply To Soil Contaminated With Listed Hazardous Waste

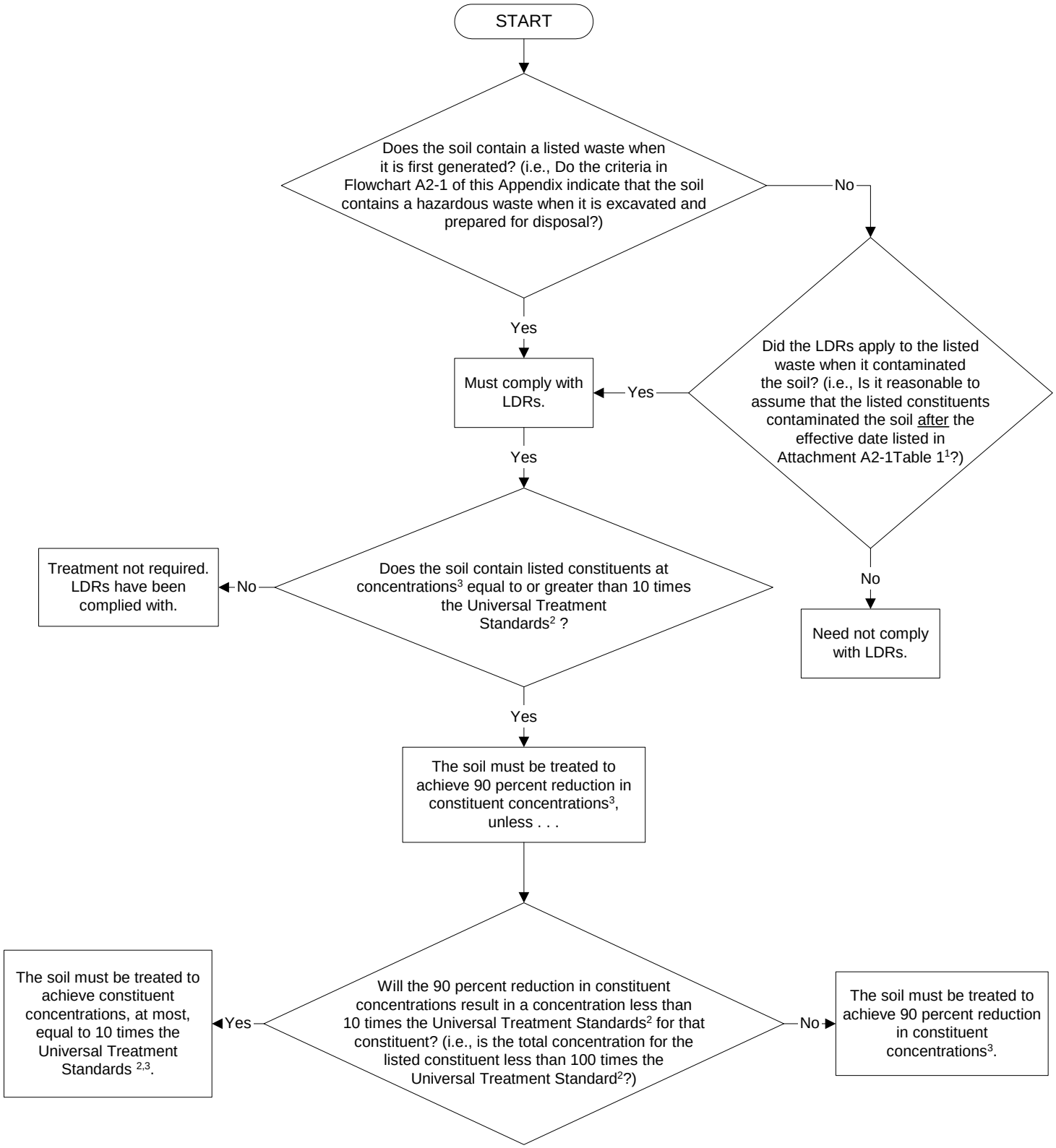

[1] Attachment A2-1 Table 1 effective dates of surface disposed wastes (non-soil and debris) regulated in the LDRs, Appendix VII of Part 268 of the Colorado Hazardous Waste Regulations 6 CCR 1007-3.
[2] Attachment A2-2 Table UTS of Section 268.48 of the Colorado Hazardous Waste Regulations 6 CCR 1007-3.
[3] For metals and carbon disulfide, cyclohexanone, and methanol, treatment must achieve 90 percent reduction in constituent concentrations as measured in leachate from the treated media (tested according to TCLP) or 90 percent reduction in constituent concentrations (when a metal removal treatment technology is used).

Attachment A2-1 Effective Dates of Surface Disposed Wastes (Non-Soil and Debris) Regulated in the LDRs - Comprehensive List

[6 CCR 1007-3 Part 268] Appendix VII

Table 1. -- Effective Dates of Surface Disposed Wastes (Non-Soil and Debris) Regulated in the LDRs[a] - Comprehensive List

Waste code	Waste category	Effective date
D001[c]	All (except High TOC Ignitable Liquids)	Aug. 9, 1993.
D001	High TOC Ignitable Liquids	Aug. 8, 1990.
D002[c]	All	Aug. 9, 1993.
D003	Newly identified surface-disposed elemental phosphorus processing wastes.	May 26, 2000.
D004	Newly identified D004 and mineral processing wastes.	August 24, 1998.
D004	Mixed radioactive/newly identified D004 or mineral processing wastes.	May 26, 2000.
D005	Newly identified D005 and mineral processing wastes.	August 24, 1998.
D005	Mixed radioactive/newly identified D005 or mineral processing wastes.	May 26, 2000.
D006	Newly identified D006 and mineral processing wastes.	August 24, 1998.
D006	Mixed radioactive/newly identified D006 or mineral processing wastes.	May 26, 2000.
D007	Newly identified D007 and mineral processing wastes.	August 24, 1998.
D007	Mixed radioactive/newly identified D007 or mineral processing wastes.	May 26, 2000.
D008	Newly identified D008 and mineral processing wastes.	August 24, 1998.
D008	Mixed radioactive/newly identified D008 or mineral processing wastes.	May 26, 2000.
D009	Newly identified D009 and mineral processing wastes.	August 24, 1998.
D009	Mixed radioactive/newly identified D009 or mineral processing wastes.	May 26, 2000.
D010	Newly identified D010 and mineral processing wastes.	August 24, 1998.
D010	Mixed radioactive/newly identified D010 or mineral processing wastes.	May 26, 2000.
D011	Newly identified D011 and mineral processing wastes.	August 24, 1998.
D011	Mixed radioactive/newly identified D011 or mineral processing wastes.	May 26, 2000.
D012 (that exhibit the toxicity characteristic based on the TCLP)[d].	All	Dec. 14, 1994.
D013 (that exhibit the toxicity characteristi	All	Dec. 14, 1994.

Table 1. -- Effective Dates of Surface Disposed Wastes (Non-Soil and Debris) Regulated in the LDRs[a] - Comprehensive List

Waste code	Waste category	Effective date
c based on the TCLP)[d].		
D014 (that exhibit the toxicity characteristic based on the TCLP)[d].	All	Dec. 14, 1994.
D015 (that exhibit the toxicity characteristic based on the TCLP)[d].	All	Dec. 14, 1994.
D016 (that exhibit the toxicity characteristic based on the TCLP)[d].	All	Dec. 14, 1994.
D017 (that exhibit the toxicity characteristic based on the TCLP)[d].	All	Dec. 14, 1994.
D018	Mixed with radioactive wastes	Sep. 19, 1996.
D018	All others	Dec. 19, 1994.
D019	Mixed with radioactive wastes	Sep. 19, 1996.
D019	All others	Dec. 19, 1994.
D020	Mixed with radioactive wastes	Sep. 19, 1996.
D020	All others	Dec. 19, 1994.
D021	Mixed with radioactive wastes	Sep. 19, 1996.
D021	All others	Dec. 19, 1994.
D022	Mixed with radioactive wastes	Sep. 19, 1996.
D022	All others	Dec. 19, 1994.
D023	Mixed with radioactive wastes	Sep. 19, 1996.
D023	All others	Dec. 19, 1994.
D024	Mixed with radioactive wastes	Sep. 19, 1996.
D024	All others	Dec. 19, 1994.
D025	Mixed with radioactive wastes	Sep. 19, 1996.
D025	All others	Dec. 19, 1994.
D026	Mixed with radioactive wastes	Sep. 19, 1996.
D026	All others	Dec. 19, 1994.
D027	Mixed with radioactive wastes	Sep. 19, 1996.

Table 1. -- Effective Dates of Surface Disposed Wastes (Non-Soil and Debris) Regulated in the LDRs[a] - Comprehensive List

Waste code	Waste category	Effective date
D027	All others	Dec. 19, 1994.
D028	Mixed with radioactive wastes	Sep. 19, 1996.
D028	All others	Dec. 19, 1994.
D029	Mixed with radioactive wastes	Sep. 19, 1996.
D029	All others	Dec. 19, 1994.
D030	Mixed with radioactive wastes	Sep. 19, 1996.
D030	All others	Dec. 19, 1994.
D031	Mixed with radioactive wastes	Sep. 19, 1996.
D031	All others	Dec. 19, 1994.
D032	Mixed with radioactive wastes	Sep. 19, 1996.
D032	All others	Dec. 19, 1994.
D033	Mixed with radioactive wastes	Sep. 19, 1994.
D033	All others	Dec. 19, 1994.
D034	Mixed with radioactive wastes	Sep. 19, 1996.
D034	All others	Dec. 19, 1994.
D035	Mixed with radioactive wastes	Sep. 19, 1996.
D035	All others	Dec. 19, 1994.
D036	Mixed with radioactive wastes	Sep. 19, 1996.
D036	All others	Dec. 19, 1994.
D037	Mixed with radioactive wastes	Sep. 19, 1996.
D037	All others	Dec. 19, 1994.
D038	Mixed with radioactive wastes	Sep. 19, 1996.
D038	All others	Dec. 19, 1994.
D039	Mixed with radioactive wastes	Sep. 19, 1996.
D039	All others	Dec. 19, 1994.
D040	Mixed with radioactive wastes	Sep. 19, 1996.
D040	All others	Dec. 19, 1994.
D041	Mixed with radioactive wastes	Sep. 19, 1996.
D041	All others	Dec. 19, 1994.
D042	Mixed with radioactive wastes	Sep. 19, 1996.
D042	All others	Dec. 19, 1994.
D043	Mixed with radioactive wastes	Sep. 19, 1996.
D043	All others	Dec. 19, 1994.
F001	Small quantity generators, CERCLA response/RCRA corrective action, initial generator's solvent-water mixtures, solvent-containing sludges and solids	Nov. 8, 1988.

Table 1. -- Effective Dates of Surface Disposed Wastes (Non-Soil and Debris) Regulated in the LDRs[a] - Comprehensive List

Waste code	Waste category	Effective date
F001	All others	Nov. 8, 1986.
F002 (1,1,2-trichloro-ethane)	Wastewater and Nonwastewater	Aug. 8, 1990.
F002	Small quantity generators, CERCLA response/RCRA corrective action, initial generator's solvent-water mixtures, solvent-containing sludges and solids	Nov. 8, 1988.
F002	All others	Nov. 8, 1986.
F003	Small quantity generators, CERCLA response/RCRA corrective action, initial generator's solvent-water mixtures, solvent-containing sludges and solids	Nov. 8, 1988.
F003	All others	Nov. 8, 1986.
F004	Small quantity generators, CERCLA response/RCRA corrective action, initial generator's solvent-water mixtures, solvent-containing sludges and solids	Nov. 8, 1988.
F004	All others	Nov. 8, 1986.
F005 (benzene, 2-ethoxy ethanol, 2-nitropropane)	Wastewater and Nonwastewater	Aug. 8, 1990.
F005	Small quantity generators, CERCLA response/RCRA corrective action, initial generator's solvent-water mixtures, solvent-containing sludges and solids	Nov. 8, 1988.
F005	All others	Nov. 8, 1986.
F006	Wastewater	Aug. 8, 1990.
F006	Nonwastewater	Aug. 8, 1988.
F006 (cyanides)	Nonwastewater	July 8, 1989.
F007	All	July 8, 1989.
F008	All	July 8, 1989.
F009	All	July 8, 1989.
F010	All	June 8, 1989.
F011 (cyanides)	Nonwastewater	Dec. 8, 1989.
F011	All others	July 8, 1989.
F012 (cyanides)	Nonwastewater	Dec. 8, 1989.
F012	All others	July 8, 1989.
F019	All	Aug. 8, 1990.
F020	All	Nov. 8, 1988.
F021	All	Nov. 8, 1988.
F022	All	Nov. 8, 1988.

Table 1. -- Effective Dates of Surface Disposed Wastes (Non-Soil and Debris) Regulated in the LDRs[a] - Comprehensive List

Waste code	Waste category	Effective date
F023	All	Nov. 8, 1988.
F024 (metals)	Wastewater	June 8, 1989.
F024 (metals)	Nonwastewater	Aug. 8, 1990.
F024[b]	All others	June 8, 1989.
F025	All	Aug. 8, 1990.
F026	All	Nov. 8, 1988.
F027	All	Nov. 8, 1988.
F028	All	Nov. 8, 1988.
F032	Mixed with radioactive wastes	May 12, 1999.
F032	All others	August 12, 1997.
F034	Mixed with radioactive wastes	May 12, 1999.
F034	All others	August 12, 1997.
F035	Mixed with radioactive wastes	May 12, 1999.
F035	All others	August 12, 1997.
F037	Not generated from surface impoundment cleanouts or closures	June 30, 1993.
F037	Generated from surface impoundment cleanouts or closures	June 30, 1994.
F037	Mixed with radioactive wastes	June 30, 1994.
F038	Not generated from surface impoundment cleanouts or closures	June 30, 1993.
F038	Generated from surface impoundment cleanouts or closures	June 30, 1994.
F038	Mixed with radioactive wastes	June 30, 1994.
F039	Wastewater	Aug. 8, 1990.
F039	Nonwastewater	May 8, 1992.
K001 (organics)[b]	All	Aug. 8, 1988.
K001	All others	Aug. 8, 1988.
K002	All	Aug. 8, 1990.
K003	All	Aug. 8, 1990.
K004	Wastewater	Aug. 8, 1990.
K004[c]	Nonwastewater	Aug. 8, 1988.
K005	Wastewater	Aug. 8, 1990.
K005[c]	Nonwastewater	June 8, 1989.
K006	All	Aug. 8, 1990.
K007	Wastewater	Aug. 8, 1990.
K007[c]	Nonwastewater	June 8, 1989.

Table 1. -- Effective Dates of Surface Disposed Wastes (Non-Soil and Debris) Regulated in the LDRs[a] - Comprehensive List

Waste code	Waste category	Effective date
K008	Wastewater	Aug. 8, 1990.
K008[c]	Nonwastewater	Aug. 8, 1988.
K009	All	June 8, 1989.
K010	All	June 8, 1989.
K011	Wastewater	Aug. 8, 1990.
K011	Nonwastewater	June 8, 1989.
K013	Wastewater	Aug. 8, 1990.
K013	Nonwastewater	June 8, 1989.
K014	Wastewater	Aug. 8, 1990.
K014	Nonwastewater	June 8, 1989.
K015	Wastewater	Aug. 8, 1988.
K015	Nonwastewater	Aug. 8, 1990.
K016	All	Aug. 8, 1988.
K017	All	Aug. 8, 1990.
K018	All	Aug. 8, 1988.
K019	All	Aug. 8, 1988.
K020	All	Aug. 8, 1988.
K021	Wastewater	Aug. 8, 1990.
K021[c]	Nonwastewater	Aug. 8, 1988.
K022	Wastewater	Aug. 8, 1990.
K022	Nonwastewater	Aug. 8, 1988.
K023	All	June 8, 1989.
K024	All	Aug. 8, 1988.
K025	Wastewater	Aug. 8, 1990.
K025[c]	Nonwastewater	Aug. 8, 1988.
K026	All	Aug. 8, 1990.
K027	All	June 8, 1989.
K028 (metals)	Nonwastewater	Aug. 8, 1990.
K028	All others	June 8, 1989.
K029	Wastewater	Aug. 8, 1990.
K029	Nonwastewater	June 8, 1989.
K030	All	Aug. 8, 1988.
K031	Wastewater	Aug. 8, 1990.
K031	Nonwastewater	May 8, 1992.
K032	All	Aug. 8, 1990.

Table 1. -- Effective Dates of Surface Disposed Wastes (Non-Soil and Debris) Regulated in the LDRs[a] - Comprehensive List

Waste code	Waste category	Effective date
K033	All	Aug. 8, 1990.
K034	All	Aug. 8, 1990.
K035	All	Aug. 8, 1990.
K036	Wastewater	June 8, 1989.
K036[c]	Nonwastewater	Aug. 8, 1988.
K037[b]	Wastewater	Aug. 8, 1988.
K037	Nonwastewater	Aug. 8, 1988.
K038	All	June 8, 1989.
K039	All	June 8, 1989.
K040	All	June 8, 1989.
K041	All	Aug. 8, 1990.
K042	All	Aug. 8, 1990.
K043	All	June 8, 1989.
K044[c]	All	Aug. 8, 1988.
K045[c]	All	Aug. 8, 1988.
K046 (Nonreactive)	Nonwastewater	Aug. 8, 1988.
K046	All others	Aug. 8, 1990.
K047[c]	All	Aug. 8, 1988.
K048	Wastewater	Aug. 8, 1990.
K048	Nonwastewater	Nov. 8, 1990.
K049	Wastewater	Aug. 8, 1990.
K049	Nonwastewater	Nov. 8, 1990.
K050	Wastewater	Aug. 8, 1990.
K050	Nonwastewater	Nov. 8, 1990.
K051	Wastewater	Aug. 8, 1990.
K051	Nonwastewater	Nov. 8, 1990.
K052	Wastewater	Aug. 8, 1990.
K052	Nonwastewater	Nov. 8, 1990.
K060	Wastewater	Aug. 8, 1990.
K060[c]	Nonwastewater	Aug. 8, 1988.
K061	Wastewater	Aug. 8, 1990.
K061	Nonwastewater	June 30, 1992.
K062	All	Aug. 8, 1988.
K069 (Non-Calcium Sulfate)[c]	Nonwastewater	Aug. 8, 1988.

Table 1. -- Effective Dates of Surface Disposed Wastes (Non-Soil and Debris) Regulated in the LDRs[a] - Comprehensive List

Waste code	Waste category	Effective date
K069	All others	Aug. 8, 1990.
K071	All	Aug. 8, 1990.
K073	All	Aug. 8, 1990.
K083	All	Aug. 8, 1990.
K084	Wastewater	Aug. 8, 1990.
K084	Nonwastewater	May 8, 1992.
K085	All	Aug. 8, 1990.
K086 (organics)[b]	All	Aug. 8, 1988.
K086	All others	Aug. 8, 1988.
K087	All	Aug. 8, 1988.
K088	Mixed with radioactive wastes	Apr. 8, 1998.
K088	All others	October 8, 1997.
K093	All	June 8, 1989.
K094	All	June 8, 1989.
K095	Wastewater	Aug. 8, 1990.
K095	Nonwastewater	June 8, 1989.
K096	Wastewater	Aug. 8, 1990.
K096	Nonwastewater	June 8, 1989.
K097	All	Aug. 8, 1990.
K098	All	Aug. 8, 1990.
K099	All	Aug. 8, 1988.
K100	Wastewater	Aug. 8, 1990.
K100[c]	Nonwastewater	Aug. 8, 1988.
K101 (organics)	Wastewater	Aug. 8, 1988.
K101 (metals)	Wastewater	Aug. 8, 1990.
K101 (organics)	Nonwastewater	Aug. 8, 1988.
K101 (metals)	Nonwastewater	May 8, 1992.
K102 (organics)	Wastewater	Aug. 8, 1988.
K102 (metals)	Wastewater	Aug. 8, 1990.
K102 (organics)	Nonwastewater	Aug. 8, 1988.
K102 (metals)	Nonwastewater	May 8, 1992.
K103	All	Aug. 8, 1988.

Table 1. -- Effective Dates of Surface Disposed Wastes (Non-Soil and Debris) Regulated in the LDRs[a] - Comprehensive List

Waste code	Waste category	Effective date
K104	All	Aug. 8, 1988.
K105	All	Aug. 8, 1990.
K106	Wastewater	Aug. 8, 1990.
K106	Nonwastewater	May 8, 1992.
K107	Mixed with radioactive wastes	June 30, 1994.
K107	All others	Nov. 9, 1992.
K108	Mixed with radioactive wastes	June 30, 1994.
K108	All others	Nov. 9, 1992.
K109	Mixed with radioactive wastes	June 30, 1994.
K109	All others	Nov. 9, 1992.
K110	Mixed with radioactive wastes	June 30, 1994.
K110	All others	Nov. 9, 1992.
K111	Mixed with radioactive wastes	June 30, 1994.
K111	All others	Nov. 9, 1992.
K112	Mixed with radioactive wastes	June 30, 1994.
K112	All others	Nov. 9, 1992.
K113	All	June 8, 1989.
K114	All	June 8, 1989.
K115	All	June 8, 1989.
K116	All	June 8, 1989.
K117	Mixed with radioactive wastes	June 30, 1994.
K117	All others	Nov. 9, 1992.
K118	Mixed with radioactive wastes	June 30, 1994.
K118	All others	Nov. 9, 1992.
K123	Mixed with radioactive wastes	June 30, 1994.
K123	All others	Nov. 9, 1992.
K124	Mixed with radioactive wastes	June 30, 1994.
K124	All others	Nov. 9, 1992.
K125	Mixed with radioactive wastes	June 30, 1994.
K125	All others	Nov. 9, 1992.
K126	Mixed with radioactive wastes	June 30, 1994.
K126	All others	Nov. 9, 1992.
K131	Mixed with radioactive wastes	June 30, 1994.
K131	All others	Nov. 9, 1992.
K132	Mixed with radioactive wastes	June 30, 1994.

Table 1. -- Effective Dates of Surface Disposed Wastes (Non-Soil and Debris) Regulated in the LDRs[a] - Comprehensive List

Waste code	Waste category	Effective date
K132	All others	Nov. 9, 1992.
K136	Mixed with radioactive wastes	June 30, 1994.
K136	All others	Nov. 9, 1992.
K141	Mixed with radioactive wastes	Sep. 19, 1996.
K141	All others	Dec. 19, 1994.
K142	Mixed with radioactive wastes	Sep. 19, 1996.
K142	All others	Dec. 19, 1994.
K143	Mixed with radioactive wastes	Sep. 19, 1996.
K143	All others	Dec. 19, 1994.
K144	Mixed with radioactive wastes	Sep. 19, 1996.
K144	All others	Dec. 19, 1994.
K145	Mixed with radioactive wastes	Sep. 19, 1996.
K145	All others	Dec. 19, 1994.
K147	Mixed with radioactive wastes	Sep. 19, 1996.
K147	All others	Dec. 19, 1994.
K148	Mixed with radioactive wastes	Sep. 19, 1996.
K148	All others	Dec. 19, 1994.
K149	Mixed with radioactive wastes	Sep. 19, 1996.
K149	All others	Dec. 19, 1994.
K150	Mixed with radioactive wastes	Sep. 19, 1996.
K150	All others	Dec. 19, 1994.
K151	Mixed with radioactive wastes	Sep. 19, 1996.
K151	All others	Dec. 19, 1994.
K156	Mixed with radioactive wastes	Apr. 8, 1998.
K156	All others	July 8, 1996.
K157	Mixed with radioactive wastes	Apr. 8, 1998.
K157	All others	July 8, 1996.
K158	Mixed with radioactive wastes	Apr. 8, 1998.
K158	All others	July 8, 1996.
K159	Mixed with radioactive wastes	Apr. 8, 1998.
K159	All others	July 8, 1996.
K160	Mixed with radioactive wastes	Apr. 8, 1998.
K160	All others	July 8, 1996.
K161	Mixed with radioactive wastes	Apr. 8, 1998.
K161	All others	July 8, 1996.

Table 1. -- Effective Dates of Surface Disposed Wastes (Non-Soil and Debris) Regulated in the LDRs[a] - Comprehensive List

Waste code	Waste category	Effective date
P001	All	Aug 8, 1990.
P002	All	Aug. 8, 1990.
P003	All	Aug. 8, 1990.
P004	All	Aug. 8, 1990.
P005	All	Aug. 8, 1990.
P006	All	Aug. 8, 1990.
P007	All	Aug. 8, 1990.
P008	All	Aug. 8, 1990.
P009	All	Aug. 8, 1990.
P010	Wastewater	Aug. 8, 1990.
P010	Nonwastewater	May 8, 1992.
P011	Wastewater	Aug. 8, 1990.
P011	Nonwastewater	May 8, 1992.
P012	Wastewater	Aug. 8, 1990.
P012	Nonwastewater	May 8, 1992.
P013 (barium)	Nonwastewater	Aug. 8, 1990.
P013	All others	June 8, 1989.
P014	All	Aug. 8, 1990.
P015	All	Aug. 8, 1990.
P016	All	Aug. 8, 1990.
P017	All	Aug. 8, 1990.
P018	All	Aug. 8, 1990.
P020	All	Aug. 8, 1990.
P021	All	June 8, 1989.
P022	All	Aug. 8, 1990.
P023	All	Aug. 8, 1990.
P024	All	Aug. 8, 1990.
P026	All	Aug. 8, 1990.
P027	All	Aug. 8, 1990.
P028	All	Aug. 8, 1990.
P029	All	June 8, 1989.
P030	All	June 8, 1989.
P031	All	Aug. 8, 1990.
P033	All	Aug. 8, 1990.
P034	All	Aug. 8, 1990.

Table 1. -- Effective Dates of Surface Disposed Wastes (Non-Soil and Debris) Regulated in the LDRs[a] - Comprehensive List

Waste code	Waste category	Effective date
P036	Wastewater	Aug. 8, 1990.
P036	Nonwastewater	May 8, 1992.
P037	All	Aug. 8, 1990.
P038	Wastewater	Aug. 8, 1990.
P038	Nonwastewater	May 8, 1992.
P039	All	June 8, 1989.
P040	All	June 8, 1989.
P041	All	June 8, 1989.
P042	All	Aug. 8, 1990.
P043	All	June 8, 1989.
P044	All	June 8, 1989.
P045	All	Aug. 8, 1990.
P046	All	Aug. 8, 1990.
P047	All	Aug. 8, 1990.
P048	All	Aug. 8, 1990.
P049	All	Aug. 8, 1990.
P050	All	Aug. 8, 1990.
P051	All	Aug. 8, 1990.
P054	All	Aug. 8, 1990.
P056	All	Aug. 8, 1990.
P057	All	Aug. 8, 1990.
P058	All	Aug. 8, 1990.
P059	All	Aug. 8, 1990.
P060	All	Aug. 8, 1990.
P062	All	June 8, 1989.
P063	All	June 8, 1989.
P064	All	Aug. 8, 1990.
P065	Wastewater	Aug. 8, 1990.
P065	Nonwastewater	May 8, 1992.
P066	All	Aug. 8, 1990.
P067	All	Aug. 8, 1990.
P068	All	Aug. 8, 1990.
P069	All	Aug. 8, 1990.
P070	All	Aug. 8, 1990.
P071	All	June 8, 1989.

Table 1. -- Effective Dates of Surface Disposed Wastes (Non-Soil and Debris) Regulated in the LDRs[a] - Comprehensive List

Waste code	Waste category	Effective date
P072	All	Aug. 8, 1990.
P073	All	Aug. 8, 1990.
P074	All	June 8, 1989.
P075	All	Aug. 8, 1990.
P076	All	Aug. 8, 1990.
P077	All	Aug. 8, 1990.
P078	All	Aug. 8, 1990.
P081	All	Aug. 8, 1990.
P082	All	Aug. 8, 1990.
P084	All	Aug. 8, 1990.
P085	All	June 8, 1989.
P087	All	May 8, 1992.
P088	All	Aug. 8, 1990.
P089	All	June 8, 1989.
P092	Wastewater	Aug. 8, 1990.
P092	Nonwastewater	May 8, 1992.
P093	All	Aug. 8, 1990.
P094	All	June 8, 1989.
P095	All	Aug. 8, 1990.
P096	All	Aug. 8, 1990.
P097	All	June 8, 1989.
P098	All	June 8, 1989.
P099 (silver)	Wastewater	Aug. 8, 1990.
P099	All others	June 8, 1989.
P101	All	Aug. 8, 1990.
P102	All	Aug. 8, 1990.
P103	All	Aug. 8, 1990.
P104 (silver)	Wastewater	Aug. 8, 1990.
P104	All others	June 8, 1989.
P105	All	Aug. 8, 1990.
P106	All	June 8, 1989.
P108	All	Aug. 8, 1990.
P109	All	June 8, 1989.
P110	All	Aug. 8, 1990.
P111	All	June 8, 1989.

Table 1. -- Effective Dates of Surface Disposed Wastes (Non-Soil and Debris) Regulated in the LDRs[a] - Comprehensive List

Waste code	Waste category	Effective date
P112	All	Aug. 8, 1990.
P113	All	Aug. 8, 1990.
P114	All	Aug. 8, 1990.
P115	All	Aug. 8, 1990.
P116	All	Aug. 8, 1990.
P118	All	Aug. 8, 1990.
P119	All	Aug. 8, 1990.
P120	All	Aug. 8, 1990.
P121	All	June 8, 1989.
P122	All	Aug. 8, 1990.
P123	All	Aug. 8, 1990.
P127	Mixed with radioactive wastes	Apr. 8, 1998.
P127	All others	July 8, 1996.
P128	Mixed with radioactive wastes	Apr. 8, 1998.
P128	All others	July 8, 1996.
P185	Mixed with radioactive wastes	Apr. 8, 1998.
P185	All others	July 8, 1996.
P188	Mixed with radioactive wastes	Apr. 8, 1998.
P188	All others	July 8, 1996.
P189	Mixed with radioactive wastes	Apr. 8, 1998.
P189	All others	July 8, 1996.
P190	Mixed with radioactive wastes	Apr. 8, 1998.
P190	All others	July 8, 1996.
P191	Mixed with radioactive wastes	Apr. 8, 1998.
P191	All others	July 8, 1996.
P192	Mixed with radioactive wastes	Apr. 8, 1998.
P192	All others	July 8, 1996.
P194	Mixed with radioactive wastes	Apr. 8, 1998.
P194	All others	July 8, 1996.
P196	Mixed with radioactive wastes	Apr. 8, 1998.
P196	All others	July 8, 1996.
P197	Mixed with radioactive wastes	Apr. 8, 1998.
P197	All others	July 8, 1996.
P198	Mixed with radioactive wastes	Apr. 8, 1998.
P198	All others	July 8, 1996.

Table 1. -- Effective Dates of Surface Disposed Wastes (Non-Soil and Debris) Regulated in the LDRs[a] - Comprehensive List

Waste code	Waste category	Effective date
P199	Mixed with radioactive wastes	Apr. 8, 1998.
P199	All others	July 8, 1996.
P201	Mixed with radioactive wastes	Apr. 8, 1998.
P201	All others	July 8, 1996.
P202	Mixed with radioactive wastes	Apr. 8, 1998.
P202	All others	July 8, 1996.
P203	Mixed with radioactive wastes	Apr. 8, 1998.
P203	All others	July 8, 1996.
P204	Mixed with radioactive wastes	Apr. 8, 1998.
P204	All others	July 8, 1996.
P205	Mixed with radioactive wastes	Apr. 8, 1998.
P205	All others	July 8, 1996.
U001	All	Aug. 8, 1990.
U002	All	Aug. 8, 1990.
U003	All	Aug. 8, 1990.
U004	All	Aug. 8, 1990.
U005	All	Aug. 8, 1990.
U006	All	Aug. 8, 1990.
U007	All	Aug. 8, 1990.
U008	All	Aug. 8, 1990.
U009	All	Aug. 8, 1990.
U010	All	Aug. 8, 1990.
U011	All	Aug. 8, 1990.
U012	All	Aug. 8, 1990.
U014	All	Aug. 8, 1990.
U015	All	Aug. 8, 1990.
U016	All	Aug. 8, 1990.
U017	All	Aug. 8, 1990.
U018	All	Aug. 8, 1990.
U019	All	Aug. 8, 1990.
U020	All	Aug. 8, 1990.
U021	All	Aug. 8, 1990.
U022	All	Aug. 8, 1990.
U023	All	Aug. 8, 1990.
U024	All	Aug. 8, 1990.

Table 1. -- Effective Dates of Surface Disposed Wastes (Non-Soil and Debris) Regulated in the LDRs[a] - Comprehensive List

Waste code	Waste category	Effective date
U025	All	Aug. 8, 1990.
U026	All	Aug. 8, 1990.
U027	All	Aug. 8, 1990.
U028	All	June 8, 1989.
U029	All	Aug. 8, 1990.
U030	All	Aug. 8, 1990.
U031	All	Aug. 8, 1990.
U032	All	Aug. 8, 1990.
U033	All	Aug. 8, 1990.
U034	All	Aug. 8, 1990.
U035	All	Aug. 8, 1990.
U036	All	Aug. 8, 1990.
U037	All	Aug. 8, 1990.
U038	All	Aug. 8, 1990.
U039	All	Aug. 8, 1990.
U041	All	Aug. 8, 1990.
U042	All	Aug. 8, 1990.
U043	All	Aug. 8, 1990.
U044	All	Aug. 8, 1990.
U045	All	Aug. 8, 1990.
U046	All	Aug. 8, 1990.
U047	All	Aug. 8, 1990.
U048	All	Aug. 8, 1990.
U049	All	Aug. 8, 1990.
U050	All	Aug. 8, 1990.
U051	All	Aug. 8, 1990.
U052	All	Aug. 8, 1990.
U053	All	Aug. 8, 1990.
U055	All	Aug. 8, 1990.
U056	All	Aug. 8, 1990.
U057	All	Aug. 8, 1990.
U058	All	June 8, 1989.
U059	All	Aug. 8, 1990.
U060	All	Aug. 8, 1990.
U061	All	Aug. 8, 1990.

Table 1. -- Effective Dates of Surface Disposed Wastes (Non-Soil and Debris) Regulated in the LDRs[a] - Comprehensive List

Waste code	Waste category	Effective date
U062	All	Aug. 8, 1990.
U063	All	Aug. 8, 1990.
U064	All	Aug. 8, 1990.
U066	All	Aug. 8, 1990.
U067	All	Aug. 8, 1990.
U068	All	Aug. 8, 1990.
U069	All	June 8, 1989.
U070	All	Aug. 8, 1990.
U071	All	Aug. 8, 1990.
U072	All	Aug. 8, 1990.
U073	All	Aug. 8, 1990.
U074	All	Aug. 8, 1990.
U075	All	Aug. 8, 1990.
U076	All	Aug. 8, 1990.
U077	All	Aug. 8, 1990.
U078	All	Aug. 8, 1990.
U079	All	Aug. 8, 1990.
U080	All	Aug. 8, 1990.
U081	All	Aug. 8, 1990.
U082	All	Aug. 8, 1990.
U083	All	Aug. 8, 1990.
U084	All	Aug. 8, 1990.
U085	All	Aug. 8, 1990.
U086	All	Aug. 8, 1990.
U087	All	June 8, 1989.
U088	All	June 8, 1989.
U089	All	Aug. 8, 1990.
U090	All	Aug. 8, 1990.
U091	All	Aug. 8, 1990.
U092	All	Aug. 8, 1990.
U093	All	Aug. 8, 1990.
U094	All	Aug. 8, 1990.
U095	All	Aug. 8, 1990.
U096	All	Aug. 8, 1990.
U097	All	Aug. 8, 1990.

Table 1. -- Effective Dates of Surface Disposed Wastes (Non-Soil and Debris) Regulated in the LDRs[a] - Comprehensive List

Waste code	Waste category	Effective date
U098	All	Aug. 8, 1990.
U099	All	Aug. 8, 1990.
U101	All	Aug. 8, 1990.
U102	All	June 8, 1989.
U103	All	Aug. 8, 1990.
U105	All	Aug. 8, 1990.
U106	All	Aug. 8, 1990.
U107	All	June 8, 1989.
U108	All	Aug. 8, 1990.
U109	All	Aug. 8, 1990.
U110	All	Aug. 8, 1990.
U111	All	Aug. 8, 1990.
U112	All	Aug. 8, 1990.
U113	All	Aug. 8, 1990.
U114	All	Aug. 8, 1990.
U115	All	Aug. 8, 1990.
U116	All	Aug. 8, 1990.
U117	All	Aug. 8, 1990.
U118	All	Aug. 8, 1990.
U119	All	Aug. 8, 1990.
U120	All	Aug. 8, 1990.
U121	All	Aug. 8, 1990.
U122	All	Aug. 8, 1990.
U123	All	Aug. 8, 1990.
U124	All	Aug. 8, 1990.
U125	All	Aug. 8, 1990.
U126	All	Aug. 8, 1990.
U127	All	Aug. 8, 1990.
U128	All	Aug. 8, 1990.
U129	All	Aug. 8, 1990.
U130	All	Aug. 8, 1990.
U131	All	Aug. 8, 1990.
U132	All	Aug. 8, 1990.
U133	All	Aug. 8, 1990.
U134	All	Aug. 8, 1990.

Table 1. -- Effective Dates of Surface Disposed Wastes (Non-Soil and Debris) Regulated in the LDRs[a] - Comprehensive List

Waste code	Waste category	Effective date
U135	All	Aug. 8, 1990.
U136	Wastewater	Aug. 8, 1990.
U136	Nonwastewater	May 8, 1992.
U137	All	Aug. 8, 1990.
U138	All	Aug. 8, 1990.
U140	All	Aug. 8, 1990.
U141	All	Aug. 8, 1990.
U142	All	Aug. 8, 1990.
U143	All	Aug. 8, 1990.
U144	All	Aug. 8, 1990.
U145	All	Aug. 8, 1990.
U146	All	Aug. 8, 1990.
U147	All	Aug. 8, 1990.
U148	All	Aug. 8, 1990.
U149	All	Aug. 8, 1990.
U150	All	Aug. 8, 1990.
U151	Wastewater	Aug. 8, 1990.
U151	Nonwastewater	May 8, 1992.
U152	All	Aug. 8, 1990.
U153	All	Aug. 8, 1990.
U154	All	Aug. 8, 1990.
U155	All	Aug. 8, 1990.
U156	All	Aug. 8, 1990.
U157	All	Aug. 8, 1990.
U158	All	Aug. 8, 1990.
U159	All	Aug. 8, 1990.
U160	All	Aug. 8, 1990.
U161	All	Aug. 8, 1990.
U162	All	Aug. 8, 1990.
U163	All	Aug. 8, 1990.
U164	All	Aug. 8, 1990.
U165	All	Aug. 8, 1990.
U166	All	Aug. 8, 1990.
U167	All	Aug. 8, 1990.
U168	All	Aug. 8, 1990.

Table 1. -- Effective Dates of Surface Disposed Wastes (Non-Soil and Debris) Regulated in the LDRs[a] - Comprehensive List

Waste code	Waste category	Effective date
U169	All	Aug. 8, 1990.
U170	All	Aug. 8, 1990.
U171	All	Aug. 8, 1990.
U172	All	Aug. 8, 1990.
U173	All	Aug. 8, 1990.
U174	All	Aug. 8, 1990.
U176	All	Aug. 8, 1990.
U177	All	Aug. 8, 1990.
U178	All	Aug. 8, 1990.
U179	All	Aug. 8, 1990.
U180	All	Aug. 8, 1990.
U181	All	Aug. 8, 1990.
U182	All	Aug. 8, 1990.
U183	All	Aug. 8, 1990.
U184	All	Aug. 8, 1990.
U185	All	Aug. 8, 1990.
U186	All	Aug. 8, 1990.
U187	All	Aug. 8, 1990.
U188	All	Aug. 8, 1990.
U189	All	Aug. 8, 1990.
U190	All	June 8, 1989.
U191	All	Aug. 8, 1990.
U192	All	Aug. 8, 1990.
U193	All	Aug. 8, 1990.
U194	All	Aug. 8, 1990.
U196	All	Aug. 8, 1990.
U197	All	Aug. 8, 1990.
U200	All	Aug. 8, 1990.
U201	All	Aug. 8, 1990.
U202	All	Aug. 8, 1990.
U203	All	Aug. 8, 1990.
U204	All	Aug. 8, 1990.
U205	All	Aug. 8, 1990.
U206	All	Aug. 8, 1990.
U207	All	Aug. 8, 1990.

Table 1. -- Effective Dates of Surface Disposed Wastes (Non-Soil and Debris) Regulated in the LDRs[a] - Comprehensive List

Waste code	Waste category	Effective date
U208	All	Aug. 8, 1990.
U209	All	Aug. 8, 1990.
U210	All	Aug. 8, 1990.
U211	All	Aug. 8, 1990.
U213	All	Aug. 8, 1990.
U214	All	Aug. 8, 1990.
U215	All	Aug. 8, 1990.
U216	All	Aug. 8, 1990.
U217	All	Aug. 8, 1990.
U218	All	Aug. 8, 1990.
U219	All	Aug. 8, 1990.
U220	All	Aug. 8, 1990.
U221	All	June 8, 1989.
U222	All	Aug. 8, 1990.
U223	All	June 8, 1989.
U225	All	Aug. 8, 1990.
U226	All	Aug. 8, 1990.
U227	All	Aug. 8, 1990.
U228	All	Aug. 8, 1990.
U234	All	Aug. 8, 1990.
U235	All	June 8, 1989.
U236	All	Aug. 8, 1990.
U237	All	Aug. 8, 1990.
U238	All	Aug. 8, 1990.
U239	All	Aug. 8, 1990.
U240	All	Aug. 8, 1990.
U243	All	Aug. 8, 1990.
U244	All	Aug. 8, 1990.
U246	All	Aug. 8, 1990.
U247	All	Aug. 8, 1990.
U248	All	Aug. 8, 1990.
U249	All	Aug. 8, 1990.
U271	Mixed with radioactive wastes	Apr. 8, 1998.
U271	All others	July 8, 1996.
U277	Mixed with radioactive wastes	Apr. 8, 1998.

Table 1. -- Effective Dates of Surface Disposed Wastes (Non-Soil and Debris) Regulated in the LDRs[a] - Comprehensive List

Waste code	Waste category	Effective date
U277	All others	July 8, 1996.
U278	Mixed with radioactive wastes	Apr. 8, 1998.
U278	All others	July 8, 1996.
U279	Mixed with radioactive wastes	Apr. 8, 1998.
U279	All others	July 8, 1996.
U280	Mixed with radioactive wastes	Apr. 8, 1998.
U280	All others	July 8, 1996.
U328	Mixed with radioactive wastes	June 30, 1994.
U328	All others	Nov. 9, 1992.
U353	Mixed with radioactive wastes	June 30, 1994.
U353	All others	Nov. 9, 1992.
U359	Mixed with radioactive wastes	June 30, 1994.
U359	All others	Nov. 9, 1992.
U364	Mixed with radioactive wastes	Apr. 8, 1998.
U364	All others	July 8, 1996.
U365	Mixed with radioactive wastes	Apr. 8, 1998.
U365	All others	July 8, 1996.
U366	Mixed with radioactive wastes	Apr. 8, 1998.
U366	All others	July 8, 1996.
U367	Mixed with radioactive wastes	Apr. 8, 1998.
U367	All others	July 8, 1996.
U372	Mixed with radioactive wastes	Apr. 8, 1998.
U372	All others	July 8, 1996.
U373	Mixed with radioactive wastes	Apr. 8, 1998.
U373	All others	July 8, 1996.
U375	Mixed with radioactive wastes	Apr. 8, 1998.
U375	All others	July 8, 1996.
U376	Mixed with radioactive wastes	Apr. 8, 1998.
U376	All others	July 8, 1996.
U377	Mixed with radioactive wastes	Apr. 8, 1998.
U377	All others	July 8, 1996.
U378	Mixed with radioactive wastes	Apr. 8, 1998.
U378	All others	July 8, 1996.
U379	Mixed with radioactive wastes	Apr. 8, 1998.
U379	All others	July 8, 1996.

Table 1. -- Effective Dates of Surface Disposed Wastes (Non-Soil and Debris) Regulated in the LDRs[a] - Comprehensive List

Waste code	Waste category	Effective date
U381	Mixed with radioactive wastes	Apr. 8, 1998.
U381	All others	July 8, 1996.
U382	Mixed with radioactive wastes	Apr. 8, 1998.
U382	All others	July 8, 1996.
U383	Mixed with radioactive wastes	Apr. 8, 1998.
U383	All others	July 8, 1996.
U384	Mixed with radioactive wastes	Apr. 8, 1998.
U384	All others	July 8, 1996.
U385	Mixed with radioactive wastes	Apr. 8, 1998.
U385	All others	July 8, 1996.
U386	Mixed with radioactive wastes	Apr. 8, 1998.
U386	All others	July 8, 1996.
U387	Mixed with radioactive wastes	Apr. 8, 1998.
U387	All others	July 8, 1996.
U389	Mixed with radioactive wastes	Apr. 8, 1998.
U389	All others	July 8, 1996.
U390	Mixed with radioactive wastes	Apr. 8, 1998.
U390	All others	July 8, 1996.
U391	Mixed with radioactive wastes	Apr. 8, 1998.
U391	All others	July 8, 1996.
U392	Mixed with radioactive wastes	Apr. 8, 1998.
U392	All others	July 8, 1996.
U393	Mixed with radioactive wastes	Apr. 8, 1998.
U393	All others	July 8, 1996.
U394	Mixed with radioactive wastes	Apr. 8, 1998.
U394	All others	July 8, 1996.
U395	Mixed with radioactive wastes	Apr. 8, 1998.
U395	All others	July 8, 1996.
U396	Mixed with radioactive wastes	Apr. 8, 1998.
U396	All others	July 8, 1996.
U400	Mixed with radioactive wastes	Apr. 8, 1998.
U400	All others	July 8, 1996.
U401	Mixed with radioactive wastes	Apr. 8, 1998.
U401	All others	July 8, 1996.
U402	Mixed with radioactive wastes	Apr. 8, 1998.

Table 1. -- Effective Dates of Surface Disposed Wastes (Non-Soil and Debris) Regulated in the LDRs[a] - Comprehensive List

Waste code	Waste category	Effective date
U402	All others	July 8, 1996.
U403	Mixed with radioactive wastes	Apr. 8, 1998.
U403	All others	July 8, 1996.
U404	Mixed with radioactive wastes	Apr. 8, 1998.
U404	All others	July 8, 1996.
U407	Mixed with radioactive wastes	Apr. 8, 1998.
U407	All others	July 8, 1996.
U409	Mixed with radioactive wastes	Apr. 8, 1998.
U409	All others	July 8, 1996.
U410	Mixed with radioactive wastes	Apr. 8, 1998.
U410	All others	July 8, 1996.
U411	Mixed with radioactive wastes	Apr. 8, 1998.
U411	All others	July 8, 1996.

FOOTNOTE: [a] This table does not include mixed radioactive wastes (from the First, Second, and Third rules) which received a national capacity variance until May 8, 1992. This table also does not include contaminated soil and debris wastes.

FOOTNOTE: [b] The standard was revised in the Third Third Final Rule (55 FR 22520, June 1, 1990).

FOOTNOTE: [c] The standard was revised in the Third Third Emergency Rule (58 FR 29860, May 24, 1993); the original effective date was August 8, 1990

FOOTNOTE: [d] The standard was revised in the Phase II Final Rule (59 FR 47982, Sept. 19, 1994); the original effective date was August 8, 1990.

Attachment A2-2 Table UTS - Universal Treatment Standards

[6 CCR 1007-3 Section] 268.48 Table UTS - Universal Treatment Standards

Regulated constituent - common name	CAS[1] No.	Wastewater standard. Concentration in mg/l[2]	Nonwastewater standard. Concentration in mg/kg[3] unless noted as "mg/l TCLP"
I. Organic constituents:			
Acenaphthylene	208-96-8	0.059	3.4
Acenaphthene	83-32-9	0.059	3.4
Acetone	67-64-1	0.28	160
Acetonitrile	75-05-8	5.6	38
Acetophenone	96-86-2	0.010	9.7
2-Acetylaminofluorene	53-96-3	0.059	140
Acrolein	107-02-8	0.29	NA
Acrylamide	79-06-1	19	23
Acrylonitrile	107-13-1	0.24	84
Aldicarb sulfone[6]	1646-88-4	0.056	0.28
Aldrin	309-00-2	0.021	0.066
4-Aminobiphenyl	92-67-1	0.13	NA
Aniline	62-53-3	0.81	14
Anthracene	120-12-7	0.059	3.4
Aramite	140-57-8	0.36	NA
alpha-BHC	319-84-6	0.00014	0.066
beta-BHC	319-85-7	0.00014	0.066
delta-BHC	319-86-8	0.023	0.066
gamma-BHC	58-89-9	0.0017	0.066
Barban[6]	101-27-9	0.056	1.4
Bendiocarb[6]	22781-23-3	0.056	1.4
Benomyl[6]	17804-35-2	0.056	1.4
Benzene	71-43-2	0.14	10
Benz(a)anthracene	56-55-3	0.059	3.4
Benzal chloride	98-87-3	0.055	6.0
Benzo(b)fluoranthene (difficult to distinguish from benzo(k)fluoranthene)	205-99-2	0.11	6.8
Benzo(k)fluoranthene (difficult to distinguish from benzo(b)fluoranthene)	207-08-9	0.11	6.8
Benzo(g,h,i)perylene	191-24-2	0.0055	1.8
Benzo(a)pyrene	50-32-8	0.061	3.4

[6 CCR 1007-3 Section] 268.48 Table UTS - Universal Treatment Standards

Regulated constituent - common name	CAS[1] No.	Wastewater standard. Concentration in mg/l[2]	Nonwastewater standard. Concentration in mg/kg[3] unless noted as "mg/l TCLP"
Bromodichloromethane	75-27-4	0.35	15
Bromomethane/Methyl bromide	74-83-9	0.11	15
4-Bromophenyl phenyl ether	101-55-3	0.055	15
n-Butyl alcohol	71-36-3	5.6	2.6
Butylate[6]	2008-41-5	0.042	1.4
Butyl benzyl phthalate	85-68-7	0.017	28
2-sec-Butyl-4,6-dinitrophenol (Dinoseb)	88-85-7	0.066	2.5
Carbaryl[6]	63-25-2	0.006	0.14
Carbenzadim[6]	10605-21-7	0.056	1.4
Carbofuran[6]	1563-66-2	0.006	0.14
Carbofuran phenol[6]	1563-38-2	0.056	1.4
Carbon disulfide	75-15-0	3.8	4.8 mg/l TCLP
Carbon tetrachloride	56-23-5	0.057	6.0
Carbosulfan[6]	55285-14-8	0.028	1.4
Chlordane (alpha and gamma isomers)	57-74-9	0.0033	0.26
p-Chloroaniline	106-47-8	0.46	16
Chlorobenzene	108-90-7	0.057	6.0
Chlorobenzilate	510-15-6	0.10	NA
2-Chloro-1,3-butadiene	126-99-8	0.057	0.28
Chlorodibromomethane	124-48-1	0.057	15
Chloroethane	75-00-3	0.27	6.0
bis(2-Chloroethoxy)methane	111-91-1	0.036	7.2
bis(2-Chloroethyl)ether	111-44-4	0.033	6.0
Chloroform	67-66-3	0.046	6.0
bis(2-Chloroisopropyl)ether	39638-32-9	0.055	7.2
p-Chloro-m-cresol	59-50-7	0.018	14
2-Chloroethyl vinyl ether	110-75-8	0.062	NA
Chloromethane (Methyl chloride)	74-87-3	0.19	30
2-Chloronaphthalene	91-58-7	0.055	5.6
2-Chlorophenol	95-57-8	0.044	5.7
3-Chloropropylene	107-05-1	0.036	30
Chrysene	218-01-9	0.059	3.4
o-Cresol	95-48-7	0.11	5.6
m-Cresol (difficult to distinguish	108-39-4	0.77	5.6

[6 CCR 1007-3 Section] 268.48 Table UTS - Universal Treatment Standards

Regulated constituent - common name	CAS[1] No.	Wastewater standard. Concentration in mg/l[2]	Nonwastewater standard. Concentration in mg/kg[3] unless noted as "mg/l TCLP"
from p-cresol)			
p-Cresol (difficult to distinguish from m-cresol)	106-44-5	0.77	5.6
m-Cumenyl methylcarbamate[6]	64-00-6	0.056	1.4
Cyclohexanone	108-94-1	0.36	0.75 mg/l TCLP
o,p'-DDD	53-19-0	0.023	0.087
p,p'-DDD	72-54-8	0.023	0.087
o,p'-DDE	3424-82-6	0.031	0.087
p,p'-DDE	72-55-9	0.031	0.087
o,p'-DDT	789-02-6	0.0039	0.087
p,p'-DDT	50-29-3	0.0039	0.087
Dibenz(a,h)anthracene	53-70-3	0.055	8.2
Dibenz(a,e)pyrene	192-65-4	0.061	NA
1,2-Dibromo-3-chloropropane	96-12-8	0.11	15
1,2-Dibromoethane/Ethylene dibromide	106-93-4	0.028	15
Dibromomethane	74-95-3	0.11	15
m-Dichlorobenzene	541-73-1	0.036	6.0
o-Dichlorobenzene	95-50-1	0.088	6.0
p-Dichlorobenzene	106-46-7	0.090	6.0
Dichlorodifluoromethane	75-71-8	0.23	7.2
1,1-Dichloroethane	75-34-3	0.059	6.0
1,2-Dichloroethane	107-06-2	0.21	6.0
1,1-Dichloroethylene	75-35-4	0.025	6.0
trans-1,2-Dichloroethylene	156-60-5	0.054	30
2,4-Dichlorophenol	120-83-2	0.044	14
2,6-Dichlorophenol	87-65-0	0.044	14
2,4-Dichlorophenoxyacetic acid/2,4-D	94-75-7	0.72	10
1,2-Dichloropropane	78-87-5	0.85	18
cis-1,3-Dichloropropylene	10061-01-5	0.036	18
trans-1,3-Dichloropropylene	10061-02-6	0.036	18
Dieldrin	60-57-1	0.017	0.13
Diethyl phthalate	84-66-2	0.20	28
p-Dimethylaminoazobenzene	60-11-7	0.13	NA
2-4-Dimethyl phenol	105-67-9	0.036	14

[6 CCR 1007-3 Section] 268.48 Table UTS - Universal Treatment Standards

Regulated constituent - common name	CAS[1] No.	Wastewater standard. Concentration in mg/l[2]	Nonwastewater standard. Concentration in mg/kg[3] unless noted as "mg/l TCLP"
Dimethyl phthalate	131-11-3	0.047	28
Di-n-butyl phthalate	84-74-2	0.057	28
1,4-Dinitrobenzene	100-25-4	0.32	2.3
4,6-Dinitro-o-cresol	534-52-1	0.28	160
2,4-Dinitrophenol	51-28-5	0.12	160
2,4-Dinitrotoluene	121-14-2	0.32	140
2,6-Dinitrotoluene	606-20-2	0.55	28
Di-n-octyl phthalate	117-84-0	0.017	28
Di-n-propylnitrosamine	621-64-7	0.40	14
1,4-Dioxane	123-91-1	12.0	170
Diphenylamine (difficult to distinguish from diphenylnitrosamine)	122-39-4	0.92	13
Diphenylnitrosamine (difficult to distinguish from diphenylamine)	86-30-6	0.92	13
1,2-Diphenylhydrazine	122-66-7	0.087	NA
Disulfoton	298-04-3	0.017	6.2
Dithiocarbamates (total)[6]	NA	0.028	28
Endosulfan I	959-98-8	0.023	0.066
Endosulfan II	33213-65-9	0.029	0.13
Endosulfan sulfate	1031-07-8	0.029	0.13
Endrin	72-20-8	0.0028	0.13
Endrin aldehyde	7421-93-4	0.025	0.13
EPTC[6]	759-94-4	0.042	1.4
Ethyl acetate	141-78-6	0.34	33
Ethyl benzene	100-41-4	0.057	10
Ethyl cyanide (Propanenitrile)	107-12-0	0.24	360
Ethyl ether	60-29-7	0.12	160
bis(2-Ethylhexyl) phthalate	117-81-7	0.28	28
Ethyl methacrylate	97-63-2	0.14	160
Ethylene oxide	75-21-8	0.12	NA
Famphur	52-85-7	0.017	15
Fluoranthene	206-44-0	0.068	3.4
Fluorene	86-73-7	0.059	3.4
Formetanate hydrochloride[6]	23422-53-9	0.056	1.4
Heptachlor	76-44-8	0.0012	0.066

[6 CCR 1007-3 Section] 268.48 Table UTS - Universal Treatment Standards

Regulated constituent - common name	CAS[1] No.	Wastewater standard. Concentration in mg/l[2]	Nonwastewater standard. Concentration in mg/kg[3] unless noted as "mg/l TCLP"
Heptachlor epoxide	1024-57-3	0.016	0.066
Hexachlorobenzene	118-74-1	0.055	10
Hexachlorobutadiene	87-68-3	0.055	5.6
Hexachlorocyclopentadiene	77-47-4	0.057	2.4
HxCDDs (All Hexachlorodibenzo-p-dioxins)	NA	0.000063	0.001
HxCDFs (All Hexachlorodibenzofurans)	NA	0.000063	0.001
Hexachloroethane	67-72-1	0.055	30
Hexachloropropylene	1888-71-7	0.035	30
Indeno (1,2,3-c,d) pyrene	193-39-5	0.0055	3.4
Iodomethane	74-88-4	0.19	65
Isobutyl alcohol	78-83-1	5.6	170
Isodrin	465-73-6	0.021	0.066
Isosafrole	120-58-1	0.081	2.6
Kepone	143-50-0	0.0011	0.13
Methacrylonitrile	126-98-7	0.24	84
Methanol	67-56-1	5.6	0.75 mg/l TCLP
Methapyrilene	91-80-5	0.081	1.5
Methiocarb[6]	2032-65-7	0.056	1.4
Methomyl[6]	16752-77-5	0.028	0.14
Methoxychlor	72-43-5	0.25	0.18
3-Methylcholanthrene	56-49-5	0.0055	15
4,4-Methylene bis(2-chloroaniline)	101-14-4	0.50	30
Methylene chloride	75-09-2	0.089	30
Methyl ethyl ketone	78-93-3	0.28	36
Methyl isobutyl ketone	108-10-1	0.14	33
Methyl methacrylate	80-62-6	0.14	160
Methyl methansulfonate	66-27-3	0.018	NA
Methyl parathion	298-00-0	0.014	4.6
Metolcarb[6]	1129-41-5	0.056	1.4
Mexacarbate[6]	315-18-4	0.056	1.4
Molinate[6]	2212-67-1	0.042	1.4
Naphthalene	91-20-3	0.059	5.6
2-Naphthylamine	91-59-8	0.52	NA

[6 CCR 1007-3 Section] 268.48 Table UTS - Universal Treatment Standards

Regulated constituent - common name	CAS[1] No.	Wastewater standard. Concentration in mg/l[2]	Nonwastewater standard. Concentration in mg/kg[3] unless noted as "mg/l TCLP"
o-Nitroaniline	88-74-4	0.27	14
p-Nitroaniline	100-01-6	0.028	28
Nitrobenzene	98-95-3	0.068	14
5-Nitro-o-toluidine	99-55-8	0.32	28
o-Nitrophenol	88-75-5	0.028	13
p-Nitrophenol	100-02-7	0.12	29
N-Nitrosodiethylamine	55-18-5	0.40	28
N-Nitrosodimethylamine	62-75-9	0.40	2.3
N-Nitroso-di-n-butylamine	924-16-3	0.40	17
N-Nitrosomethylethylamine	10595-95-6	0.40	2.3
N-Nitrosomorpholine	59-89-2	0.40	2.3
N-Nitrosopiperidine	100-75-4	0.013	35
N-Nitrosopyrrolidine	930-55-2	0.013	35
Oxamyl[6]	23135-22-0	0.056	0.28
Parathion	56-38-2	0.014	4.6
Total PCBs (sum of all PCB isomers, or all Aroclors)	1336-36-3	0.10	10
Pebulate[6]	1114-71-2	0.042	1.4
Pentachlorobenzene	608-93-5	0.055	10
PeCDDs (All Pentachlorodibenzo-p-dioxins)	NA	0.000063	0.001
PeCDFs (All Pentachlorodibenzofurans)	NA	0.000035	0.001
Pentachloroethane	76-01-7	0.055	6.0
Pentachloronitrobenzene	82-68-8	0.055	4.8
Pentachlorophenol	87-86-5	0.089	7.4
Phenacetin	62-44-2	0.081	16
Phenanthrene	85-01-8	0.059	5.6
Phenol	108-95-2	0.039	6.2
Phorate	298-02-2	0.021	4.6
Phthalic acid	100-21-0	0.055	28
Phthalic anhydride	85-44-9	0.055	28
Physostigmine[6]	57-47-6	0.056	1.4
Physostigmine salicylate[6]	57-64-7	0.056	1.4
Promecarb[6]	2631-37-0	0.056	1.4
Pronamide	23950-58-5	0.093	1.5

[6 CCR 1007-3 Section] 268.48 Table UTS - Universal Treatment Standards

Regulated constituent - common name	CAS[1] No.	Wastewater standard. Concentration in mg/l[2]	Nonwastewater standard. Concentration in mg/kg[3] unless noted as "mg/l TCLP"
Propham[6]	122-42-9	0.056	1.4
Propoxur[6]	114-26-1	0.056	1.4
Prosulfocarb[6]	52888-80-9	0.042	1.4
Pyrene	129-00-0	0.067	8.2
Pyridine	110-86-1	0.014	16
Safrole	94-59-7	0.081	22
Silvex (2,4,5-TP)	93-72-1	0.72	7.9
1,2,4,5-Tetrachlorobenzene	95-94-3	0.055	14
TCDDs (All Tetrachlorodibenzo-p-dioxins)	NA	0.000063	0.001
TCDFs (All Tetrachlorodibenzofurans)	NA	0.000063	0.001
1,1,1,2-Tetrachloroethane	630-20-6	0.057	6.0
1,1,2,2-Tetrachloroethane	79-34-5	0.057	6.0
Tetrachloroethylene	127-18-4	0.056	6.0
2,3,4,6-Tetrachlorophenol	58-90-2	0.030	7.4
Thiodicarb[6]	59669-26-0	0.019	1.4
Thiophanate-methyl[6]	23564-05-8	0.056	1.4
Toluene	108-88-3	0.080	10
Toxaphene	8001-35-2	0.0095	2.6
Triallate[6]	2303-17-5	0.042	1.4
Tribromomethane/Bromoform	75-25-2	0.63	15
2,4,6-Tribromophenol	118-79-6	0.035	7.4
1,2,4-Trichlorobenzene	120-82-1	0.055	19
1,1,1-Trichloroethane	71-55-6	0.054	6.0
1,1,2-Trichloroethane	79-00-5	0.054	6.0
Trichloroethylene	79-01-6	0.054	6.0
Trichloromonofluoromethane	75-69-4	0.020	30
2,4,5-Trichlorophenol	95-95-4	0.18	7.4
2,4,6-Trichlorophenol	88-06-2	0.035	7.4
2,4,5-Trichlorophenoxyacetic acid/2,4,5-T	93-76-5	0.72	7.9
1,2,3-Trichloropropane	96-18-4	0.85	30
1,1,2-Trichloro-1,2,2-trifluoroethane	76-13-1	0.057	30
Triethylamine[6]	101-44-8	0.081	1.5
tris-(2,3-Dibromopropyl) phosphate	126-72-7	0.11	0.10
Vernolate[6]	1929-77-7	0.042	1.4

[6 CCR 1007-3 Section] 268.48 Table UTS - Universal Treatment Standards

Regulated constituent - common name	CAS[1] No.	Wastewater standard. Concentration in mg/l[2]	Nonwastewater standard. Concentration in mg/kg[3] unless noted as "mg/l TCLP"
Vinyl chloride	75-01-4	0.27	6.0
Xylenes-mixed isomers (sum of o-,m-, and p-xylene concentrations)	1330-20-7	0.32	30
II. Inorganic Constituents:			
Antimony	7440-36-0	1.9	1.15 mg/l TCLP
Arsenic	7440-38-2	1.4	5.0 mg/l TCLP
Barium	7440-39-3	1.2	21 mg/l TCLP
Beryllium	7440-41-7	0.82	1.22 mg/l TCLP
Cadmium	7440-43-9	0.69	0.11 mg/l TCLP
Chromium (Total)	7440-47-3	2.77	0.60 mg/l TCLP
Cyanides (Total)[4]	57-12-5	1.2	590
Cyanides (Amenable)[4]	57-12-5	0.86	30
Fluoride[5]	16984-48-8	35	NA
Lead	7439-92-1	0.69	0.75 mg/l TCLP
Mercury-Nonwastewater from Retort	7439-97-6	NA	0.20 g/l TCLP
Mercury-All Others	7439-97-6	0.15	0.025 mg/l TCLP
Nickel	7440-02-0	3.98	11 mg/l TCLP
Selenium[7]	7782-49-2	0.82	5.7 mg/l TCLP
Silver	7440-22-4	0.43	0.14 mg/l TCLP
Sulfide[5]	18496-25-8	14	NA
Thallium	7440-28-0	1.4	0.20 mg/l TCLP
Vanadium[5]	7440-62-2	4.3	1.6 mg/l TCLP
Zinc[5]	7440-66-6	2.61	4.3 mg/l TCLP

[1] CAS means Chemical Abstract Services. When the waste code and/or regulated constituents are described as a combination of a chemical with its salts and/or esters, the CAS number is given for the parent compound only.

[2] Concentration standards for wastewaters are expressed in mg/l and are based on analysis of composite samples.

[3] Except for Metals (EP or TCLP) and Cyanides (Total and Amenable) the nonwastewater treatment standards expressed as a concentration were established, in part, based upon incineration in units operated in accordance with the technical requirements of Part 264, Subpart O or Part 265, Subpart O, or based upon combustion in fuel substitution units operating in accordance with applicable technical requirements. A facility may comply with these treatment standards according to provisions in ' 268.40(d). All concentration standards for nonwastewaters are based on analysis of grab samples.

[4] Both Cyanides (Total) and Cyanides (Amenable) for nonwastewaters are to be analyzed using Method 9010 or 9012, found in "Test Methods for Evaluating Solid Waste, Physical/Chemical Methods", EPA Publication SW-846, as incorporated by reference in ' 260.11, with a sample size of 10 grams and a distillation time of one hour and 15 minutes.

[5] These constituents are not "underlying hazardous constituents" in characteristic wastes, according to the definition at ' 268.2(i).

[6] Between August 26, 1998, and March 4, 1999, these constituents are not "underlying hazardous constituents" as defined at ' 268.2(i) of this part.

[7] This constituent is not an underlying hazardous constituent as defined at ' 268.2(i) of this part because its UTS level is greater than its TC level, thus a treated selenium waste would always be characteristically hazardous, unless it is treated to below its characteristic level.

Note: NA means not applicable.

References

Colorado Department of Public Health and Environment. October 2001. *Guide to Generator Requirements of the Colorado Hazardous Waste Regulations.*

Colorado Department of Public Health and Environment. December 1997. *Proposed Soil Remediation Objectives Policy Document.*

Colorado Department of Public Health and Environment - Water Quality Control Division. *The Basic Standards for Ground water,* 41.0 (5 CCR 1002-41).

Conrad, D.L. and W.R. Deever, *Save Test Dollars Using TCLP Alternative*, EC&S, 14 May-June 1992.

APPENDIX 3 MANAGEMENT OF REMEDIATION WASTE

1.0 Purpose

The proper management, characterization, treatment, and disposal of the materials generated during the implementation of Resource Conservation and Recovery Act (RCRA) corrective action investigations and/or cleanup activities can be confusing, difficult and expensive. The Department believes that the difficulties and expense of managing, treating and disposing of waste generated during cleanup should not be a roadblock to the rapid clean up of RCRA corrective action facilities so long as the continued protection of human health and the environment is assured. It is the Department's intent to help facilities employ the regulations, policies and approaches described in this Appendix to achieve clean up goals quickly and efficiently.

The purpose of this Appendix is to clarify and summarize the Department's requirements for management and disposal of materials that are generated during investigation or cleanup activities. The guidance describes regulatory mechanisms (e.g., the contained-out policy) that have been created specifically to reduce some of the regulatory hurdles, which in the past have encumbered the management of materials generated during RCRA corrective actions and provides a flow chart (Flowchart A3-1) that can be followed when planning and implementing RCRA corrective actions.

2.0 Definition of Remediation Waste

The first step to take when dealing with materials generated during a RCRA corrective action investigation or cleanup activities is to determine whether it is a remediation waste. The term remediation waste is specifically defined in the Colorado Hazardous Waste Regulations, 6 Code of Colorado Regulations 1007-3, Part 260, Section 260.10 (6 CCR 1007-3 §260.10) as "all solid and hazardous wastes, and all media (including ground water, surface water, soils and sediments) and debris that contain listed hazardous wastes or that themselves exhibit a hazardous waste characteristic and are managed for implementing cleanup". The term remediation waste management site "means a facility where an owner or operator is or will be treating, storing or disposing of hazardous remediation wastes."

Examples of remediation waste include:

- soil that is removed from the ground during drilling of soil borings/monitoring wells, soil sampling or excavation of contaminated soil;
- ground water extracted from a well during sampling or implementation of pumping tests;
- construction rubble or old synthetic liner material from the demolition of a building or structure;
- disposable sampling equipment or personal protective equipment;
- decontamination water generated during and investigation.

If a material does not meet the definition of remediation waste, it is most likely a process waste generated during normal facility operations. The management of disposal of non-remediation waste is outside the scope of this Appendix. For additional information regarding the management of non-remediation waste, please refer to the Department's "Guide to Generator Requirements of the Colorado Hazardous Waste Regulations," Fourth Edition, October 2001.

3.0 Procedures for Management of Remediation Waste

3.1 Making a Hazardous Waste Determination for Remediation Waste

The second step to take when managing a remediation waste is to determine whether the remediation waste contains a solid waste or is itself a solid waste as defined in 6 CCR 1007-3 Section 261.2. If the

remediation waste does not contain a solid waste and is not a solid waste itself, then there are no requirements for management or disposal of the material under RCRA. If the remediation waste does contain a solid waste, or is a solid waste, then the next step is to determine whether the remediation waste contains, or is, a hazardous waste. The methods for making these determinations are described below.

The investigation and clean up of RCRA corrective action facilities almost always involves the generation of remediation waste. The remediation waste can typically be grouped into two categories: (1) a contaminated environmental media (e.g., soil, ground water, surface water and sediment) that may contain a solid waste or 2) a material that is known to meet the definition of solid waste under 6 CCR 1007-3 Section 261.2 (e.g., disposable sampling equipment, decontamination water or demolition debris, etc.).

The collection of adequate waste characterization information is crucial to determining whether a remediation waste is a solid waste and whether it is, or contains, a hazardous waste. Waste characterization information can consist of process knowledge information (particularly for determining whether the waste contains a listed hazardous waste) where the origin of the waste is known from facility records and/or the results of sampling and laboratory analytical efforts on the waste itself. In some cases, adequate waste characterization data will be available prior to actual generation of the waste and the waste can be managed in the appropriate manner as it is generated. In other cases, waste characterization will be performed after the remediation waste is generated. In cases where it is reasonably suspected that contamination is present, the Department strongly recommends that facilities manage the waste as if is hazardous waste upon generation in order to ensure compliance with the Colorado Hazardous Waste Regulations in the event it does prove to be a hazardous waste.

Information regarding characterization of waste and how to make solid waste and hazardous waste determinations is available in the Department's Hazardous Waste Identification Guidance Document, First Edition, September 1998. Commercial or public waste treatment or waste disposal facilities will also be able to help with planning waste characterization activities and hazardous waste determinations.

3.1.1 Contaminated Environmental Media Remediation Waste

Environmental media by itself is not a solid waste, and therefore cannot be a hazardous waste. However, it is possible for the environmental media to "contain" a solid waste if it has been contaminated with a hazardous constituent due to a release from the facility. To determine whether an environmental media contains a solid waste, samples should be collected from the media for laboratory analysis to determine whether the environmental media is contaminated with a hazardous constituent. In general, the Department considers an environmental media to be contaminated with (or contain) a solid waste if it contains a hazardous constituent at a concentration above the analytical method detection limit for organic constituents, or above background concentrations for inorganic constituents.

If the environmental media does not contain a solid waste, then there are no requirements for management or disposal of the material under RCRA. If the environmental media does contain a solid waste, then the next step is to make a hazardous waste determination. The environmental media containing a solid waste may be classified as hazardous waste if it contains a listed hazardous waste, as defined under 6 CCR 1007-3 Part 261 Subpart D, and the constituent concentrations are at levels that may pose a risk to human health and the environment. For example, soil that has been contaminated due to a release of a spent halogenated solvent that had been used for degreasing (F001 hazardous waste listing) would be considered to "contain" F001 hazardous waste once the soil was removed from the ground. Note that even if a waste was disposed of prior to the 1980 effective date of the RCRA hazardous waste regulations, the RCRA hazardous waste listing may still apply if the waste is treated stored, disposed of or otherwise handled after 1980. See Appendix 2 to determine whether the environmental media contaminated with listed constituents poses a risk and should therefore be managed as a hazardous waste.

The environmental media may also contain enough of a particular hazardous constituent(s) that samples of the contaminated environmental media itself exhibits a characteristic of hazardous waste as defined under 6 CCR 1007-3 Part 261, Subpart C. For example, soil that has been contaminated due to a release of lead dust may exceed the maximum concentration of contaminants for the toxicity characteristic of Table 1 of 6 CCR 1007-3 §261.24. The contaminated soil would then exhibit the characteristic of hazardous waste and be classified as "D008" characteristic hazardous waste.

If contaminated environmental media contain hazardous waste, they are subject to all applicable RCRA requirements until they no longer contain hazardous waste. See the discussion of disposal of hazardous remediation waste below in Section 3.2.

3.1.2 Solid Waste Remediation Waste

Examples of remediation waste that are classified as solid waste include: disposable personal protective equipment (PPE), disposable sampling equipment, concrete or asphalt pavement rubble, used synthetic liner materials, decontamination water generated during site investigations, residual process waste from a pre-RCRA surface impoundment or landfill and residuals from the treatment of remediation waste. Since these materials are solid waste, they can be hazardous waste if they are contaminated with listed hazardous waste or exhibit a characteristic of hazardous waste. If a remediation waste is known to be a solid waste, then the next step is to determine whether the remediation waste also meets the definition of hazardous waste under 6 CCR 1007-3 Section 261.3.

This type of remediation waste is a hazardous waste if it exhibits a characteristic of hazardous waste as defined in under 6 CCR 1007-3 Part 261, Subpart C. A characteristic hazardous waste determination is typically based on the results of testing performed on a representative sample of the solid waste. These tests include a flash point test for ignitability (6 CCR 1007-3 Section 261.21), a pH test and corrosion of steel test for corrosivity (6 CCR 1007-3 Section 261.22), and a toxicity characteristic leaching procedure (TCLP) analysis to determine the toxicity characteristic (6 CCR 1007-3 Section 261.24). There are also a number of different tests specified in 6 CCR 1007-3 Section 261.23 to determine whether a waste is a reactive hazardous waste.

A solid waste remediation waste is a hazardous waste if it is itself a listed hazardous waste, or it is derived from, or mixed with, any listed hazardous waste as defined under 6 CCR 1007-3 Part 261, Subpart D. A listed hazardous waste determination may be made based on "process knowledge" of how that solid waste was generated and/or the results of totals analyses of samples of the solid waste.

If a solid waste remediation waste is determined to be non-hazardous waste, then the remediation waste must be managed in accordance with the guidelines and protocols specified in the Colorado Solid Waste Disposal Site and Facilities Act and the Colorado Solid Waste Regulations at 6 CCR 1007-2. If the solid waste remediation waste is determined to be a hazardous waste, it is subject to all applicable RCRA requirements until they no longer contain hazardous waste.

3.2 Disposal of Hazardous Remediation Waste

3.2.1 Disposal of Contaminated Environmental Media Hazardous Remediation Waste

In an acknowledgement that contaminated environmental media, of itself, is generally not a process waste generated during normal business operations at a facility, and therefore not the original "target" of the RCRA Regulations, the Department has developed the Contained-Out Determination Criteria to help ease the burden of disposal of contaminated environmental media that contain hazardous waste. This procedure is presented in Appendix 2. Under the contained-out determination procedure, the Department considers that contaminated environmental media no longer contain a hazardous waste when: (1) they no

longer exhibit the characteristic of hazardous waste; and (2) when concentrations of hazardous constituents from listed hazardous wastes are below human health-risk based levels; and (3) they are protective of water quality. Generally, contaminated environmental media that have met the contained-out criteria are not subject to RCRA hazardous waste requirements. However, in some cases, contaminated environmental media that contained a hazardous when first generated (i.e., removed from the ground) remain subject to the RCRA land disposal restrictions of 6 CCR 1007-3 Part 268.

The Department has developed contained-out criteria that identify two different disposal options for contaminated environmental media depending of the actual concentration of hazardous constituents remaining in the media. The first disposal option is a restricted use contained-out determination, where the concentrations of hazardous constituents remaining in the media are low enough that the media is deemed to no longer contain hazardous waste, but are high enough to require disposal in accordance with the guidelines and protocols specified in the Colorado Solid Waste Disposal Site and Facilities Act and the Colorado Solid Waste Regulations at 6 CCR 1007-2. The second disposal option is the unrestricted use contained-out determination where the concentrations of hazardous constituents are deemed to no longer represent a threat to human health and the environment. There are no restrictions under RCRA for the management of environmental media that have obtained an unrestricted use designation. However, prior to final disposition of the material, the owner/operator should ensure that there are no other regulatory requirements (e.g., discharge permits for the pumping of ground water to a surface water body) associated with selected method for final disposition of the uncontaminated environmental media.

A detailed description of the Department's Contained-Out Determination Criteria is provided in Appendix 2 of this Corrective Action Guidance Document. Appendix 2 also provides a flowchart for determining whether the contained-out environmental media remain subject to the RCRA land disposal restrictions of 6 CCR 1007-3 Part 268.

If the concentrations of a hazardous constituent(s) in a contaminated environmental media is such that a contained-out determination cannot be made, then the environmental media must be managed as a hazardous waste from the time of generation (i.e., removal from the ground) and treated and/or disposed of accordingly. There are a number of options available for the initial management and storage of contaminated environmental media, ranging in complexity from simple containerization (drum or roll-off dumpster) and off-site disposal, to storage, treatment and/or disposal in an on-site RCRA Corrective Action Management Unit (CAMU). The various storage, treatment and/or disposal options for hazardous remediation waste are discussed in Section 3.3 of this Appendix.

3.2.2 Disposal of Solid Waste Hazardous Remediation Waste

In order to decide the appropriate method for disposal of a hazardous remediation waste, it is first necessary to determine whether or not the hazardous remediation waste is a "debris." This determination is important due to promulgation of the "debris rule" in the Colorado Hazardous Waste Regulations, which under 6 CCR 1007-3 §261.3(f) allows exclusion of hazardous debris waste from the RCRA hazardous waste management and disposal requirements under specific conditions.

<u>Disposal of Hazardous Remediation Debris Waste</u>

The term "debris" is specifically defined in the Colorado Hazardous Waste Regulations, 6 CCR 1007-3, Part 268, Section 268.2(g) as "solid material exceeding a 60 mm particle size that is intended for disposal and that is: a manufactured object; or plant or animal matter; or natural geologic material". The term "hazardous debris" (Section 268.2(h)) is defined as "debris that contains a hazardous waste listed in Subpart D of Part 261 of these regulations, or that exhibits a characteristic of hazardous waste identified in Subpart C of Part 261 of these regulations". The definition of debris excludes any material for which a specific treatment standard is provided in Subpart D of Part 268 (e.g., lead-acid and cadmium batteries) and also excludes process wastes and residues from the treatment of waste. A mixture of debris and other

materials, such as soil or sludge, is considered a debris if the mixture is comprised primarily of debris based on visual inspection. Examples of debris waste include: disposable personal protective equipment (PPE), disposable sampling equipment, concrete or asphalt pavement rubble, used synthetic liner materials, and building demolition rubble.

The Colorado Hazardous Waste Regulations at 6 CCR 1007-3 Section 268.45 specify treatment standards and treatment technologies for hazardous debris waste that must be satisfied prior to land disposal. The exclusion for debris waste from RCRA requirements under 6 CCR 1007-3 Section 261.3(f)(1) states that, provided the debris does not exhibit a characteristic of hazardous waste, hazardous debris that has been treated using one of the technologies in Table 1 of Section 268.45 is no longer subject to regulation as hazardous waste. For example, an old high density polyethylene liner that would be classified as hazardous debris due to contact with a listed hazardous waste could be treated with a high pressure water spray to remove hazardous contaminants from the surface to meet the treatment standard. The facility claiming this exclusion should keep records of the disposition of the wastes that include documentation of the specific type of treatment used and that the treatment qualifies for the technology in Section 268.45. Records must kept to show that the actual treatment of the waste met the performance requirements for the specific extraction or destruction technology employed.

The exclusion for debris waste from RCRA requirements under 6 CCR 1007-3 Section 261.3(f)(2) allows the Department Director, considering the extent of contamination, to determine that a debris is no longer contaminated with hazardous waste and therefore, is no longer subject to regulation as hazardous waste. For example, the Department Director could determine that personal protective equipment and/or disposable sampling equipment hazardous debris waste that is classified as a listed hazardous waste due to contact with ground water containing listed hazardous waste is not subject to regulation as hazardous waste because the debris waste would not be expected to be highly contaminated with hazardous constituents. A facility wishing to claim this exclusion must submit information to the Department that shows that the concentration of hazardous waste contained in the debris does not pose a significant threat. For those debris waste that lend themselves to the collection of samples for laboratory analysis, the demonstration could be made in a manner similar to the contained out procedure for environmental media described in Appendix 2 of this guidance document. Other information regarding the nature of the debris and its management may also be considered by the Department in making this determination. For the example of the personal protective equipment or disposable sampling equipment described above, the demonstration could be made through written documentation of visual observations of the cleanliness of the debris waste. This exclusion should only be used with the concurrence of the Department.

It is important to remember when these exclusions are used that the debris is still a solid waste that must be managed in accordance with the guidelines and protocols specified in the Colorado Solid Waste Disposal Site and Facilities Act and the Colorado Solid Waste Regulations at 6 CCR 1007-2.

Disposal of Non-Debris Hazardous Remediation Waste

If the hazardous remediation waste is not a debris, or it is a hazardous debris that cannot meet the requirements for exclusion noted above, then it must be managed as a hazardous waste from the time of generation (i.e., removal from the ground) and treated and/or disposed of accordingly. Examples of hazardous remediation waste that are not considered debris include: decontamination water generated during site investigations, residual process waste from a pre-RCRA surface impoundment or landfill and residuals from the treatment of remediation waste. There are a number of options available for the initial management and storage of hazardous remediation debris, some of which (e.g., staging piles and CAMUs) are not available for managing hazardous process waste. The various storage, treatment and/or disposal options for hazardous remediation waste are discussed in Section 3.3 of this Appendix.

3.3 Options for the Management and Disposal of Hazardous Remediation Waste

If a remediation waste has been characterized and is known to be a hazardous waste, or there is reason to believe that an uncharacterized remediation waste will be hazardous, there are a number of options available for the management, treatment, and disposal of remediation waste. The management options include:

- containerization (drum or roll-off dumpster), storage and possibly treatment in a generator or permitted hazardous waste storage unit until off-site disposal;
- storage or storage/treatment in a generator or permitted storage tank, drip pad or containment building;
- storage/treatment in a wastewater treatment unit;
- storage in a Staging Pile;
- storage, treatment and/or disposal in a RCRA Corrective Action Management Unit (CAMU);
- storage and/or treatment in a Temporary Unit (TU).

The various storage, treatment and/or disposal options for hazardous remediation waste are discussed below in order of increasing regulatory complexity and oversight. Table A3-1 identifies the hazardous waste remediation disposal options discussed in this section and summarizes the requirements for implementation of each option.

3.3.1 Generator 90-Day Storage and Treatment

Generator Storage

The simplest method for managing hazardous remediation waste is to containerize the waste as it is generated (i.e., removed from the ground or discarded), store it temporarily in a generator storage area, and then ship the waste off-site for treatment and/or disposal. Under 6 CCR 1007-3 Section 262.34(a), a generator may accumulate (and store and treat) hazardous waste on-site for 90 days or less without a RCRA permit or without having RCRA interim status provided the waste is placed in a container, tank, drip pad, or containment building. The generator storage areas are also known as 90-day accumulation or storage units. At the end of the 90-days, the generator must ship the waste off-site for treatment and/or disposal.

The generator storage unit with the least onerous regulatory requirements is the container storage unit since the generator need only comply with the requirements of Subpart I (use and management of containers), AA (air emission standards for process vents) and BB (air emission standards for equipment leaks) of 6 CCR 1007-3 Part 265. Note that the requirements of Subpart CC (air emission standards for tanks, surface impoundments and containers) of 6 CCR 1007-3 Part 265 do not apply to a waste management unit that is used solely for on-site treatment or storage of hazardous remediation waste that is placed in the unit as a result of implementing remedial activities. Essentially, the regulations require the generator to accumulate remediation waste in containers that are in good condition and compatible with the waste. The containers must be kept closed/covered when not in use and not handled in a manner that may rupture the container or cause a leak. There are no requirements for secondary containment, but the prudent generator will provide some sort of secondary containment to minimize the potential for release in the event of a leak. As defined in 6 CCR 1007-3 Section 260.10, a container means any portable device in which material is stored, transported, treated, disposed of, or otherwise managed. This definition extends to steel, plastic or fiberboard drums or boxes, tank trucks or trailers, wheeled or portable “frac tanks” and roll-off dumpsters.

For the remaining types of units available for generator storage, the generator must comply with the requirements of the 6 CCR 1007-3 Part 265 Subpart applicable to that unit. The 6 CCR 1007-3 Part 265 Subpart requirements applicable to tanks (Subparts J, AA, BB and CC), drip pads (Subpart W) and

containment buildings (Subpart DD) are considerably more complex than the requirements for containers and include the need for certified engineered designs for the unit and secondary containment and written operating and inspection procedures at a minimum. The facility should contact the Department for guidance prior to beginning operation of one of these types of generator 90-day units.

Generator Treatment

It is possible for a generator of hazardous waste to save a considerable amount of money by performing treatment of their hazardous waste prior to off-site treatment and/or disposal. Each of the generator storage units described above can also be used for the treatment of hazardous waste without first getting a hazardous waste permit.

The term treatment means any method, technique, or process, including neutralization or incineration, designed to change the physical, chemical, or biological character or composition of a hazardous waste, so as to neutralize such waste or render such waste less hazardous, safer for transport, amenable for recovery or reuse, amenable for storage, or reduced in volume.

Under 6 CCR 1007-3 Part 100.10(a), a generator may perform the following types of treatment activities without a hazardous waste permit and with little or no interaction with the Department prior to conducting the treatment:

- owners or operators of totally enclosed treatment facilities as defined in 6 CCR 1007-3 Section 260.10;
- generators adding absorbent material to a waste container or adding waste to absorbent material in a container provided that these actions occur at the time the waste is first placed in the container
- owners or operators of elementary neutralization units as defined in 6 CCR 1007-3 Section 260.10;
- owners or operators of wastewater treatment units as defined in 6 CCR 1007-3 Section 260.10 (see Section 3.3.3 below); and
- Conditionally Exempt Small Quantity Generators treating their own waste (6 CCR 1007-3 Section 261.5).

There are two additional ways that generators may treat their own waste without going through the entire RCRA permitting process. First, under 6 CCR 1007-3 Section 268.7(a)(5), generators who treat their own waste only to meet the land disposal restrictions are not required to obtain a permit. Second, generators may treat their own waste under the permit by rule provisions of 6 CCR 1007-3 Section 100.21(d). However, both of these methods require interaction with the Department in the form of notifications and submittal of waste analysis plans prior to conducting the treatment activities. See the Department's guidance document titled "Treatment of Hazardous Waste by Generators", Second Edition, April 2000 for a detailed description of the options available for generator treatment and the requirements that must be met for each generator treatment option. Although these two options may have been developed with the treatment of waste products in mind, they are also used to treat remediation wastes to a) comply with the land disposal treatment standards, b) treat remediation wastes so that they are no longer hazardous wastes, and c) to treat contaminated environmental media to the extent necessary to obtain a contained-out determination. For example, soil contaminated with listed hazardous waste constituents is treated in a roll-off box using vapor extraction. The treatment, performed in accordance with a waste analysis plan, is successful and a contained-out determination is made, thereby allowing the soil to be transported off-site for disposal at a local solid waste landfill.

3.3.2 RCRA Permitted Storage, Treatment or Disposal Units

If the generating facility happens to already operate a RCRA permitted unit such as a container storage area or tank system that is capable of storing and/or treating the remediation waste, then this would likely be the most appropriate option for managing the hazardous remediation waste until treatment and/or

disposal is accomplished. However, if the generating facility does not have a RCRA permit, then it is not likely to be cost-effective or time efficient to try and obtain a RCRA permit since there are other options such as CAMU or Remedial Action Plans that are easier to implement.

3.3.3 Wastewater Treatment Storage and Treatment Units

A very important option for the storage, treatment and disposal of liquid hazardous remediation waste (decontamination fluids, highly contaminated ground water from well purging, etc.) is regulated under the wastewater treatment unit exemption. Under 6 CCR 1007-3 Section 100.10(a)(6), the owner or operator of a wastewater treatment unit as defined in 6 CCR 1007-3 Section 260.10 is specifically excluded from the RCRA permit requirements. A wastewater treatment unit is defined as a device which:

- is part of a wastewater treatment facility that is subject to regulation under either Section 402 or Section 307(b) of the Clean Water Act; and
- receives, treats, or stores an influent wastewater that is a hazardous wastes, or generates and accumulates a hazardous wastewater treatment sludge, or treats or stores a hazardous wastewater treatment sludge; and
- meets the Section 260.10 definition of tank or tank system.

The first requirement limits the exemption to those wastewater treatment systems that are subject to regulation under a National Pollution Discharge Elimination System (NPDES) permit, a Colorado Discharge Permit System (CDPS) permit, or which are subject to regulation under the Clean Water Act (CWA) pretreatment requirements that apply to dischargers to publicly owned treatment works. The Department generally defines the term wastewater to mean wastes that have a water content of at least 90% by weight and contain less than 1% total organic carbon and less than 1% by weight total suspended solids. The term tank means a stationary device designed to contain an accumulation of hazardous waste that is constructed primarily of non-earthen materials (e.g., wood, concrete, steel, plastic) that provide structural support. A tank system means the tank plus its associated ancillary equipment and containment system.

Under 6 CCR 1007-3 Section 264.1(g)(6), a facility can store and treat a liquid hazardous remediation waste on-site in a tank system without a RCRA permit and without meeting the Part 264 minimum technology standard for tanks as long as the discharge from the wastewater treatment system is permitted under NPDES or CDPS, or is regulated by the CWA pretreatment requirements. See the Department's "Guide to Implementing the Division's Wastewater Treatment Unit Policy", First Edition, January 2000.

3.3.4 Storage in a Staging Pile

The Hazardous Waste Identification Rule established a new type of unit called a staging pile specifically for the short term, land-based storage of hazardous remediation waste. As defined in 6 CCR 1007-3 Section 260.10, staging pile means an accumulation of solid, non-flowing remediation waste that is not a containment building and that is used only during remedial operations for temporary storage at a facility. Staging piles must be designated by the Department Director in a RCRA operating or post-closure permit (including a Remedial Action Plan under 6 CCR 1007-3 Section 100.27), a Closure Plan, a Compliance Order on Consent, or Unilateral Order in accordance with the requirements of 6 CCR 1007-3 Section 264.554. The most important distinction of a staging pile is that it is not considered a land disposal unit, and as such, the hazardous remediation waste stored in a staging pile is not subject to the RCRA land disposal restrictions. In addition, a staging pile may be used to consolidate hazardous remediation waste from other areas of the facility that are not contiguous to the unit.

A staging pile cannot be used for treatment or disposal, but can be used for storage of a hazardous remediation waste for up to two (2) years, with an opportunity for on 180-day extension. There are no minimum technology requirements specified for a staging pile. Instead, the design and operation and

closure of a staging pile must meet the performance criteria specified in 6 CCR 1007-3 Section 264.554(d) through (k), and the staging pile must be clean closed. The design drawings and specifications, engineering studies and technical data submitted to support the staging pile designation must be certified by an independent, qualified, registered professional engineer. The staging pile does not have to comply with the ground water monitoring requirements of 6 CCR 1007-3 Section 264.91 through 100 since it is not a surface impoundment, waste pile, land treatment unit or landfill.

If the facility operating the staging pile is a remediation waste management site that does not also operate units that are subject to traditional RCRA permitting requirements, then under 6 CCR 1007-3 Section 261.1(j), the requirements of Part 264, Subparts B (General Facility Standards), C (Preparedness and Prevention), and D (Contingency Plan and Emergency Procedure) and the corrective action for solid waste management units requirements of 264.101 do not apply. Instead, the owners or operators of the staging pile must meet the requirements of 6 CCR 1007-3 Section 264.1(j)(1) through (13). The facility should contact the Department prior to selecting the staging pile option for management of hazardous remediation waste in order to obtain guidance regarding the type of information that must be submitted to allow formal designation of this unit.

3.3.5 Storage, Treatment and/or Disposal in a RCRA Corrective Action Management Unit

The Corrective Action Management Unit (CAMU) is a RCRA unit specifically intended for the treatment, storage and/or disposal of hazardous remediation waste. As defined in 6 CCR 1007-3 Section 260.10, a CAMU means an area within a facility that is used only for managing remediation wastes for implementing corrective action or cleanup at the facility. A CAMU is typically similar to a RCRA land-based unit such as a surface impoundment, waste pile, land treatment unit or landfill and may be located within a RCRA permitted or interim status unit undergoing closure, an area of the facility that is already contaminated, or in an uncontaminated area of the facility. In order to create a CAMU, the owner/operator submits documentation to the Department Director that describes how the CAMU will be designed, operated and closed in accordance with the criteria in 6 CCR 1007-3 Section 264.552. Once the criteria are satisfied, the CAMU is designated by the Department Director in a RCRA operating or post-closure permit (including a Remedial Action Plan under 6 CCR 1007-3 Section 100.27), a Closure Plan, a Compliance Order on Consent, or Unilateral Order in accordance with the requirements of 6 CCR 1007-3 Section 264.552.

There are several key advantages of using a CAMU for the management of hazardous remediation waste including:

1) placement of remediation waste in a CAMU (including final disposal) does not constitute land disposal of hazardous waste, and as such, the hazardous remediation waste is not subject to the RCRA land disposal restrictions. This means that the remediation waste can be generated (removed from the ground), treated on-site, and placed back on the ground in the CAMU.
2) the design and operation of the CAMU does not have to meet the minimum technology requirements for RCRA land-based units. Instead, they have to meet the design, operating, closure and post-closure performance standards specified in 6 CCR 1007-3 Section 264.552.
3) the CAMU regulation does not specifically require compliance with the ground water monitoring requirements of 6 CCR 1007-3 Section 264.91 through 100. However, the Department Director may require ground water monitoring for a CAMU if it is deemed necessary to protect human health and the environment.
4) the CAMU may be used to consolidate hazardous remediation waste from other areas of the facility that are not contiguous to the CAMU.

One example of the use of a CAMU would be at an operating wood treating facility where the surface soil throughout the site was highly contaminated with pentachlorophenol and polyaromatic hydrocarbons

from releases of wood treating solutions. The contaminated soil would likely be characterized as a listed hazardous waste (F027 or F032) since it was mixed with a listed hazardous waste. The cost of removing the surface soil and disposing of it off-site could be quite high. It is possible to treat pentachlorophenol contaminated soil to non-hazardous levels using land farming techniques, but this would typically trigger the need for a RCRA permitted land treatment unit. However, since the contaminated soil is a remediation waste, the facility could request that a portion of the site be designated a CAMU for the consolidation and land treatment of the contaminated soil throughout the facility without having to meet the minimum technology standards for land treatment units specified in Part 264, Subpart M.

When hazardous remediation wastes are placed in a CAMU, the CAMU must comply with the requirements of Part 264, Subparts B (General Facility Standards), C (Preparedness and Prevention), D (Contingency Plan and Emergency Procedure) and E (Manifest System, Record keeping, and Reporting). The Department has a strong preference that a CAMU be used to facilitate treatment of hazardous remediation waste prior to final disposal (either off-site or within the CAMU), but treatment is not an absolute necessity. If hazardous remediation waste is to remain in place after closure of a CAMU, the CAMU must to comply with the regulations for the siting of hazardous waste disposal sites in 6 CCR 1007-2 Part 2. The facility should contact the Department prior to selecting the CAMU as their preferred option for management of hazardous remediation waste in order to obtain guidance regarding the type of design and operation information that must be submitted to allow designation of the CAMU.

3.3.6 Storage and/or Treatment in a RCRA Temporary Unit

Temporary Units (TUs) are also specific types of RCRA units created specifically for the management of remediation waste. However, TUs are non-land based units (container storage or tank unit) used for the storage and/or treatment of hazardous remediation waste. TUs may operate for one year, with an opportunity for a one year extension. As with CAMUs, a TU must be designated by the Department Director in a RCRA operating or post-closure permit (including a Remedial Action Plan under 6 CCR 1007-3 §100.27), a Closure Plan, a Compliance Order on Consent, or Unilateral Order in accordance with the requirements of 6 CCR 1007-3 §264.553.

The major advantage of using a TU container storage instead of a generator container storage unit is that a TU may be designated for one year, with an opportunity for a one year extension, rather than the 90-days allowed for a generator container unit. The major advantage of a TU container storage area over a RCRA permitted storage area is that the Department Director may modify the standard minimum technology design, operating and closure standards that normally apply to a permitted hazardous container storage area provided they are replaced with alternative requirement that are protective of human health and the environment. The advantage of the increase in time from 90-days to up to two years also applies to TU tank storage/treatment versus generator tank storage/treatment and the ability to modify the minimum technology requirements for tank storage applies to both generator and RCRA permitted tank storage/treatment.

4.0 Summary

The Department believes that contaminant characterization and remedy selection and implementation at RCRA corrective action facilities should be based on sound science, engineering practices and what is the best for the protection of human health and the environment. Site cleanup should not driven by the regulatory roadblocks and financial burdens associated with the management of remediation wastes as long as the continued protection of human health and the environment is assured. The Department is committed to helping facilities employ the hazardous remediation waste regulations and policies described in this Appendix to achieve clean up goals as quickly and efficiently as possible.

Flowchart A3-1 Management Of Remediation Waste

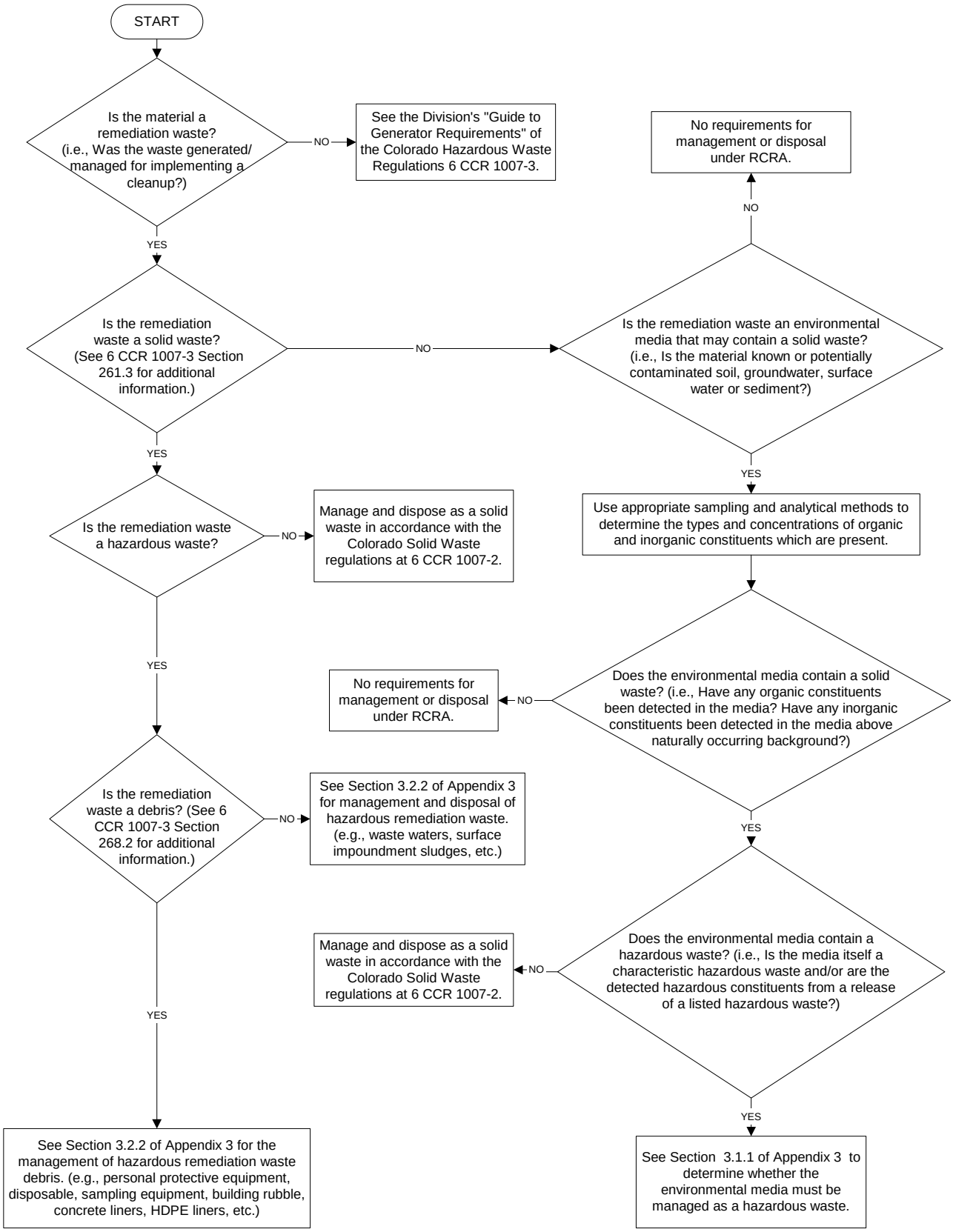

Table A3-1 Desired Management Method For Hazardous Remediation Waste

DESIRED MANAGEMENT METHOD FOR HAZARDOUS REMEDIATION WASTE	Generator Accumulation Unit	Wastewater Treatment Unit	Staging Pile	Corrective Action Management Unit	Temporary Unit
Advance Agency Approval Required	NO[1]	YES[2]	YES	YES	YES
Use Container Unit for Treatment or Storage **Time Limit on Treatment/Storage -** **Must Meet Part 265, Subpart I requirements at a minimum –**	YES 90-DAYS YES	NO N/A N/A	NO N/A N/A	NO N/A N/A	YES 1 YEAR[3] NO
Use Tank Unit For Treatment or Storage **Time Limit on Treatment/Storage -** **Must Meet Part 265, Subpart J requirements at a minimum –** **Must Meet Part 264 Subpart J requirements at a minimum –**	YES 90-Days YES NO	YES NONE NO NO	NO N/A N/A N/A	NO N/A N/A N/A	YES 1 YEAR[3] NO NO
Use Land-Based Unit for Treatment, Storage, or Disposal **Time Limit**	NO N/A	NO N/A	YES 2 YEARS[4]	YES NONE	NO N/A
Consolidate Hazardous Remediation Waste from Different Units at the Facility	YES	YES	YES	YES	YES
Subject to RCRA Land Disposal Restrictions	N/A	NO	NO	NO	N/A

Notes:

1. 30 day prior notification required, in accordance with 6 CCR 1007-3, § 100.21(d).
2. Discharge from wastewater treatment unit must be permitted under Section 402 or 307(b) of the Clean Water Act or State of Colorado equivalent.
3. There is an opportunity for a TU to be granted one extension for an additional year.
4. There is an opportunity for a Staging Pile to be granted one extension of 180-days.

APPENDIX 4 CONTACT INFORMATION

24-hour Spill Reporting and Emergency Assistance **State-wide toll-free**	(877) 518-5608
Hazardous Materials and Waste Management Division	(303) 692-3300
(toll-free)	(888) 569-1831
HMWMD Technical Assistance Line	(303) 692-3320
(toll-free)	(888) 569-1831 ext. 3320
HMWMD Website	www.colorado.gov/cdphe/hm
HMWMD E-mail	comments.hmwmd@state.co.us

Send questions in writing to:

Colorado Department of Public Health and Environment
Hazardous Materials and Waste Management Division
4300 Cherry Creek Drive South
Denver, CO 80246-1530
Attn: Walter Avramenko

OR

FAX (303) 759-5355

Please provide as much detail as possible regarding your question and the waste or process to which it applies.