PROCESS DESCRIPTION

ATTACHMENT 8

Pueblo Chemical Depot

Pueblo, Colorado

ATTACHMENT 8
PROCESS DESCRIPTION

8-1 OVERVIEW

The Explosive Destruction System (EDS) operation consists of two EDS waste processing units in Environmental Enclosures, to be added sequentially, plus a concrete support pad for a potential third EDS unit, which if needed, will require a Class 3 permit modification as per 6 CCR 1007-3 §100.63(c). Three permitted hazardous waste storage units and two hazardous waste treatment units are located at the EDS Site: Container Storage Units (CSUs) H1102, H1103, a Roll-off Container Storage Area adjacent to H1103, and two EDS units in Environmental Enclosures. CSUs H1102, H1103, and a Roll-off Container Storage Area adjacent to H1103 will be located at the Pueblo Chemical Agent-Destruction Pilot Plant (PCAPP) EDS site. CSUs H1102 and H1103 are existing earth-covered concrete storage igloos comprising four walls (one with a door), floor, and ceiling. CSU H1102 stores agent wastes prior to treatment in the EDS units and CSU H1103 will be used to store wastes that have been treated in the EDS units prior to offsite shipment to permitted treatment, storage, and disposal facilities. The EDS units treat/destroy overpacked munitions, Department of Transportation (DOT) cylinders, and other miscellaneous items (ignition cartridges, propellant) currently stored at Pueblo Chemical Depot (PCD) that contain mustard agents (distilled sulfur mustard [HD]/mustard-T mixture [HT]).

An EDS is a transportable system designed to safely treat/destroy munitions and other items that contain chemical agent fills with or without energetic components. The system uses explosive shaped charges to detonate a munition burster, if present, and breach the munition/item wall, exposing the chemical fill all inside a Containment Vessel. Once the chemical fill is exposed, monoethanolamine (MEA) is added along with steam heat and rotation (agitation) to treat the chemical fill and explosive residues. After the chemical fill is treated, and the treatment level confirmed, the resulting neutralent is drained into a liquid waste container, and the Containment Vessel is rinsed. After the rinsate is drained into a waste container, the vessel is purged with nitrogen and a headspace vapor sample is collected; once the vapor concentration is less than 1 vapor screening level (VSL), the Containment Vessel door is opened. Solid waste materials are then manually removed from the Containment Vessel, placed in appropriate solid waste containers, and the waste container's headspace monitored for chemical agent. EDS wastes not meeting the headspace testing requirement of less than 1 VSL will be retreated until passing. All wastes

are then stored pending shipment to an offsite permitted treatment, storage, and disposal facility for further treatment or ultimate disposal.

The EDS units will treat/destroy overpacked munitions, DOT bottles,[1] and other miscellaneous items (ignition cartridges, propellant) currently stored at PCD that contain mustard agents (HD/HT).

Both CSUs are existing earth-covered concrete storage igloos, designed to store energetic munitions. CSU H1102 will be used to store items pending treatment in an EDS. The overpacked munitions and miscellaneous agent-containing or agent-contaminated items may or may not contain energetics. CSU H1103 will store segregated liquid and solid hazardous wastes generated from the EDS treatment operations and site support activities. The Roll-off Container Storage Area will also store solid hazardous wastes derived from EDS operations.

For the EDS permitting purposes, current Resource Conservation and Recovery Act (RCRA) units in this Permit relevant to the EDS include the following:

- Two EDS units (Phase 2 Unit R [P2R] and Phase 2 Unit A [P2A]) with Environmental Enclosures on concrete pads No. 1 and No. 3, respectively. The pads are numbered from left to right, facing north. The No. 2 pad will support the use of a third EDS unit if necessary. A Class 3 permit modification will be required to add the unit.

- Two CSUs, H1102 for EDS waste to be treated and H1103 for EDS-derived, containerized liquid and solid wastes.

- One Roll-off Hazardous Waste Storage Area consisting of two metal 25 cubic yard roll-offs with Roll-off No. 1 to the west and Roll-off No. 2 to the east on the concrete pad to the east of CSU H1103.

- Five existing Hazardous Waste Storage Igloos (magazines) for leaking munitions and DOT bottles located in G-Block.

[1] DOT bottles may or may not be in overpacks.

This section presents a general overview of the EDS treatment process. Physical descriptions and other information on the CSUs and EDS units are provided in **Appendix 8-1** and **Attachment 8-11** of this Permit modification, respectively. A pre-operational inspection will be conducted prior to operations and include, at a minimum, the following: EDS vessel; neutralent, water, waste transfer systems; secondary containment systems; mechanical handling equipment; audio and video equipment; Personnel Decontamination Station; emergency response equipment; air monitoring systems; boiler chiller system; emergency generators; cascade air and Air Filtration Systems (AFSs); air compressor; Environment Enclosure ventilation and temperature; and hazardous waste areas. Documentation for completion of the inspection will be maintained in the site Operating Record.

The site will also meet minimum Limiting Conditions of Operation (LCOs) each day prior to operations. Documentation of daily compliance with LCOs will be completed and signed off by the Recovered Chemical Materiel Directorate (RCMD) Site Manager and Edgewood Chemical Biological Center (ECBC) Supervisor prior to receiving waste munitions and/or other wastes to be treated in the EDS units. The LCO documentation will be retained as part of the site Operating Record.

8-2 EDS FLOW PROCESS

A simplified block flow diagram of the EDS operation is presented in **Figure 8-1**.[2]

8-2a PCAPP EDS Site Operations

PCAPP EDS site operations will follow procedures 1 through 19, including Annexes A-L of Standing Operating Procedure for Explosive Destruction System Phase 2 Steam Series Units Final Rev 1, U.S. Army Chemical Materials Activity, December 1, 2014, in **Attachment 9** of this Permit. Overpacked munitions, DOT bottles, and other miscellaneous items that contain or are contaminated with mustard agent (HD/HT) will be transferred from the PCD storage area (G-Block Chemical Limited Area [CLA]) to CSU H1102 at the EDS site for storage, pending treatment. CSU H1102 will hold up to a maximum of 300 munitions and DOT bottles. Each EDS unit can be operated to treat one or more munitions or items simultaneously. Treatment configurations may include one to six or more munitions or other chemical-agent items in each EDS unit per one 24-hour process cycle, provided the net explosive weight (NEW) does not exceed 9 pounds trinitrotoluene (TNT) equivalent.

---

[2] All figures are located at the end of this attachment.

Table 8-1[3] identifies the chemical fill, associated treatment reagent, and treatment level for EDS operations at the EDS site.

A brief discussion of the EDS operational steps follows.

8-2a(1) Staging Munitions and Other Items

Overpacked munitions and other items slated for EDS treatment will be transported from the PCD permitted storage igloos directly to an Environmental Enclosure for EDS processing or to CSU H1102 for temporary storage in accordance with **PCD SOP PU-0000-M-486**. If transported directly to an Environmental Enclosure, only the amount that will be treated that day will be delivered to the enclosure, including the associated required donor charges.

The munitions and miscellaneous items in overpacks and containers, respectively, will be unpacked. If the overpack or packing material is agent-contaminated either known through documentation or by headspace monitoring results of greater than 1 VSL, the material will be decontaminated following procedures in Annex I, Decontamination/Disposal of Overpacks, Packaging Material, and Personal Protective Equipment, of the Standing Operating Procedure (SOP) for EDS Phase 2 Steam Series Units Rev 1 December 1, 2014 (see **Attachment 9** of this Permit). Dunnage will be placed in containers, held for 4 hours at 70°F, then monitored. If the wastes have a headspace less than 1 VSL, the wastes are transferred to CSU H1103 or the roll-off for storage and ultimate shipment to an appropriate treatment, storage, and disposal facility. EDS-related dunnage wastes found to be greater than 1 VSL must be further treated to achieve a less than a VSL. Wastes which cannot achieve a less than 1 VSL will not be transferred to H1103 and must be transferred back to H1102 or other PCD Igloo with carbon filter controls for eventual offsite shipment and disposal.

[3] All tables are located at the end of this attachment.

The Permittees are limited to staging in the Environmental Enclosure only those wastes that can be treated during the ensuing 24-hour treatment period with the understanding that the EDS will be operated on a one treatment per 24-hour cycle.

MINICAMS® will be calibrated per the required maintenance schedule. Calibrations and results of dunnage headspace testing will be recorded in the Operating Record. The dunnage headspace record will include, at a minimum: the date, time of testing, unique test number related to the items treated, numbers of items and types treated, testing results, tester printed name, and tester signature.

The Environmental Enclosure will be sealed; i.e., doors and any other openings closed with the AFS in operation, whenever there are staged items to be treated, any EDS-derived wastes in containers are present within the Environmental Enclosures, and/or any EDS operations are occurring, including but not limited to, operations, cleaning, and maintenance.

When overpacked munitions are unpacked in the Environmental Enclosure, contaminated overpacks or single round containers (SRCs) will be decontaminated following the procedures detailed in Annex I, Decontamination/Disposal of Overpacks, Packing Material, and Personal Protective Equipment, of the SOP for EDS Phase 2 Steam Series Units Rev 1 December 2014 in **Attachment 9** of this Permit.

8-2a(2) Place Item(s) in Advanced Fragment Suppression System (AFSS) and Attach Explosive Shaped Charges

Depending on the types and numbers of items being treated, the items to be processed will be put into an expendable metal holder then placed inside the reusable AFSS with expendable steel rods.

The framework of the expendable metal holder serves to connect, hold, and align explosive charges that open the main body of items being treated to expose chemical fill. The AFSS serves to protect the Containment Vessel interior from the high velocity fragments resulting during detonation of shaped charges and munitions (or other agent-contaminated energetics) and is shown in **Figure 8-17**, AFSS. In addition, the explosive shaped charges also serve to detonate any explosive components.

Once shaped charges are attached, a final detonator connection is made; then the Containment Vessel door will be closed and sealed.

8-2a(3) Annular Space Vacuum Decay Rate and Periodic Helium Leak Check

There are two required periodic checks of each EDS unit door area (1) a vacuum decay rate check of the annular space between the Containment Vessel metal door seal and the door ethylene propylene diene monomer (EPDM) O-ring and (2) two helium leak checks that involve pressurizing the Containment Vessel with helium and then using the helium detector to monitor for the presence of helium external to the metal seal and internal of the O-ring for the door and separately, the door-mounted, high voltage feedthrough flange. Each check type is implemented on a different frequency. The vacuum decay rate test is conducted prior to every detonation batch for each EDS unit. The helium leak test is only conducted prior to each of the first 36 detonations in a new Containment Vessel and then every proceeding 28th detonation after the last helium leak check was performed on both new (P2A) and existing, refurbished (P2R) EDS units. The vacuum decay rate check is conducted to ensure the integrity and adequacy of the vessel door seals. The helium check is used to more stringently confirm the integrity of the vessel seals, both the door seals and the high voltage feedthrough flange. The annular space vacuum decay rate and helium leak checks will be completed through Procedure 8 of the SOP for EDS P2 Steam Series Units Rev 1 December 2014, **Attachment 9** of this Permit.

Vacuum Decay Rate Check

After the Containment Vessel door is closed, the helium leak detector is used to check the adequacy of the Containment Vessel door seals using the integral vacuum gauge function per Procedure 8 in the SOP for EDS P2 Steam Series Units Rev 1 December 2014, **Attachment 9** of this Permit. The helium leak detector is attached to the Containment Vessel door vacuum flange port to monitor the annular space vacuum and an integral mechanical vacuum pump is used to create a vacuum between the Grayloc® door seal and the EPDM O-ring to the Containment Vessel. The vacuum decay rate checking is determined by the stability of the annular space vacuum reading (up to 5 minutes until display figures stabilize), which is shown on the digital display of the helium leak detector and verified by two personnel. If the leak detector reading will not stabilize after 5 minutes, ECBC will take action as directed in accordance with Table F-1, EDS Annular Space Guidance Chart, in Annex F, Annular Space Vacuum and Helium Leak Rate Decision Matrix of the SOP for EDS Phase 2 Steam Series Units Rev 1 December 2014, **Attachment 9** of this Permit. The EDS unit, detonation number, date, operators, as a minimum, will be

recorded as part of the Operating Record. In the event of a vacuum decay rate check sustained failure following this procedure, mitigating steps will be recorded for the site Operating Record.

Helium Leak Check

Helium is injected under pressure (20 to 25 pounds per square inch gauge [psig]) into the Containment Vessel. Helium leakage into the annular space between the door EPDM O-ring and door metal seal is measured (normal test mode) using the helium leak detector instrumentation per Procedure 8 in the SOP for EDS P2 Steam Series Units Rev 1 December 2014, **Attachment 9** of this Permit. A separate helium leak check is performed on the high-voltage feedthrough flange metal seal and O-ring annulus on the same schedule as the door seal. Containment Vessel pressure is verified via observation of the pressure indicator on the Containment Vessel control panel. Leak rate to be recorded is observed on the leak detector when the display numerical value reaches equilibrium, which can take up to 5 minutes. Two personnel will verify helium leak rate reading and record. Per Table F-2, EDS Helium Leak Rate Guidance Chart, of Annex F of the SOP for EDS Phase 2 Steam Series Units Rev 1 December 2014, **Attachment 9** of this Permit, a value of 2×10^{-3} cubic centimeters per second or below is acceptable to proceed with the detonation. Above this value, a decision to proceed or not is required per Table F-2, EDS Helium Leak Rate Guidance Chart, of Annex F of the SOP for EDS Phase 2 Steam Series Units Rev 1 December 2014, **Attachment 9** of this Permit. If this decision to proceed is taken, the mitigating steps to be taken will be documented in the site Operating Record and the Colorado Department of Public Health and Environment (CDPHE) will be verbally notified or notified via e-mail of the occurrence. When a helium leak check is performed, parameters, acceptance criteria, and results as a minimum will be recorded in the Operating Record. Calibration of the vacuum equipment and the helium leak detector as required by the manufacturer and Operations and Maintenance Manual will be a part of the Operating Record. The Permittees must be able to demonstrate the proficiency of these tests (vacuum decay rate and helium leak) upon request of CDPHE during an inspection.

8-2a(4) Access Item and Destroy Burster (If Present)

Preconditions in Procedure 9 of the SOP for EDS P2 Steam Series Units Rev 1 December 2014 **Attachment 9** of this Permit, will be completed prior to detonation.

Once the seal is confirmed, the firing system is used to remotely and simultaneously initiate the shaped charges, accessing the chemical fill and causing the burster, if present, to detonate. A post-detonation helium leak check is performed only when the helium leak check performed before detonation was above 2×10^{-3} cubic centimeters per second per Procedure 9 of the SOP for EDS P2 Steam Series Units Rev 1 December 2014, **Attachment 9** of this Permit and results recorded. If a misfire occurs, personnel will wait 30 minutes before approaching EDS.

8-2a(5) Treat Chemical Fill and Un-reacted Explosive Residues

Following detonation, a treatment reagent will be pumped/sprayed into the Containment Vessel using Procedure 10 of the SOP for EDS P2 Steam Series Units Rev 1 December 2014, **Attachment 9** of this Permit. Treatment reagent is a mixture of 90% MEA and 10% water heated in the supply tanks to 60°C ±5°C. The amount of MEA to be added initially will be sufficient to exceed a stoichiometric minimum according to Table 3-1, Standard EDS Treatments for a Chemical Fill, in the SOP for EDS P2 Steam Series Units Rev 1 December 2014, **Attachment 9** of this Permit, depending on the weight of agent present in the particular treatment batch, but will be a minimum of 133 liters. The Containment Vessel will be heated by injecting steam to the specified minimum temperature of 60°C ±5°C [140°F ±41°F]. Record initial weight of reagent/water container/tanks. The amount of reagent and water used will be recorded. The Containment Vessel will be rotated through 360 degrees at 1 revolution per minute (rpm) for 15 rotations (equivalent to 15 minutes) then directionally reversed for the same amount of rotations at the same rate and repeating to agitate the contents of the vessel, promoting contact mixing between the chemical fill and reagent for a complete reaction. The rotation time will be recorded. Agitation and heating will continue until chemical analysis indicates treatment level is attained. Containment Vessel temperature, pressure, amount of initial and total MEA used, mixing time, amount and types of items treated, estimated weight of energetics used (shaped charges and items to be treated), maximum energetic weight allowed per design, estimated weight of agent to be treated, number of repeat treatments if necessary, batch number, date, treatment start time, and treatment end time, at a minimum, will be monitored during the treatment process and recorded in the Operating Record. The printed name of the person recording the data, his or her signature, and date will be part of the Operating Record.

The product of treatment is termed “neutralent” and the term “treatment reagent” is applied to the treatment reagent liquids that react with the chemical fill for detoxification. A treatment reagent reacts with the chemical agent mustard to convert the chemical fill to less toxic products that are not classified as chemical warfare materiel (CWM). These products may still present hazards to personnel or the environment.

If the Containment Vessel liquids test result indicates that treatment is incomplete, treatment will continue. Additional MEA may be transferred into the Containment Vessel and steam will be introduced and the vessel rotated until analytical testing results reach treatment levels as specified in **Table 8-1**. The number of retreatments for a particular batch will be recorded for the Operating Record. Once the treatment level (**Table 8-1)** is achieved, liquid wastes (neutralent) will be drained from the Containment Vessel into a RCRA-labeled and covered liquid waste container.

8-2a(6) Sample Liquid Wastes (Neutralent)

The neutralent liquid sample will be collected using Procedure 11 of the SOP for EDS P2 Steam Series Units Rev 1 December 2014, **Attachment 9** of this Permit with the sampling equipment provided by Mobile Analytical Platform (MAP) personnel per the Laboratory and Monitoring Quality Control Plan, in **Attachment 3** of this Permit. Personnel performing the sampling will be fully trained in performing that procedure. When the treatment level is reached as indicated by analysis, RCRA characterization sampling and analysis will be conducted on each container of neutralent and each container of rinsewater wastes generated to establish a baseline for generator knowledge and to prepare waste profiles. Neutralent and rinsate wastes will be sampled, tested, and stored separately. Neutralent will be drained per Procedure 12 of the SOP for EDS P2 Steam Series Units Rev 1 December 2014, **Attachment 9** of this Permit. Thereafter, a liquid sample from every detonation batch will be collected from the Containment Vessel (see the Waste Analysis Plan [WAP], **Attachment 3** of this Permit) to confirm treatment is complete and/or to monitor the progress of the reaction. The onsite EDS site MAP laboratory will execute the chemical agent analytical tests and an offsite contract laboratory accredited by the National Environmental Laboratory Accreditation Program (NELAP) will be used for RCRA characterization sample analysis. All testing results and supporting information will be included as part of the Operating Record. When waste containers are full, they shall be sealed securely and moved promptly to storage. The Permittee will maintain a waste tracking system and make it available to CDPHE upon request, for all waste moved to CSU H1103 as part of the Operating Record.

8-2a(7) Rinse with Water and Steam

Following neutralent drain, a water rinse of a minimum of 45 liters (12 gallons) per Table 3-1, Standard EDS Treatments for Chemical Fill, in the SOP for EDS P2 Steam Series Units Rev1 December 2014, **Attachment 9** of this Permit is pumped/sprayed into the Containment Vessel. The water rinse will be done per Procedure 13 of the SOP for EDS P2 Steam Series Units Rev 1 December 2014, **Attachment 9** of this Permit. The Containment Vessel is heated by injecting steam to a specified minimum temperature of 100°C ±5°C [212°F ±41°F]. The Containment Vessel will be rotated to agitate (see paragraph 8-2a(5)) the contents of the vessel and maintained at a temperature of 100°C ±5°C for a minimum of 1 hour after temperature reaches 100°C setpoint time to ensure clearing of the vessel interior. After rotation for the required time, the Containment Vessel rinsewaters will be drained into Tank 3, cooled, and then transferred to a waste container.

Following the first rinsewater drain, a chilled water rinse of 133 liters minimum is pumped/sprayed into the Containment Vessel. The Containment Vessel is cooled to temperatures of 60°C ±5°C [140°F ±41°F]. After rotation for cooling, the rinsewater is drained directly into a RCRA-labeled and covered liquid waste container. Full containers will be sealed securely and moved promptly to storage.

8-2a(8) Flush Vapors and Sample Headspace

The Containment Vessel headspace will be flushed with nitrogen to the Environmental Enclosure AFS and then a headspace vapor sample will be collected from the vessel. The headspace vapor sample will be done using Procedure 14 of the SOP for EDS P2 Steam Series Units Rev 1 December 2014, **Attachment 9** of this Permit. Personnel performing the headspace vapor sampling will be fully trained in performing that procedure. Headspace testing results following nitrogen purge will be recorded in the site Operating Record. A normal headspace testing result for the purpose of opening the EDS Containment Vessel door is less than 1 VSL agent. For the purposes of this Permit Attachment, an Off-Normal Condition is defined as a Containment Vessel headspace test result concentration of greater than or equal to 1 VSL agent. The Permittees shall provide verbal or e-mail notification to CDPHE of an Off-Normal Condition before opening the Containment Vessel door. Notification will consist of the following information, at a minimum: Date, Occurrence Time, Occurrence Number, Headspace Concentration, Detonation Number, Number and Type of Wastes treated, Number of Shaped Charges used, any operating condition deviations (temp, press, reagent, treatment time, equipment failure or malfunction,

etc.). The Permittees may open the Containment Vessel door (using personal protective equipment [PPE] consistent with EDS operation SOPs) after providing CDPHE notification.

8-2a(9) Remove Solid Wastes

Once the headspace vapor concentration is determined to be less than 1 VSL, the Containment Vessel door will be opened using Procedure 15 of the SOP for EDS P2 Steam Series Units Rev 1 December 2014, **Attachment 9** of this Permit. Appropriate PPE will be in use. The solid wastes will be visually inspected for including, but not limited to, unexploded energetic material (fuzes, burster components, propellants, etc.) and solidified residual agent. Any unexploded energetic material or solidified residual agent will be removed and stored temporarily in CSU H1102 in a labeled and sealed 5-gallon container for retreatment in the next EDS detonation in conjunction with explosive ordnance disposal (EOD) personnel. Any of these items found will be documented as to type, along with a photograph w/scale in the site Operating Record. The non-energetic solid wastes will then manually be removed from the vessel, placed into a labeled and covered container for solid waste, and headspace monitored for chemical agent per ECBC Internal Operating Procedure (**IOP**) **MT-02**, Operation and Maintenance Procedures for Fixed Site MINICAMS (current version) or **ECBC IOP MT-11**, DAAMS Tubes Monitoring Procedures (current version) followed by **ECBC IOP MT-13**, Analysis of Chemical Warfare Agents and Degradation Products on DAAMS Tubes using Gas Chromatography System Coupled with a Mass Spectrometer Detector (GC/MS). These IOPs are included in **Attachment 10** of this Permit. If the solid wastes test greater than 1 VSL, then retreatment of the waste will occur to meet the less than 1 VSL level. When a solid waste container is full, it will be sealed and promptly moved to storage (H1103). A tracking system for generation and accumulation of wastes generated from the EDS units onsite and moved to H1103 will be available for inspection as part of the Operating Record.

All wastes stored in H1103 will be in United Nations (UN)-rated containers compatible with the wastes contained as determined by references such as DOT requirements, container compatibility charts provided by container manufacturers, and information presented in 6 CCR 1007-3 § 264 Appendix V regarding incompatible materials. These wastes will be stored in the permitted CSU H1103 and the Hazardous Waste Roll-off Storage Area depending on type classification (see **Table 8-3**, EDS Hazardous Waste Approved Storage Locations) pending shipment to a permitted treatment, storage, and disposal facility for further treatment and/or ultimate disposal. Procedure 16 of the SOP for EDS P2 Steam Series Units Rev 1 December 2014, **Attachment 9** of this Permit allowing EOD personnel to dispose of any unreacted energetic wastes is not permitted.

8-2a(10) Clean Containment Vessel and Rinse with Water

Once the solid wastes are removed, the Containment Vessel interior and door will be cleaned per standard operating procedures (Procedure 17 of the SOP for EDS P2 Steam Series Units Rev 1 December 2014, **Attachment 9** of this Permit) using general household bleach and/or detergent solution, followed by clean water rinse(s) to remove any remaining debris. This rinsewater will be collected from the vessel into a debris pan placed underneath the Containment Vessel. The rinsewater will then be transferred from the debris pan into a labeled and covered waste container. Any remaining solid materials will be placed into a labeled waste container.

8-2a(11) Prepare for Next Item(s)

Prior to treating subsequent chemical-filled items, the Containment Vessel interior and door will be cleaned per Procedure 17 of the SOP for EDS P2 Steam Series Units Rev 1 December 2014, **Attachment 9** of this Permit using household bleach, general-purpose detergent, or other designated cleaning fluid with **prior** approval of CDPHE, and then the interior wall of the vessel, its sealing surface, and its door will be visually inspected for damage and/or excessive wear. Damage and/or excessive wear as determined visually or by cycles completed as well as follow-on EDS-related equipment repair/replacement will be recorded in the Operating Record. The Containment Vessel door metal seal and O-ring will be replaced after each operation and will be recorded in the Operating Record. Following visual inspection, the electrical connection feedthroughs will be replaced as necessary. Inspection and any necessary replacement will be recorded in the Operating Record.

8-3 WASTE MANAGEMENT

Liquid and solid wastes generated from the EDS treatment operation will be transferred to CSU H1103 for storage, pending shipment offsite to a permitted treatment, storage, and disposal facility for further management. Types and amounts of liquid and solid waste generated and stored will be recorded in the Operating Record.

A detailed description of the waste streams, including applicable waste codes, is presented in **Attachment 3**, Waste Characteristics and Waste Analysis Plan, of this Permit.

8-4 UTILITIES AND SITE SUPPORT EQUIPMENT AT PCAPP EDS SITE

A description of utilities and site support equipment is provided in **Appendix 8-1**.

8-5 CONTAINERS [6 CCR 1007-3 § 264 Subpart I]

There will be three permitted hazardous waste storage areas at the EDS site located at PCD. Two of these areas are CSU H1102 and CSU H1103, and the third is a metal Roll-off Container Storage Area.

CSU H1102 will be used to store overpacked munitions and contaminated energetics from the PCD. DOT bottles and other miscellaneous items (ignition cartridges, propellant, contaminated bursters) that contain or are contaminated with mustard chemical agents (HD/HT) pending treatment in the EDS units. CSU H1102 is permitted for liquid and solid hazardous wastes. CSU H1102 is located within the fenced area of the EDS site. **Figure 8-2** shows an exterior schematic view of the CSU; **Figure 8-3** shows interior storage arrangement. Overpacked wastes will be transferred to H1102 using **PCD SOP PU-0000-M-486**.

CSU H1103 will store treated liquid and solid waste generated from the EDS treatment process and site support activities that do not possess headspace concentrations greater than or equal to 1 VSL and is located outside the EDS fence line, east of CSU H1102 but still within the secured fence line of PCD. **Figure 8-4** shows an exterior view of CSU H1103; **Figure 8-5** shows interior storage configuration.

Each CSU is an existing earth-covered concrete storage igloo comprised of concrete measuring approximately 25 feet wide by 80 feet long by 12 feet 9 inches high (at center point). The arched ceilings are constructed of #0 copper arch cables spaced approximately 20 feet apart. The igloos are covered with an asphalt coating, an earth fill, and a final gravel layer that stabilizes the fill. Each CSU is protected by an integral Lightning Protection System (LPS). At CSU H1102, there is one metal entry door with a fire damper control arm and two open-air vents, one located in the entry door for air intake, the other on the roof for air exhaust. Both vents exhaust through agent-adsorbing filters as detailed in the Permit.

CSU H1103 contains a roll-up door. A third waste storage area adjacent to CSU H1103 is a concrete pad area for two metal roll-off containers that will also store solid metal and non-porous hazardous waste that has been cleared to less than 1 VSL agent headspace. H1102, H1103, and the Roll-off Container Storage Area will be inspected on a weekly basis.

Each CSU floor slopes 1 inch every 15 feet toward the front of the igloo to drain liquids away from containment pallets used to store the wastes. Appropriately-sized for volume and load rating, containment spill pallets will be used to meet storage secondary containment requirements.

For CSU H1102, one plug will be fitted with sampling line connections that will allow personnel to perform chemical agent monitoring of the interior airspace from outside the igloo. No monitoring is required for CSU H1103 as the unit will only store wastes that are less than 1 VSL and wastes that do not contain or are contaminated with chemical agent mustard.

A carbon filtration system known as the Igloo Containment System (ICS) is attached to CSU H1102. The ICS consists of a front filter, a rear filter, controller for the igloo door air-inlet bypass damper, and seals for the igloo door, fire dampers, and drains. Gaskets and seals must be maintained in functional condition to perform as intended. The system allows the natural flow of air through the igloo to carry agent vapors in the event of a leak from inside the igloo, to carbon panel adsorbers, where the vapors are contained—if dampers are open. The system is equipped with a manual airflow bypass damper that is opened only if agent is detected in the igloo and a Mobile Igloo Filter (MIF) system is deployed. If a

chemical release is detected in CSU H1102, the ICS filter units will be tested between carbon banks to ascertain the condition of the front filter and determine the remaining filter lifespan and whether the filters should be replaced.

Igloo Front Door Filter

The front filter unit, containing two carbon 1x2-foot adsorber panels and one 1x2-foot prefilter, will be mounted on the inside of the igloo door as shown in **Figure 8-6.** Conservatively, based on filter performance calculations for chemical agent sarin (GB), the most volatile and toxic of the three chemical agents contained in the U.S. Army Chemical Materials Activity (CMA) stockpile, the adsorbers have a combined capacity to contain approximately one-half of a liter of mustard agent. Only mustard agent is stored at PCD and will be treated at the EDS site. The prefilter protects the adsorbers from fine particles that may pass through the insect screen located at the inlet vent and into the filter housing.

The filter unit was designed to allow in-place testing of the adsorbers from outside the igloo with the igloo door closed. Threaded couplings welded to the door exterior provide a means to connect challenge gas injection and sampling lines. Stainless steel piping extends from the various injection and sampling locations inside the filter housing to these couplings. The filters (front and rear) will be tested after each leak detection in H1102 and on an annual basis.

The filter unit adsorbers and prefilter may be bypassed by opening a bypass damper that has been integrated into the filter housing unit. Engaging an actuator handle into a female coupler at the door exterior and rotating, causes a damper shaft to rotate, thereby opening the bypass damper. In the event a chemical release occurs inside the igloo, a mobile 1,000 cubic feet per minute (cfm) carbon filter system (MIF) is connected to the rear fire damper maintenance access door opening located in the rear stack and operated to remove volatilized agent from the igloo prior to entering to conduct remedial operations. The opened bypass damper allows makeup air to be delivered to the filter exhaust unit at a higher airflow rate than would otherwise be possible. The bypass will only be activated in the event of an internal chemical release or entry operation necessitating the use of the mobile 1,000 cfm carbon filter system and the filtration system will always be in use otherwise with the bypass closed.

Igloo Rear Filter Unit

The rear filter unit is mounted on the rear stack of the igloo as shown in **Figure 8-7**, with a rubber gasket placed between the unit and the stack. The unit contains two carbon adsorbers and one high efficiency particulate air (HEPA) filter. For the same reason provided previously for the front door filter, based on calculations, the adsorbers have a combined capacity to capture 2 liters of mustard agent.

The HEPA filter protects the adsorbers from debris that may enter the igloo and travel upward to the rear filter unit. As the rear carbon adsorbers are larger and more costly to replace than those contained in the front filter unit, a HEPA filter was integrated into the rear filter unit to provide an added level of protection to the adsorbers.

The rear filters are fully accessible and will be tested by connecting to threaded couplings located on the exterior surface of the filter housing in accordance **Attachment 2** of this Permit.

8-5a Containers with Free Liquids [6 CCR 1007-3 § 264.175(a) and (b)]

Liquid wastes will be stored in CSUs H1102 and H1103. Containers storing free liquids must be placed within secondary containment per 6 CCR 1007-3 § 264.175. Although both solid and liquid wastes will be stored in the CSU, the CSU will be managed as if all waste containers stored within contain liquid wastes. All waste containers inside CSUs H1102 and H1103 will be placed on secondary containment pallets. In lieu of a secondary containment system in each storage unit, all waste containers, including those holding solid wastes, will be placed on secondary containment pallets. Waste weights and volumes will be within the spill pallet manufacturer's ratings. A description of the secondary containment pallets is provided in Section 8-5a(3)(a).

8-5a(1) Description of Containers [6 CCR 1007-3 § 264.171 and 264.172]

<u>CSU H1102</u>

Wastes stored in CSU H1102 will be stored in the same containers as received from the PCD RCRA-permitted storage igloos. These approved containers consist of various sized SRCs, propellant charge cans, M2A1 ammunition cans, DOT 3A bottles, and 30- and 55-gallon sized drums. The overpacks and other containers are compatible with the waste contained within. For overpacked munitions, the overpack

is the primary container. **Table 8-2** identifies the types of overpacks and containers used for a munition type or item stored. Some items may be double overpacked. Wastes stored in H1102 will have an accumulation inventory maintained on a daily basis as part of the site Operating Record.

Approved munition overpacks and other containers that will be stored in CSU H1102 from the PCD RCRA-permitted storage igloos are further described in **Attachment 7** of this Permit.

CSU H1103

CSU H1103 consists of drum and tote storage as shown in **Figure 8-5** and will store hazardous wastes that headspace test at less than 1 VSL for agent generated from the EDS treatment process and site support activities. Wastes generated from EDS treatment operations and site support activities will include but are not limited to:

- Neutralent and rinsates
- Used decontamination solution and containment pan liquids
- Decontaminated metal parts and fragments
- Potentially agent-contaminated dunnage/packing material
- Spent carbon from the Environmental Enclosure AFS and the CSU H1102 ICS
- Spent prefilters and HEPA filters from the Environmental Enclosure AFS
- Used PPE
- Miscellaneous solid and liquid wastes as a result of support, maintenance, and cleanup activities
- Laboratory solid waste
- Laboratory liquid waste
- Grayloc seal and O-rings
- Empty containers (to be segregated within H1103 in a designated area to maintain aisle space)

- Boiler blowdown solids.

These wastes will be collected and stored in UN-rated containers compatible with the wastes contained within. Container selection and compatibility are based on the wastes to be stored using references such as DOT requirements (49 CFR 172.101), container compatibility charts provided by container manufacturers, and information presented in 6 CCR 1007-3 § 264 Appendix V regarding incompatible materials. The wastes in H1103 will be segregated between liquids and solids, totes and containers, according to waste type as found in the listing in this section and **Table 8-3**. **Figure 8-5** illustrates the configuration inside the CSU. Generation and accumulation inventories will be maintained on a daily basis as part of the site Operating Record.

For liquid wastes, containers used will be closed-top and can range in size from 1 gallon to 330 gallons. Neutralent and rinsewater wastes will be placed in 330-gallon sized Intermediate Bulk Containers (IBCs), commonly called totes. Solid wastes will be kept in containers with closed lids such as drums (up to 95 gallons in size) as well as 1 cubic yard boxes (commonly used for spent filters and spent carbon and equivalent to four 55-gallon drums). All wastes in CSU H1103 will be labeled. Accumulated weights and volumes will be tracked by the Permittees and secondary containment spill pallet weight and containment volume maximums will not be exceeded. CSU H1103 will be arranged internally for totes and containers, including aisle spacing for inspection and access purposes. One cubic yard boxes will be accounted for on the generation and accumulation inventories and maintained on a daily basis as part of the site Operating Record.

H 1103 Roll-off Container Storage Area

Two lined 25-cubic yard roll-off containers with lockable covers impermeable to precipitation will be placed outside on a separate concrete pad and adjacent to CSU H1103 and designated as the hazardous waste Roll-off Container Storage Area (see **Figure 8-4**). The roll-off containers will be used to store the following hazardous solid wastes tested at less than 1 VSL: decontaminated M2A1 cans; decontaminated metal parts and fragments; decontaminated empty overpacks and containers; non-contaminated dunnage/packing/pallets; spent prefilters and HEPA filters; non-contaminated PPE; Grayloc seals and O-rings; and empty metal containers. Porous wastes that are contaminated with agent or that ever came in contact with liquid agent are not to be placed in the Roll-off Container Storage Area and must be placed in H1103 following treatment. The two roll-off units with lockable tops will be closed and locked except when waste is being placed within and marked Hazardous Waste.

8-5a(2) Container Management Practices [6 CCR 1007-3 § 264.173]

The permitted CSUs will be easily accessible and unobstructed, and waste handling equipment such as drum dolly, pallet jack, or forklift as well as any emergency equipment will be able to be moved freely at each CSU. Signs will be posted designating each CSU and the Roll-off Container Storage Area as permitted hazardous waste storage areas.

Practices will be in place for each CSU to ensure that the containers will always be kept closed during storage, and will not be opened, handled, or stored in a manner that may cause the containers to rupture or leak. Containers inside a CSU will be placed on secondary containment pans and not stacked.

CSU H1102

CSU H1102 will receive wastes from the PCD permitted storage igloos on a periodic basis and may store up to 300 munitions/items or DOT bottles to ensure uninterrupted EDS treatment. Any combination of munition, DOT bottle, or miscellaneous item contaminated with chemical agent may be present at any time at the CSU, but will not be greater than 300 munitions/items or DOT bottles equivalent to 330 gallons. **Figure 8-3** shows an example interior storage arrangement. An up-to-date inventory with a corresponding diagram, with date, waste types, amounts and volume in gallons, and locations within H1102 will be maintained on a daily basis either in CSU H1102 or in the EDS control building. A current running inventory maintained on a daily basis will be onsite as part of the Operating Record.

Up to nine munitions or DOT cylinders may be stored on a containment pan inside CSU H1102 provided waste weights and volumes are within the manufacturer's specifications for secondary containment spill pallets. The secondary containment spill pallets will be inspected and maintained; cracked, split, or collapsed integral grating support will be reasons for replacement. Spills into the secondary containment spill pallets will be promptly cleaned up upon discovery. The containment spill pans will be single stacked within the CSU and adequate aisle space (3 feet between igloo walls and palletized wastes and 10-foot wide main aisle) will be provided to allow for inspection and movement of emergency equipment and personnel per **Figure 8-3**.

At a minimum, waste containers or pallets or area signs will be labeled with the following, as received from the PCD permitted storage igloos.

- The words “Hazardous Waste”
- All applicable and appropriate waste codes
- Nomenclature
- Accumulation start date.

CSU H1102 will be inspected on a weekly basis; a waste inventory will be maintained per SOP and the wastes will be tracked from receipt to treatment/destruction in an EDS unit.

An approximate 10-foot wide minimum main aisle space will be maintained inside the igloo to facilitate material handling equipment, inspections, and space for personnel to move around stacks. This main aisle will allow unrestricted movement of fire protection and decontamination equipment in case of emergencies. A 3-foot aisle space will be maintained between the igloo walls and palletized waste.

CSU H1103

The interior of CSU H1103 will be permitted to store liquid and solid waste in various sized RCRA-approved and UN-rated containers equivalent to a total volume of 13,640 gallons based on storing 30, 330-gallon sized totes and 17 pallets of 55-gallon drums, 4 drums per pallet per manufacturer’s weight and volume limitations. As shown in **Figure 8-5**, three rows of wastes will be present in the unit configured for waste inspection. The secondary containment spill pallets will be inspected and maintained: cracked, split, or collapsed integral grating support will be reasons for replacement.

A 3-foot aisle space will be maintained on each side of the storage igloo from the walls and waste pallets and a 3-foot space will be maintained between each row of waste. All containers, including the 330-gallon sized totes will be placed atop secondary containment pallets. The containment pallets for the totes will hold 350 gallons; for other wastes, containment pallets commonly used for 55-gallon drums will be used and will provide a containment volume of 66 gallons per pallet.

The hazardous waste Roll-off Container Storage Area is an exterior concrete pad adjacent to CSU H1103 and will be permitted to store two 25-cubic yard metal roll-off containers that will be used to store solid hazardous wastes for a combined total of 50 cubic yards. Each metal roll-off container will be lined with

an 18 mil polyethylene liner and will have a cover/lid that will be locked. Care will be taken to maintain the liners and rips, tears, and holes will be repaired promptly.

Waste containers, including the roll-off containers, will be labeled with the following:

- The words "Hazardous Waste"
- Waste codes
- Nomenclature
- Accumulation start date.

For the roll-off containers, an inventory will be kept noting the waste contents added and contained within each roll-off for the Operating Record.

The CSU (including roll-off area) will be inspected on a weekly basis; a waste inventory will be maintained on a daily basis per SOP and the wastes will be tracked from receipt at CSU H1103 through disposal at an offsite treatment, storage, and disposal facility.

8-5a(3) Secondary Containment System Design and Operation [6 CCR 1007-3 § 264.175(a) and (b)]

8-5a(3)(a) Requirements for Base or Liner to Contain Liquids [6 CCR 1007-3 § 264.175(b)(1) and (2)]

Secondary containment will be provided by commercially available secondary containment pans with grating (see **Figure 8-8**). Containers will be placed atop the pan grating. In CSU H1102, each pan has a capacity of 43 gallons. In CSU H1103, the 330-gallon sized totes will be placed atop containment pans with a capacity of 350 gallons; containment pallets for 55-gallon drums at four drums per pallet will provide a containment volume of 66 gallons. CSU H1103 will have secondary containment pallets with the same volume specifications.

8-5a(3)(b) Containment System Drainage [6 CCR 1007-3 § 100.41; § 264.175(b)(2) and 264.175(c)(1)]

The containers will be stored atop grated secondary containment pans, thus will not come into direct contact with any liquids that might accumulate. As part of the weekly inspection, all secondary containment pallets will be inspected for waste accumulation and condition of the secondary containment pallet.

8-5a(3)(c) Containment System Capacity [6 CCR 1007-3 § 264.175(b)(3)]

The containment pallets that will be used to store liquid waste containers will have sufficient capacity to contain 10 percent of the total volume of containers or the volume (100 percent) of the largest container, whichever is greater. In CSU H1102, the largest munition, a 155mm projectile, contains 11.7 pounds of mustard agent. At most there will be nine overpacked munitions on each pallet:

9 × 11.7 pounds = 105.3 pounds

The density of mustard agent HD is 1.2685 grams per milliliter (g/mL). The total gallons of mustard agent HD per containment pan is expressed by:

Gallons of mustard = (105.3 pounds × 453.592 grams per pound [g/lb])/(1.2685 g/mL × 3,785.412 milliliters per gallon [mL/gal]) = 9.95 gallons

10% of Total Volume = 1 gallon.

The DOT cylinder may contain up to 26 pounds of mustard agent. At most there will be nine DOT bottles on each pallet:

9 × 26 pounds = 234 pounds

The density of mustard agent HD is 1.2685 g/mL. The total gallons of mustard agent HD per containment pan is expressed by:

Gallons of mustard = (234 pounds × 453.592 g/lb)/(1.2685 g/mL × 3,785.412 mL/gal) = 22.1 gallons

10% of Total Volume = 2.2 gallons.

As each containment pallet has a capacity of 43 gallons, the secondary containment requirements are met. Additionally, the load-bearing capacity of the 43-gallon containment pallets is 6,000 pounds (see **Figure 8-9**).

In CSU H1103, all containers will be placed atop secondary containment pallets. The containment pallets for the 330-gallon sized totes will hold 350 gallons; for other wastes, containment pallets commonly used for 55-gallon drums will be used that will provide a containment volume of 66 gallons per pallet. As indicated, the secondary containment requirements for containing 10 percent of a combined total or 100 percent of the largest container (whichever is greater) will be met for any pallet that holds liquid wastes.

8-5a(3)(d) Control of Run-On [6 CCR 1007-3 § 264.175(b)(4)]

To prevent run-on from entering a CSU, the existing exterior has been graded for drainage to flow away from the CSUs, and at CSU H1103, also to flow away from the Roll-off Container Storage Area. The Roll-off Container Storage Area will also be elevated to preclude the need for a retention berm.

8-5a(3)(e) Removal of Liquids from Containment System [6 CCR 1007-3 § 264.175(b)(5)]

Any liquid material collected in a containment pallet will be removed from the pallet within 24 hours of detection. Routine weekly inspection of the secondary containment pallets in the storage unit will aid in detecting and implementing the timely removal of any collected material. Collected liquids will be removed using absorbent pillows, socks or pads, or by a portable pump; collected contents will be placed in appropriate waste containers, characterized, labeled, and then stored in the waste storage area CSU H1103 pending further management.

8-5b Containers Without Free Liquids [6 CCR 1007-3 § 264.175(c)]

With the exception of the Roll-off Container Storage Area, the CSUs will be operated as liquid waste storage units as all waste containers (including those with solid wastes) will be placed atop secondary containment pallets. Liquids from any condensation and/or spills will be observed and removed within 24 hours of detection.

8-5c Special Requirements for Ignitable or Reactive Waste [6 CCR 1007-3 § 264.176]

CSU H1102 will contain reactive (energetic) wastes and will be located more than 15 meters (50 feet) from the PCD property line.

8-5d Incompatible Waste Storage [6 CCR 1007-3 § 264.177(a) through (c)]

Stored containers are compatible with the waste materials contained within; and all wastes stored are compatible with each other. At CSU H1103, if incompatible wastes are stored, they will be separated by compatibility per the U.S. Environmental Protection Agency (USEPA) chemical compatibility chart through the use of pallets, distance, portable berms, and/or other physical barriers.

8-5e Air Emission Control Equipment [6 CCR 1007-3 § 264.179]

Applicability of the Subpart CC RCRA requirements for air emission control for containers and the control measures that will be employed at the CSUs is described in Part III of this Permit and **Appendix 8-3** of this Attachment, PCAPP EDS Site Subpart BB and CC Compliance Strategy.

8-6 MISCELLANEOUS UNITS [6 CCR 1007-3 § 264.600 through 264.603]

This section presents information on the EDS units that will be operated at the PCAPP EDS site.

Section 8-6a is a description of the miscellaneous units. **Section 8-6b** describes inspection and closure of the units, as well as waste characterization and treatment. **Section 8-6c** provides information on how the miscellaneous units will be monitored, as well as responses to leaks and corrective actions. **Section 8-6d** describes how the miscellaneous units will comply with

RCRA organic air emissions regulations. **Section 8-6e** addresses the environmental performance standards for miscellaneous units. Information on utilities and facility support equipment for the PCAPP EDS site is presented in **Appendix 8-1** of this Attachment.

8-6a Description of Miscellaneous Unit

The two miscellaneous units addressed in this permit modification are the EDS units. These units do not fit the definition of container, tank, surface impoundment, waste pile, land treatment unit, landfill, incinerator, boiler, industrial furnace, or underground injection well. Therefore, these units are defined as miscellaneous units under 6 CCR 1007-3 § 260.10.

The EDS is a transportable system designed to safely access and treat the chemical fill inside an energetic munition, while at the same time destroying the energetic components of the munition. Two configurations of the EDS Phase 2 Unit will be used at PCD, the EDS P2R and EDS P2A. The Containment Vessels for both units perform the same function and are designed, built, and tested to the same criteria. However, there are differences in components and support equipment. The following sections describe EDS components and equipment; where there are differences between the P2R and P2A units, the information is noted by EDS configuration and subheading.

8-6a(1) Physical Characteristics

This section provides design information for the miscellaneous units as well as the area in which they will be located. This information includes material of construction data, unit dimensions, unit design, and construction. **Figures 8-10** and **8-11** present the layout of the major components of the EDS P2R and the P2A.

8-6a(1)(a) EDS

Two EDS Phase 2 units will be operated at the PCAPP EDS site, the EDS P2R and the EDS P2A. Drawings of the EDS P2R and associated equipment are included as **Appendix 8-5** of this Attachment. Each EDS unit will be capable of safely withstanding a detonation of up to 9 pounds of TNT equivalent explosives. Munitions and other items in overpacks and containers will be unpacked before they are placed into the EDS for treatment.

Each EDS unit is comprised of the following components:

- Trailer/Skid Subsystem
- Lift Assist Subsystem
- Containment Vessel Subsystem
- Clamp Hanger Subsystem (P2R only)
- Clamp Closure Subsystem (P2A only)
- Hydraulic Nut Subsystem (P2R only)
- Rotary Agitation Subsystem
- Reagent Supply Subsystem
- Boiler/Chiller Container Subsystem
- Waste Transfer Subsystem
- Electrical Subsystem
- Explosive Opening Subsystem
- Gas Supply and Leak Detection Subsystem.

Table 8-4 provides a physical characteristics summary of the EDS P2R and EDS P2A components.

The following sections describe each component and function.

8-6a(1)(a)(i) Trailer/Skid Subsystem

EDS P2R

The EDS P2R trailer provides the transportation and work area platform for the EDS unit and has on-board secondary containment for the Reagent Supply Subsystem and the Containment Vessel.

The EDS P2R trailer is a dual-axle, single-drop trailer, with four hydraulic leveling jacks, one between each of the dual wheels, which provide the capability to stabilize and level the trailer during setup. A custom, one-piece tarp and two-piece tarp will cover the top and sides of the trailer when the EDS is transported or stored. The trailer is road legal on all U.S. roads and highways. A prime mover (tow vehicle) equipped with a fifth wheel and standard light and air connections is needed to tow the trailer. The tow vehicle does not require any nonstandard alterations.

The Containment Vessel is mounted in front of the axles of the trailer with the Containment Vessel door facing toward the front of the trailer. The area between the trailer gooseneck and the Containment Vessel serves as operations and munitions loading areas. The electrical distribution panels, power conditioners, power panels, utility panel, and process panel are mounted at the front of the trailer on the gooseneck. The process controls and instrumentation displays are readily available from the operations and munitions loading area. The controls and displays for the supply tank heaters, tank level indicators, and hydraulic nut pump controls are located in the front and to the sides of the operations and munitions loading area. The reagent supply platform is located on the curbside of the trailer. This platform houses the reagent supply panel, water and reagent supply tanks, valves, pumps, and piping. The hydraulic nut pump is controlled from the vessel control panel located on the roadside of the trailer. The processing valves are located on both the reagent supply platform and the Containment Vessel door. Air supply and hydraulic lines run on the underside of the trailer deck.

The working surface of the trailer is about 11 inches below the Containment Vessel mounting surface and is made of stainless steel for compatibility with chemical agents or treatment reagents. The trailer has an open stainless steel grid over a stainless steel secondary containment pan. The area around the secondary containment, gooseneck, and vessel is covered with 1/4-inch stainless steel diamond plate. The secondary containment pan floor is sloped from the gooseneck toward the Containment Vessel and is equipped with spray nozzles to wash down the pan. The rails and the structure below the stainless steel working surface are made of carbon steel.

The trailer is accessed from two fold-down stairs and has additional foldout platforms on each side for access around the vessel and the clamp hanger superstructure. A safety rail surrounds the trailer, including the area where the electrical panels are mounted onto the gooseneck.

EDS P2A

The EDS P2A skid is the base of a flat-rack commercial shipping container with I-beams along the sides and regularly spaced C-channels running between them. Stainless steel diamond plate decking and a secondary containment sump with grating are installed at the working end of the skid. Steel mounting pads for the vessel and motor stands have been installed and are surrounded with carbon steel plate painted with chemical agent-resistant epoxy paint filled with a non-slip material on the skid under and behind the vessel. The skid is 12 inches tall. In use, the skid sits on support feet that attach at the corners. With the feet in place, the deck is 16 inches above the ground. There are forklift pockets on the sides and standard cam lock features at the corners to secure it to a chassis or trailer.

The vessel faces toward the front of the skid. The major electrical panels are mounted on the rear end of the skid and are accessed from off the skid.

The assembled skid weighs approximately 29,000 pounds. The center of gravity is about 3.5 feet above the ground, 8 feet from the front of the skid (just aft of the front fork pocket), and roughly centered along the long axis of the skid. The highest feature on the system, which is the drive motor, reaches 94 inches above the deck.

A platform with rails and steps was fabricated to provide easy access and additional working area around the vessel at the front and along one side. There is also a separate, raised platform by the other side of the skid that provides convenient operator access to the clamp closure screw and holds the tool balancer for the large pneumatic clamp closure torque wrench. The fluid skid sits next to the skid in much the same location as the Reagent Supply Subsystem on the P2R.

8-6a(1)(a)(ii) Lift Assist Subsystem

To aid lifting and positioning heavy objects either onto or off the trailer deck, the EDS trailer/skid is equipped with a Lift Assist that is mounted to the overhead clamp hanger support frame. The Lift Assist is an articulated arm crane (jib crane) with a computer-controlled electric winch that allows vertical lift and positioning from ground level to the EDS Containment Vessel loading area. The Lift Assist comprises two main components: the winch and the articulated arm jib crane. The winch is a commercially manufactured item. The articulated arm jib crane is a commercially tailored product. The electric winch is removed during transportation. Physical characteristics are presented in **Table 8-4**.

8-6a(1)(a)(iii) Containment Vessel Subsystem

The EDS Containment Vessel is where the munitions and other items being destroyed are accessed and the chemical fill is treated. The Containment Vessel is designed to contain the explosive blast and fragments created when the explosive is detonated as well as prevent the release of chemical agent liquid and vapors. The vessel serves as the reactor vessel for treating the chemical fill and explosive component residue, providing mixing and heating (when needed) to facilitate treatment. The cylindrical Containment Vessel is made of forged type 316 stainless steel. A hinged door allows easy access for inserting items to be treated and removing debris. The door of the P2R is secured with two large clamp-halves attached to four threaded rods with hydraulic nuts; the door of the P2A is secured using a three-piece clamp and drive screw (see description of the Clamp Closure Subsystem). The Containment Vessel relies on its all-metal seal to contain each detonation and chemical fill. An EPDM O-ring, along with the all-metal seal, provides an annular airspace to measure the stability of the annular space vacuum and to check the vessel door seal. Following detonation, treatment reagents are pumped into the Containment Vessel.

Secondary containment for the Containment Vessel is provided by the EDS Trailer/Skid Containment Pan. Dimensions of the P2R and P2A pans are provided in **Table 8-4**. Containment volume for each EDS Trailer/Skid Containment Pan is more than 100 percent of the respective Containment Vessel volume. The secondary containment calculation for both the EDS Trailer and Skid Containment Pan is provided in **Appendix 8-2** of this Attachment.

The Containment Vessel was designed and fabricated to American Society of Mechanical Engineers (ASME) Boiler and Pressure Vessel Code, Section VIII, Division 3 code case 2564 for impulsively loaded vessels. The static working pressure is 2,800 psig at 125°F with an impulsive load of 9 pounds TNT equivalent explosives.

Temperature monitoring from the thermocouple provides feedback to the temperature controller located on the Containment Vessel control panel. The desired temperature can be set within a range of ±9°F on the Containment Vessel control panel. The nominal operating temperature range of the Containment Vessel is 0°C to 110°C (32°F to 230°F).

The Containment Vessel Subsystem consists of the following components:

- Containment Vessel
- Door assembly with door valves and fittings
- Door hinge and support jack.

Door Assembly

The door assembly provides access to the interior of the Containment Vessel, ports for draining the vessel; reagent, water and steam injection as well as for liquid and vapor sample collections; and electrical feedthrough connections for initiating the explosive donor charges. **Figures 8-12** and **8-13** show the EDS P2R and P2A vessel doors, respectively. Both door assemblies have the following features.

- Metal-to-metal seals for the door and feedthrough flange ensure total containment of solid, liquid, and vapor byproducts.

- An EPDM seal (O-ring) is also on the vessel door and feedthrough flange to allow for leak checks of the metal seal.

- The door has stainless steel blast (protector) covers mounted on the interior side to protect connections during detonation operations.

- Manual high pressure valves control flow through the fill and drain ports on the door assembly.

- A thermocouple monitors the internal temperatures during processing operations.

- The medium pressure, high-temperature, packed-stem valves protect the system components from the pressure spike during detonation.

- Manual medium pressure valves control flow of liquids and vapors to and from the Containment Vessel.

- No method of pressure relief (for example, rupture disk or pressure relief valve) is provided due to the risk of venting toxic vapors.

- Manual medium pressure valve assemblies are used to collect liquid and vapor samples.

- Port fittings and primary containment valves use Autoclave Engineers medium pressure hardware for injecting steam.

- Self-closing quick disconnect fittings are provided for liquid and vapor flow.

- High voltage electrical feedthroughs connect the Firing System to the detonators inside the Containment Vessel.

Door Hinge and Support Jack

The door hinge assembly consists of a pin, bushings, features to open and close the door, adjustments for alignment with the Containment Vessel, and a mechanical stop that prevents the door from unintentionally closing when open.

The machine screw jack incorporates an alloy steel worm, which drives a high-tensile bronze worm gear. The worm shaft is supported by antifriction bearings with seals that prevent loss of lubrication. The housing is made of ductile iron that is rated to support the unit load. Fabric-type boot protectors are provided to cover the exposed portion of the lifting screw. The jack provides support for the Containment Vessel door and hinge when the door is open.

Physical characteristics of the Containment Vessel Subsystem are shown in **Table 8-4**.

8-6a(1)(a)(iv) Clamp Hanger Subsystem (P2R Only)

The EDS P2R contains a two-piece Clamp Hanger Subsystem used for opening and closing the Containment Vessel door clamps and supporting their weight while the Containment Vessel door is open. This subsystem consists of two clamp hanger assemblies (one for each clamp half) with proximity sensors, two drive-pin assemblies that each attach to a clamp hanger assembly and a lead screw with an

electric drive motor, weight-supporting superstructure, control panel, and pendant control used in lieu of the control panel when precise movement is necessary.

The EDS P2R will have two Grayloc clamp halves attached to four threaded steel rods with hydraulic nuts clamped around the Containment Vessel door. The Containment Vessel relies on a Grayloc all-metal seal to contain the detonation and the chemical agent. As the nuts are tensioned, the steel rods apply pressure to the flange, pressing the door into the metal ring and forming a metal-to-metal seal between the door, the metal ring, and the Containment Vessel. The clamps are initially drawn together using a pneumatically-driven nut runner unit to ensure gas-tight Containment Vessel operation.

8-6a(1)(a)(v) Hydraulic Nut Subsystem (P2R Only)

The Hydraulic Nut Subsystem provides the required pre-load on the P2R Containment Vessel clamp to ensure a gas-tight vessel operation. The hydraulic nut pump applies hydraulic pressure to the hydraulic nuts to load or stretch the threaded rods axially. Once the required tension is achieved, locking rings are tightened against the hydraulic nuts to retain the load, the hydraulic pressure is released, and the hydraulic line is then disconnected.

8-6a(1)(a)(vi) Clamp Closure Subsystem (P2A Only)

The main function of the Clamp Closure Subsystem is to provide sufficient pressure to adequately seal the P2A Containment Vessel and door.

The Clamp Closure Subsystem consists of the following components:

- Three-piece Grayloc clamp assembly
- Pneumatic wrench-driven clamp drive screw
- Pressure gauges
- Hoses and connections.

The EDS P2A will have a three-piece Grayloc clamp assembly mounted on a support plate that holds the clamp assembly in its proper position with relation to the Containment Vessel and the Containment Vessel door hubs. All that is needed to tighten the three-piece clamp assembly is to turn the one drive

screw to its proper torque. The single closure drive screw is supported by a fixed block that maintains the centerline of the clamp while it is opening and closing.

A high speed pneumatic torque wrench will be used to turn the drive screw most of the way while a larger, lower speed wrench is used to generate the torque required for final closure. The larger wrench weighs approximately 70 pounds, hangs from a lift-assist fixture attached to a pole on the raised platform, and is swung from the stowed position to the drive screw. The smaller wrench weighs less than 10 pounds. Therefore, no structural assist feature is needed, although a storage feature is provided on the raised platform to store the wrench when not in use. The torque that each wrench generates is a function of the air pressure provided to the wrench. The air pressure to each wrench is controlled by separate regulators on the fluid skid.

8-6a(1)(a)(vii) Rotary Agitation Subsystem

The Rotary Agitation Subsystem rotates the Containment Vessel 360 degrees at 1 rpm for 15 rotations (15 minutes equivalent) and then reverses the direction for the same amount of time and revolutions, unless halted or until the desired total rotation time is achieved. The absolute encoder tracks Containment Vessel movement so that if halted in mid-cycle, the rotation is restarted in the direction and for the number of rotations required to complete the cycle.

The Rotary Agitation Subsystem includes the following components:

- Drive motor and mount assembly
- Vessel support assembly
- Hub/shaft assembly
- Absolute encoder
- Incremental encoder
- Fan motor.

Drive Motor and Mount Assembly

An electric motor and gearbox are mounted on the motor support structure. The gearbox output shaft provides a mechanical coupling with hub/shaft assembly. The Drive Motor and Mount Assembly includes the motor support structure, motor and gearbox to vessel hub coupler, and bearing assembly.

Vessel Support Assembly

The support structure near the front of the Containment Vessel holds the two casters that support the Containment Vessel as it rotates. The support structure at the rear of the Containment Vessel is a two-piece safety ring and mount assembly used during transport or if performing maintenance that requires the rotation shaft assembly to be disconnected from the Containment Vessel.

Hub/Shaft Assembly

The Hub/Shaft Assembly is located between the Containment Vessel and the drive motor gearbox output shaft. The drive motor turns the Containment Vessel through the Hub/Shaft Assembly. A slip ring, a coupler, and a bearing are installed on the hub/shaft. The coupler attaches the hub/shaft to the gearbox of the motor and takes up any misalignment between the two assemblies. The bearing holds the rotating shaft and attaches to the mount assembly.

Absolute Encoder

The Absolute Encoder is mounted on the aft (rear) shaft of the drive motor gearbox. The data from the encoder is used by the drive system to stop the Containment Vessel at the “home,” “fill,” and “drain” positions, in addition to rotating the Containment Vessel. Additionally, the encoder tracks the Containment Vessel position, ensuring an equal number of revolutions in the clockwise and counterclockwise directions.

Incremental Encoder

The Incremental Encoder located inside the electric drive motor controls the number of Containment Vessel revolutions.

Fan Motor

A fan motor is mounted on the top of the electric motor to prevent overheating of the drive motor.

8-6a(1)(a)(viii) Reagent Supply Subsystem

The Reagent Supply Subsystem is used to hold, heat, and transfer reagent and water used to treat the chemical fill and water to rinse the Containment Vessel. Physical characteristics of the Reagent Supply Subsystem are shown in **Table 8-4**.

The reagent supply platform is located on the curbside of the trailer. The platform contains hydraulic cylinders, a secondary containment pan, two stainless steel supply tanks, four hydracell pumps, valves, and plumbing for the Reagent Supply Subsystem. The hydraulic cylinders fold the platform onto the trailer deck for shipping and extend the platform for operations. The platform is slightly higher than the working deck of the trailer in the extended position. Adjustable folding legs provide support for the platform. All four hydracell pumps are located on a pump rack, near the back edge of the platform.

The Reagent Supply Subsystem has two stainless steel tanks with appropriate reagent, solvent, or water, pending transfer to the Containment Vessel for chemical neutralization. Tank 1 is intended for water and Tank 2 is intended for reagents.

Tank 2 is equipped with an external heater for freeze protection and to make viscous fluids easier to pump. A pneumatic double diaphragm source pump transfers water and an electric drum pump transfers reagent through lines and manually controlled valves to the supply tanks. Four high-pressure hydracell pumps (two per supply tank) transfer water and reagents through lines and valves to the Containment Vessel. A valve panel allows for the transfer of liquids and gases into the vessel, sample collection, and removal of waste fluids from the Containment Vessel. Valves are located on the platform, the Containment Vessel door valve panel, and the secondary containment pan.

The Reagent Supply Subsystem consists of the following components:

- Reagent supply panel
- Water and reagent supply tanks
- Vacuum pump
- Water and reagent supply pumps
- Water source pump
- Gas panel.

Reagent Supply Panel

This panel provides the operator with access to the mounted valves to control the reagent supply system. Cutout windows allow visual access to the magnetic float level indicators on the supply tanks.

Hose Docking Station

The station is located to the right of the reagent supply panel and holds the QE (effluent drain hose), QS (reagent, helium, and water supply hose), QV (vacuum hose), and LD (vacuum flange on helium leak detector hose) during Containment Vessel rotation. The Hose Docking Station also holds the hydraulic tensioner pump hose during vessel rotation. Proximity switches initiate Containment Vessel rotation only when the hoses are in their docking station. The hoses will be of double-wall construction and hose quick-connect couplings will be replaced promptly if they start leaking.

Water and Reagent Supply Tanks

The rinsewater tank has a cooling jacket and the reagent tank has an external electrical heater to supply the fluids at prescribed process temperatures. The supply tanks have thermocouples for temperature control and side-mounted float level indicators with high- and low-level switches. The low-level switch, when activated, will shut off the external tank heaters and sound an audible alarm.

Pan Pump Panel

A panel located on the rear of the reagent supply platform on the pump rack contains a quick-connect and three hose storage connections. Three storage quick-connects cap the hose lines to the trailer secondary containment pan, reagent supply platform secondary containment pan, and the strainer during non-operational periods. The functional quick-connect leads through a valve to a pneumatic pan pump and then to the pan waste container.

Pan Pump

A pneumatic double diaphragm pump is used for removing wastes from the secondary containment pan.

Vacuum Pump

The vacuum pump evacuates sample lines prior to collecting a liquid or vapor sample. The vacuum pump exhaust is routed through a waste drain manifold and vented through an exhaust manifold at the top of the interim holding container to the Environmental Enclosure AFS.

Water and Reagent Supply Pumps

Four high-pressure hydracell pumps are used to supply water and reagent to the Containment Vessel from the supply tanks. Pneumatic motors drive the pumps with the pneumatic motor input set to 80 psig for normal operations. The pneumatic motor input pressure can be increased to a maximum of 100 psig to overcome higher than normal Containment Vessel pressures.

Reagent Source Drum Pump

An electric drum pump is used for filling the reagent supply tank.

Water Source Pump

The pneumatic double diaphragm pump is used to fill the water supply tank from a water source and can supply pressurized water to a spray nozzle inside Tank 3.

Air Control Panel

A panel located on the side of the reagent supply platform next to the curb side stairs contains two air pressure regulators. The air control panel supplies compressed air for the pneumatic pumps and wrenches, low pressure helium for leak checking, and inert gas for post-process vessel purging. Helium is supplied by a gas bottle restrained to the trailer. Compressed air and nitrogen are supplied from a compressor and inert gas cylinders outside the Environmental Enclosure. The air regulators control the maximum air pressure to the source pumps, the supply pumps, and the nut runners. The helium regulator limits the maximum helium pressure for leak rate testing to approximately 10 pounds per square inch (psi). The two valves provide an auxiliary air connection for pneumatic tools, etc. The four quick-connects provide pneumatic inlet to the reagent supply platform, and helium inlet to the reagent supply platform.

Waste Container Quick-Connect Bracket

The bracket on the aft side of the reagent supply platform provides the hose quick-connects to a waste container. The bracket also contains an effluent sample collection station.

8-6a(1)(a)(ix) Boiler/Chiller Container Subsystem

The Boiler/Chiller Container houses the steam skid and the chiller skid. The steam skid generates steam that is used to significantly reduce the time required to heat the Containment Vessel for both the neutralization step and the subsequent hot water rinse. It consists of a steam generator, a water softener cartridge, an ascorbic acid feed reservoir, an ascorbic acid pump, a blow down tank, a flow meter, an air-driven double-diaphragm pump, and controls mounted on a small skid that acts as a secondary containment pan. It provides saturated steam at approximately 180°C ±10°C (approximately 150 psi) to the Containment Vessel by a 60-kilowatt (kW) steam generator. The system is designed to provide steam to heat the fluid in the Containment Vessel to a specified setpoint and then hold the fluid at that temperature until the steam transfer system is shut off. Control is established by opening and closing a solenoid to regulate the flow of steam. A small bypass around the steam control valve with a check valve ensures there is always a small positive flow to prevent backflow into the steam hoses. There is an additional check valve in the steam line on the vessel door for the same purpose. An interlock prevents the steam solenoid valve from opening if the steam supply pressure is less than the vessel pressure.

The chiller unit skid is used to chill the water in the water supply tank mounted on the reagent supply platform. It consists of a refrigeration unit, and the necessary plumbing and valves mounted on a small skid that acts as a secondary containment pan. The chiller unit circulates coolant to the water supply tank to chill the water to the desired temperature.

8-6a(1)(a)(x) Waste Transfer Subsystem

The Waste Transfer Subsystem equipment is used to:

- Drain liquid and vent vapors from the Containment Vessel.
- Drain/pump out liquid from the trailer secondary containment pan and the reagent supply platform secondary containment pan, Tank 3 Skid secondary containment pan, waste

containment pan, and the reagent secondary containment pan for further transfer to applicable liquid waste containers (330-gallon Totes or IBCs).

- Contain liquid wastes.

The liquid and vapor will be drained and vented from the Containment Vessel to a UN-rated liquid waste container. The container assemblies use weight scales to monitor container weight as a means to account for all effluents and prevent overfilling.

Up to three waste containers will be used. The Containment Vessel waste transfer and secondary containment pan waste transfer diagrams (**Figures 8-14** and **8-15**) depict a typical waste transfer setup using Tank 3 and two liquid waste containers in the drain line from the Containment Vessel. The liquid and vapor generated from chemical treatment and rinsing will be transferred from the Containment Vessel through a hose connected to waste containers 1 and 2 (**Figure 8-14**) or Tank 3. The vapor vents out of the liquid waste containers into a vent line that exhausts to the AFS carbon filter system. Closed-top containers will be used to contain solid waste materials.

The Tank 3 Skid is part of the Waste Transfer Subsystem and consists of Tank 3, two double diaphragm pumps, a valve panel, and the Tank Skid Secondary Containment. Tank 3 is a 125-gallon, stainless steel tank that is used to collect and cool hot rinsewater waste from the EDS vessel prior to being pumped to the waste container. The Tank 3 Skid Secondary Containment is constructed of stainless steel and has a containment capacity of 136 gallons.

The liquid waste containers will be placed within appropriately-sized portable secondary containment pan(s). **Figure 8-16** shows an example of a secondary containment pallet that would be used for liquid waste IBCs, also known as totes.

8-6a(1)(a)(xi) Electrical Subsystem

The Electrical Subsystem provides the required 480-volt (V), 3-phase electrical power for the vessel, reagent supply tank heater, rotary agitation, and drive motor via two distribution panels. Conditioned 120 V power from two distribution panels is supplied to other subsystems. Electrical power can be supplied by utility power (130-ampere minimum) or by a generator (800 kW, 750 V generator). Electrical enclosures in the process area meet the National Electrical Manufacturer's Association

(NEMA) 4X requirements for outdoor and corrosive use; all others are specified as NEMA 4 for outdoor use.

Permittees, at a minimum, shall follow the 800 kW Generator Set (QST30 Series Diesel Engine) Preventative Maintenance, Checks and Services (PMCS) Checklist as provided by the manufacturer and incorporated into this Permit. The Permittees, at a minimum, are required to perform and follow the specified frequencies in the checklist, preventive maintenance items, checks and services, test runs, and ensure the unit will perform as intended during power outages. The checklist and supporting records shall be retained onsite as part of the Operating Record. CDPHE may request maintenance records for review during inspections that demonstrate alignment with and completion of the checklist items.

8-6a(1)(a)(xii) Explosive Opening Subsystem

The Explosive Opening Subsystem consists of the AFSS munition holder, plus the Firing System and donor charges.

The AFSS and munition holder serves to connect, hold, and align explosive charges that open the main body of items being treated to expose chemical fill and to protect the Containment Vessel interior from the high velocity fragments that result during detonation of shaped charges, burster casings, and munitions (or other items). The following text describes the AFSS framework.

AFSS

The AFSS is a reusable framework with expendable steel rods designed to contain expendable munition holders. The AFSS consists of the main unit weldment, 86 short rods, paddle gap cover (EDS P2R only), and two support plates (as required). **Figure 8-17** shows the AFSS and associated components. **Figures 8-18** and **8-19** show 3-pack and 6-pack munition holder assemblies, respectively, empty and loaded. **Table 8-5** summarizes the physical characteristics of the AFSS.

Donor (Explosive) Charges

Donor charges are used to access the munitions' and other items' fill, thereby releasing the chemical fill into the Containment Vessel. The donor charges are also used in destroying the munition burster explosive (if present). Donor charges consist of linear-shaped charges (LSCs). The LSCs are used in the munition holder to access the main body of the munition or item to expose the contents for chemical treatment and to disrupt the explosive train of the munitions. The primary requirement, cutting the walls of the munition(s) or item(s), is accomplished with pre-formed length(s) of copper-sheathed LSC with a cyclonite (RDX)-based explosive filler. The shape, length, and grains per foot of the LSC are specific for the type of munition(s) or item(s) to be treated. When processing multiple munitions, up to six LSCs may be used.

Detonators

Exploding bridge-wire detonators are used to initiate donor charges. The Firing System is used to electrically initiate the donor charges. The detonators used to initiate the LSCs are Reynolds type RP-1®. The detonator is insensitive to unexpected or undesirable energy inputs (static, impact, etc.) and is detonated by the discharge of high current through the bridge-wire. The bridge-wire explodes and produces a shock wave, which, in turn, initiates the explosive in the shaped charges. The Firing System is used to simultaneously initiate the LSCs.

Firing System

The Firing System is a high-voltage capacitor discharge unit capable of firing up to six exploding bridge-wire detonators. The Firing System is connected to the detonators in the Containment Vessel by detonator cables, and is remotely operated through a detachable control module that allows the operator to arm and fire the Firing System from up to 350 feet away from the EDS. The firing system includes various features necessary to safely fire the detonators and to test and monitor the system and detonator cables. One of these features is a safety interlock plug to prevent inadvertent operation of the system.

8-6a(1)(a)(xiii) Gas Supply and Leak Detection Subsystem

The functions of the Gas Supply and Leak Detection Subsystem are as follows:

- Measures the annular space vacuum decay rate and checks the integrity of the Grayloc seal and the EPDM O-ring of the Containment Vessel

- Measures the annular space vacuum decay rate between the Grayloc seal and O-ring mounted on the Containment Vessel door

- Pressurizes the Containment Vessel with helium to measure the helium gas migrating across the vessel door metal seal and the high voltage feedthrough flange metal seal into the annular spaces of the Containment Vessel door and flange

- Flushes vapors from the Containment Vessel and Containment Vessel door piping and fittings using pressurized inert gas as purge.

The Gas Supply and Leak Detection Subsystem consists of the following main components:

- Two compressed gas cylinders (one helium, one nitrogen)
- Pressure regulators and gauges
- Flexible and rigid hoses
- Helium leak detector.

There are two major components to the Gas Supply and Leak Detection Subsystem: the gas supply component and the helium leak detector. The gas supply components will provide an inert gas for pressurizing the Containment Vessel for the leak checks and nitrogen for flushing the Containment Vessel headspace. The inert compressed gas cylinders are approved DOT steel cylinders. The inert and purge gas cylinders are located on the side of the right side set of stairs and secured by the bottle bracket.

The Gas Supply and Leak Detection Subsystem will be used to check the Containment Vessel annular space and seal and the high voltage feedthrough flange seal. The helium leak detector is mounted in the helium leak detector box on the trailer. A vacuum decay rate check will be performed on the vessel door annular space to test integrity of the door seal and Containment Vessel O-ring. The helium leak check is

also performed on the high-voltage feedthrough flange metal seal along with the Containment Vessel door seal on the same schedule.

8-6a(2) Operations and Maintenance

Each EDS unit is a transportable system mounted on a trailer or skid and designed to destroy chemical-filled munitions/items with or without explosive components. Explosive LSCs are used to detonate the munition's burster, if present, and breach the munition or item wall to expose the chemical fill. Once the fill is exposed, chemical reagent (MEA) is added, and the Containment Vessel is rotated and heated with steam. When treatment of the chemical fill is complete, waste materials are removed from the Containment Vessel, placed in waste containers, and temporarily stored pending transport offsite to a permitted treatment, storage, and disposal facility.

All operations and maintenance activities will be in accordance with EDS SOPs, current version, and the EDS Phase 2 Series Operations and Maintenance Manual, current version, respectively. The complete list of procedures will be maintained in the current version of the SOPs, which will be maintained onsite during operations.

8-6a(2)(a) Pre-Operations

PMCS will be performed to keep the EDS units in operating condition. Each EDS unit is prepared for operations and processing by first performing initial setup and pre-operations.

Prior to operating the EDS P2R unit, Supply Tank 1 will be filled with water, Supply Tank 2 will be filled with reagents, and any Tank 3 contents will be drained to a liquid waste container, as needed. Pre-mixed reagent (MEA) will be pumped via a drum pump from drums or bulk containers into Supply Tank 2. The vessel sealing surfaces are cleaned and lubricated. The steam generator and chiller unit are started up.

The munitions or items to be processed will be transferred from the CSU to an EDS Environmental Enclosure just prior to treatment.

8-6a(2)(b) Operations

The EDS units will be operated in accordance with EDS SOPs, current versions. Any number of items may be processed at a time in an EDS unit provided the NEW capacity is not exceeded. Whether processing one or more items, the treatment operation is the same.

The operational scenario for the EDS consists of the following:

- Loading the item(s) to be processed
- Accessing fill and destroying energetic components, if present, by detonation
- Treating chemical fill and explosive components and residue; rinsing metal parts, fragments, and system
- Performing chemical analysis of neutralent and rinsate waste streams
- Transferring waste.

Loading

The items to be processed are placed into an expendable holder that can contain any combination of one or more munitions or items provided the NEW (Net Explosive Weight) for the EDS unit is not exceeded (9 pounds NEW). The AFSS will already be inside the Containment Vessel.

The shaped charges are placed in the expendable holder. Detonators are attached to the shaped charges. Once the expendable holder, including items to be processed and donor charges, has been completely assembled, it will be placed into the AFSS within the Containment Vessel. Final detonator connections will be made to the Containment Vessel door using the interior detonator jack assembly. The Containment Vessel door and the door clamps will be closed. The clamp rods (screw) then will be tightened. Vacuum decay rate and helium leak checks are performed.

Accessing Fill and Energetic Detonation of Munitions

Each EDS unit has two separate firing systems: a primary and a backup (firesets A and B). The appropriate firing system will be used to remotely and simultaneously initiate the shaped charges.

When ready, the firing sequence is initiated and the item(s) detonated.

Treatment of Chemical Fill, Explosive Residue, and Metal Parts and Fragments

The chemical fill will be treated, along with metal parts and fragments, in the Containment Vessel according to the SOP.

For treatment of detonated chemical-filled munitions and other items, the Containment Vessel will be heated using steam to a specified temperature 60°C ±5°C [140°F ±41°F], and rotated at 1 rpm for 15 rotations (15 minute equivalent) then directionally reversed at the same rate and number of rotations, after the appropriate reagent has been added via the spray nozzle. Liquid samples will be collected and analyzed to confirm a treatment level specified in **Table 8-1** has been met. Once a treatment level is confirmed, the liquid wastes (neutralent) from the Containment Vessel will be drained into a waste container for storage at the less than 90-day hazardous waste storage area.

The Containment Vessel will then be rinsed with water heated with steam to a specified temperature 100°C ±5°C [212°F ±41°F] and rotated for 1 hour. The hot rinsate is then drained into Tank 3 and cooled before transfer to a waste container for storage. Any additional rinses will be performed using water. The Containment Vessel will then be purged with nitrogen to the AFS and then a headspace sample is collected to verify that the chemical agent vapor concentration in the Containment Vessel is at acceptable levels (less than 1 VSL) to open the door. The vessel door will then be opened. The solid wastes will be visually inspected for unexploded energetic items, residual solidified agent, and occluded material, removed from the Containment Vessel, placed into a waste container, and sealed. Occluded material is defined as metal deformed in such a manner as to potentially leave a space where reagent cannot contact and treat effectively, encapsulated agent, e.g., possibly a burster. Should any unexploded explosive components, residual solidified agent, and/or occluded material be found, they will be segregated from the other solid wastes, placed in a separate container, and managed by introducing into the following detonation for retreatment.

Before subsequent processing activities commence, the inside of the Containment Vessel will be cleaned and visually inspected. The vessel door Grayloc seal, EPDM O-ring seal, and any damaged or bent rods from an AFSS will be replaced after each operation. The electrical connection feedthroughs will also be inspected and replaced as necessary.

If the EDS undergoes temporary closeout for stand-by mode, the EDS will be decontaminated and monitored to appropriate levels in accordance with the Closure Plan, **Attachment 6** of this Permit.

Waste Transfer

Liquid and gaseous waste effluents from the Containment Vessel will be drained through flexible hoses connected to waste containers 1 and 2. Emissions from waste containers 1 and 2 will be diverted to the AFS carbon filter system.

Wastes generated from EDS operations will include the following:

- Neutralent and rinsewater
- Decontaminated metal parts and fragments
- Used decontamination solution/rinsate
- Secondary containment pan/sump liquids
- Spent prefilters and HEPA filters from the Environmental Enclosure AFS
- Spent carbon from the Environmental Enclosure AFS
- Used PPE

- Miscellaneous solid and liquid wastes as a result of support, maintenance, and cleanup activities
- Grayloc seal and O-rings
- Unexploded or untreated energetics or propellant material (unlikely to occur but could be generated)
- Potentially agent-contaminated empty metal overpacks
- Potentially agent-contaminated dunnage/packing material
- Boiler blowdown liquids and solids
- Dunnage and wooden scrap.

All hazardous waste generated will be placed in appropriate containers and managed in permitted storage at the PCAPP EDS site, pending shipment offsite to a permitted treatment, storage, and disposal facility.

8-6a(3) Mitigative Design and Operating Standards

The EDS units addressed in this permit modification are designed and will be operated in a manner that reduces the risk of environmental contamination. The materials of construction for the EDS equipment are compatible with the chemical agent to be treated, treatment reagent used, and decontamination solutions. Each EDS unit will be on a trailer or skid equipped with secondary containment and located within an Environmental Enclosure consisting of a ceiling, sides, and impermeable flooring (see **Figure 8-20**). Secondary containment will be provided by separate built-in containment pans for the EDS Containment Vessel and reagent tank; separate secondary containment will be provided for the liquid waste containers and hazardous waste tank; and the entire enclosure floor space will be covered by a portable secondary containment system with berm.

Although the floor will be coated with a polyurea material, the coating is an added protection factor to ensure that any spills will not permeate downward to soils underneath and will be maintained.

The ground surrounding the Environmental Enclosures for the EDS units will be graded to direct the flow of liquids away from the structure. These design features will protect the EDS units from precipitation run-on and minimize the potential for contaminated runoff. See **Appendix 8-1** for a description of the enclosures.

Work areas will be monitored for chemical agent vapors according to the Site-Specific Monitoring Plan (see **Attachment 3** of this Permit). Workspace air will be vented to an Environmental Enclosure AFS that will contain a sulfur-impregnated carbon filtration system. Fire safety equipment designed for chemical and electrical fires will be staged in the support areas and other firefighting support will be provided by the PCD Fire Department, as necessary.

8-6a(4) Operating Standards

When operating an EDS unit, operations personnel will follow SOPs designed to reduce the risk of chemical exposure to human health or the environment. These operating procedures will ensure the following:

- Operators are trained in the function and operations of waste handling, the EDS, and associated equipment.
- EDS treatment/destruction operations will be conducted remotely; no personnel will be present inside the Environmental Enclosure during detonations.
- Operations will be observed and recorded through the use of closed-circuit televisions.
- Personnel operating the EDS equipment will wear appropriate PPE.
- Routine inspections of the EDS processing areas and equipment will be conducted.
- Preventive maintenance will be performed at regular intervals and as specified in the EDS P2 Series Operations and Maintenance Manual.

8-6b Monitoring, Analysis, Inspection, Response, and Corrective Action [6 CCR 1007-3 § 264.602]

Monitoring will be conducted at the PCAPP EDS site for worker safety and environmental protection. The monitoring systems will consist of MINICAMS and Depot Area Air Monitoring System (DAAMS) as described in **Attachment 3** of this Permit.

The monitoring devices will be inspected as detailed in **Attachment 3** of this Permit modification.

Operators will keep a log of events that occur during a work shift. These events include activities preceding, during, and following the treatment/destruction of munitions or items, any near real-time (NRT) monitoring alarms, and historical monitoring confirmations. The use of operating checklists and datasheets will enable operators to review historical analysis and records.

8-6c Environmental Performance Standards for Miscellaneous Units [6 CCR 1007-3 § 264.601]

A miscellaneous unit must be located, designed, constructed, operated, maintained, and closed in a manner that ensures protection of human health and the environment. The EDS units have been designed and will be operated and closed in a manner that precludes the release of hazardous waste constituents. Engineering and administrative controls in place during operations will preclude run-on, runoff, and contact with soil, thus preventing surface and groundwater contamination as well as releases to the atmosphere. Operations will occur inside an Environmental Enclosure within a vessel with secondary containment. Each Environmental Enclosure will have an attached AFS that consists of two, operating in parallel, filtration units. Each filtration unit consists of a prefilter, HEPA filter, two banks of sulfur-impregnated carbon filters and another HEPA filter along with fan and ductwork. The filters are monitored for agent in between the carbon filters. The AFS and heating, ventilation, and air conditioning (HVAC) systems (supply air) will be in operation whenever wastes are present and/or EDS operations are occurring. Details on the AFS carbon filter performance are provided in **Appendix 8-4**.

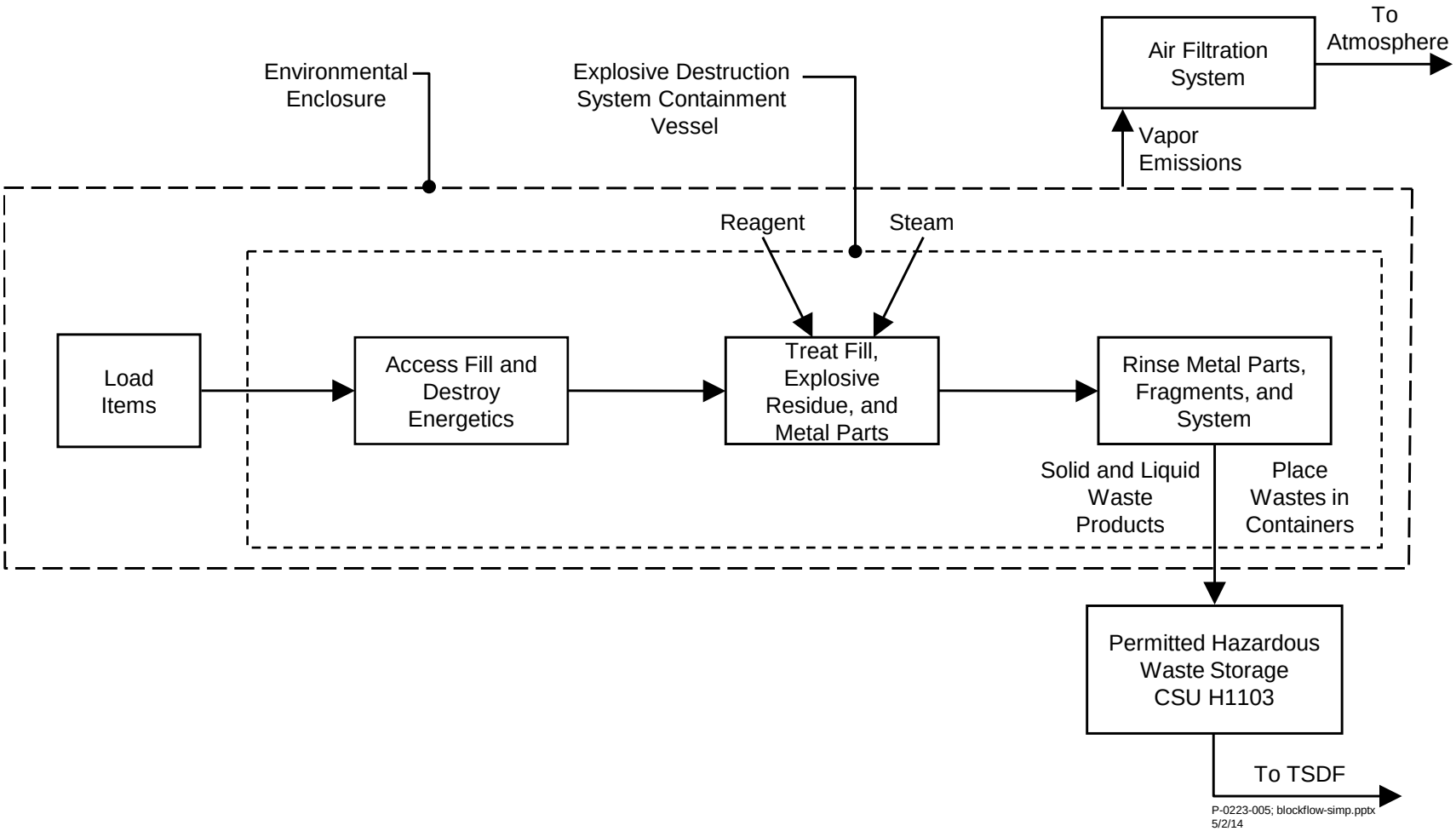

Figure 8-1. Simplified Block Flow Diagram for the EDS

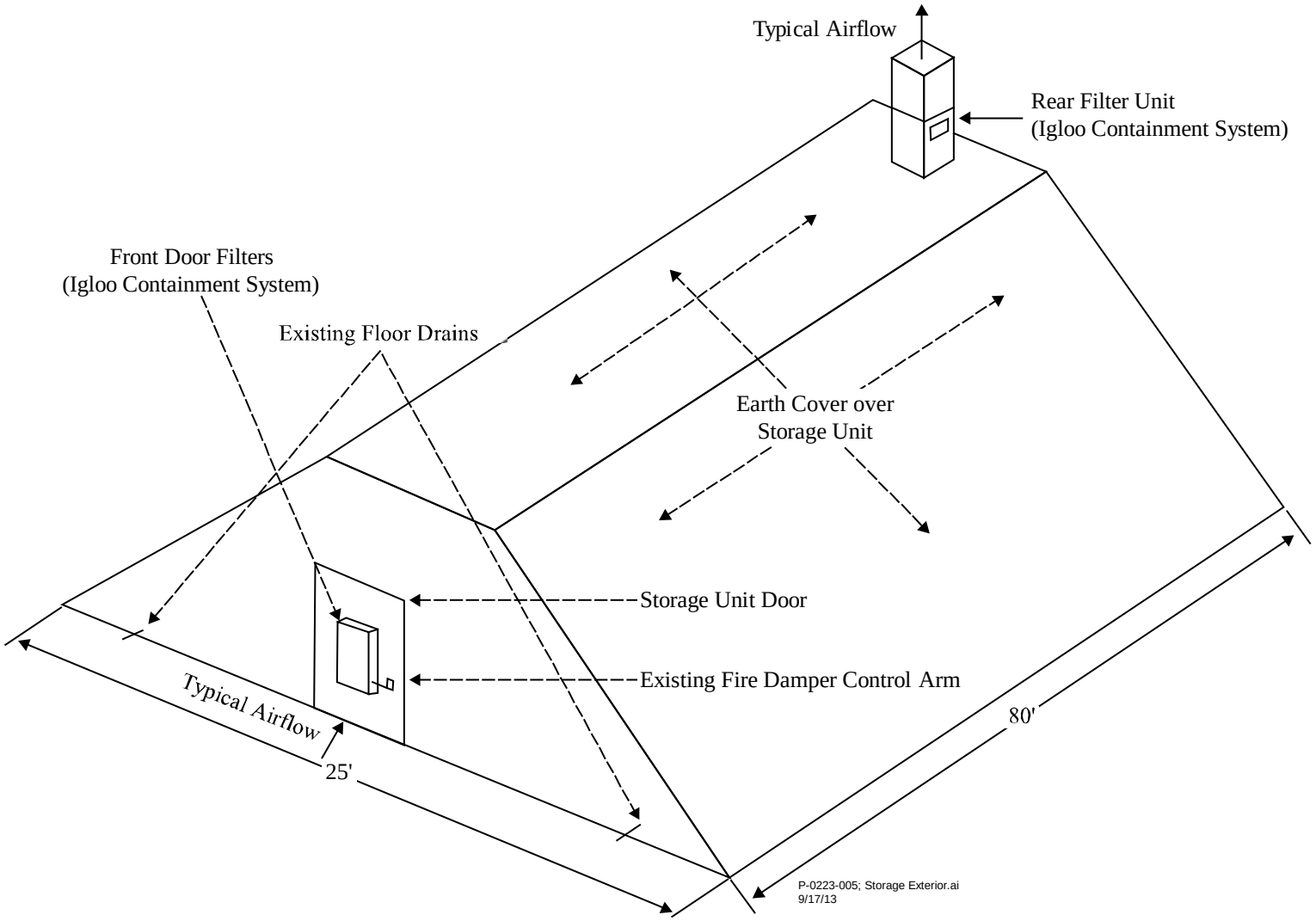

Figure 8-2. CSU Exterior View (not to scale)

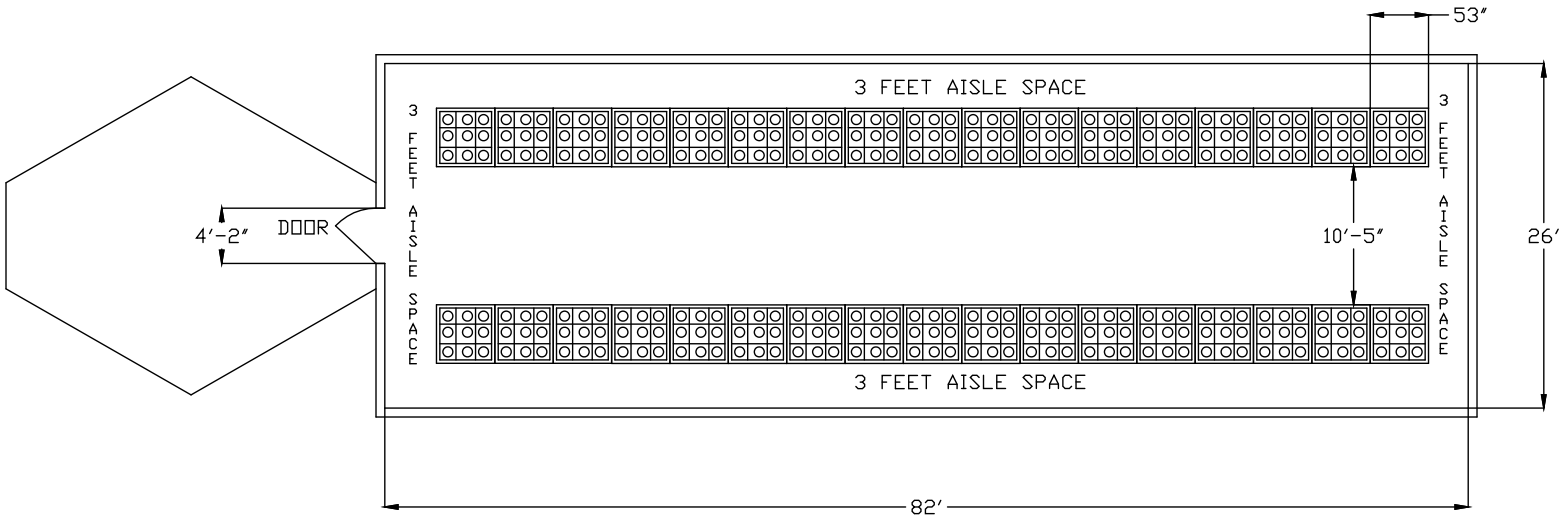

Figure 8-3. CSU H1102 General Storage Arrangement

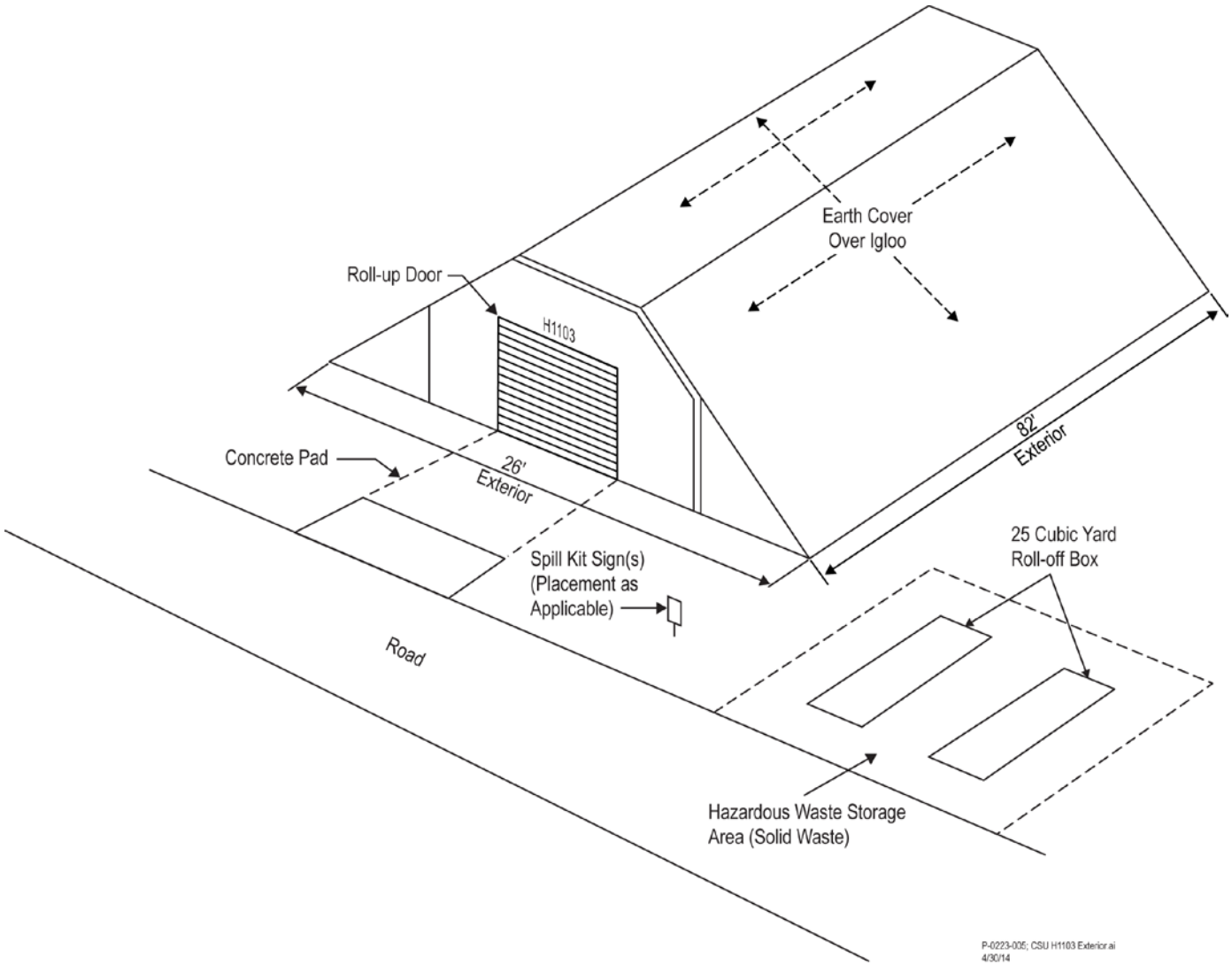

Figure 8-4. CSU H1103 Exterior View

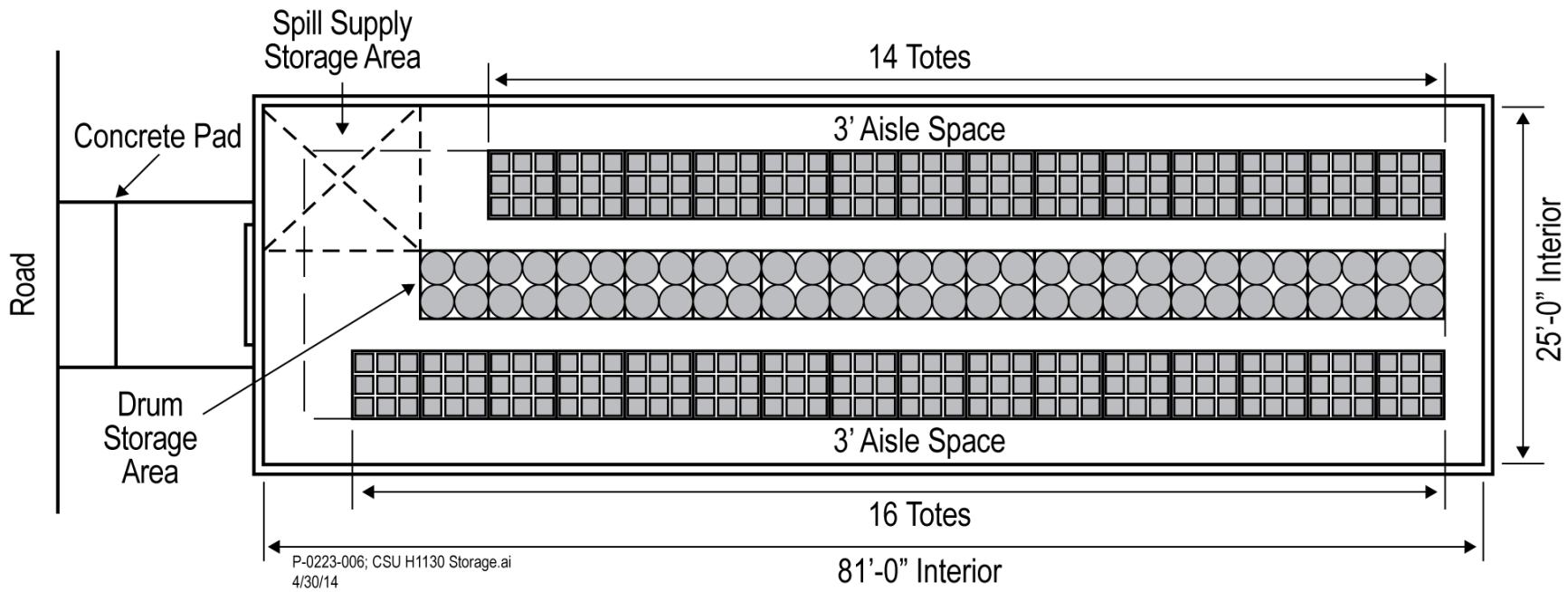

Figure 8-5. CSU H1103 General Storage Arrangement

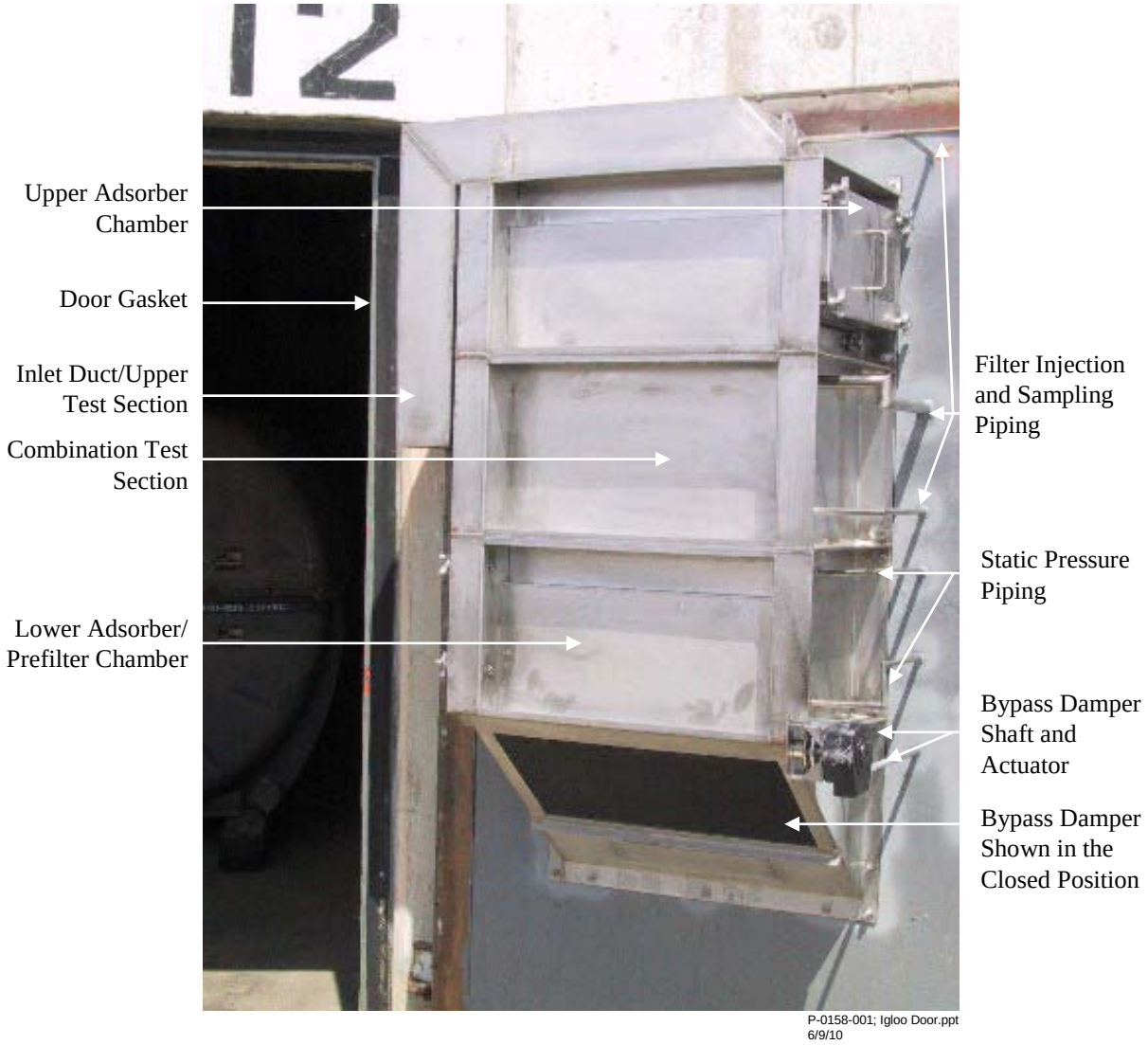

Figure 8-6. CSU Door with Filter System Installed

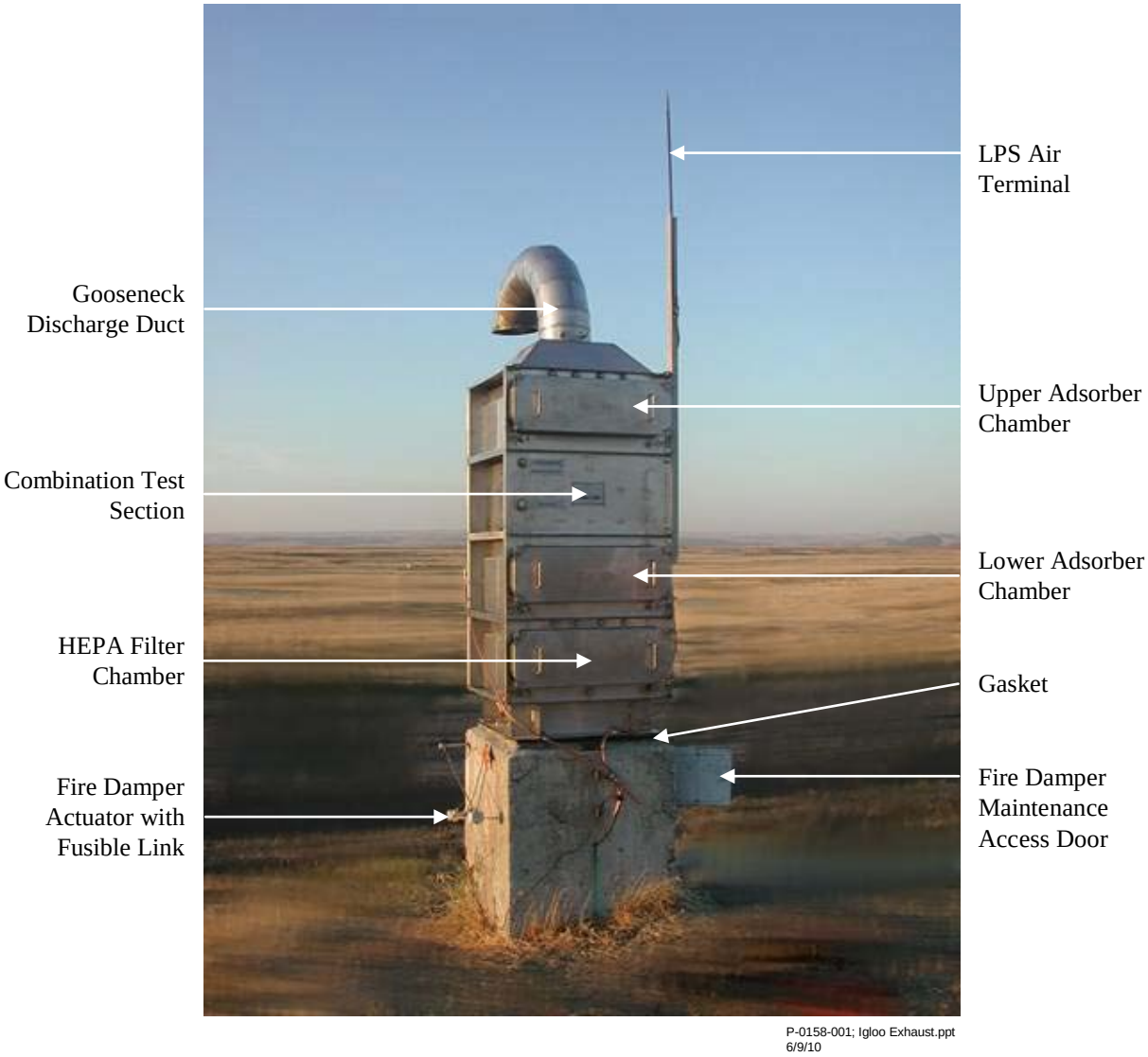

Figure 8-7. CSU Exhaust Stack with Filter System Installed

Figure 8-8. Example of a Secondary Containment Pallet

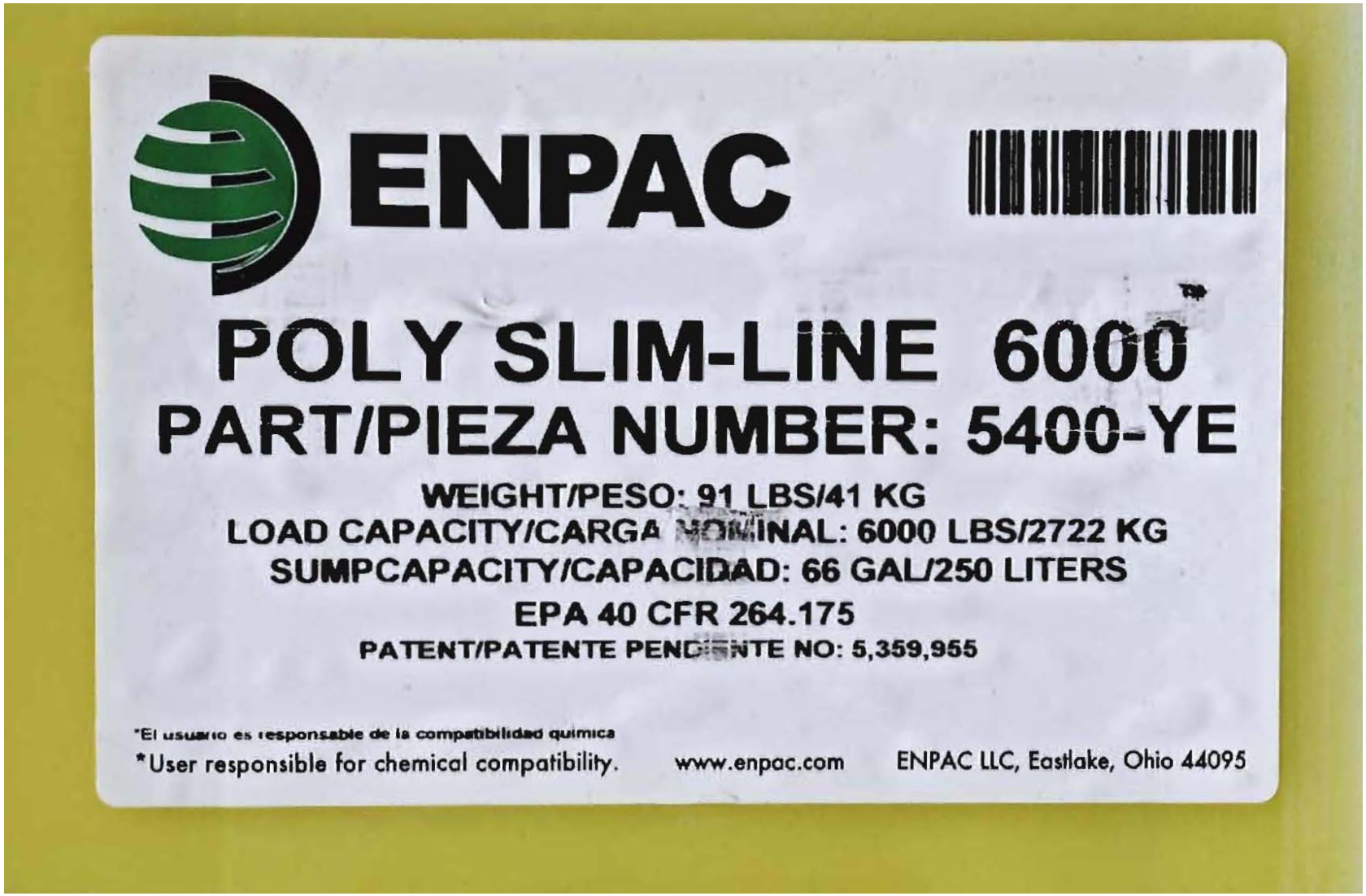

Figure 8-9. Load Capacity of Secondary Containment Pallet

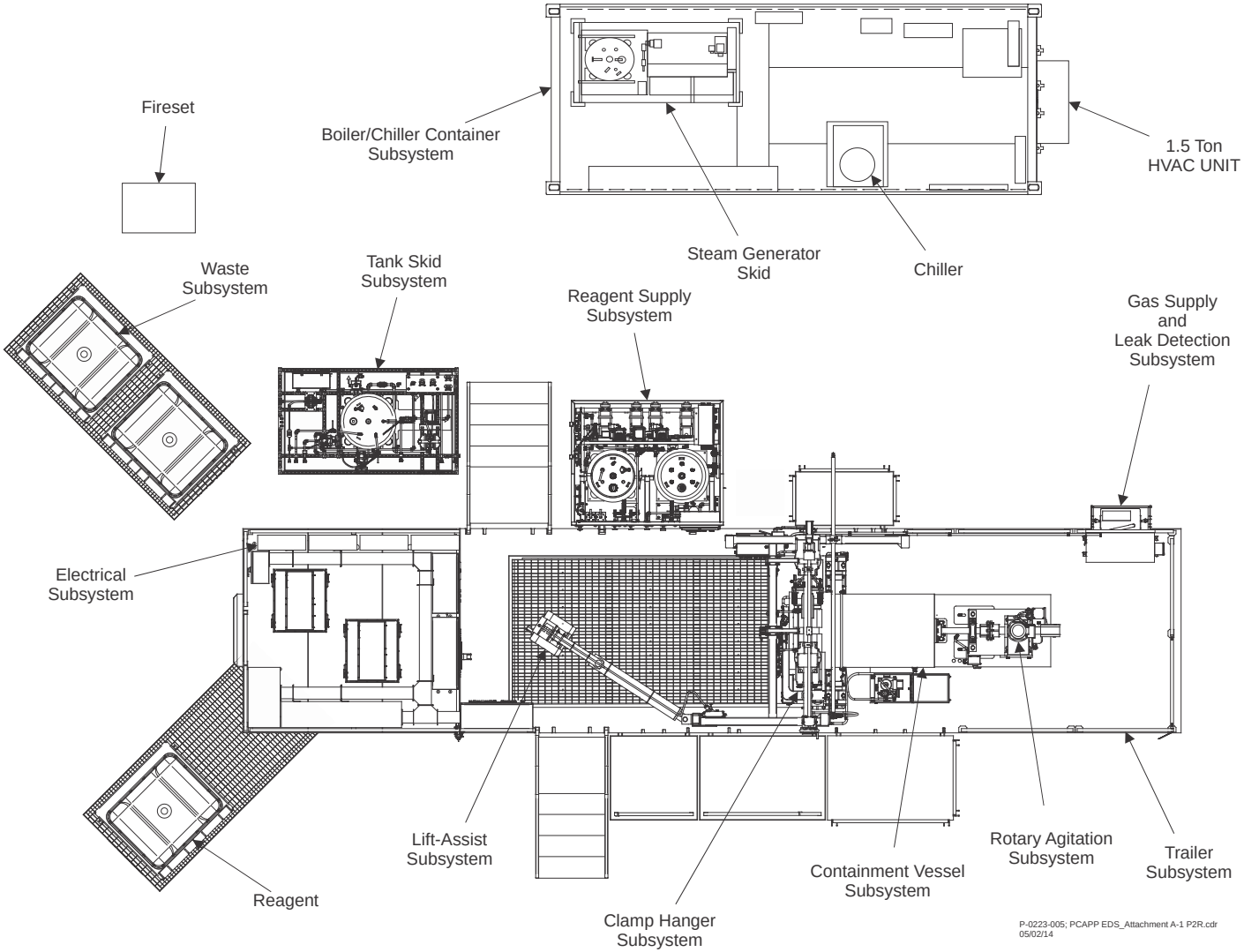

Figure 8-10. Major Components of EDS P2R

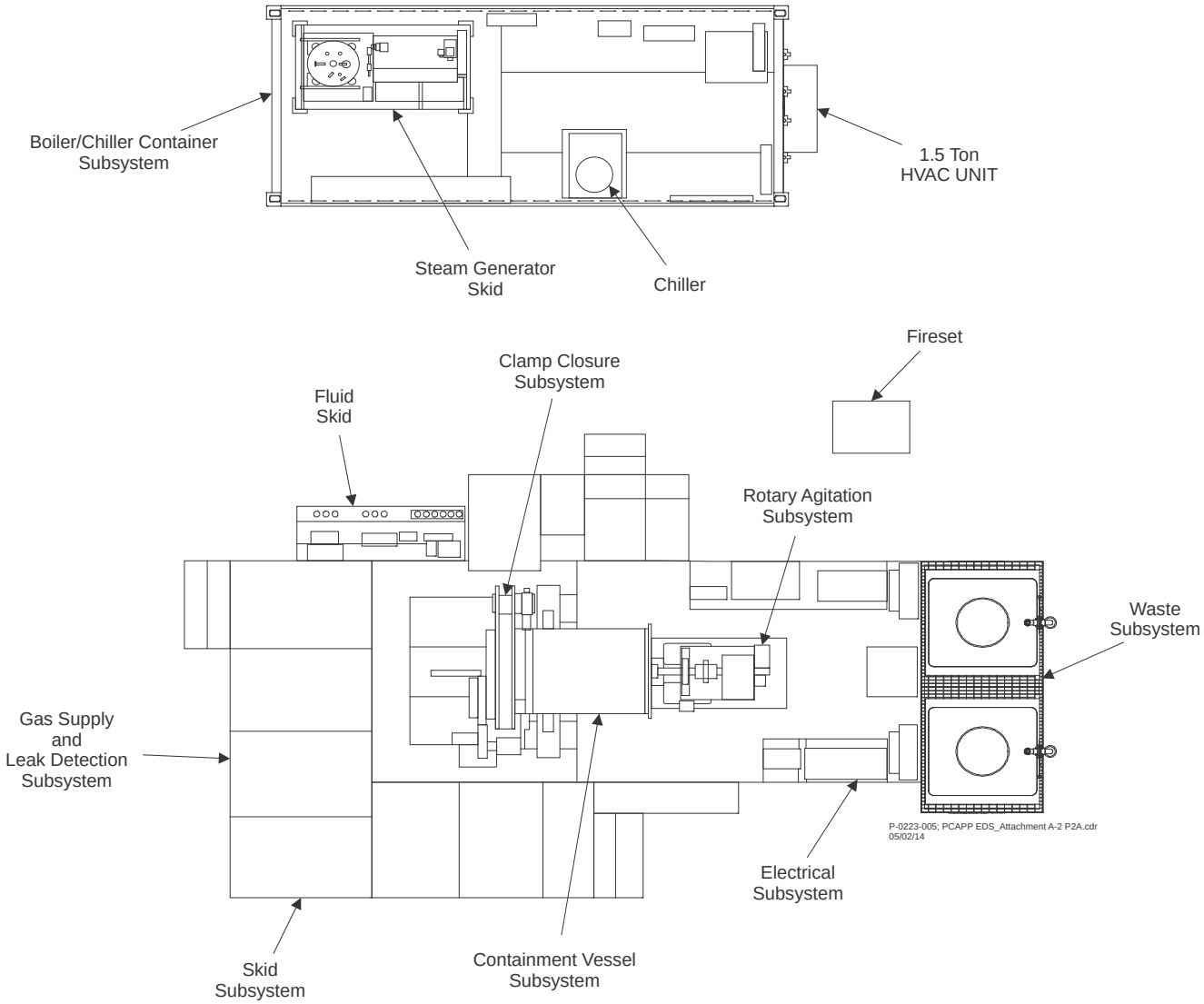

Figure 8-11. Major Components of EDS P2A

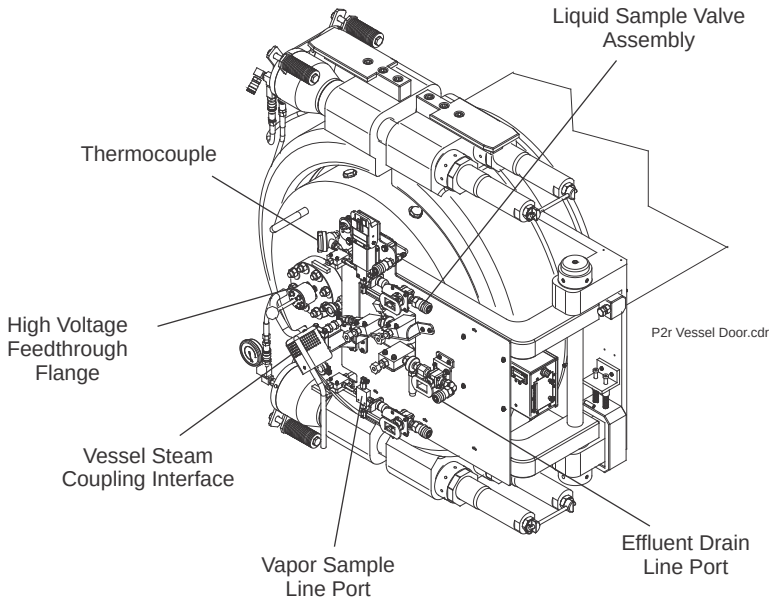

Figure 8-12. EDS P2R Containment Vessel Door

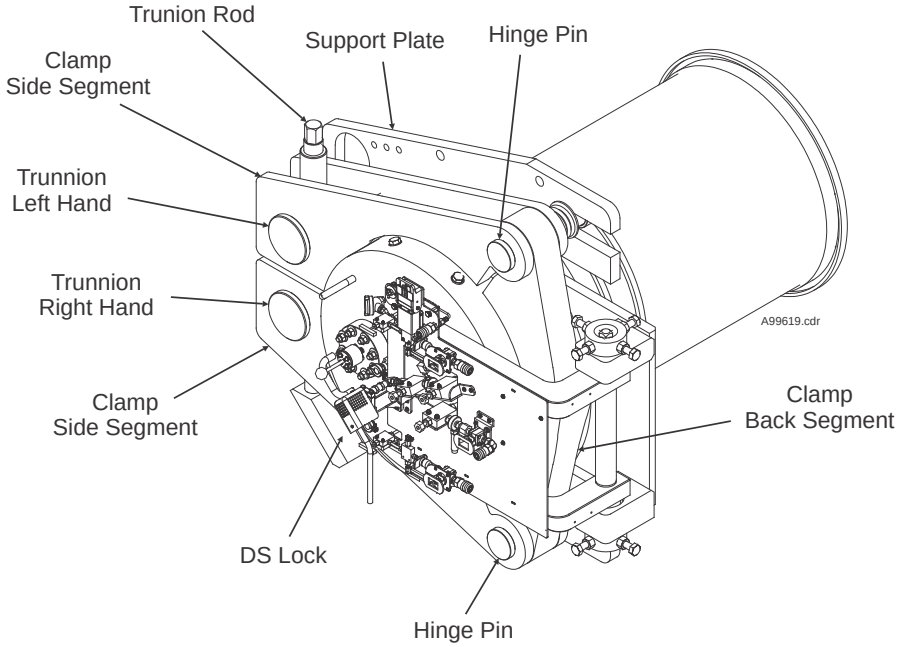

Figure 8-13. EDS P2A Containment Vessel Door

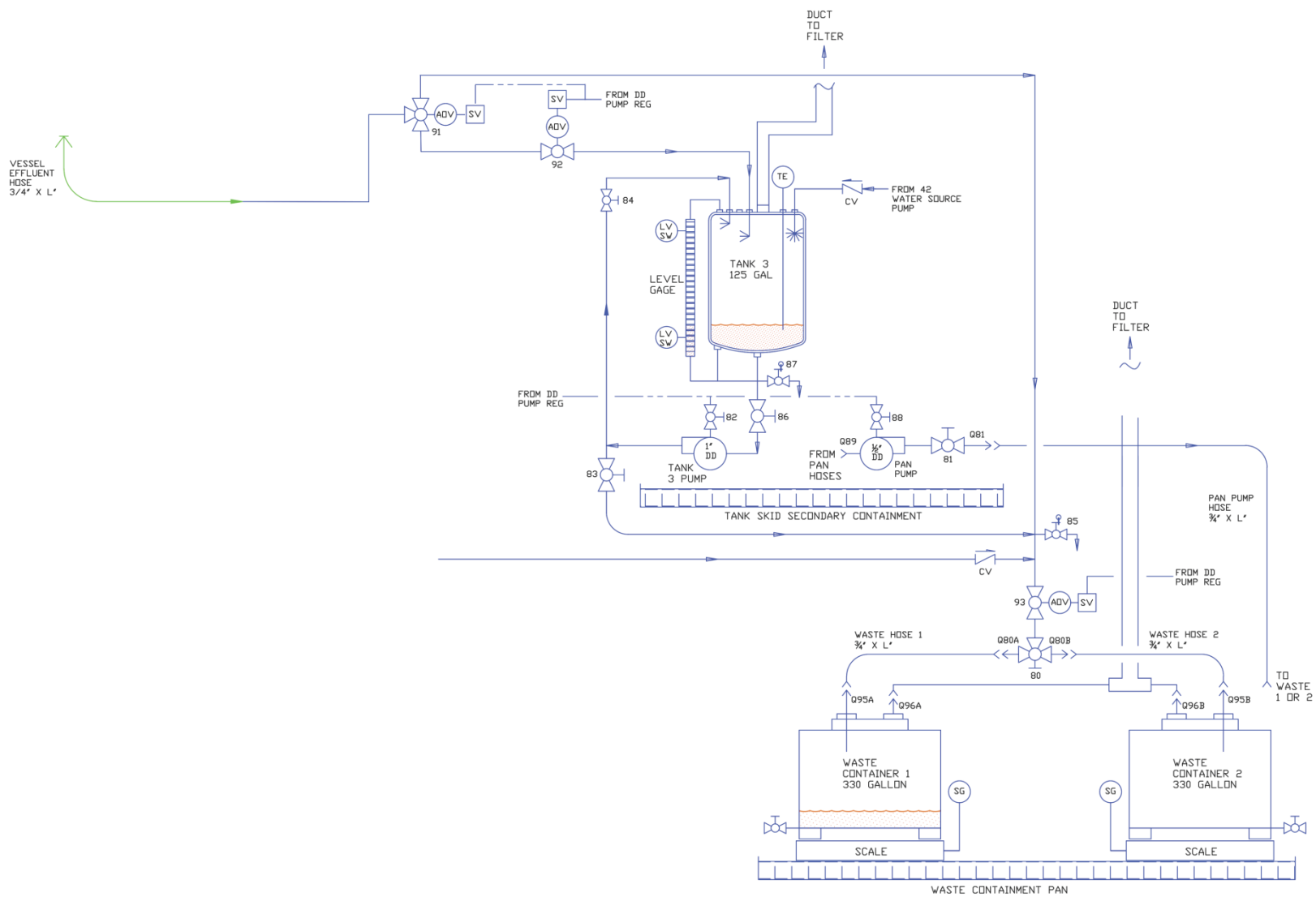

Figure 8-14. Containment Vessel Waste Transfer

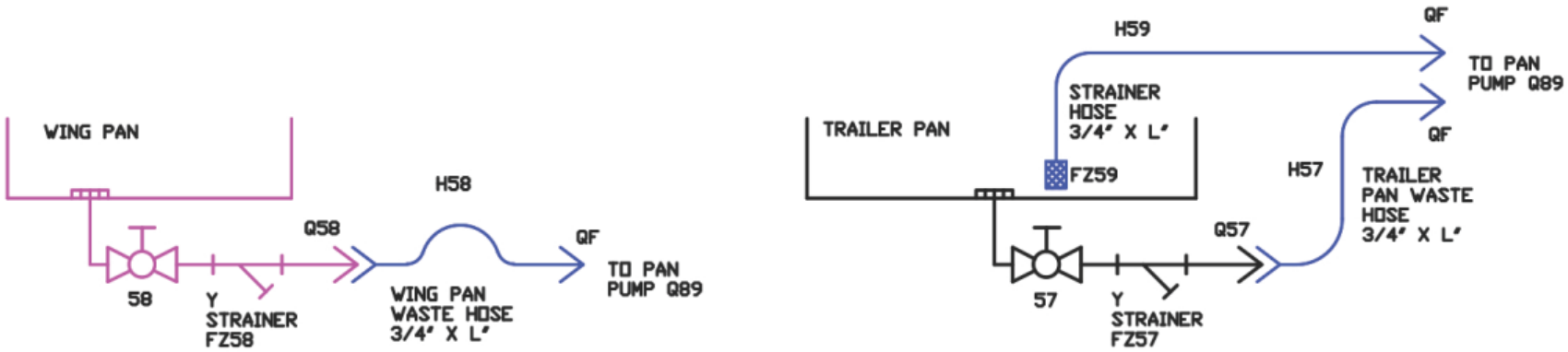

Figure 8-15. Secondary Containment Pan Waste Transfer

Liquibasin
Product Number 361626

LIQUIBASIN™ SPECIFICATIONS		
Capacity	Dimensions	Product Number
185 gal (700 l)	52″ x 52″ x 20″ 1321 mm x 1321 mm x 508 mm	361613
448 gal (1695 l)	54″ x 120″ x 20″ 1372 mm x 3048 mm x 508 mm	361711
748 gal (2831 l)	90″ x 120″ x 20″ 2286 mm x 3048 mm x 508 mm	361626

Custom sizes are available to meet your specific needs

Figure 8-16. Example of Waste Tote Secondary Containment Pallet

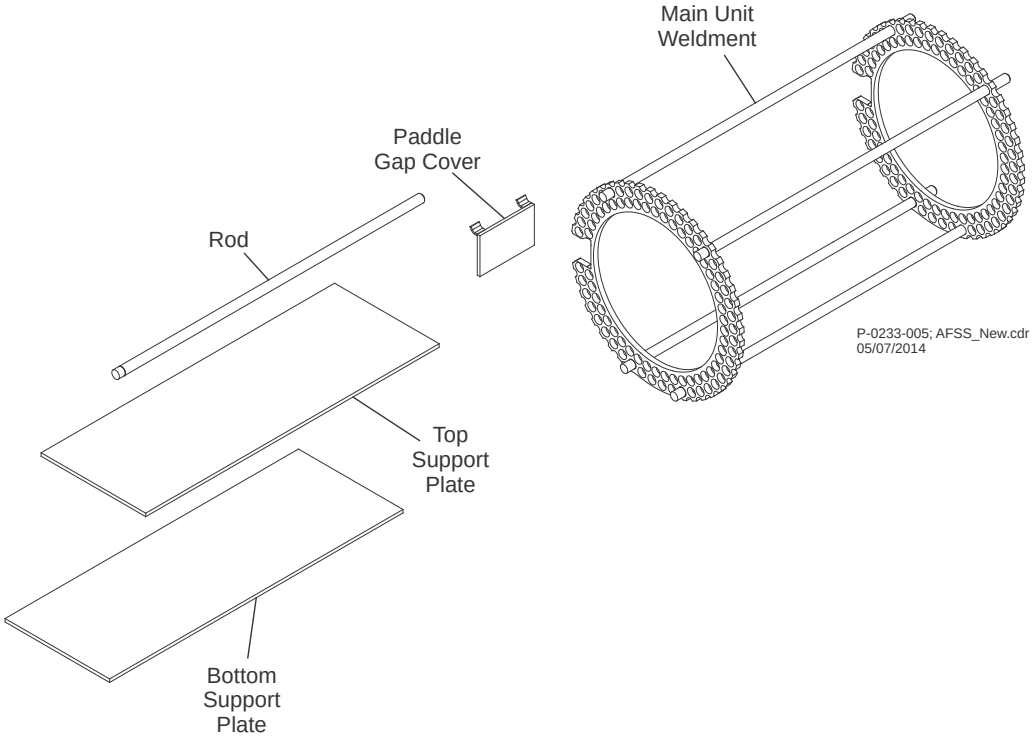

Figure 8-17. AFSS

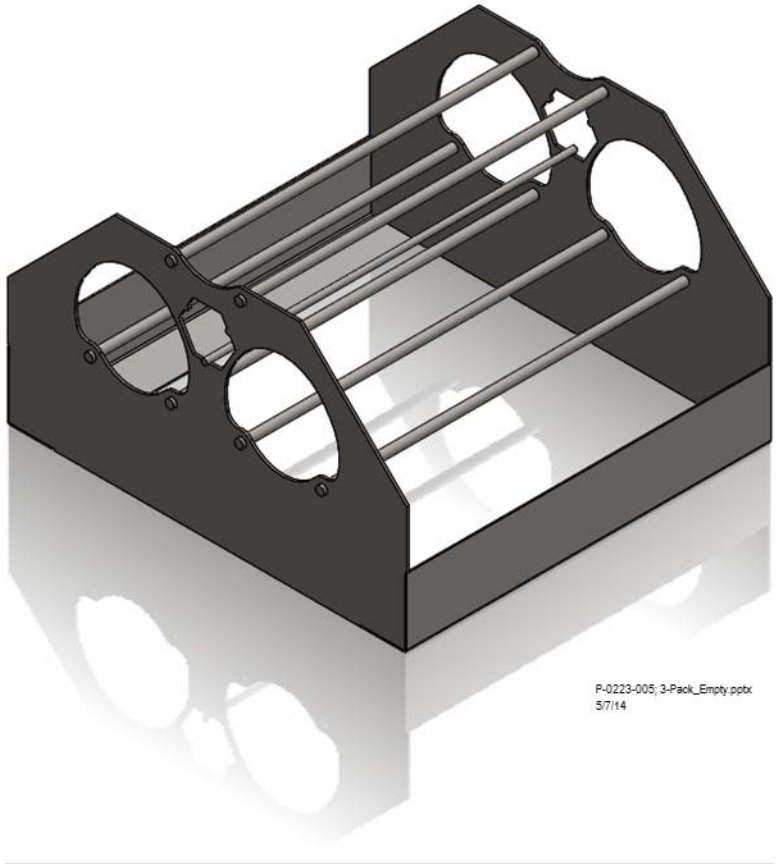

Empty

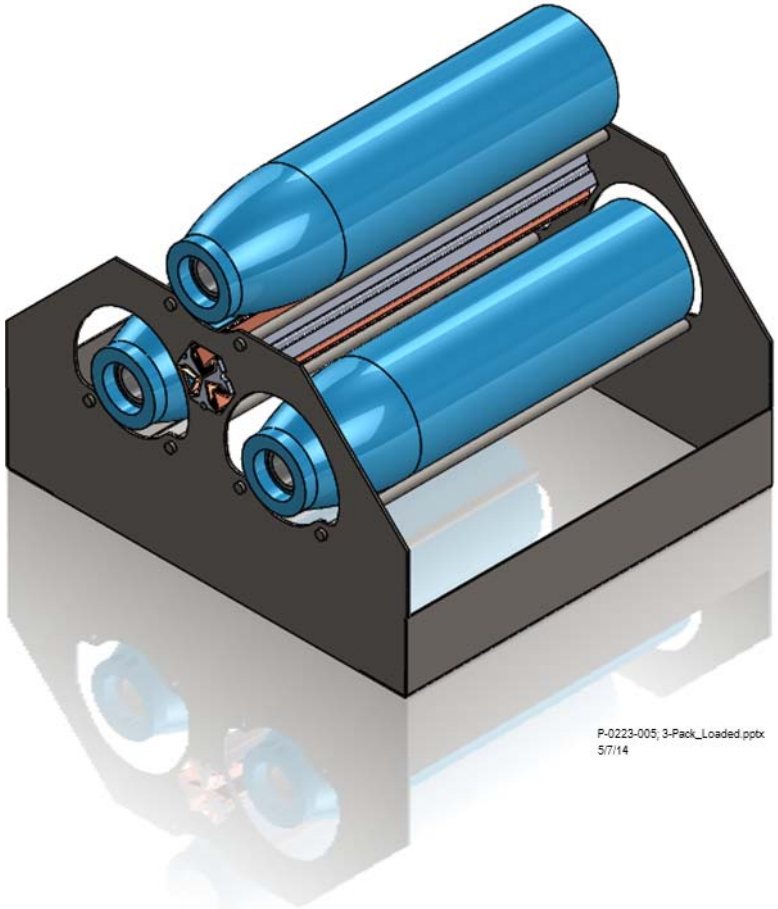

Loaded

Figure 8-18. 3-Pack Munition Holder

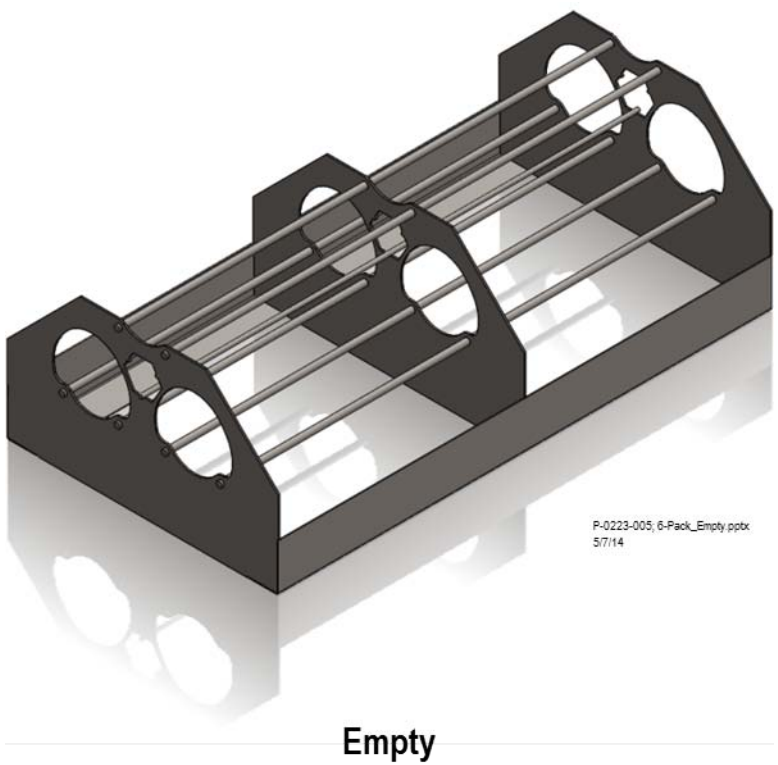

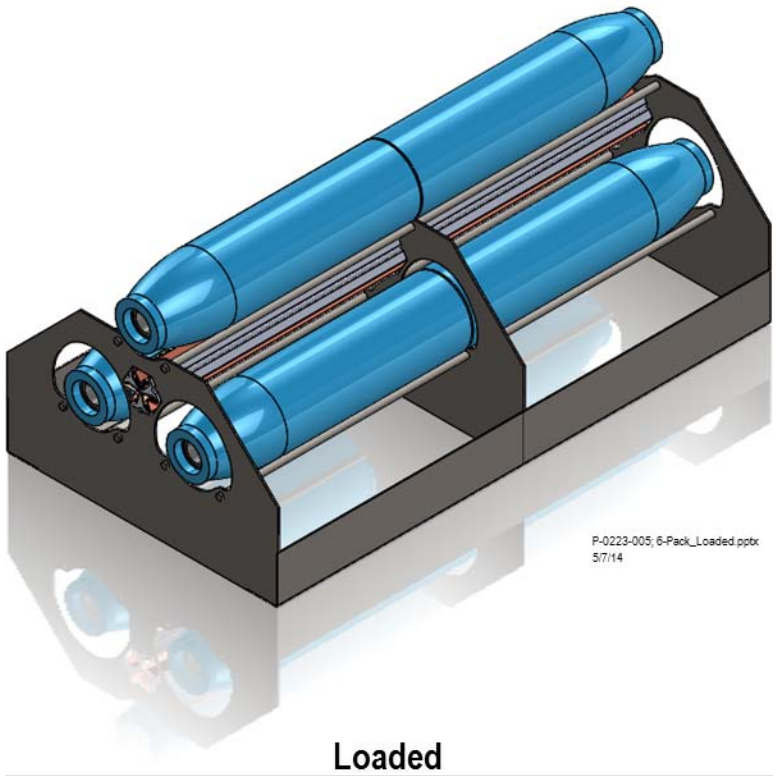

Figure 8-19. 6-Pack Munition Holder

(This page intentionally left blank.)

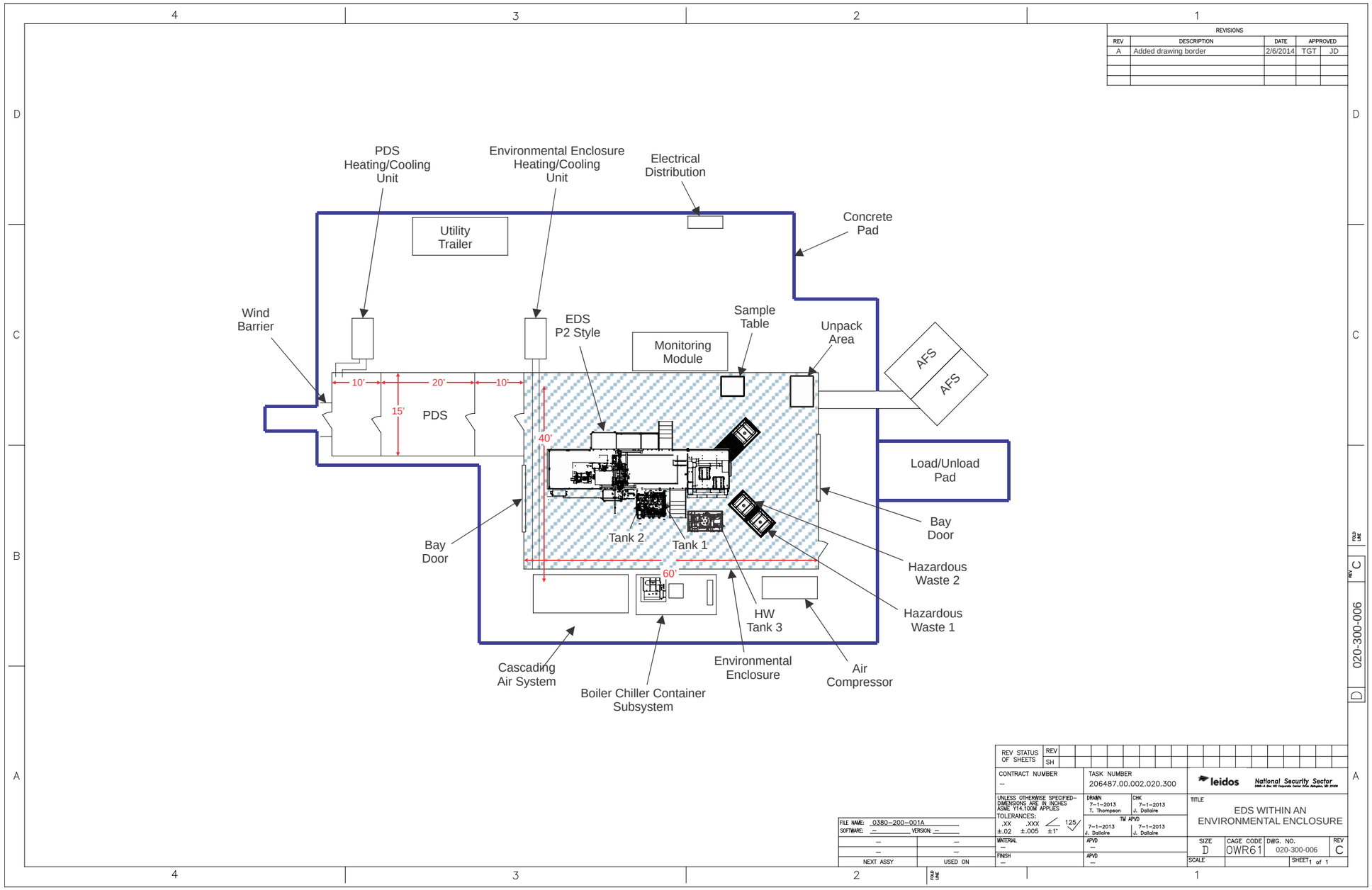

Figure 8-20. Example of an EDS Within an Environmental Enclosure

Table 8-1. Chemical Fills, Treatment Reagents, and Treatment Levels

Chemical Fill	Treatment Reagent	Treatment Level[a]
Sulfur Mustards (HD/HT)[b]	90 vol.% MEA	≤ 50 mg/L mustard agent

Notes:

[a] When treating chemical agent fills, the neutralent and rinsewaters must meet the treatment level shown.
[b] HD/HT will be measured as H.

MEA = monoethanolamine
mg/L = milligram per liter
vol.% = volume percent

Table 8-2. Overpack/Container Types

Munition/Item	Overpack/Container
155mm projectiles	9" x 41" SRC 12" x 56" SRC
105mm Projectiles	Retrofit M55 SRC, 5.4" x 36" 7" x 27" SRC
4.2-inch Mortars	7" x 27" SRC Retrofit M55 SRC 5.4" x 36"
DOT Cylinders 3A	7" x 27" SRC (if overpacked)
Miscellaneous Items (for example, propellant, ignition cartridges, etc.)	M2A1 Ammunition Box 30-gallon drum 55-gallon drum Propellant Charge Can

Notes:

DOT = Department of Transportation
SRC = single round container

DOT cylinders where used imply DOT bottles and are interchangeable.

Table 8-3. EDS Hazardous Waste Approved Storage Locations

Hazardous Waste Description	Liquid or Solid	CSU H1102	CSU H1103	Roll-off Container Storage Area
Overpacked Waste and Leakers from PCD (pretreatment)	L/S	X		
Decontaminated M2A1 Cans	S		X	X
Decontaminated Empty Metal Overpacks	S		X	X
Neutralent and Rinsates	L		X	
Used Decontamination Solutions and Containment Pan Liquids	L		X	
Miscellaneous Liquid Wastes	L		X	
Decontaminated Metal Parts and Fragments < 1 VSL[a]	S		X	X
Decontaminated Dunnage/Packing Material/Pallets < 1 VSL[b]	S		X	
Non-contaminated Dunnage/Packing/Pallets	S		X	X
Spent Prefilters and HEPA Filters from the Environmental Enclosure AFS < 1 VSL	S		X	X
Spent Carbon from the Environmental Enclosure AFS and the CSU H1102 Igloo Containment System[c] < 1 VSL	S		X	
Personal Protective Equipment (PPE) < 1 VSL	S		X	
Non-contaminated PPE				X
Miscellaneous Solid and Liquid Wastes as a Result of Support, Maintenance, and Cleanup Activities < 1 VSL[c]	S/L		X	
Laboratory Liquid Waste	L		X	
Laboratory Solid Waste < 1 VSL	S		X	

Hazardous Waste Description	Liquid or Solid	CSU H1102	CSU H1103	Roll-off Container Storage Area
Grayloc® Seal and O-rings < 1 VSL	S		X	X
Unexploded or Untreated Energetics or Propellant Material and/or Residual Solidified Agent Following Initial EDS Treatment (to be stored temporarily until retreated)	S	X		
Boiler Blowdown Solids	S		X	
Empty Containers < 1 VSL Headspace	S			X

Notes:

Hazardous wastes in CSU H1103 and Roll-off Container Storage Area
Contaminated porous wastes will not to be placed in roll-offs.
H1102 Liquid and solid wastes on secondary containment pallets
H1103 Totes containing liquids and other containers on secondary containment pallets
Totes are also Intermediate Bulk Containers (IBCs).
Contaminated SRCs will be placed in 55-gallon drums or larger approved DOT containers (not to exceed the volume of secondary containment) with bleach for offsite shipment.

a) Will use up to 95 gallons in size metal or plastic drum in CSU H1103 in Roll-off Container Storage Area
b) Any wooden pallets must be disassembled (cutting, grinding, or breaking considered treatment) and all waste generated placed in waste container.
c) Must be characterized for incompatibility and placed in closed container; totes for liquids, drums for solids.

Table 8-4. EDS P2R and P2A Physical Characteristics Summary

Component	P2R	P2A
Trailer/Skid Subsystem		
Gross Weight of Trailer/Skid	Approximately 57,300 pounds	Approximately 29,000 pounds
Dimensions of Trailer/Skid	39.5 feet long x 8.5 feet perimeter frame dual-axle, single-drop trailer with a fold-up wing	20 feet long x 8 feet wide frame
Dimensions of Trailer/Skid Secondary Containment Pan	154.75 inches long x 69 inches wide by 2.34-5.00 inches deep (approximately 166 gallons)	Same as P2R
Working Surface of the Trailer/Skid	Approximately 42 inches above the ground	Approximately 16 inches above the ground
Leveling Jacks	Four leveling jacks	N/A; Fixed support feet
Access to Trailer/Skid	Four fold-down steps on each side midway to the front and at the front corners of the trailers	Platform with steps attach to front of skid
Safety Railings	4.5-foot high safety railing surrounds the trailer	4.5-foot high safety railing surrounds working platform and portion of skid
Additional Feature	Four fold-down platform extensions for additional work area and accessibility	Three detachable platforms for additional work area and accessibility
Containment Vessel Subsystem (Measurements are approximate.)		
Outside Length	63 inches	Same as P2R
Outside Diameter	35 inches	
Inside Length	56 inches	
Inside Diameter	29 inches	
Side Wall Thickness	3.655 inches	
Rear Wall Thickness	6.5 inches	
Assembly Weight	18,000 pounds	
Design Volume	22 cubic feet or 160 gallons	

Table 8-4. EDS P2R and P2A Physical Characteristics Summary (Continued)

Component	P2R	P2A
Containment Vessel Subsystem (continued)		
Working Volume Maximum Explosive Rating[a] Munition Size Capacity Maximum Diameter Maximum Length Chemical Fill Capacity Maximum Munitions Load Protection Plates Access Door to the Interior of the Containment Vessel	112 gallons 9 pounds TNT equivalent 10 inches 40 inches 50 pounds or less Supports 1 to 6 munitions per detonation Stainless steel blast protection plates A 9-inch thick door provides access to the interior of the Containment Vessel	Same as P2R, except there are no paddles
Clamp Hanger Subsystem	Two sets of clamp hangers with proximity sensors, two drive-pin assemblies and a lead screw	N/A
Clamp Closure Subsystem	Two Grayloc® clamp halves attached to four threaded steel rods with hydraulic nuts	Three-piece Grayloc clamp, with support plate and pneumatic drive screw
Hydraulic Nut Subsystem	Provides required pre-load on P2R Containment Vessel clamp to ensure gas-tight vessel operation. Consists of hydraulic nut pump, threaded rods, and hydraulic nuts.	N/A
Lift Assist Subsystem	Lift Assist: Comprised of articulated arm jib crane with a computer controlled electric winch Winch Dimensions: Approximately 20.5 inches wide x 9.5 inches high x 21 inches deep Winch Lifting Capacity: 500 pounds Power Requirement: 220 VAC, Max Current Draw is 15 amps	Same as P2R

Table 8-4. EDS P2R and P2A Physical Characteristics Summary (Continued)

Component	P2R	P2A
Lift Assist Subsystem (Continued)	Approximate Weight: 133 pounds Articulated Arm Jib Crane Dimensions: Approximately 7 feet long boom (fully extended) and 2 feet high above the clamp hanger structure Construction: Mild steel painted with epoxy paint Lifting Capacity: 500 pounds	
Rotary Agitation Subsystem	Rotates 360° at 1 rpm for 15 rotations and then reverses for the same time and revolutions 3-hp, 480-volt, 3-phase motor	Same as P2R
Reagent Supply Subsystem		
Supply Tanks Pumps	Two supply tanks; one tank holds water while the other tank holds reagent Two air-driven pumps; one primary, one backup per supply tank	Same as P2R Two air-driven pumps; one primary, one backup per supply tank
Dimensions of Secondary Pan	72.34 inches long x 58.69 inches wide x 5.821 inches deep (approximately 107 gallons)	N/A
Waste Transfer Subsystem	Consists of Intermediate Tank and two liquid waste containers Each waste container is provided with secondary spill containment.	Same as P2R
Electrical Subsystem	Two 480-volt distribution panels and two 120-volt distribution panels for the trailers and their subsystem 800 kW, 3-phase, 277/480 volt diesel generator for backup power	Same as P2R
Explosive Opening Subsystem	Two separate firing systems capable of being positioned 50 feet from the trailer. Control module can be moved up to 300 feet from the firing system panel for remote operation.	Same as P2R

Table 8-4. EDS P2R and P2A Physical Characteristics Summary (Continued)

Component	P2R	P2A
Gas Supply and Leak Detection Subsystem	Mounted on trailer	Separate cart
Dimensions of Debris Pan	Approximately 52 inches long x 30 inches wide x 11.5 inches deep (approximately 50 gallons)	Same as P2R

Reference: Table compiled from information contained in the Project Manager for Non-Stockpile Chemical Materiel *Operations and Maintenance Manual for Explosive Destruction System Phase 2 Series*, current revision and *System Hazard Analysis for the Phase 2 Pilot Explosive Destruction System*, January 2012, and drawings and documents from Sandia National Laboratories, 2014.

Notes:

[a] Total net explosive weight including donor charges

amp = ampere
hp = horsepower
N/A = not applicable
P2A = Phase 2 Unit A
P2R = Phase 2 Unit R
rpm = revolutions per minute
TNT = trinitrotoluene
VAC = volts alternating current

Table 8-5. AFSS Characteristics Summary

Component/Information	Characteristics
Rods	1.25 inches diameter x 51.0 inches long; cold drawn steel
Support Plates	.1196 inches thick x 19.5 inches or 17.5 inches wide x 44 inches long; mild steel
Paddle Gap Cover	.5 inches thick x 4 inches tall x 10 inches long; hot roll steel
Main Unit Weldment	29 inches outside diameter x 23 inches inside diameter x 51.0 inches long
AFSS Weight	1,660 lbs
Inside Diameter	21.13 inches with rods in place

Note:

AFSS = Advanced Fragment Suppression System