APPENDIX 8-6

ADDITIONAL P2R DRAWINGS

(This page intentionally left blank.)

REVISIONS						
ISSUED BY	REV	DESCRIPTION	DATE	CAD	CHKR	APPVD
SNL\CA	A	INITIAL RELEASE	5/31/2014	JMW	LMC	JED

NOTES:

1. DIMENSIONING AND TOLERANCING PER ASME Y14.5, 1994.
2. ALL DIMENSIONS ARE IN INCHES AND APPROXIMATE.
3. MATERIAL: SEE BOM.

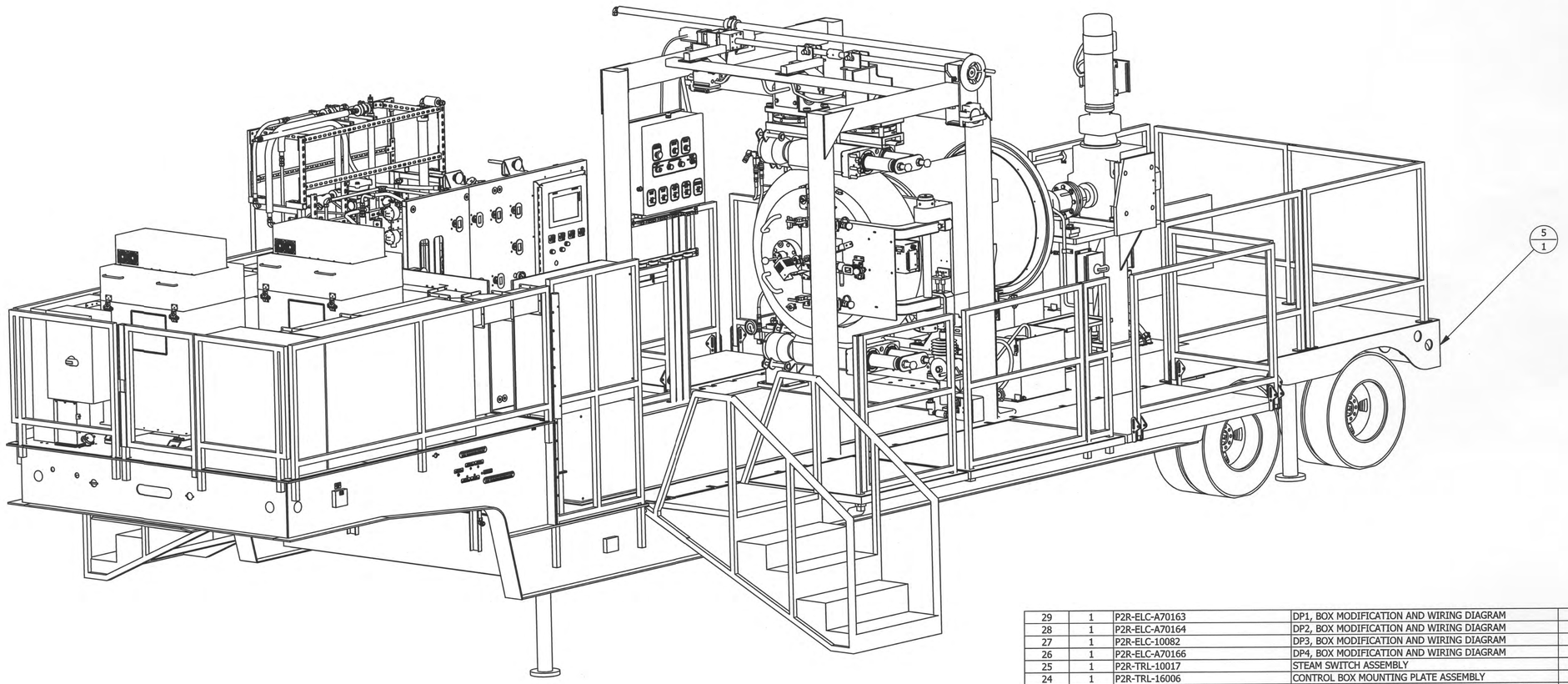

ITEM	QTY	PART NUMBER	DESCRIPTION	VENDOR
29	1	P2R-ELC-A70163	DP1, BOX MODIFICATION AND WIRING DIAGRAM	
28	1	P2R-ELC-A70164	DP2, BOX MODIFICATION AND WIRING DIAGRAM	
27	1	P2R-ELC-10082	DP3, BOX MODIFICATION AND WIRING DIAGRAM	
26	1	P2R-ELC-A70166	DP4, BOX MODIFICATION AND WIRING DIAGRAM	
25	1	P2R-TRL-10017	STEAM SWITCH ASSEMBLY	
24	1	P2R-TRL-16006	CONTROL BOX MOUNTING PLATE ASSEMBLY	
23	1	P2R-ELC-10079	TRAILER WIRING AND CABLE ASSEMBLY (NOT SHOWN)	
22	1	P2R-TRL-16004	HOSE GUIDE ASSEMBLY	
21	1	P2R-TRL-16003	HOSE CLIP ASSEMBLY	
20	1	A1614CHNFSS6	16 X 14 X 6 J BOX, TYPE 4X HINGED COVER	HOFFMAN
19	A/R		3/4 SS TUBING	
18	1	P2R-ELC-10073	PROCESS CONTROL PANEL ASSEMBLY	
17	1	P2R-ELC-10081	UTILITY PANEL ASSEMBLY	
16	1	P2R-TRL-A73780	HOSE DOCKING STATION ASSEMBLY	
15	1	P2R-ELC-A73820	200 AMP MAIN DISCONNECT SWITCH ASSEMBLY AND WIRING DIAGRAM	
14	1	P2R-TRL-A74404	P-306 HYDRAULIC NUT PUMP BOX WITH PUMP ASSEMBLY	
13	1	P2R-TRL-A69993	TOOL BOX ASSEMBLY	
12	1	P2R-ELC-10074	VESSEL CONTROL PANEL ASSEMBLY	
11	1	P2R-ELC-10080	HEATER POWER PANEL ASSEMBLY	
10	1	P2R-TRL-A69798	DRIVE POWER PANEL ASSEMBLY	
9	1	P2R-RSS-10050	AUXILIARY STEAM MANIFOLD	
8	1	P2R-RSS-10001	REAGENT SUPPLY SUB-SYSTEM PLATFORM	
7	1	P2R-TRL-A70151	DRIVE MOTOR AND MOUNT ASSEMBLY	
6	1	P2R-CNV-10001	P2R CONTAINMENT VESSEL ASSEMBLY	
5	1	P2R-TRL-10004	TRAILER HARDWARE AND SYSTEM ASSEMBLY	
4	1	P2R-TRL-10030	GAS AND SEAL VERIFICATION ASSEMBLY	
3	1	P2R-CHS-10001	CLAMP HANGING SYSTEM ASSEMBLY	
2	1	P2R-TRL-A68563	CASTER MOUNT ASSEMBLY	
1	1	P2R-TRL-10003	TRAILER MODIFICATION	

Parts List

COLORADO REGISTERED DONALD WAYNE JENKINS 32358 PROFESSIONAL ENGINEER 6/13/14

DEPARTMENT OF THE ARMY
RECOVERED CHEMICAL MATERIEL DIRECTORATE
E4585 HOADLEY ROAD
ABERDEEN PROVING GROUND, MD 21010-5424

EXPLOSIVE DESTRUCTION SYSTEM
P2R SYSTEM

ORIGINAL ISSUE APPROVALS	DATES
DESIGNED BY: G. BELLOUMINI	
DRAWN BY: G. BELLOUMINI	5/6/2014
CHECKED BY: L. CLEMON	6/4/2014
APPROVED BY: J. DIDLAKE	5/31/2014
MODEL AND DRAWING IDENTIFICATION INFORMATION	
DRAWING: P2R-TRL-10001.idw	
MODEL: P2R-TRL-10001.iam	

NEXT ASSEMBLY	USED ON
P2R-TLA-10001	P2R
APPLICATION	

SANDIA NATIONAL LABORATORIES
P.O. BOX 969
LIVERMORE, CA 94550-0969

ORIGIN INVENTOR 2014

TITLE: P2R TRAILER ASSEMBLY

ENGLISH | PART CLASSIFICATION: UNCLASSIFIED | SIZE: E | DRAWING NUMBER: P2R-TRL-10001 | ISSUE: A

THIRD ANGLE PROJECTION | DRAWING CLASSIFICATION: UNCLASSIFIED | CAGE 14214 | SCALE NTS | SHEET 1 OF 3

STATUS RELEASED

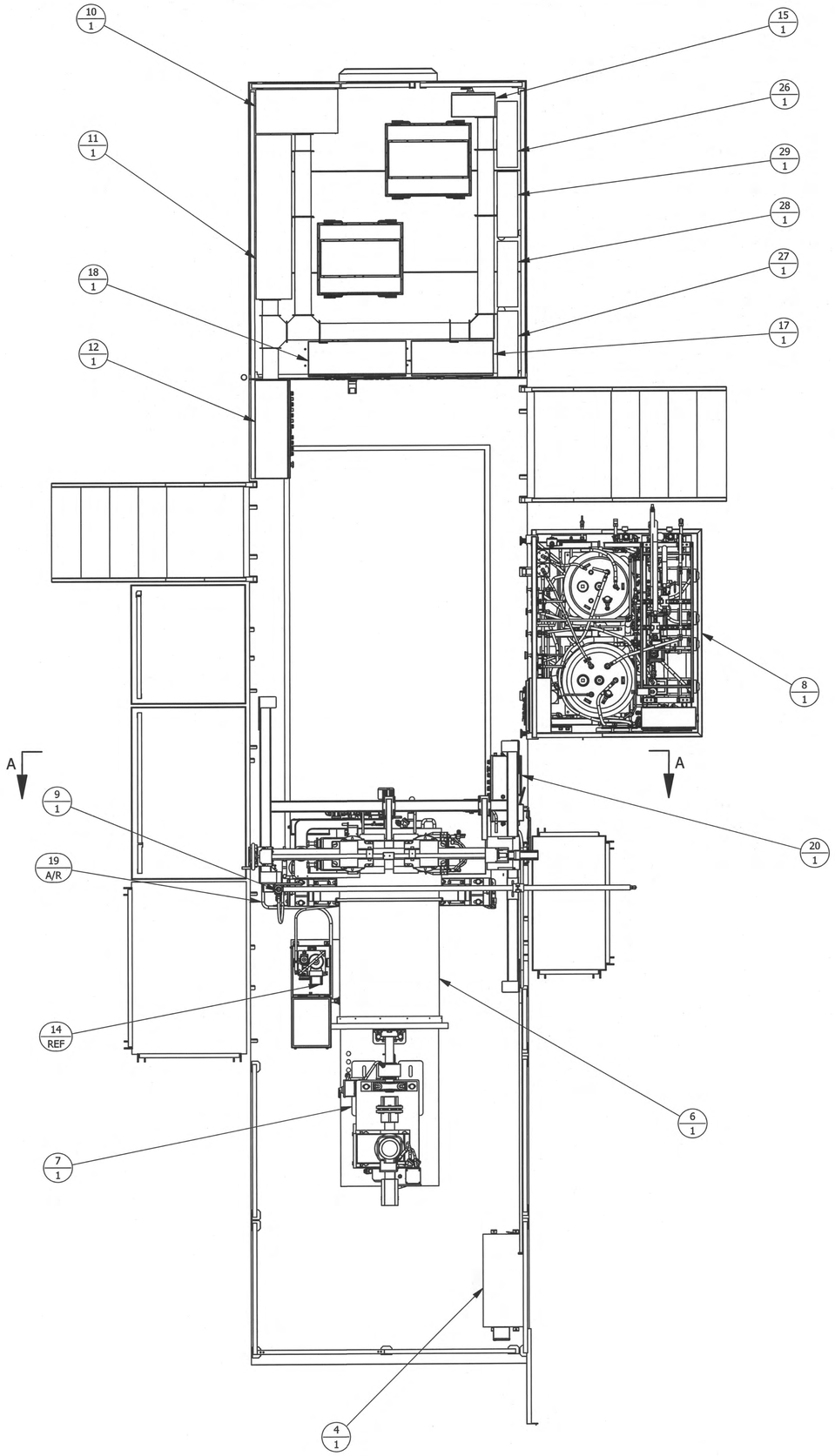

COLORADO REGISTERED DONALD WAYNE 32358 PROFESSIONAL ENGINEER 6/18/14

		TITLE: P2R TRAILER ASSEMBLY
P2R-TLA-10001	P2R	
NEXT ASSEMBLY	USED ON	SIZE: E · DRAWING NUMBER: P2R-TRL-10001 · ISSUE: A
APPLICATION		
DRAWING: P2R-TRL-10001.idw		CAGE 14214 · SCALE NTS · Sheet 2 of 3
Model: P2R-TRL-10001.iam		STATUS: RELEASED

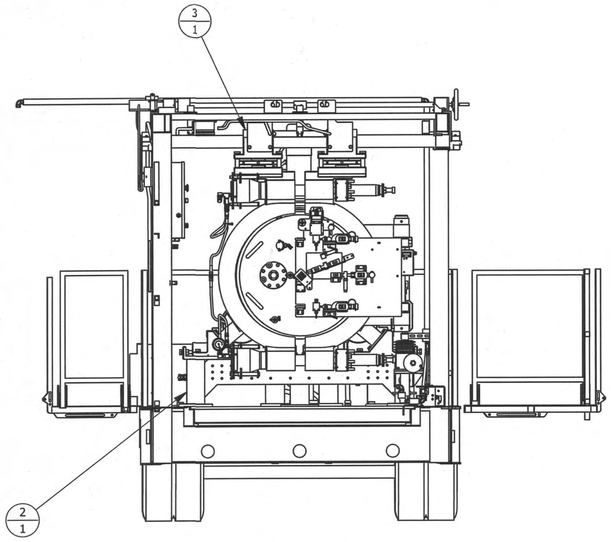

SECTION A-A
ROTATED 180° FOR CLARITY

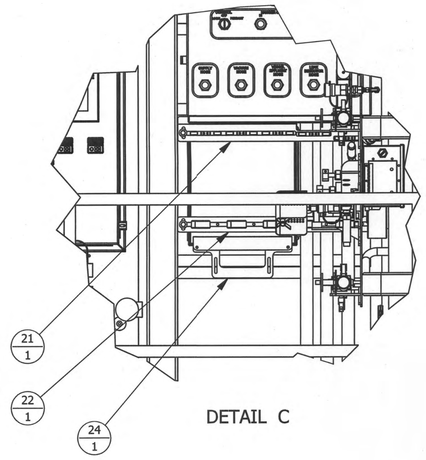

DETAIL C

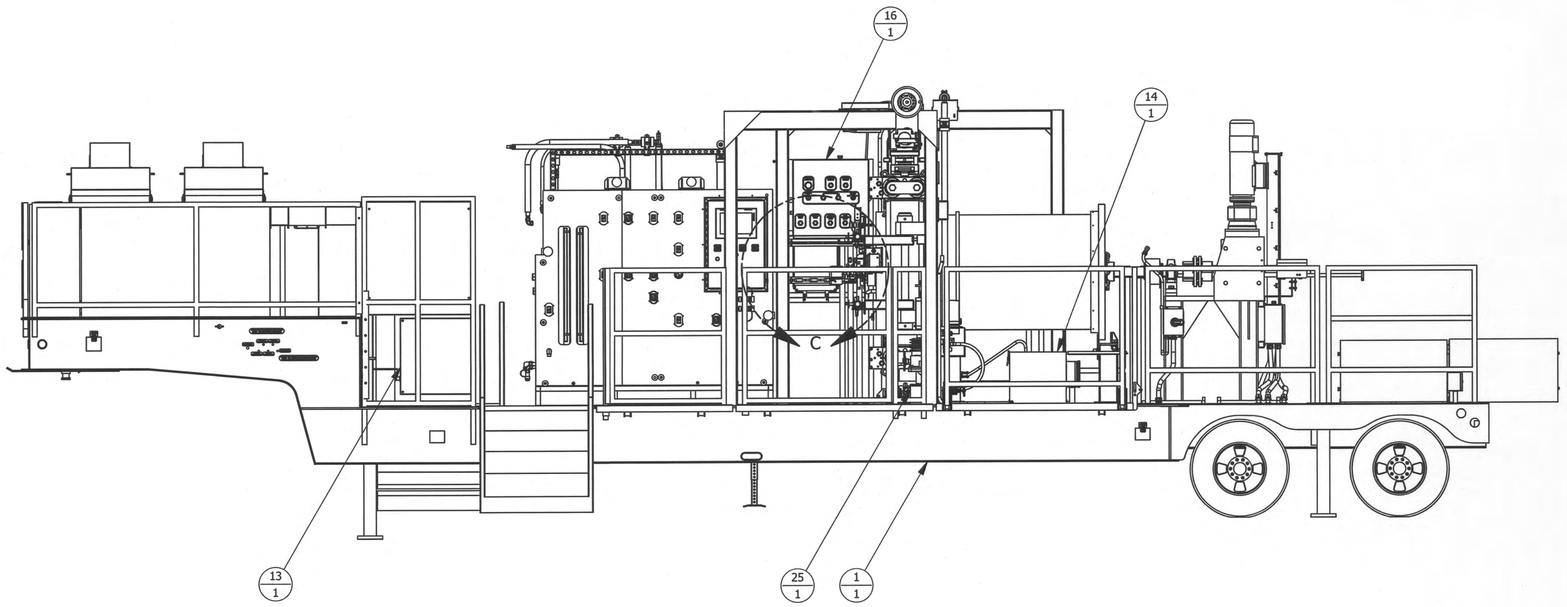

COLORADO REGISTERED
DONALD WAYNE
32358
PROFESSIONAL ENGINEER
6/18/14

		TITLE			
		P2R TRAILER ASSEMBLY			
P2R-TLA-10001	P2R				
NEXT ASSEMBLY	USED ON	SIZE E	DRAWING NUMBER P2R-TRL-10001		ISSUE A
APPLICATION					
DRAWING: P2R-TRL-10001.idw		CAGE 14214	SCALE NTS	Sheet 3 of 3	
Model: P2R-TRL-10001.iam		STATUS: RELEASED			

		REVISIONS				
ISSUED BY	REV	DESCRIPTION	DATE	CAD	CHKR	APPVD
SNL\CA	A	INITIAL RELEASE	6/8/2014	DPB	LMC	JED

NOTES:

1. DIMENSIONING AND TOLERANCING PER ASME Y14.5, 1994.
2. MATERIAL: SEE BOM

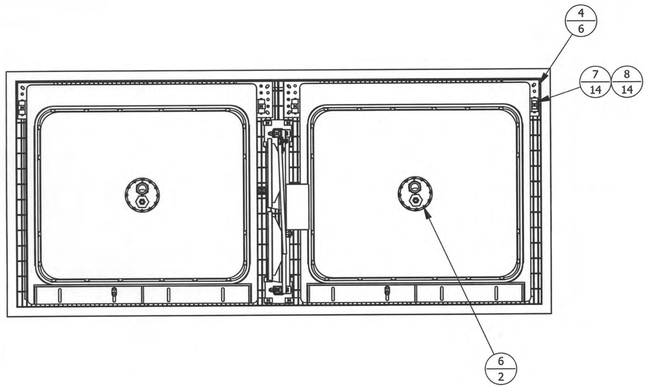

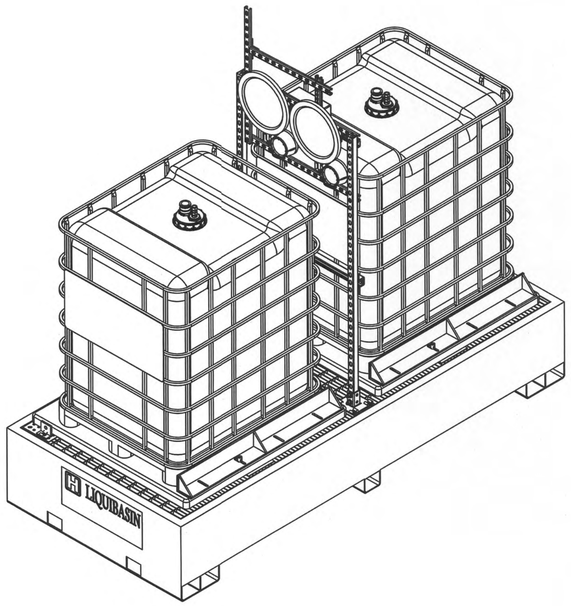

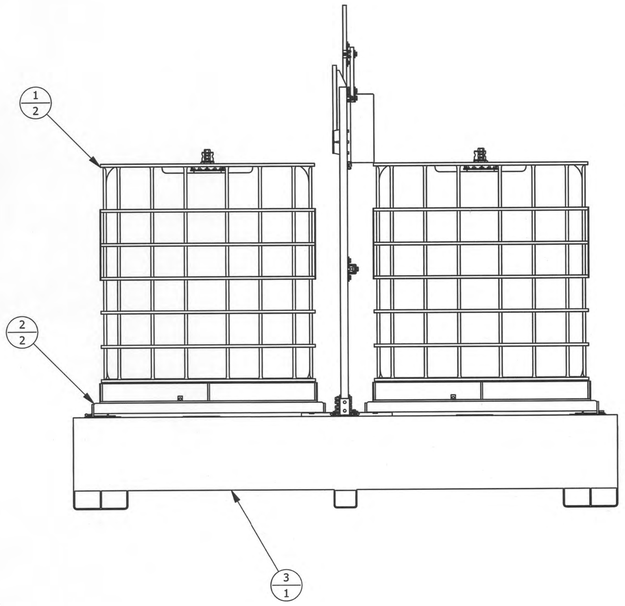

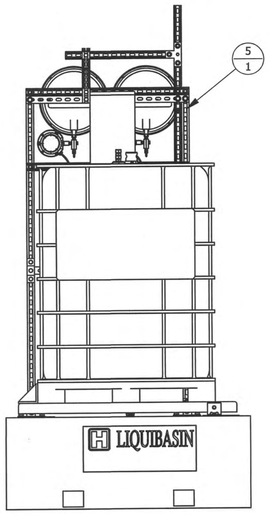

COLORADO REGISTERED
DONALD WAYNE BURNEY
32358
PROFESSIONAL ENGINEER
6/18/14

ITEM	QTY	PART NUMBER	DESCRIPTION	VENDOR
8	14		LOCK WASHER, 5/16"	
7	14	62285T62	SWIVEL-LOCK BAR GRATING FASTENER, GALVANIZED STEEL	McMASTER-CARR
6	2	P2R-WTS-20007	IBC CAP ASSEMBLY	
5	1	P2R-WTS-11012	SCALE READOUT MOUNTING ASSEMBLY	
4	6	P2R-WTS-11005	IBC SCALE MOUNTING PLATE	
3	1	361711	LIQUIBASIN SECONDARY CONTAINMENT BASIN, 448 GAL.	HOOVER
2	2	50-12D50TB	IBC TOTE BIN SCALE	FORCE FLOW
1	2	710405	UN31HA1/Y, 330 GAL	HOOVER

Parts List

DEPARTMENT OF THE ARMY
RECOVERED CHEMICAL MATERIEL DIRECTORATE
E4585 HOADLEY ROAD
ABERDEEN PROVING GROUND, MD 21010-5424

EXPLOSIVE DESTRUCTION SYSTEM
P2R SYSTEM

ORIGINAL ISSUE APPROVALS		DATES
DESIGNED BY:	D. BURNEY	
DRAWN BY:	D. BURNEY	6/2/2014
CHECKED BY:	L. CLEMON	6/2/2014
APPROVED BY:	J. DIDLAKE	6/2/2014

MODEL AND DRAWING IDENTIFICATION INFORMATION		
DRAWING: P2R-WTS-11001.idw	P2R-TLA-10000	P2R
MODEL: WASTE IBC SKID ASSEMBLY.iam	NEXT ASSEMBLY	USED ON
	APPLICATION	

SANDIA NATIONAL LABORATORIES
P.O. BOX 969
LIVERMORE, CA 94550-0969

ORIGIN INVENTOR 2014

ENGLISH

PART CLASSIFICATION UNCLASSIFIED

THIRD ANGLE PROJECTION

DRAWING CLASSIFICATION UNCLASSIFIED

TITLE
WASTE IBC SKID ASSEMBLY

SIZE E | DRAWING NUMBER P2R - WTS-11001 | ISSUE A

CAGE 14214 | SCALE NTS | SHEET 1 OF 1

STATUS RELEASED

REVISIONS						
ISSUED BY	REV	DESCRIPTION	DATE	CAD	CHKR	APPVD
SNL\CA	A	INITIAL RELEASE	05/30/2014	GAB	LMC	JED

NOTES:

1. DIMENSIONING AND TOLERANCING PER ASME Y14.5, 1994.
2. ALL DIMENSIONS ARE IN INCHES AND ARE APPROXIMATE.
3. MATERIAL: SEE BOM.

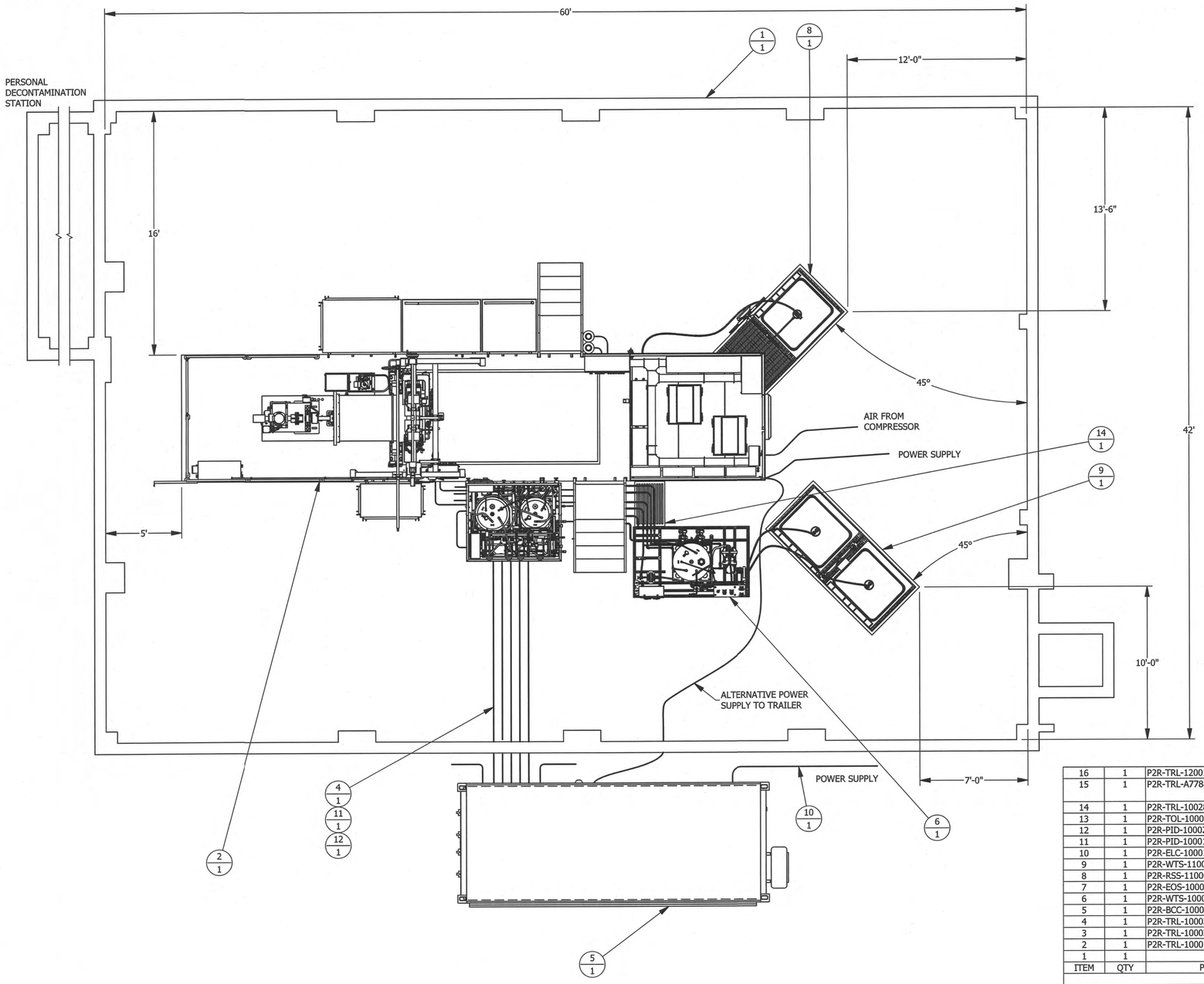

ITEM	QTY	PART NUMBER	DESCRIPTION	VENDOR
16	1	P2R-TRL-12001	SYSTEM LABELS (NOT SHOWN)	
15	1	P2R-TRL-A77889	FRONT AND REAR LOADING TABLES PHYSICAL CONFIGURATION (NOT SHOWN)	
14	1	P2R-TRL-10028	WORKING PLATFORM ASSEMBLY	
13	1	P2R-TOL-10001	TOOL SET (NOT SHOWN)	
12	1	P2R-PID-10002	PIPING AND INSTRUMENT DIAGRAM	
11	1	P2R-PID-10001	PROCESS FLOW DIAGRAM	
10	1	P2R-ELC-10001	ONE-LINE ELECTRICAL DIAGRAM	
9	1	P2R-WTS-11001	WASTE IBC SKID ASSEMBLY	
8	1	P2R-RSS-11000	REAGENT IBC SKID ASSEMBLY	
7	1	P2R-EOS-10000	EXPLOSIVE OPENING SUBSYSTEM ASSEMBLY (NOT SHOWN)	
6	1	P2R-WTS-10001	INTERMEDIATE TANK SKID ASSEMBLY	
5	1	P2R-BCC-10001	P2R BCC ASSEMBLY	
4	1	P2R-TRL-10003	SITE FLUID ROUTING	
3	1	P2R-TRL-10002	SHIPPING CONFIGURATION (NOT SHOWN)	
2	1	P2R-TRL-10001	P2R TRAILER ASSEMBLY	
1	1		ENVIRONMENTAL ENCLOSURE	

Parts List

COLORADO REGISTERED RONALD WAYNE DIDLAKE 32858 PROFESSIONAL ENGINEER 6/18/14

DEPARTMENT OF THE ARMY
RECOVERED CHEMICAL MATERIEL DIRECTORATE
E4585 HOADLEY ROAD
ABERDEEN PROVING GROUND, MD 21010-5424

EXPLOSIVE DESTRUCTION SYSTEM
P2R SYSTEM

ORIGINAL ISSUE APPROVALS		DATES
DESIGNED BY:	G. BELLUOMINI	
DRAWN BY:	G. BELLUOMINI	5/30/2014
CHECKED BY:	L. CLEMON	5/30/2014
APPROVED BY:	J. DIDLAKE	5/30/2014

MODEL AND DRAWING IDENTIFICATION INFORMATION
DRAWING: P2R-TLA-10001.idw
MODEL: P2R-TLA-10001.iam

NEXT ASSEMBLY	USED ON
APPLICATION	

SANDIA NATIONAL LABORATORIES
P.O. BOX 969
LIVERMORE, CA 94550-0969

ORIGIN INVENTOR 2014

ENGLISH

THIRD ANGLE PROJECTION

TITLE: P2R SITE LAYOUT

PART CLASSIFICATION: UNCLASSIFIED

DRAWING CLASSIFICATION: UNCLASSIFIED

SIZE: E | DRAWING NUMBER: P2R - TLA-10001 | ISSUE: A

CAGE 14214 | SCALE NTS | SHEET 1 OF 1

STATUS RELEASED

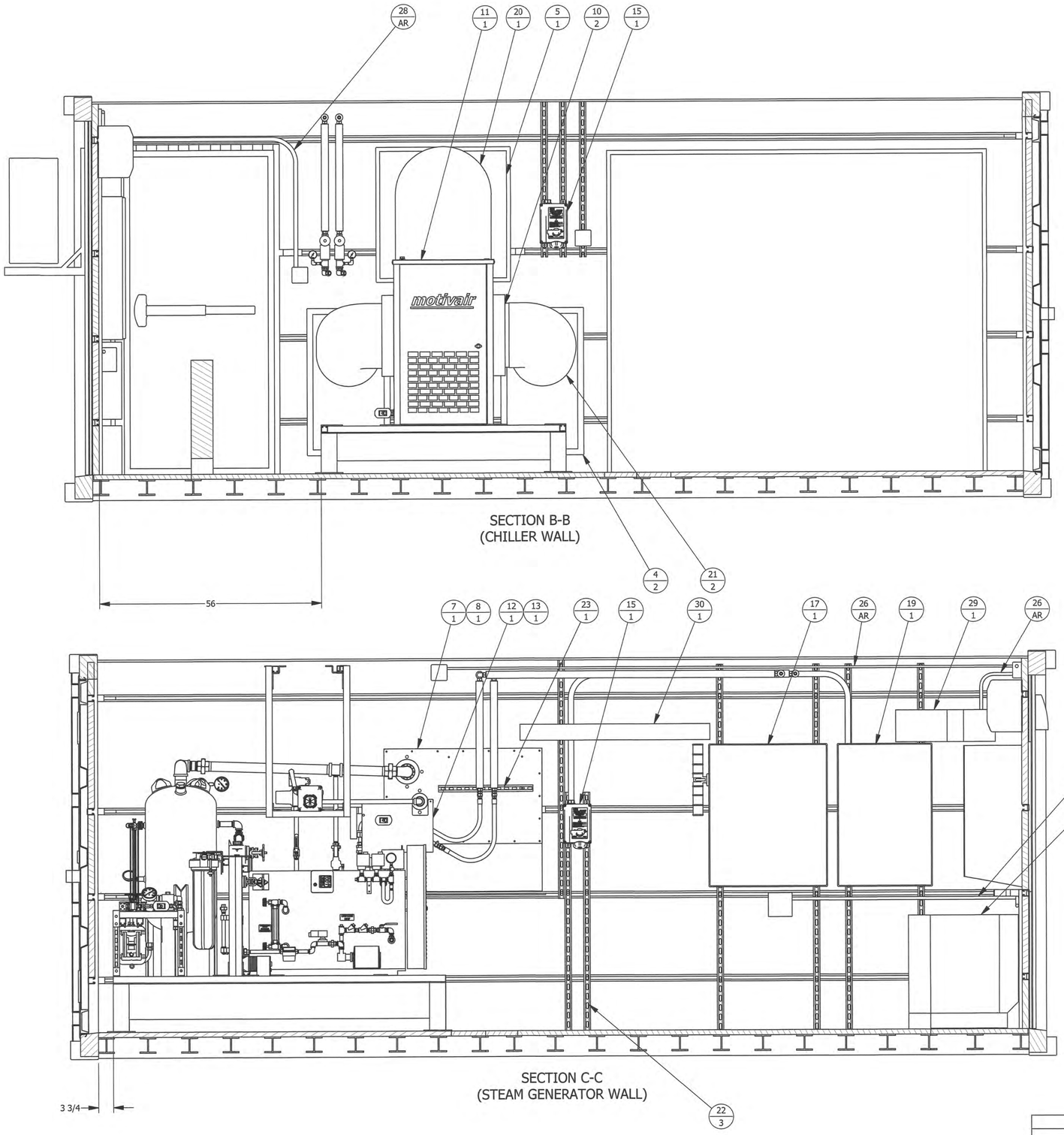

SECTION B-B
(CHILLER WALL)

SECTION C-C
(STEAM GENERATOR WALL)

COLORADO REGISTERED DONALD WAYNE JONES 32358 PROFESSIONAL ENGINEER

6/18/14

		TITLE	
		P2R BCC ASSEMBLY	
NEXT ASSEMBLY	USED ON	SIZE E	DRAWING NUMBER P2R - BCC-10001	ISSUE A
APPLICATION			
DRAWING: P2R-BCC-10001.idw		CAGE 14214	SCALE 1/10	Sheet 3 of 4
Model: P2R-BCC-10001.iam		STATUS: RELEASED	

NOTES:

1. DIMENSIONING AND TOLERANCING PER ASME Y14.5, 1994.
2. MATERIAL: SEE BOM.

REVISIONS						
ISSUED BY	REV	DESCRIPTION	DATE	CAD	CHKR	APPVD
SNL\CA	A	INITIAL RELEASE	5/31/2014	JMW	LMC	JED

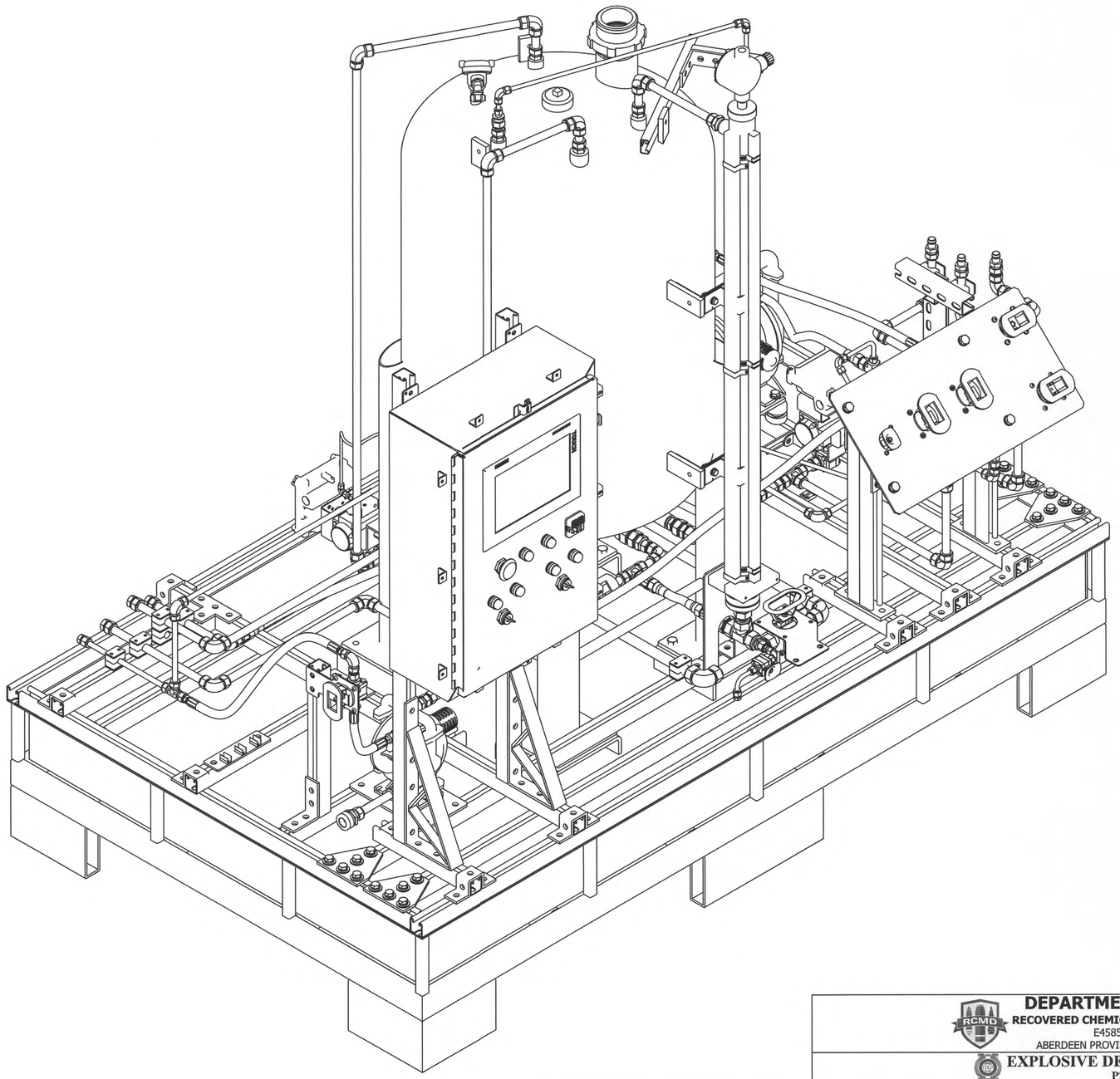

COLORADO REGISTERED PROFESSIONAL ENGINEER 32358 4/18/14

ORIGINAL ISSUE APPROVALS	DATES
DESIGNED BY: J. WASS	
DRAWN BY: J. WASS	5/8/2014
CHECKED BY: L. CLEMON	5/31/2014
APPROVED BY: J. DIDLAKE	5/31/2014

MODEL AND DRAWING IDENTIFICATION INFORMATION	NEXT ASSEMBLY	USED ON
DRAWING: P2R-WTS-10001.idw	P2R-TLA-10001	P2R
MODEL: Tank-Skid-WTS-P2R-10001.iam	APPLICATION	

DEPARTMENT OF THE ARMY
RECOVERED CHEMICAL MATERIEL DIRECTORATE
E4585 HOADLEY ROAD
ABERDEEN PROVING GROUND, MD 21010-5424

EXPLOSIVE DESTRUCTION SYSTEM
P2R SYSTEM

SANDIA NATIONAL LABORATORIES
P.O. BOX 969
LIVERMORE, CA 94550-0969

TITLE: INTERMEDIATE TANK SKID

ORIGIN: INVENTOR 2014

ENGLISH	PART CLASSIFICATION: UNCLASSIFIED	SIZE: E	DRAWING NUMBER: P2R - WTS-10001	ISSUE: A
THIRD ANGLE PROJECTION	DRAWING CLASSIFICATION: UNCLASSIFIED	CAGE: 14214	SCALE: NTS	SHEET 1 OF 7
		STATUS: RELEASED		