Baffling Factor Guidance Manual
Determining Disinfection Capability and Baffling Factors for Various Types of Tanks at Small Public Water Systems

Colorado Department of Public Health and Environment
Water Quality Control Division
Safe Drinking Water Program

Version 1.0
March, 2014

Colorado Department of Public Health and Environment

Executive Summary:

This guidance document represents the culmination of a multi-year joint project between the Colorado Department of Public Health and Environment's Water Quality Control Division (the Department) and the Colorado State University's (CSU) Department of Civil and Environmental Engineering. The document is meant to provide technical assistance to small public water systems with regard to disinfection, disinfection efficacy, and maximizing their ability to achieve and comply with disinfection as required by regulations. This guidance document presents a number of pre-engineered small-scale tanks (less than 5,000 gallons and operating at up to 50 gallons per minute (GPM)) and tank/pipe configurations that can be used for chemical disinfection as part of a drinking water treatment system. All of the pre-engineered systems and system modifications have undergone extensive research and testing at the Engineering Research Center at the Colorado State University. Specifically, this research study investigated disinfection through pipe segments, pressurized storage tanks, non-pressurized plastic storage tanks, and non-pressurized rectangular concrete tanks. Additionally, this research investigated inlet manifolds and random packing material as potential modifications to new or existing disinfection tanks. In essence, this guidance manual outlines the expected baffling factor (BF) at a range operational flow rates for these pre-engineered systems and modifications. The work presented in this document was initiated by the Department with the intention that small drinking water systems will be able to utilize the results that are presented in this guidance document by installing one of the pre-engineered small-scale tanks and/or implementing the recommended modifications to their existing infrastructure in order to comply with treatment requirements. The table below presents a summary of the pre-engineered systems and modifications presented in this document.

Summary of pre-engineered systems and modifications presented in this Guidance Document

Section Number	System/Modification Type	Range of BF	Flow Rates (GPM)
2	Pipelines and Pipe Segments	0.6-1.0	≥ 5
3	Pressurized Retention Tanks	0.1-0.5	5-30
4	Open Surface Concrete Tanks	0.1-0.5	≥20
5	Non-pressurized Plastic Tanks	0.1-0.2	<50
6	Inlet Manifolds*	0.1-0.5	<50
7	Packing Material*	0.1-0.6	<50

* *Sections 6 and 7 are modifications that can be used to increase the baffling factors of the disinfection tanks discussed in Section 5.*

Acknowledgements

The Colorado Department of Public Health and Environment gratefully acknowledges the individual contributions of the following:

- Professor Karan Venayagamoorthy of the Department of Civil and Environmental Engineering, Colorado State University.
- Master's Candidates working under Professor Venayagamoorthy that contributed in the completion of this work:
    - Ping Xu
    - Jordan Wilson
    - Taylor Barnett
    - Zachary Taylor
    - Justin Kattnig
- Town of Jamestown, Colorado
- Tres Valles West Water System

Contents

1 INTRODUCTION 6
1.1 PURPOSE OF THE THIS GUIDANCE MANUAL 6
1.2 WHAT ARE BAFFLING FACTORS – HOW ARE THEY MEASURED OR ASSIGNED? 7
1.3 CT AND LOG INACTIVATION 9
1.4 RESEARCH PERFORMED BY COLORADO STATE UNIVERSITY 10
1.5 LOCATION OF RESULTS OF MODELING AND BAFFLING FACTOR TRACER TESTING 11
2 BAFFLING FACTORS FOR PIPELINES AND PIPE SEGMENTS 13
2.1 BAFFLING FACTORS AWARDED FOR PIPELINES AND PIPE SEGMENTS 14
2.2 CONSTRAINTS FOR PIPELINES AND PIPE SEGMENT SYSTEMS 14
2.3 SYSTEMS DESIGNED OUTSIDE THE CONSTRAINTS 14
2.4 EXAMPLE: PIPE LOOP CONTACTOR CALCULATION 15
3 BAFFLING FACTORS FOR PRESSURIZED RETENTION TANK SYSTEMS 17
3.1 BAFFLING FACTORS AWARDED FOR PRESSURE TANKS PLUMBED IN SERIES 18
3.2 CONSTRAINTS FOR PRESSURE TANK SYSTEMS 18
3.3 SYSTEMS DESIGNED OUTSIDE THE CONSTRAINTS 18
3.4 EXAMPLE: PRESSURE TANK CONTACTOR CALCULATION 20
4 BAFFLING FACTORS FOR OPEN SURFACE CONCRETE TANKS 21
4.1 BAFFLING FACTORS AWARDED FOR OPEN SURFACE CONCRETE TANKS 23
4.2 CONSTRAINTS OF OPEN SURFACE CONCRETE TANK SYSTEMS 24
4.3 SYSTEMS DESIGNED OUTSIDE OF THE CONSTRAINTS 24
4.4 EXAMPLE: OPEN TANK CONTACTOR CALCULATION 26
5 BAFFLING FACTORS FOR NON-PRESSURIZED NON-CONCRETE (PLASTIC) TANKS 28
5.1 BAFFLING FACTORS AWARDED FOR NON-PRESSURIZED TANK SYSTEMS 28
5.2 CONSTRAINTS FOR NON-PRESSURIZED PLASTIC TANK SYSTEMS 29
5.3 SYSTEMS DESIGNED OUTSIDE THE CONSTRAINTS 29
5.4 EXAMPLE: OPEN TANK CALCULATION 30
6 BAFFLING FACTORS FOR INLET MANIFOLDS 31
6.1 BAFFLING FACTORS AWARDED FOR MANIFOLDS 32
6.2 CONSTRAINTS FOR MANIFOLD SYSTEMS 33
6.3 SYSTEMS DESIGNED OUTSIDE THE CONSTRAINTS 34
6.4 EXAMPLE: INLET MANIFOLD CALCULATION 34
7 BAFFLING FACTORS WITH TANK PACKING MATERIAL 36
7.1 BAFFLING FACTORS AWARDED FOR PACKING MATERIAL 36
7.2 CONSTRAINTS FOR PACKING MATERIAL 38
7.3 SYSTEMS DESIGNED OUTSIDE THE CONSTRAINTS 38
7.4 EXAMPLE: TANK PACKING MATERIAL 39
ORIGINAL BF 40
APPENDICES 41
APPENDIX A – LOG INACTIVATION CALCULATIONS 41
APPENDIX B PHASE 2 REPORT 42
APPENDIX C EVALUATION OF FLOW AND SCALAR TRANSPORT 43

APPENDIX D PIPE LOOP CFD MODELS 44
D.1 HOW TO CALCULATE MINIMUM FLOW VELOCITIES 44
D.2 PIPE LOOP CONTACTOR LAMINAR/TURBULENT CFD STUDY 44
BF* 45
D.3 PIPE LOOP CONTACTOR L/D CFD STUDY 46
APPENDIX E OPEN SURFACE CONCRETE TANKS 48
E.1 TANK GEOMETRY 48
E.2 CFD MODELING 49
E.3 PHYSICAL TRACER METHODOLOGY AND CFD VALIDATION 50
E.4 CFD DISCUSSION 53
E.5 INLET BOX STUDY 55
E.6 TURN BOX STUDY 59
APPENDIX F FLOW DYNAMICS AND SCALAR TRANSPORT 62
APPENDIX G – TOWARDS IMPROVED UNDERSTANDING AND OPTIMIZATION OF INTERNAL HYDRAULICS 63
APPENDIX H RANDOM PACKING MATERIAL 64
H.1: IMPROVING DRINKING CONTACT TANK HYDRAULICS USING RANDOM PACKING MATERIAL 64
H.2: FORMULA FOR DETERMINING EFFECTIVE TANK VOLUME 64
APPENDIX I TRACER STUDIES 65

Baffling Factor Guidance Manual

Determining Disinfection Capability and Baffling Factors for Various Types of Tanks at Small Public Water Systems

1 INTRODUCTION

The *Colorado Primary Drinking Water Regulations* (CPDWR) requires all public water systems to provide potable drinking water to all consumers at all times. One provision of the CPDWRs requires that public water systems provide chemical disinfection of water. In the United States, chlorination is the most common method of disinfecting drinking water. The United States Environmental Protection Agency (USEPA) document titled *LT1ESWTR Disinfection Profiling and Benchmarking Technical Guidance Manual* (LT1ESWTR Guidance Manual) provides guidelines for the inactivation of waterborne pathogens during disinfection in terms of "CT" which is the product of the outlet disinfectant residual concentration "C" and a characteristic contact time "T" (also referred to as T_{10}) between the disinfectant and the water. The effective contact time is usually taken to be T as opposed to the theoretical (average) detention time "TDT". T is the time required for the first ten percent of a pulse of tracer (disinfectant) to travel through the disinfection segment to the residual sampling point (usually the outlet) and TDT is the ratio of the storage volume "V" of the disinfection segment to the peak hourly flow rate "Q". Baffling is used in many contact tanks (disinfection segments) to increase the contact time of the disinfectant with the water. USEPA provides guidelines developed from tracer studies for determining baffling factors based on baffling description. The baffling factor is taken as the ratio of T/TDT. However, the contact basin baffling factor as specified in LT1ESWTR Guidance Manual is a potentially imprecise factor in the log inactivation calculation. Furthermore, the baffling conditions described in the LT1ESWTR Guidance Manual have limited applicability for the contact tank configurations utilized by many small public water systems in Colorado. For example, the baffling factors prescribed in LT1ESWTR Guidance Manual do not address multiple tanks in series (and/or parallel), the impact of inlet/outlet piping configurations, short pipeline segments, transitions to laminar flow conditions under low flow rates etc., especially for small drinking water systems. Hence, there is a critical need to increase the knowledge base on the hydraulic disinfection efficiency of small contact tanks with the explicit goal to provide technical guidance to operators of small public water systems to ensure compliance with disinfection rules.

1.1Purpose of the this Guidance Manual

The overarching purpose of this Guidance Manual is to provide design guidelines for effective disinfection in small public drinking water systems. Small systems are faced with similar regulatory requirements while having less technical, managerial, and financial capacity than their larger counterparts. In particular, this manual aims to provide guidance on how to efficiently increase the disinfection contact time in a cost effective manner, using tanks and components

readily available from major water industry parts distributors, to ensure compliance with surface water treatment and ground water rules stipulated in CPDWR. To this end, the multi-year joint project between the Colorado Department of Public Health and Environment's Water Quality Control Division (the Department) and the Colorado State University's (CSU) Department of Civil and Environmental Engineering focused on developing several cost effective pre-engineered tank configurations applicable for use by small drinking water systems. This Guidance Manual is the culmination of this effort between the Department and CSU and it provides guidance on how to calculate detention times, appropriate baffling factors, and how to assign disinfection credit for the pre-engineered systems that were studied at CSU. The following systems were studied:

- pipe segments,
- pressurized tank systems,
- non-pressurized storage tank systems,
- rectangular tanks with serpentine baffles

The Guidance Manual also covers cost effective recommendations that are designed to increase the baffling factor of small contact tanks. In this guidance document, a contact system (or more precisely a disinfection segment) is any tank or pipe system used to achieve contact time between a disinfectant and raw water (incoming supply). Additionally, this Guidance Manual provides guidance on several types of system modifications that can be used to increase the baffling factor of both new and existing small systems.

All of the pre-engineered systems and system modifications have undergone extensive physical testing as well as computational flow modeling. As such, this Guidance Manual outlines the expected baffling factor and operational flow rates for these pre-engineered systems and modifications. At the end of each subsequent section (Sections 2 through 7), an example on how to calculate the contact time to determine the log inactivation of the studied disinfection system is provided.

1.2 What are Baffling Factors – how are they measured or assigned?

The baffling factor "BF" of a contact tank is used to adjust the theoretical detention time to a more realistic value of the "CT" of the system which has been defined earlier. A reliable and accurate method to determine the BF of a disinfection system is through the use of a tracer study. During a tracer study, a tracer chemical is injected into the influent. This injection point should be as close as possible to the disinfectant injection port. The water containing the tracer chemical travels through the contact volume, then the concentration of this tracer is monitored at the outlet over time. A resident time distribution (RTD) curve is then generated by plotting the concentration of tracer at the chlorine contact system outlet as a function of time. Figure 1 shows an example of a RTD curve of a step dose tracer input for a hypothetical contact system. This RTD curve would be associated with a moderately efficient disinfection segment and would have

a BF (=T/TDT) of 0.5, indicating that the flow short circuits through the disinfection segment. In contrast, the plug flow line shown in Figure 1 depicts the case when all of the tracer material sent through the disinfection segment reaches the outlet at the theoretical detention time (TDT) of the segment. For a detailed discussion on tracer studies please refer to Section 2.6 in the "Phase 2 Final Report" provided in Appendix B and the tracer studies protocol prepared by the Department that is provided in Appendix I.

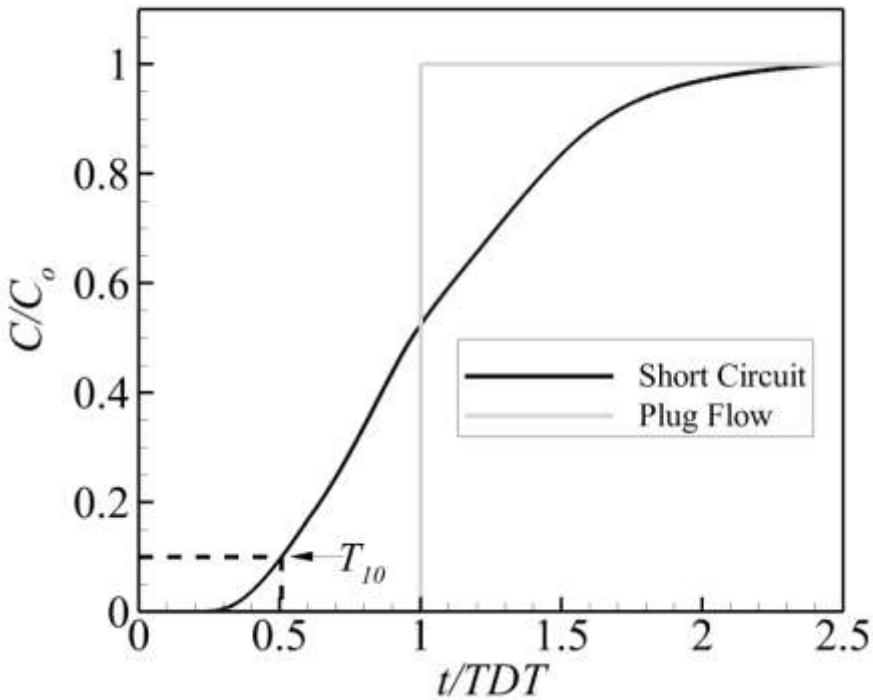

Figure 1: Example of a Residence Time Distribution (RTD) Curve at the outlet of a hypothetical disinfection segment with the tracer injected as a step dose. Note time T has been normalized by TDT.

Alternatively, the United States Environmental Protection Agency (USEPA) suggests that the BF of a system can be estimated using Table 2. Please note that Table 2 is from Section 4 of the USEPA document entitled *LT1ESWTR Disinfection Profiling and Benchmarking Technical Guidance Manual* (LT1ESWTR Guidance Manual). However, tracer studies and computational flow modeling studies performed at CSU as part of this research project on full-scale systems ranging in volume from 25 gallons to 1500 gallons (please refer to sections 2 through 5 and the related appendices therein for more details) indicate that the baffling factors listed in Table 2 are not necessarily applicable to small systems, and often over predict the baffling factors for both small and large systems. Hence, Table 2 must not be used as a justification for claiming credit for baffling factors unless applied in a conservative manner or with the support of a tracer study.

Therefore, this current Guidance Manual expands on and clarifies the baffling factors listed in Table 1 in order to ensure that appropriate baffling factors are assigned.

Table 1: Baffling Factors

Baffling Condition	Baffling factor	Baffling Description
Unbaffled (mixed flow)	0.1	None, agitated basin, very low length to width ratio, high inlet and outlet velocities
Poor	0.3	Single or multiple unbaffled inlets and outlets, no intra-basin baffles
Average	0.5	Baffled inlet or outlet with some intra-basin baffles
Superior	0.7	Perforated inlet baffle, serpentine or perforated intra-basin baffles, outlet weir or perforated launders
Perfect (plug flow)	1.0	Very high length to width ratio (pipeline flow), perforated inlet, outlet, and intra-basin baffles

1.3 CT and Log Inactivation

The effectiveness of a disinfection process can be measured using log inactivation. The log inactivation is an estimation of the efficacy of disinfection as measured by percent of microorganisms that have been either killed or rendered unable to replicate during the disinfection process. A system that achieves 1-log inactivation is rendering inactive 90% of the target pathogen. Similarly a 3-log system would inactivate 99.9% of these microorganisms. The effectiveness of the disinfection process, and effectively the log inactivation, is determined by the disinfectant utilized, disinfectant concentration during exposure, temperature, and pH, as outlined in LT1ESWTR Guidance Manual.

In processes where chemical disinfection is utilized, disinfection efficacy is measured by the amount of time the disinfectant is in contact with the water and the overall concentration of the disinfectant in the water. This is quantitatively defined using a “CT” value in order to determine the log inactivation of a disinfection process. Typically, water treatment plant operators must be concerned with both residual concentration at the end of a disinfection process “C” measured in mg/L and the amount of time that the disinfectant was in contact with the water “T” measured in minutes. The residual disinfectant concentration, C, is determined by obtaining a representative water sample from the process after disinfection is completed (e.g. after a clearwell or after a storage tank used for disinfection). The disinfection contact time, T can be calculated using the

volume, "V" of the disinfection segment (e.g. a contact tank), peak hourly flow rate "Q", and the baffling factor "BF". The volume of the disinfection segment should be the lowest volume that occurs when the treatment system is operational, while the peak hourly flow rate should be the highest hourly flow rate that occurs during operation. For equations to calculate the volume of various shapes please refer to Table 2. The theoretical detention time "TDT" is the contact time of the system if it had perfect plug flow and is calculated using Equation 1. Plug flow occurs when the water flows through a contactor such that all water remains within the vessel exactly the TDT and no short-circuiting occurs. BF is used to adjust the TDT so that it reflects the actual flow conditions within the tank. A tank with a BF of 0.1 would have a high amount of short-circuiting, dead zones, and recirculation, while a system with a BF of 1.0 indicates ideal plug flow conditions. Equation 2 shows how the contact time T is calculated from the TDT and the BF.

$$\mathrm{TDT} = \mathrm{V}/\mathrm{Q} \qquad (1)$$
$$\mathrm{T} = \mathrm{TDT} \times \mathrm{BF} \qquad (2)$$

For more information on how CT is calculated, including a step-by-step example, please see Appendix A. This appendix contains the Department's brochure, which provides additional details on calculating log inactivation.

Table 2: Volume Equations for Shapes

Shape	Example of unit with this shape	Volume equation
Pipe	Raw Water Pipe, Plant Piping, Finished Water Pipe, Pipe Loop Contactor	Length × Cross-sectional Area (πr^2)
Rectangular Basin	Rapid Mix, Flocculation, and Sedimentation Basin, Clearwells	Length × Width × Minimum Water Depth
Cylindrical Basin	Rapid Mix, Flocculation, and Sedimentation Basin, Clearwells	Minimum Water Depth × Cross-sectional Area (πr^2)

1.4 Research Performed by Colorado State University

The research conducted at Colorado State University (CSU) examined several different types of disinfection contact systems. This research was performed over a five-year period, during which the hydraulics and baffling factors of a number of pre-engineered tanks were determined through a multi-pronged approach that involved a combination of computational modeling, experimental studies, and analysis. Specifically, these studies utilized computational fluid dynamic (CFD) models and physical tracer experiments. For more information on how to conduct tracer studies

please see Appendix I. Both purpose built laboratory systems and existing water treatment plants were tested using physical tracer studies.

Specifically the types of systems tested included:

- Pipe Segments
- Pressurized Tank Systems
- Non-Pressurized (NP) Plastic Tank Systems
- Concrete Tank Systems

In addition to the systems tested, several types of tank modifications were also tested. These tank modifications included:

- Inlet Manifolds
- Random Packing Material

In what follows in this Guidance Document, each of the above systems and modifications are discussed in Sections 2 through 7. Each of these sections provides an overview of the studied system followed by the appropriate baffling factors, constraints and an example calculation of the contact time. Please note that the material presented in these sections is the culmination of a five year research effort that involved extensive laboratory and field experiments as well as CFD simulations. Therefore, each section will refer the reader to the appropriate appendix to justify the assumptions and data that back up the assigned baffling factors.

1.5 Location of Results of Modeling and Baffling Factor Tracer Testing

For more detailed information of all of the studies conducted, please refer to:

- APPENDIX A: Disinfection: CT and Microbial Log Inactivation Calculations. This appendix contains a brochure published by the Department that details the procedure on how to calculate CT.
- APPENDIX B: Phase 2 Final Report. This document contains the Phase 1 literature review on small water systems, water treatment research, tracer studies, and computational fluid dynamics (CFD) methods. It also contains the Phase 2 research performed which involved experimental and computational modeling studies on a pipe loop contactor, pressurized storage tanks, and non-pressurized plastic tanks. Finally, the report presents the Phase 3 disinfection analysis of these pre-engineered systems.
- APPENDIX C: Evaluation of Flow and Scalar Transport Characteristics of Small Public Drinking Water Disinfection Systems Using Computational Fluid Dynamics. This appendix contains a Master of Science thesis that presents findings from CFD modeling and tracer studies conducted on pipe loop contactors, baffled serpentine tanks, non-pressurized plastic storage tanks, and pressurized storage tanks.

- APPENDIX D: Pipe Loop CFD Models. This appendix contains the results of a CFD modeling study that aims to highlight the differences in baffling factor for laminar and turbulent flow in pipe loops as well as the minimum pipe length to diameter ratios required in pipe loop contactors to achieve near plug flow conditions.
- APPENDIX E: Open Surface Concrete Tanks. This appendix contains the results of physical tracer studies that investigated how to improve the baffling factor of concrete tanks using baffles and random packing material.
- APPENDIX F: Flow Dynamics and Scalar Transport in Drinking Water Contact Tanks. This appendix contains a Master of Science thesis presents the results of CFD modeling and tracer studies conducted on serpentine baffle tanks, non-pressurized plastic storage tanks, inlet modifications, and use of random packing material, as well as a case study of an operational disinfection segment.
- APPENDIX G: Towards Improved Understanding and Optimization of the Internal Hydraulics of Chlorine Contact Tanks. This appendix contains a Master of Science thesis presents results of CFD modeling and tracer studies conducted on serpentine baffle tanks and inlet manifolds.
- APPENDIX H: Improving Drinking Contact Tank Hydraulics using Random Packing Material. This appendix refers to a peer-reviewed journal article that is forthcoming in February 2014 in the Journal of American Water Works Association (AWWA). It presents results from tracer studies of vertical cylindrical tanks that are packed with random packing material to improve the baffling factor.
- APPENDIX I: Tracer Study standard operating procedure (SOP). This appendix prepared by the Department outlines how to conduct a tracer study and shows the results of 2 tracer studies conducted by CSU.

These documents are included as part of this document or attached via hyperlinks in the appendices with the exception of Appendix H. Appendix H is available for purchase from the Journal of the American Water Works Association.

2 Baffling Factors for Pipelines and Pipe Segments

Pipelines and pipe segments are amongst the most hydraulically efficient water contact systems. Near plug flow may be achieved within these systems due to high pipe length to pipe diameter ratios found within pipes. Pipe segments can be credited with a BF up to 1.0. If a straight run of pipe is not possible, Figure 2 shows an example of a pipe loop system comprised of several sections of pipe. The geometry of pipe loop contactors can vary greatly therefore this section presents some very important constraints for assigning baffling factors.

For more information on disinfection through pipe segments, as well as detailed information about the study used to develop these guidelines, please refer to the document found in Appendices C and D. The specific information on pipe segments referred to in this document can be found in Appendix C (Section 3.2.1 and Section 4.3.1 of the document entitled "Evaluation of Flow and Scalar Transport Characteristics of Small Public Drinking Water Disinfection Systems Using Computational Fluid Dynamics"). Additional information on differences in baffling factor between laminar and turbulent flow as well as the minimum pipe length to diameter ratios required in pipes to achieve near plug flow conditions can be found in Appendix D.

(A) Fort Collins Pipe Loop Contactor

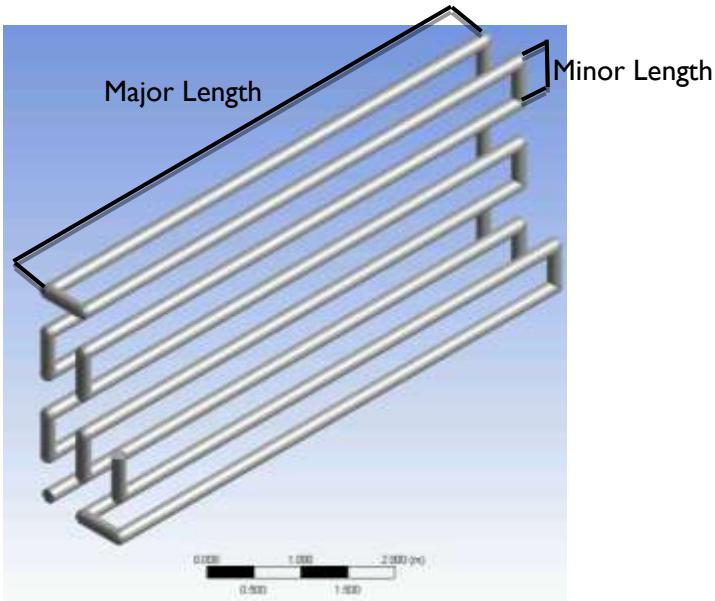

(B) CFD model of Pipe Loop Contactor

Figure 2: Example of a Pipe Loop

2.1 Baffling Factors Awarded For Pipelines and Pipe Segments

Pipelines and pipe segments that have a total length (L) to pipe diameter (D) ratio (L/D) of greater than or equal to 160 and meet flow restrictions below will be awarded a BF of 1.0. Table shows the design constraints for straight run pipe segments. A pipe segment can be awarded a BF of 1.0 if the pipe continues uninterrupted (i.e. there are no changes in pipe diameter or presence of pipe bends such as elbows or 45 degree fittings) for the minimum distance listed in Table 3. Pipe loops may also receive a BF of 1.0, however additional constraints apply.

Table 3: Pipe Segment Requirements for Common Pipe Diameters

Nominal Pipe Diameter (inch)	Minimum Main Run Length (feet)	Minimum Flow Rate (GPM)
4	54	5
6	80	8
8	107	10
10	134	12.5
12	160	15

2.2 Constraints for Pipelines and Pipe Segment Systems

- To develop turbulent flow and be awarded a BF of 1.0, flow rate must be above the minimums listed in Table 3; there is no maximum operating flow rate except as limited by the required contact time.
- The pipe must maintain a constant diameter throughout (i.e. there may be no expansions or contractions).
- System must have a total L/D ratio ≥160.

Additional Constraints for Pipe loops

- Pipe loop segments must at least have an L/D ≥ 40 for each section prior to any bends (See Appendix D.3 for justification).
    - Example: A pipe loop with four main runs each with a minimum L/D = 40 is acceptable (See Appendix D.3 for justification).

2.3 Systems Designed Outside the Constraints

If a system is unable to maintain the minimum operational flow rates then the system will only receive a BF of 0.6. This reduction in the BF is caused by the flow within the pipes transitioning from turbulent to laminar. For justification of this reduction in BF please refer to Appendix D.2.

For piped systems with an L/D <160 but with an L/D ≥ 40 overall, a BF of 0.7 will be assigned provided the flow conditions are turbulent as stipulated in Appendix D.1 (i.e., Reynolds Number of the flow must be greater than 4000). Any system that does not have an L/D ≥160 must conduct a tracer study or otherwise justify the appropriate BF. For pipe loops with multiple disinfection segments, a tracer study may be necessary or more conservative baffling factor assigned if the individual runs of a pipe loop do not have an L/D ratio ≥ 40.

If a larger pipe diameter is to be used than those listed in Table 3, please refer to Appendix D.1 on how to determine minimum flow rates.

If the system does not have a constant pipe diameter, a tracer study will be needed to determine the actual BF of the system. A tracer study is required because the sudden expansion/contraction caused by a change in pipe diameter induces non-plug flow phenomena within these transitional sections.

2.4 Example: Pipe Loop Contactor Calculation

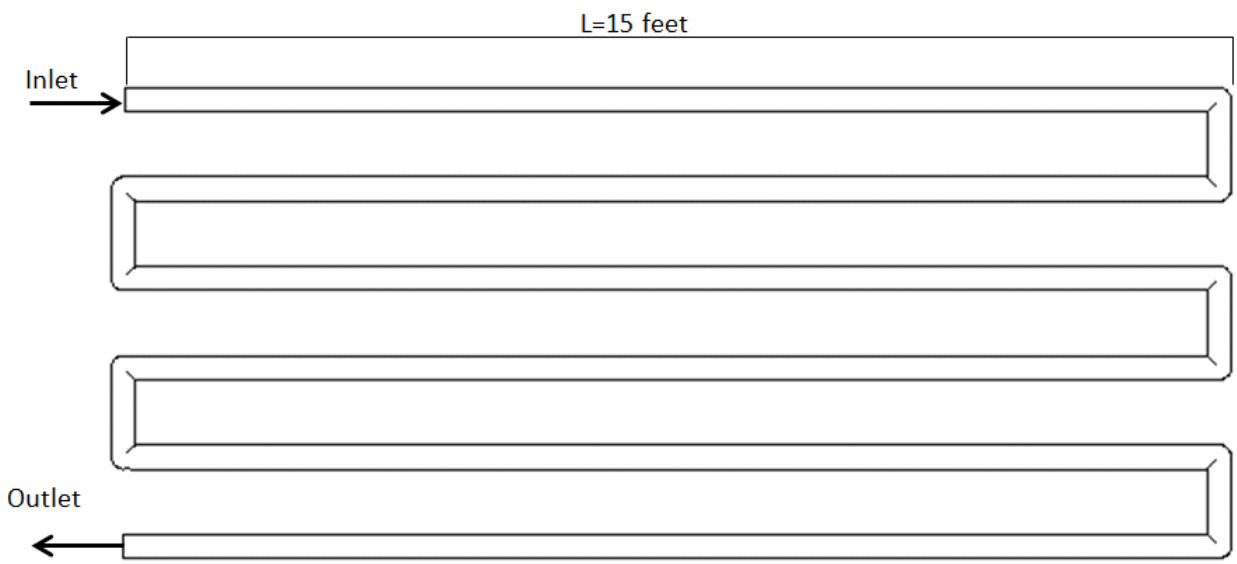

Figure 3: Pipe Loop Contactor Geometry used in Example

Pipe Diameter (D)	4 inches 0.333 feet
Pipe Radius (r)	2 inches 0.167 feet
Main Run Length (L_{run})	15 feet
Number of Main Runs	6
System Flow Rate (Q)	25 GPM

From Table 3, the volume of the pipe loop contactor shown in Figure 3 is:

$$V = \#\text{ of main runs } \times \text{ length of main runs} \times \pi \times \text{radius}^2$$

$$V = 6 \times 15\text{ ft} \times 3.14 \times (0.167\text{ ft})^2 = 7.85\text{ ft}^3 \times 7.48\text{ gallon/ft}^3 = 58.7\text{ gallons}$$

$$\text{TDT} = \frac{58.7\text{ gallons}}{25\text{ GPM}} = 2.3\text{ minutes}$$

The total L/D of the system is then calculated by:

$$\text{Total L/D} = \#\text{ main runs} \times \frac{\text{length of runs (feet)}}{\text{diameter of pipe (feet)}}$$

$$\text{Total } \frac{L}{D} = 6 \times \frac{15\text{ ft}}{0.333\text{ ft}} = 272.7$$

The contact time (T) is then calculated by:

$$T = BF \times TDT$$

$$T = 1.0 \times 2.3 = 2.3\text{ minutes}$$

The system in this example would have a BF of 1.0 with a T of 2.3 minutes. This pipe loop would have a total L/D of 273. Since this is larger than the required minimum of 160 this system would receive the full BF credit of 1.0.

3 Baffling Factors for Pressurized Retention Tank Systems

Pressurized (hydro-pneumatic) tanks can be combined in series to create a cost effective and efficient drinking water disinfection contact system. These pressure tanks are available in sizes ranging from 14 gallons to over 100 gallons, and can handle up to 150 psi. Figure 4 shows the system tested which uses hydro-pneumatic tanks with a volume of 80 gallons (each) from Well Mate. Table 5 shows baffling factors for pressure tank systems that include up to 6 tanks plumbed in series. It should be noted that the direction of flow within the tanks (i.e. flow from top to bottom or bottom to top) will have no effect on the performance of the system.

For more information on pressure tank systems, as well as detailed information about the study used to develop these guidelines, please refer to the document in Appendix B, specifically Section 3.2 in "Phase 2 Final Report". Additional information can be found in the document in Appendix C, specifically Section 4.3.2 in "Evaluation of Flow and Scalar Transport Characteristics of Small Public Drinking Water Disinfection Systems Using Computational Fluid Dynamics".

Figure 4: Example of a Pressurized Tank System

3.1 Baffling Factors Awarded For Pressure Tanks Plumbed in Series

Table 4: BF Values for Pressurized Tanks Arranged in Series

Number of Tanks	Operational Flow Rates (GPM)	BF
1	5-20	0.1
2	5-20	0.2
3	5-20	0.3
4	10-30	0.4
5	10-30	0.5
6	10-30	0.55

***NOTE: Expect pressure losses of 35 psi or higher if more than 4 tanks are used in series ***

3.2 Constraints for Pressure Tank Systems

- Inlet and outlet must be located on either the top (top side) or bottom (bottom side) of the tank.All tanks must remain full to achieve the desired BF.
- Both inlet and outlet cannot be located on same end of tank (e.g. top/top or bottom/bottom), instead they must be located on opposite ends (e.g. top/bottom or bottom/top)
- Single inlet/outlet pressure tanks (e.g. bladder pressure tanks) will not receive any credit
- Orientation (vertical as tested or horizontal) of tank does not alter BF.
- Tanks must be plumbed in series if more than one will be used (i.e. the effluent of one tank must flow into the next tank).
- Total combined volume of all tanks in a series must not exceed 600 gallons. Any system with a combined volume over 600 gallons was not verified through testing or modelling and must conduct a tracer study or otherwise justify the appropriate BF.

3.3 Systems Designed Outside the Constraints

The flow rates stated in Table 4 are operational recommendations and not requirements. A system may operate outside of the recommended flow rates and will still receive the stated BF, but may experience other hydraulic operational limitations. The operating flow rates have been suggested based off of pressure loss tests performed at CSU (see Table 3.1 in the document in Appendix C, in "Evaluation of Flow and Scalar Transport Characteristics of Small Public Drinking Water Disinfection Systems using Computational Fluid Dynamics"). Systems that operate below the recommended flow rates should be warned that the pressure losses within the system could exceed the available pressure within the flow. If this condition occurs the system will cease to operate. If a system operates at flow rates higher than those listed, they should

expect very high-pressure drops across the contact system. These pressure losses occur through the entire system (e.g. piping, valves, tanks etc.) and numerous system modifications would be needed to mitigate the losses.

If tanks are configured (plumbed) in a manner where the inlet and outlets are plumbed into the sides of the tank and are not located at opposite ends of the tank, a maximum of 0.1 BF credit will be issued. Tracer studies may be used to determine an alternate BF of the system. This document will not automatically issue any higher credit to these systems due to the increased short-circuiting that would be caused by such inlet/outlet configurations. This increased short-circuiting would significantly reduce the BFs that were found in the CSU study.

If a system uses tanks where both the inlet and outlet are located on the same end of the tank (e.g. top/top or bottom/bottom), increased short-circuiting would be caused by these inlet/outlet locations which would significantly reduce the BFs found in the CSU study. The BF for such systems cannot be definitively identified without the use of a tracer study.

If a system uses a bladder pressure tank (or tanks that use a shared inlet/outlet), no credit will be issued. These tanks do not allow constant flow through the tank and are instead intended for maintaining constant pressure within the system.

3.4 Example: Pressure Tank Contactor Calculation

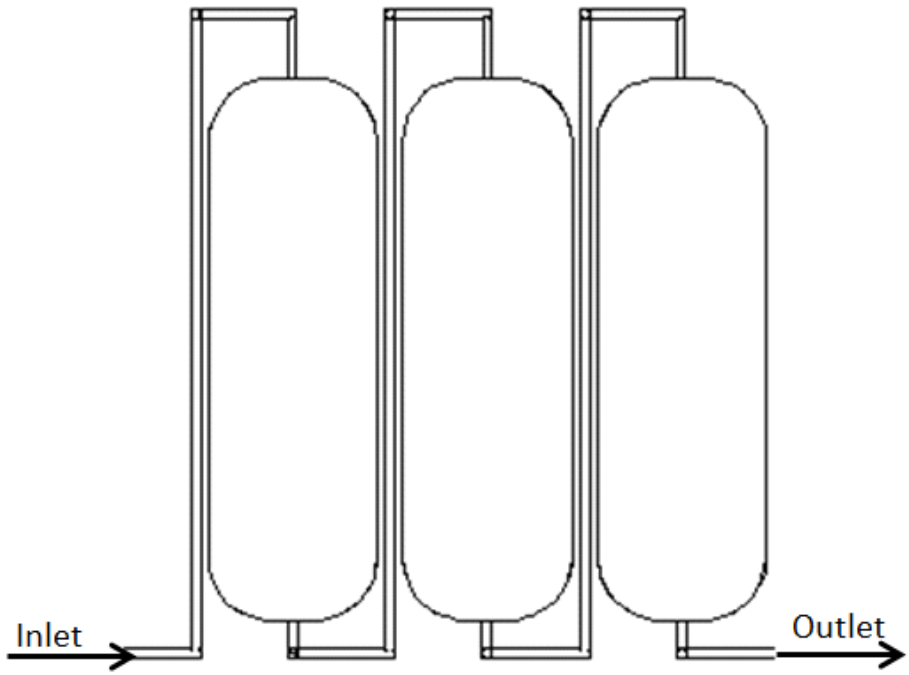

Figure 5: Pressure Tank System Used in Example

Number of Tanks	3
Tank Volume	80 gallons
Flow Rate	15 GPM

The volume of the system shown in Figure 5 will be:

$$V = \#\text{ of tanks } \times \text{tank volume}$$
$$V = 3 \times 80 \text{ gallons} = 240 \text{ gallons}$$
$$\text{TDT} = \frac{240 \text{ gallons}}{15 \text{ GPM}} = 16 \text{ minutes}$$

From Table 4 the *BF* of a 3-tank system will be 0.3. The contact time (T) is then calculated by:

$$T = \text{BF} \times \text{TDT}$$
$$T = 0.3 \times 16 = 4.8 \text{ minutes}$$

The system in this example would have a BF of 0.3 with a T of 4.8 minutes.

4 Baffling Factors for Open Surface Concrete Tanks

Open surface concrete tanks are commonly used as drinking water contactors when larger volumes are required. Since the scope of this guidance document focuses on small systems, the guidance provided in this section is only applicable to tanks up to 5,000 gallons in volume and 50 GPM in flow rate. Most existing tanks are rectangular in shape and have sharp circular inlets. In general, open systems with sharp inlets perform poorly if unmodified (BF= 0.1) because the use of a sharp inlet induces severe mixing and short-circuiting. An example of an open surface concrete tank can be seen in Figure 6.

The installation of baffles and the innovative application of random packing material can be used to increase the BF of these tanks (please refer to Section 7 "Baffling Factors with Tank Packing Material" and Figure 20). Random packing material can be used to modify an empty tank by placing a volume of baffling material over the tank inlet (see Figure 8 for an example). When a cage of baffling material is placed over the tank inlet, this is called an inlet box. A typical baffled inlet box system can be seen in Figure 8. Baffles are most effective when placed parallel to the long axis of the tank and when the baffle opening (L_{BO}) is the same size as the channel width (W_c) (see the document found in Appendix G, specifically Section 3.6 in "Towards Improved Understanding and Optimization of the Internal Hydraulics of Chlorine Contact Tanks". Random packing material can also be placed in an inlet box in coordination with baffle systems at turns (called turn boxes) in order to reduce flow separation and promote uniform velocity fields (See Figure 10 for an example). A combination of these methods can yield tanks with the highest contact efficiency (see Figures 10 and 11 for an example).

For more information on open surface concrete tanks see the document found in Appendix G, specifically Chapter 3 in "Towards Improved Understanding and Optimization of the Internal Hydraulics of Chlorine Contact Tanks" and/or the document found in Appendix F, specifically Chapter 3 in "Flow Dynamics and Scalar Transport in Drinking Water Contact Tanks". Additional information can be found in Appendix E.

Figure 6: Example of Open Surface Concrete Tank

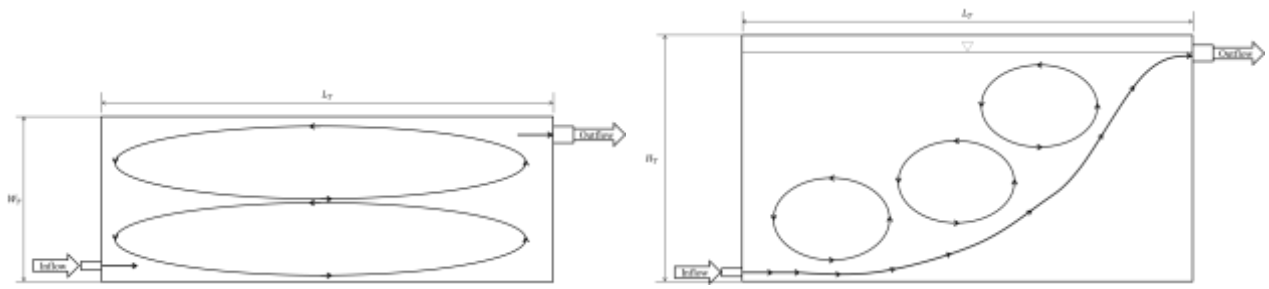

Plan View Section View

Figure 7: Un-modified Tank ($BF = 0.1$)

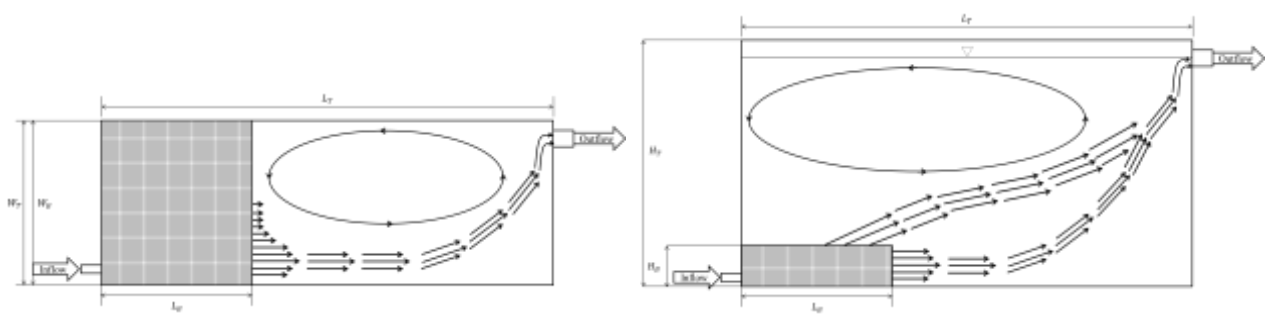

Plan View Section View

Figure 8: Tank with Inlet Box ($BF = 0.2$) ($Q \geq 20$GPM - 2" diameter inlet; $Q \geq 12$GPM – 1.5" diameter; $Q \geq 5$GPM – 1" diameter)

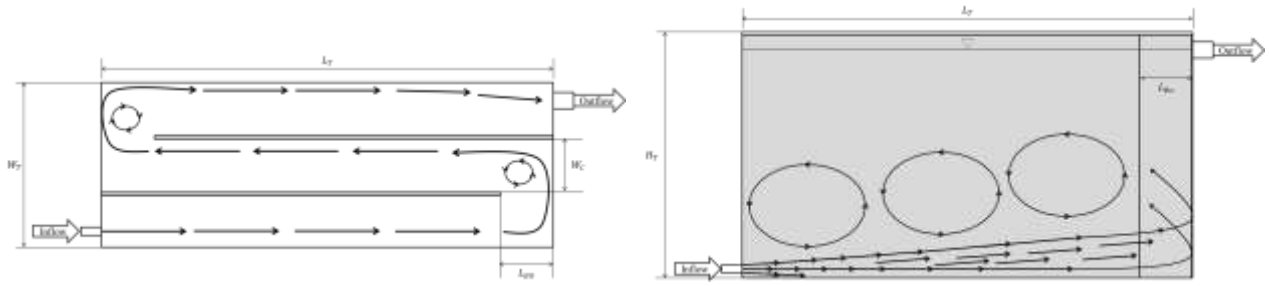

Plan View Section View

Figure 9: Baffled Tank (BF $= 0.3$)

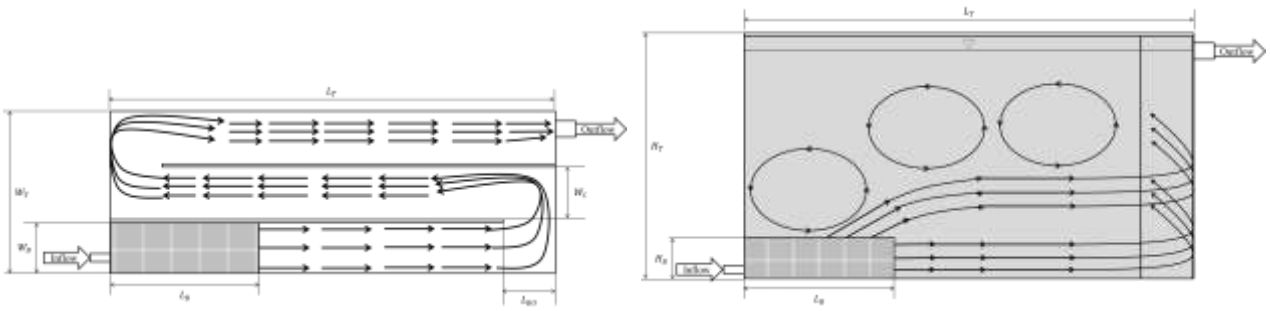

Plan View Section View

Figure 10: Baffled Tank - Inlet Box (BF $= 0.4$) ($Q \geq 20$GPM - 2" diameter inlet; $Q \geq 12$GPM – 1.5" diameter; $Q \geq 5$GPM – 1" diameter)

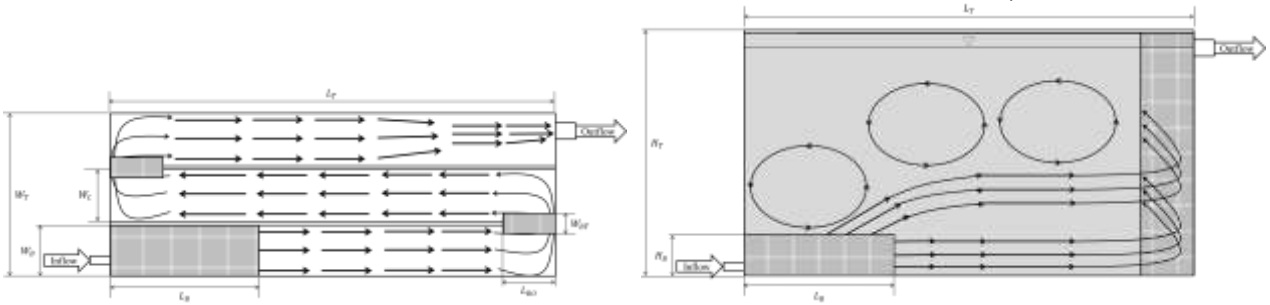

Plan View Section View

Figure 11: Baffled Tank - Inlet Box w/Turn Boxes ($BF = 0.5$) ($Q \geq 20$GPM - 2" diameter inlet; $Q \geq 12$GPM – 1.5" diameter; $Q \geq 5$GPM – 1" diameter)

4.1 Baffling Factors Awarded for Open Surface Concrete Tanks

Table 5: BF for Open Surface Concrete Tanks

Tank Setup	BF
Un-modified Tank	0.1
Tank with Inlet Box	0.2
Baffled Tank (per Figure 9)	0.3
Baffled Tank with Inlet Box	0.4
Baffled Tank with Inlet Box and Turn Boxes	0.5

4.2 Constraints of Open Surface Concrete Tank Systems

Constraints of the guidelines (Tank)

- Tank volume cannot exceed 5,000 gallons.
- Tank geometry must be rectangular.

Constraints of the guidelines (Baffles)

- Baffle material must meet ANSI/NSF 61 standards.
- Baffles must be placed parallel to the longest axis of the tank.
- The baffle opening (L_{BO}) must equal the channel width (W_c).
- A minimum of 2 baffles (3 channels) must be used.

Constraints of the guidelines (Packing Material)

- Packing material must meet ANSI/NSF 61 standards and must be less than 4 inches in diameter.
- Inlet box material must meet ANSI/NSF 61 standards.
- Tank flow rate cannot drop below the minimum velocities based on the inlet pipe for packing material modifications as described in section 4.3.
- Tank must be plumbed such that the inlet and outlet can never be at the same elevation and must provide the greatest vertical difference possible based on the tank configuration and hydraulics. When packing material is used on the inlet, the inlet must be at the bottom of the tank.

Constraints of the guidelines (Inlet Box):

- The inlet box width (W_B) must be equal to the width of the tank or the channel width (W_T, W_c).
- The inlet box length must be at least one third of the tank length ($L_B \geq \frac{1}{3} L_T$).
- The inlet box height (H_B) must be large enough to completely cover the inlet.

Constraints of the guidelines (Turn Boxes)

- Turn boxes must completely cover the baffle opening ($L_{TB} = W_c, H_{TB} \geq$ maximum water surface).
  The turn box width (W_{BT}) must be a minimum of 6 inches.

4.3 Systems Designed Outside of the Constraints

<u>Tanks Larger than 5,000 Gallons or Flow Rates Exceeding 50 GPM:</u> Tanks with volumes exceeding 5,000 gallons or flow rates exceeding 50 GPM are no longer considered small systems and are unlikely to exhibit similar flow dynamics to systems below the approved maximums. Turbulent characteristics, which govern the transport and diffusion of disinfectant, do not scale directly with size. The summarized concepts have not been tested at larger scales and therefore the guidance cannot be applied to these systems. Similarly, tanks with non-rectangular foot

prints will behave differently than the tested systems which support this Guidance Manual (see Open Surface Concrete Tanks in Appendix E).

Baffling factors for these systems must be obtained through the use of outside literature or through independent physical tracer studies. The study titled *Improving Clearwell Design for CT Compliance* (Crozes et. al. (1999), AWWA Research Foundation) has been widely cited to justify baffling factors at larger scale water treatment facilities.

Tracer studies can be performed using procedures outlined in Appendix C, specifically in Section 2.4 in "Evaluation of Flow and Scalar Transport Characteristics of Small Public Drinking Water Disinfection Systems Using Computational Fluid Dynamics". An example standard operating procedure (SOP) for performing a tracer analysis is provided in Appendix I.

<u>Alternate Baffle Configuration:</u> Placing baffles parallel to the longest axis of a given tank maximizes the length to width ratio of the resulting channels and reduces the amount of flow separation by limiting the number of turns. Setting the baffle opening (L_{BO}) equal to the channel width (W_c) also reduces flow separation by avoiding contraction or expansion of the flow area. Maximizing the length to width ratio and reducing the amount of flow separation encourages fully developed flow within the contact tank, increasing its hydraulic disinfection efficiency. Numerical justification for these concepts can be seen in Appendix G, specifically Section 3.6 in "Towards Improved Understanding and Optimization of the Internal Hydraulics of Chlorine Contact Tanks". A minimum of 2 baffles within the contact tank is required in order to mitigate the jet caused by the sharp inlet, otherwise fully developed flow does not occur and the effects of the baffle are lost (see Appendix E). For alternate baffle configurations, a tracer study must be performed to determine the BF for the tank system.

<u>Non-Rectangular Geometry:</u> Tanks with non-rectangular foot prints will behave differently than the systems which supported this Guidance Manual and should thus be considered separately (see Appendix E). It is unlikely that the application of internal baffling and random packing material to tanks with non-rectangular geometry will yield similar results to the rectangular contact tanks described in this section. If a tank is circular and conforms to respective constraints, modifications recommended in Sections 6 and 7 of this document may be applied. Otherwise, baffling factors of non-rectangular systems must be determined through the application of tracer studies.

<u>Operating Flow Rates Below 20 GPM:</u> Small systems that use a 2-inch diameter pipe at flowrates below 20 GPM approach a regime change at which inlet velocities are too low to be constructively dissipated by the proposed application of random packing material. At 20 GPM, the flow approaches a transition between turbulent and laminar flow regimes. Introducing random packing material benefits the system by dissipating the high velocity jet introduced by

the use of a sharp inlet, which decreases short-circuiting and disperses the incoming flow. As the flow rate drops so does the amount of energy contained in the incoming jet. When the inlet flow is below 20 GPM, the amount of energy in the incoming jet is low. The enhanced dispersion in such cases is negated. Therefore, the **minimum** operating flow rates are as follows:

- For 2-inch pipe: 20 GPM
- For 1½-inch pipe: 12 GPM
- For 1-inch pipe: 5 GPM

The above flow rates preserve the inlet velocity allowing dispersion of the jet. See "Open Surface Concrete Tanks" in Appendix E for additional justification. It is recommended that internal baffling be used in these cases if an increase in baffling factor is desired (see Appendix G, specifically Section 3.5 in "Towards Improved Understanding and Optimization of the Internal Hydraulics of Chlorine Contact Tanks" or Appendix F, specifically Section 3.3 in "Flow Dynamics and Scalar Transport in Drinking Water Contact Tanks").

Alternate Inlet/Outlet Configurations: A system that is plumbed such that the influent enters at the top of the tank and the effluent leaves at the bottom of the tank will receive similar benefits from baffling as a system where the inlet enters at the bottom and the outlet exits at the top of the tank. However, the application of packing material in this tank setup would require that the material to be suspended and the resulting flow dynamics would not behave similarly. Tracer studies must be used to determine baffling factors in systems attempting to use random packing material with plumbing that differs from the prescribed conditions.

Inlet Box and Turn Boxes: Geometric constraints placed on the design of inlet and turn boxes are based off of studies outlined in Appendix E and should not be modified.

4.4 Example: Open Tank Contactor Calculation

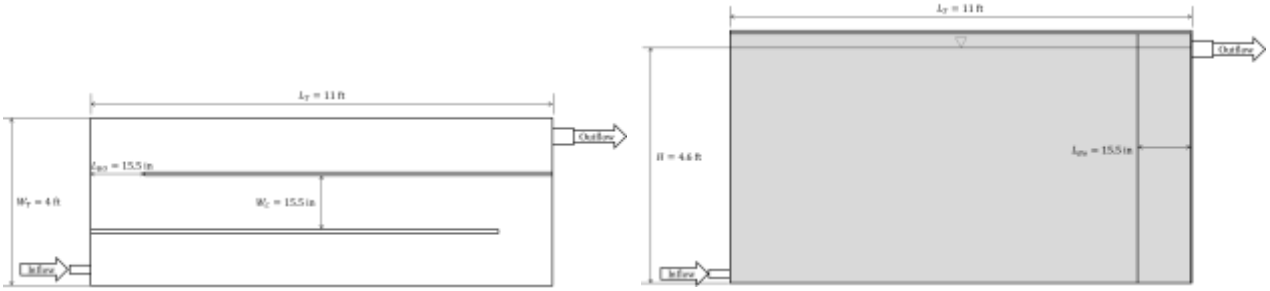

Plan View Section View

Figure 12: Open Surface Concrete Tank Used in Example

Tank Type	Baffled Tank

Tank Volume (V)	1,500 gallons
System Flow Rate (Q)	25 GPM

$$\mathrm{TDT} = \frac{1500\ \mathrm{gallons}}{25\ \mathrm{GPM}} = 60\ \mathrm{minutes}$$

From Table 5 the BF of a baffled tank as shown in the schematic in Figure 12 will be 0.3. The contact time (T) is then calculated by:

$$\mathrm{T} = \mathrm{BF} \times \mathrm{TDT}$$
$$\mathrm{T} = 0.3 \times 60 = 18\ \mathrm{minutes}$$

The system in this example would have a BF of 0.3 with a T of 18 minutes.

5 Baffling Factors for Non-Pressurized Non-Concrete (Plastic) Tanks

Non-pressurized portable water storage tanks (up to 1,000 gallons in volume) can be used as an inexpensive chlorine contact tank. These tanks can operate under a wide range of flow rates and are available in various sizes and configurations. While these tanks receive low BFs (in most cases this is 0.1) (see the document found in Appendix C, specifically Section 4.3.3 on page 91 in "Evaluation of Flow and Scalar Transport Characteristics of Small Public Drinking Water Disinfection Systems Using Computational Fluid Dynamics" and/or Appendix F, specifically Section 5.3.3 on page 70 of "Flow Dynamics and Scalar Transport in Drinking Water Contact Tanks"), several modifications are available to increase the BF up to 0.6. Both doorway tanks (Figure 13) and horizontal cylindrical tanks (Figure (a)) can be modified with packing material. The vertical cylindrical tank shown in Figure (b) can be modified with either packing material or an inlet manifold. For more detail about these modifications please see Sections 6 and 7 of this guidance document.

Figure 13: Example of a "Doorway Tank"

Horizontal Tank (a)

Vertical Tank (b)

Figure 14: Example of Cylindrical Tanks

5.1 Baffling factors awarded for non-pressurized tank systems

Table 6: Un-modified Plastic Tank BF

Tank Type	BF
Horizontal or Vertical Cylindrical Tank	0.1
Doorway Tank	0.2

5.2 Constraints for Non-pressurized Plastic Tank Systems

- Tank volume cannot exceed 1,000 gallons
- Tank flow rate cannot exceed 50 GPM
- Inlet and outlet should be located so that they are not within close proximity to each other (e.g. both the inlet and outlet should be not be located at the bottom of the tank).

5.3 Systems Designed Outside the Constraints

A system may use a tank larger than 1,000 gallons without modifications and maintain the stated BF; however, these larger volume systems will be unable to receive a higher BF through the modifications listed in Sections 6 and 7 without a tracer test. Thus, a tracer test will be needed to determine the BF because tank volumes over 1,000 gallons were outside of the range tested by CSU. Please refer to Section 6 and Section 7 in this document for the specific reasons for this limitation. Furthermore, horizontal and doorway tanks can only be modified with packing material. Vertical Tanks can be modified with either packing material or inlet manifolds. Details of recommendations are outlined in Sections 6 and 7 in this document.

A system may operate at a flow rate greater than 50 GPM and maintain the stated BF; however these higher flow rate systems will be unable to receive a higher BF through modifications listed in Section 6 and 7 without a tracer test. This tracer test will be needed to determine the BF because system flow rates over 50 GPM were outside of the range tested by CSU. Please refer Section 6 and Section 7 in this document for the specific reasons for this limitation.

For tanks plumbed in series, the BF may be higher than those listed in Table 6. However, in order to claim a higher BF for a system using more than one tank in series, a tracer study needs to be conducted to ascertain the actual BF.

5.4 Example: Open tank calculation

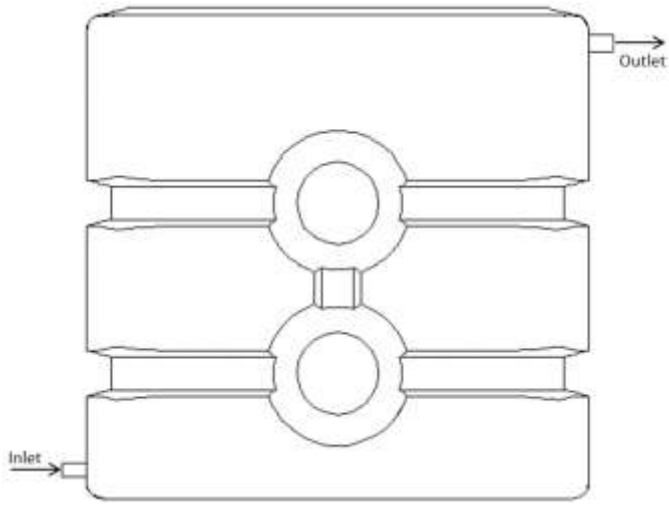

Figure 15: Doorway Tank Used in Example

Tank Type	Doorway Tank
Tank Volume (V)	500 gallons
System Flow Rate (Q)	25 GPM

$$\text{TDT} = \frac{500 \text{ gallons}}{25 \text{ GPM}} = 20 \text{ minutes}$$

From Table 6 the BF of a doorway tank shown in Figure 15 will be 0.2. The contact time (T) is then calculated by:

$$\text{T} = \text{BF} \times \text{TDT}$$
$$\text{T} = 0.2 \times 20 = 4 \text{ minutes}$$

The system in this example would have a BF of 0.2 with a T of 4 minutes.

6 Baffling Factors for Inlet Manifolds

Inlet manifolds are an efficient modification to improve the BF of vertical cylindrical water contact tanks (see Appendix G, specifically Section 4.4 of "Towards Improved Understanding and Optimization of the Internal Hydraulics of Chlorine Contact Tanks"). While these inlet manifolds are more difficult to implement than packing material, they are much more economical. Inlet manifolds increase the BF of a system by introducing the influent in such a way that the bottom of the tank is used to dissipate energy and reduce the flow velocity. Additionally, as more inlets are added to the manifold the flow is introduced slower into the tank and the design of the manifolds allows the influent to evenly spread out across the tank. Figure shows the four types of inlet manifolds tested. Figure 5 shows an installed example of a sixteen-inlet manifold.

For more information on inlet manifolds, as well as detailed information about the study used to develop these guidelines, please refer to Appendix G, specifically Section 4.3 of "Towards Improved Understanding and Optimization of the Internal Hydraulics of Chlorine Contact Tanks".

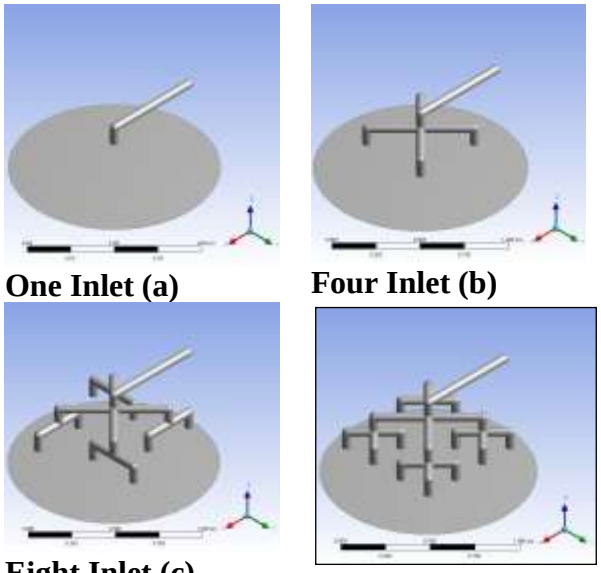

One Inlet (a) **Four Inlet (b)**

Eight Inlet (c) **Sixteen Inlet (d)**

Figure16: Geometry of Inlet Manifolds

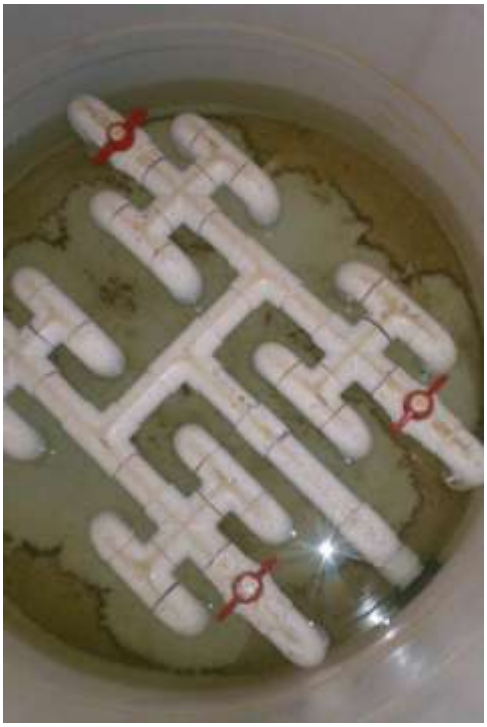

Installed View

Uninstalled Side View (note the "PVC" legs used to support manifold)

Figure 57: Example of a sixteen inlet manifold

6.1 Baffling factors awarded for Manifolds

Table 7 lists the *BF* of systems with inlet manifolds. The manifold should be constructed such that the inlets are symmetrical and will evenly distribute the flow across the tank floor (see Figure and 17 for examples). The inlet manifold needs to be installed at a very specific height. The inlet manifold must be located at 10% of the total tank height. The 10% height ratio (H_r) is the ratio of how high the inlet (H_{inlet}, Figure 18) is above the tank floor to the total height of the tank (H_{Tank} in Figure 18). Please see the equation below and Figure 18 to determine how far above the tank floor the inlet manifold should be installed. The pipe used to create the inlet manifold must be equal to or greater than the size (diameter) of the existing inlet if a system is being retrofitted.

Table 7: Baffling factors for Inlet Manifolds

Number of Inlets	BF
1	0.1
4	0.2
8	0.3
16	0.5

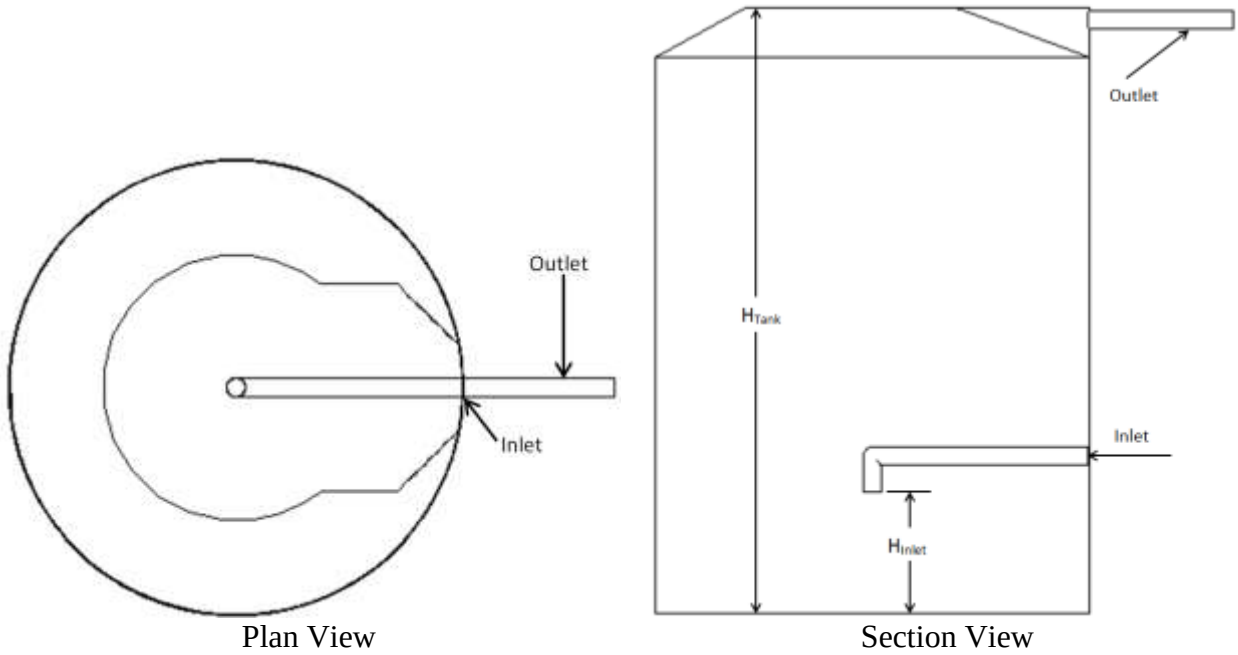

Figure 18: Location of Inlet Manifold Variables

The equation to calculate the height at which to install the inlet manifold is:

$$H_{Inlet} = 0.1 \times H_{Tank}$$

6.2 Constraints for manifold systems

- Tank must be a vertical cylinder in shape (see Figure (b)).
- Tank flow rate cannot exceed 50 GPM.
- Tank volume cannot exceed 1,000 gallons.
- Tank height to diameter (H/D) ratio must be 1.5 or greater.
- Tank must be plumbed such that the inlet is at the bottom with the outlet at the top (see Figure 18).

Manifold inlets must be pointing towards the floor of the tank and be centered about the vertical centerline of the tank (See

- **Figure** for a single inlet manifold example and Figure 19 for a sixteen inlet manifold example)
- Tank height ratio $H_r = H_{inlet} / H_{Tank}$ must be 10% (see
- **Figure** 18).
- Manifold Inlets must be pointed towards the bottom of the tank.
- Manifold pipe size should be at least equal to the inlet diameter of the tank.
- If an existing system is being modified, the manifold pipe size (diameter) must be equal to or greater than the size of the existing inlet pipe.

6.3 Systems Designed Outside the Constraints

If a system uses a tank larger than 1,000 gallons a tracer study will be needed to verify the BF. This tank volume is outside of those tested at CSU. See Appendix G, specifically Section 4.3.2.2 of "Towards Improved Understanding and Optimization of the Internal Hydraulics of Chlorine Contact Tanks" for more information on the manifold testing.

If a system operates at a flow rate higher than 50 GPM a tracer study will be needed to determine the BF. Flow rates exceeding 50 GPM are beyond those tested at CSU.

If a system uses a tank with an H/D ratio of less than 1.5 a 50% penalty will be applied to all BFs, with the exception of a single inlet case (e.g. a one inlet manifold would still receive a BF of 0.1, while a sixteen inlet manifold would receive a BF of 0.25). Please see Appendix G, specifically Figure 43 and Figure 48 of "Towards Improved Understanding and Optimization of the Internal Hydraulics of Chlorine Contact Tanks" for justification.

If a system uses a tank height ratio H_r other than 10%, a 50% penalty will be applied to all BFs, with the exception of a single inlet case (e.g. a one inlet manifold would still receive a BF of 0.1, while a sixteen inlet manifold would receive a BF of 0.25). Please see Appendix G, specifically Figure 43 and Figure 48 of "Towards Improved Understanding and Optimization of the Internal Hydraulics of Chlorine Contact Tanks" for justification.

6.4 Example: Inlet manifold calculation

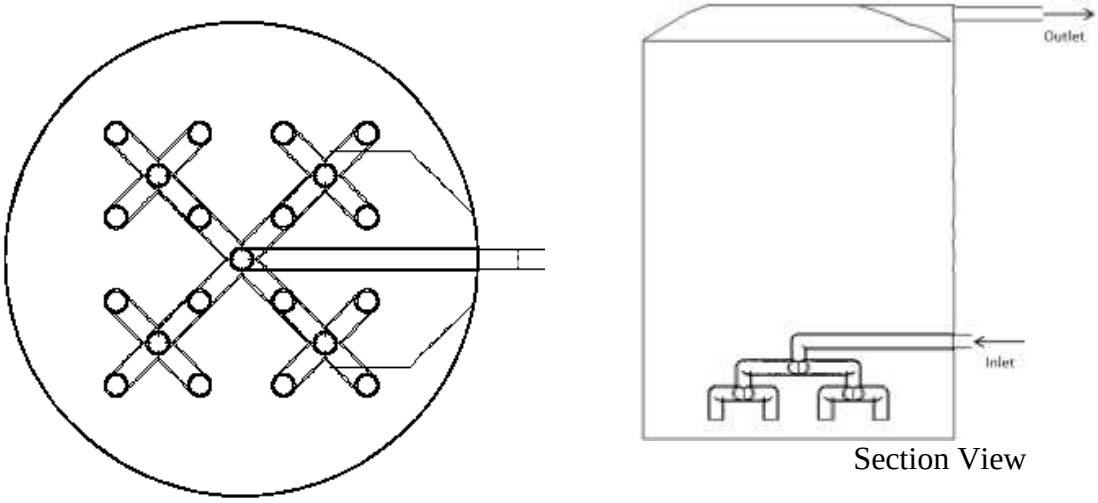

Section View

Plan View

Figure 19: Inlet Manifold System Used in Example

Original BF	0.1

Tank volume (V)	500 gallons
Number of inlets in manifold	16
BF of tank with inlet manifold	0.5
Tank Height (H)	6 feet
System flow rate (Q)	30 GPM
TDT	16.7 minutes
Original contact time (T)	1.7 minutes
Tank Diameter (D)	4 feet

The H/D ratio is:

$$\frac{\mathrm{H}}{\mathrm{D}} = \frac{6\ \text{feet}}{4\ \text{feet}} = 1.5$$

The inlet height is then calculated by:

$$\mathrm{H}_{\mathrm{Inlet}} = 0.1 \times 6\ \mathrm{ft} = 7.2\ \text{inches}$$

The new contact time (T) can then be calculated by:

$$\mathrm{T} = 0.5 \times 16.7 = 8.35\ \text{minutes}$$

The system in this example (Figure 19) would have a sixteen-inlet manifold that is 7.2 inches above the tank floor. This inlet manifold would give the tank a final BF of 0.5 and a new contact time of 8.35 minutes, which will increase the contact time by 500%.

7 Baffling Factors with Tank Packing Material

Tower packing material has been used to improve the operating efficiency of distillation towers and can also be utilized in plastic water tanks. The guidance provided in this section only applies to random packing material that is 4 inches in diameter or less. Random packing material can significantly increase the BF of the contact tank while causing a minimal loss of contact volume. Figure 20 shows examples of three sizes of random packing material. Both Lantec and Jaeger Products manufacture random packing material that meets ANSI/NSF 61 criteria.

For more information on packing material, as well as detailed information about the study used to develop these guidelines, please refer to Appendix F, specifically Section 5.4 on page 76 of "Flow Dynamics and Scalar Transport in Drinking Water Contact Tanks" and/or the journal article referred to in Appendix H.1.

Figure 20: Examples of Random Packing Material

7.1 Baffling factors awarded for Packing Material

Table shows the revised baffling factor a system can receive based on the percentage of the random packing material in the contact tank. Please note that while this table was developed using the spherical packing material shown in Figure 20 this table also applies to other cylindrical and spherical shapes of random packing (e.g. rings, saddles, snowflake, etc.). The

void ratio of this material will not impact the performance. The void ratio is the volume of empty space divided by the total volume of the material.

Table 8: Revised BF and Percent of Available Tank Volume with Random Packing Material added to an open tank with a BF of 0.1 (see Section 4 and 5 for Open Tank BFs)

Percentage of Tank Filled with Packing Material	New BF of System	Percent of Available Tank Volume* (V_{ratio})
0%	0.1	100%
25%	0.2	95%
50%	0.3	90%
75%	0.45	85%
100%	0.6	80%

*Note: This assumes the packing material has a void fraction of 0.8. Packing material tested at slightly higher void ratios (0.90-0.95) provide higher baffling factors (see Appendix H.1, specifically the journal article referenced therein). Please refer to Appendix H.2 for equation to calculate Percent of Available Tank Volume that can be used for materials with void fractions other than 0.8.

Once the amount of packing material to be used has been decided the useable tank volume (V_{system}) and the theoretical detention time (TDT) needs to be recalculated. The volume of the tank will decrease due to the fact that the packing material takes up a certain percentage of the volume. In order to calculate the new V_{system} and TDT, the following will be needed:

- Tank Volume in gallons (V_{tank})
- Percent of Available Tank Volume (V_{ratio})
- Peak hourly flow rate in gallons per minute (Q)

The new V_{system} can be calculated by:

$$V_{system} = V_{tank} \times \frac{V_{ratio}}{100}$$

The new TDT can then be calculated by:

$$TDT = \frac{V_{system}}{Q}$$

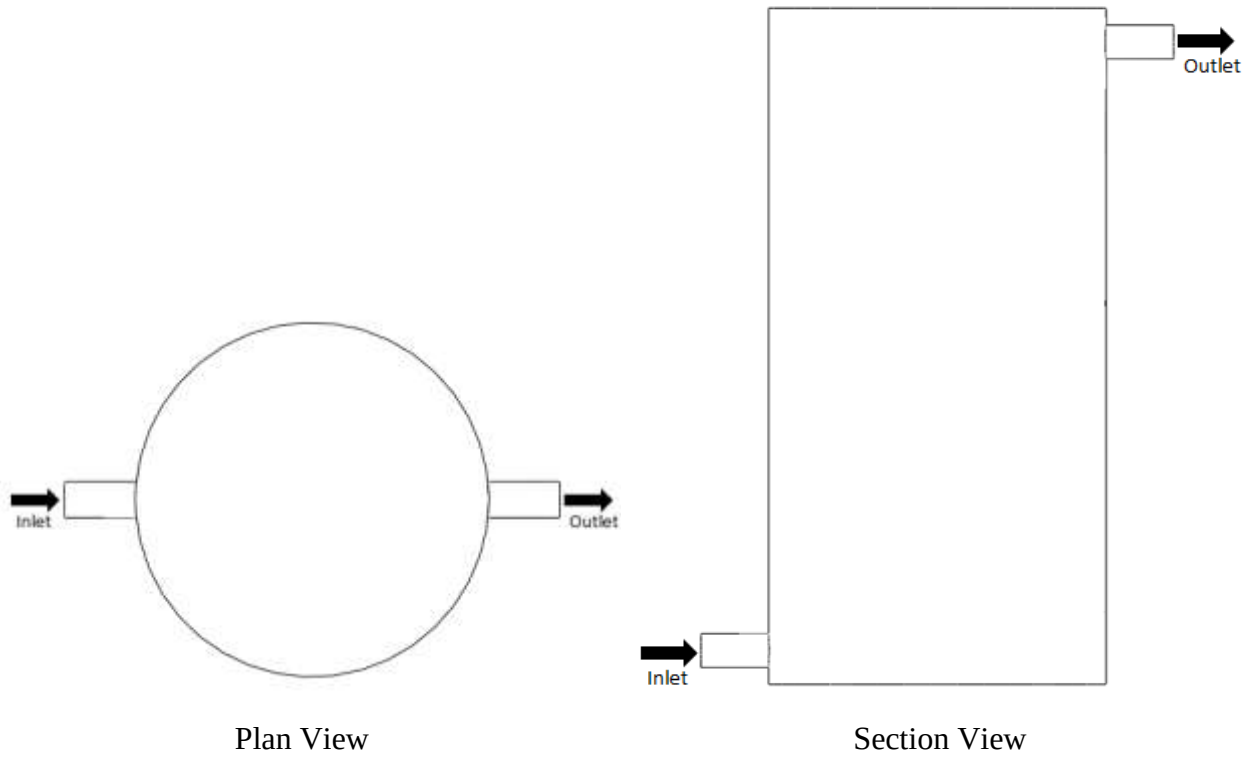

Figure 21: Example of tank plumbing.

7.2 Constraints for Packing Material

- Only random packing material that is 4 inches in diameter or smaller can be used.
- Tank volume cannot exceed 500 gallons.
- Tank flow rate cannot exceed 50 GPM
- Tanks must be plumbed such that the influent enters at the bottom and the effluent leaves at the top of the tank as shown in Figure.

7.3 Systems Designed Outside the Constraints

If a system uses a tank larger than 500 gallons, a tracer study must be used to determine the system's BF. Tanks larger than 500 gallons are outside the range of the tests conducted at CSU. See Appendix F, specifically Section 5.4.1 of "Flow Dynamics and Scalar Transport in Drinking Water Contact Tanks" or Appendix H.1 for justification.

If a system operates at a flow rate higher than 50 GPM, a tracer study must be used to determine the system's BF. Flow rates above 50 GPM are outside of those tested at CSU.

If a system uses packing material with a diameter greater than 4 inches, a tracer study must be used to develop the system BF. See Appendix F, specifically Section 5.4.1 of "Flow Dynamics and Scalar Transport in Drinking Water Contact Tanks" or Appendix H.1 for justification. It must be noted that packing material smaller void ratios (less than 0.8) imply significant reduction in useable tank volume and hence might not be practically useful for this purpose. Higher void ratios up to 0.95 have been tested and can be used. However, no additional baffling factor credit will be provided to those shown in Table 8.

If a system reverses the flow direction from that shown in this section of the guidance document (see Figure 21), the system can only receive the improved BF if the tank is completely full of packing material. When the contact tank is completely full of packing material, the system will be credited a BF of 0.6 and the available tank volume will still need to be reduced as shown in the example below. In this case the only difference would be the variable V_{tank} should be the lowest system volume experienced during normal operation. For justification please see Appendix H.1.

7.4 Example: Tank Packing Material

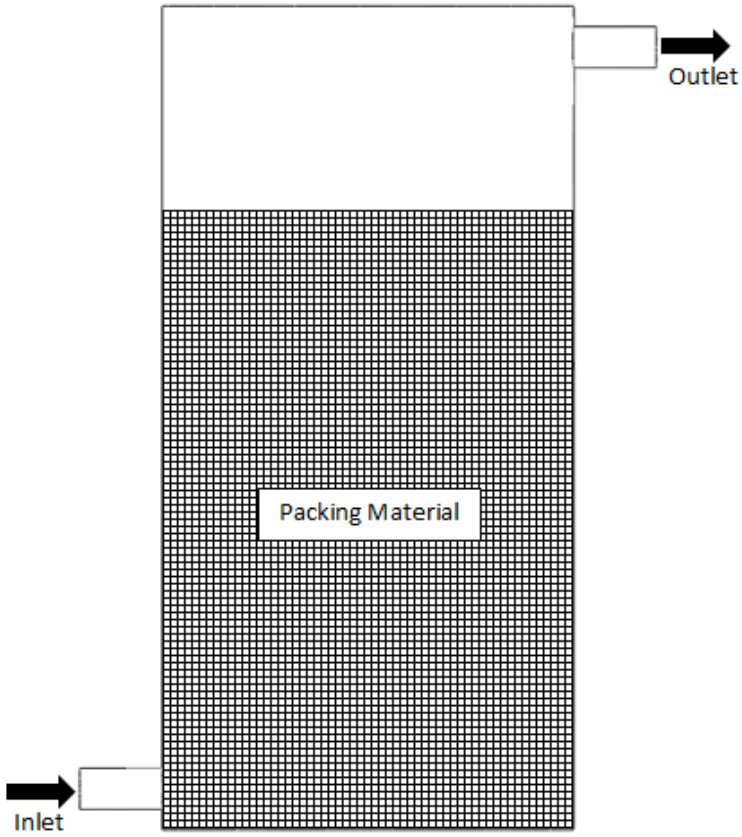

Figure 22: Packing Material System Used in Example

Original BF	0.1
Tank volume w/o packing material (V_{tank})	50 gallons
Percent of tank filled with packing material	75%
BF of tank with packing material	0.45
Percent of available tank volume (V_{ratio})	85%
System flow rate (Q)	10 GPM
Original contact time (T)	0.5 minutes

$$V_{system} = 50 \text{ gallons} \times \frac{85}{100} = 42.5 \text{ gallons}$$
$$TDT = \frac{42.5 \text{ gallons}}{10 \text{ GPM}} = 4.25 \text{ minutes}$$

The new contact time (T) can then be calculated by:

$$T = BF \times TDT$$
$$T = 0.45 \times 4.25 = 1.9 \text{ minutes}$$

The system in this example (shown in Figure 22) will have a final BF of 0.45 and a new TDT of 4.25 minutes, which will increase the contact time from 0.5 minutes to 1.9 minutes. This is a 380% increase in contact time from the original tank.

APPENDICES

APPENDIX A – Log Inactivation Calculations

Disinfection: CT and Microbial Log Inactivation Calculations Brochure
Colorado Department of Public Health and Environment

Link

APPENDIX B Phase 2 Report

Phase 2 Final Report

The Phase 2 Final Report was the document that summarized the research conducted during Phases 1, 2 and 3 of the research project performed by CSU. This document contains the Phase 1 literature review on small water systems, water treatment research, tracer studies, and computational fluid dynamics (CFD) methods. It also contains the Phase 2 research performed which involved experimental and computational modeling studies on a pipe loop contactor, pressurized storage tanks, and non-pressurized plastic tanks. Finally, the Report presents the Phase 3 disinfection analysis of these pre-engineered systems. Please note that this report has several appendices contained within it as hyperlinks.

Link

APPENDIX C Evaluation of Flow and Scalar Transport

Evaluation of Flow and Scalar Transport Characteristics of Small Public Drinking Water Disinfection Systems Using Computational Fluid Dynamics

MS Thesis by Jordan M. Wilson (2011), Department of Civil and Environmental Engineering, Colorado State University

Advisor – Professor Karan Venayagamoorthy

This thesis focuses on the evaluation of flow and scalar transport characteristics of small disinfection systems, primarily through computational fluid dynamics (CFD) as well as physical conservative tracer studies. Original research was performed on a pipe loop, series of pressurized tanks, and two separate open surface tank contact systems and a case study was performed on a baffled tank system. The flow dynamics for each of these respective disinfection systems were evaluated using CFD. Research presented in this study using CFD models and physical tracer studies shows that evaluation methods based upon *TDT* tend to overestimate, severely in some instances, the actual hydraulic efficiency as obtained from the systems' flow and scalar transport dynamics and subsequent RTD curves. The pipe loop system was dominated by advection and thus showed little variance in the values of BF. Analysis of the series of pressurized tank systems showed significant regions of turbulent mixing and recirculation corresponding to a system that was much less efficient than the pipe loop system. The open surface (plastic) tank systems exhibited the most uneven flow paths and lowest efficiencies (BF) seen in this study. These systems exhibited significant degrees of short-circuiting and recirculation largely due to their inlet and outlet configurations.

Link

APPENDIX D Pipe Loop CFD Models

Pipe Loop CFD Models

D.1 How to Calculate Minimum Flow Velocities

The minimum flow velocity in pipe loop contactors is calculated using the Reynolds Number. In order to receive full credit, the pipe loop contactor must operate in the turbulent flow regime. To achieve this, the Reynolds Number of the flow must be greater than 4000.

$$Q = \frac{Re \times \nu \times \pi \times D}{4},$$

where:

Q = System flow rate in cubic feet per second (CFS)
Re = 4000
ν = kinematic viscosity of water ($1.052 \times 10^{-5} ft^{s}/s$ if the water is at 70°F)
π = 3.14
D = pipe diameter in feet

Example:

Pipe Size: 6 inches (0.5 feet)
Water temperature: 70°F

$$Q = \frac{4{,}000 \times 1.052 \times 10^{-5} \times \pi \times 0.5}{4} = 0.0165\ ft^3/second = 7.42\ GPM$$

D.2 Pipe Loop Contactor Laminar/Turbulent CFD Study

Table 9: Physical System Specifications (note this pipe loop contactor had no bends within the system)

Pipe Length	75 feet
Pipe Diameter	6 inches
System Volume	110.2 gallons
L/D Ratio	150

Table 10: Flow Conditions for Pipe Loop Contactor Study

	Laminar	Turbulent
Re	1500	15000
Flow Rate (cfs)	.00589	.0589
Flow Rate (GPM)	2.64	26.44
Velocity (ft/s)	0.03	0.3
TDT (seconds)	2500	250
BF*	0.7	0.9

* Note: The BF for the turbulent pipe loop contactor is 0.9 and not 1.0 that would be awarded for this system. This is because a BF = 1.0 is not an exact fit for the system in question. As more piping is added to this system, the BF would asymptotically approach 1.0.

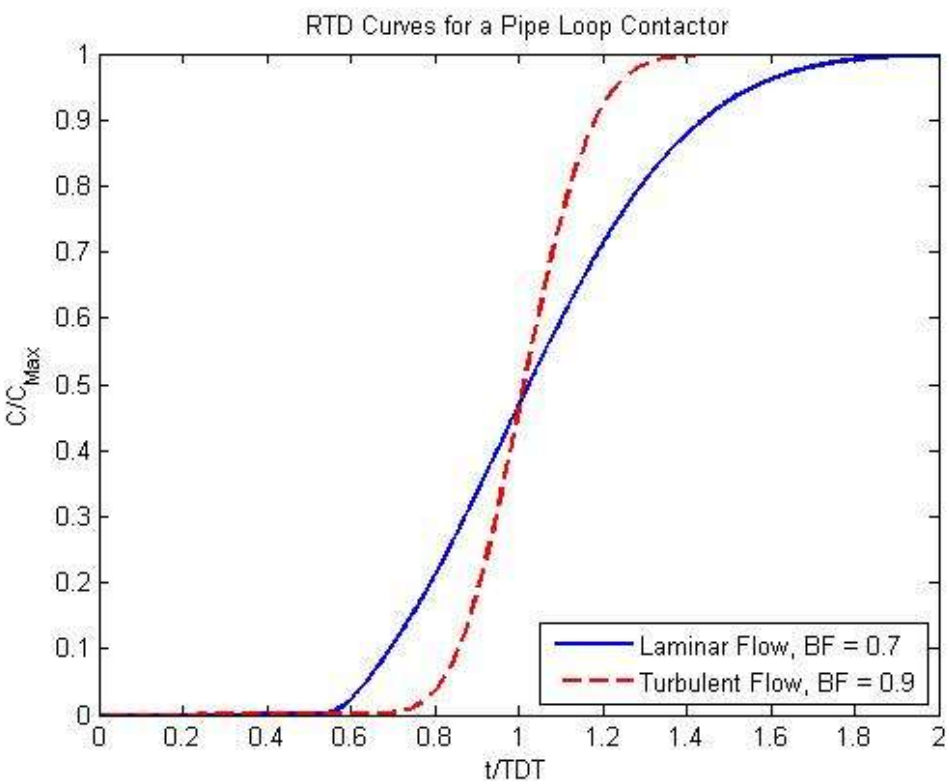

Figure 23: Pipe Loop Contactor RTD Curves from Laminar/Turbulent Study

D.3 Pipe Loop Contactor L/D CFD Study

Table 11: Flow Conditions for Pipe Loop Contactor Study

	Turbulent
Re	15000
Flow Rate (cfs)	0.0589
Flow Rate (GPM)	26.44
Velocity (ft/s)	0.3
TDT (seconds)	250

Table 12: Physical System Specifications (note this pipe loop contactor had no bends within the system).

	L/D Ratio	
	40	150
Pipe Length	20	75 feet
Pipe Diameter	6 inches	6 inches
System Volume	29.4 gallons	110.2 gallons
TDT	67 seconds	250 seconds
BF	0.7	0.9

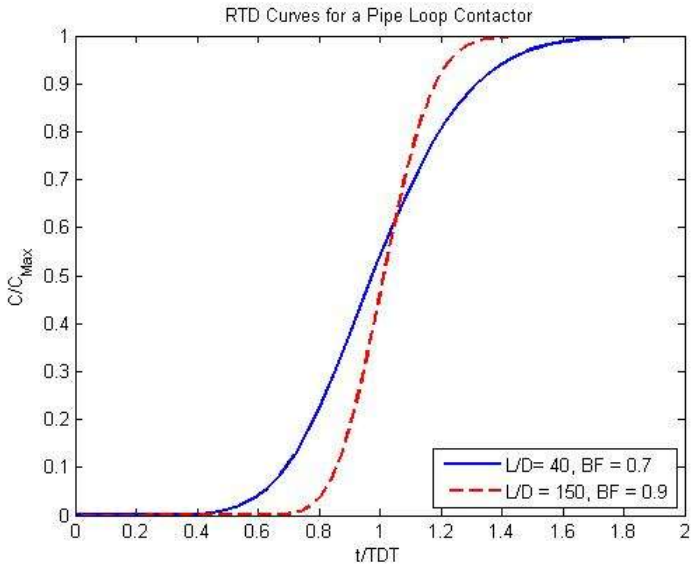

Figure 24: Pipe Loop Contactor RTD Curves from L/D Study

APPENDIX E Open Surface Concrete Tanks

Open Surface Concrete Tanks

The purpose of this appendix is to supplement and justify the material presented in Section 4 of this document. Studies summarized in this appendix were conducted at the Engineering Research Center of Colorado State University (CSU) by Justin J. Kattnig with assistance from Taylor C. Barnett and Luke Boustred under the supervision of Professor Subhas Karan Venayagamoorthy, in partial requirement of his Master of Science (MS) Degree in Civil and Environmental Engineering. All reported research was funded by the Colorado Department of Public Health and Environment and will later be published as a full academic MS thesis at CSU.

All summarized work represents a subset of tests from an ongoing effort to understand the complex nature of flow dynamics within water disinfection contact tanks in order to aid the development of beneficial tank modifications. Methods involved in this process include the use of computational dynamics (CFD) and physical tracer studies. In particular this study investigated the installation of baffles and the use of random packing material in open surface concrete tanks. All tests and investigations were conducted on a 1500 gallon rectangular tank with a sharp circular inlet (Shown in Figure 4 in the guidance document).

Initially, CFD models were used to obtain details about average velocity fields in the 1500 gallon tank and to produce modeled RTD curves. This was done for the empty tank and for two separate baffle configurations (1 and 2 baffles). Several configurations were selected and physically constructed in the existing tank. After CFD models were experimentally validated, random packing material was placed within the tank at areas of high velocity and flow separation (at the inlet and at baffle turns). Results suggest that the innovative use of random packing material and internal baffling can significantly increase the efficiency of open surface systems. Packing material was not modeled using CFD due to complexity and high computational cost.

E.1 Tank Geometry

Schematics of the studied system are shown in
Figure **6**. The drawing on the left represents the physical layout of the tank, which is comprised of 6” thick reinforced concrete. The drawing on the right represents the tank volume, which was used to develop CFD models. Flow enters the system at the bottom of the tank through a 2” diameter pipe and exists at the top through a 4” diameter pipe.

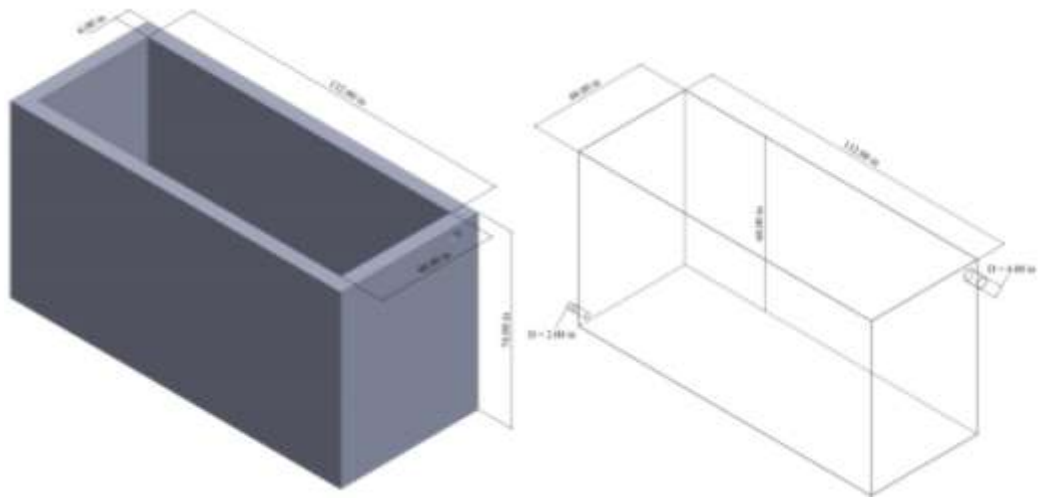

Figure 65: Physical Tank Geometry (Left) and Modeled Tank Geometry (Right)

E.2 CFD Modeling

CFD models were developed and simulated using ANSYS WorkBench and ANSYS Fluent in order to estimate the average velocity profile and hydraulic disinfection efficiency of the basic system displayed in
Figure **6**. This process was repeated for two additional cases, which are outlined in Figure 7. All geometry was created and meshed using software attached to ANSYS WorkBench and then imported into ANSYS Fluent for analysis. Flow and scalar transport were modeled as outlined in Appendix F, specifically Section 2.4.2 on page 12 in Flow Dynamics and Scalar Transport in Drinking Water Contact Tanks, which is not described here for the sake of brevity. Also similar to the study conducted by Barnett (see Appendix F), a rigid lid model was applied. Each scenario was run at a specified flow rate of 20 gallons per minute and the flow depth was estimated using physical measurements and data summarized in Appendix F, specifically Section 3.3.3 on page 30 in Flow Dynamics and Scalar Transport in Drinking Water Contact Tanks found. This was found to be around 5.23 feet (62.7 in) for all cases.

Within each model a passive scalar was continuously injected at the inlet of the tank and a flux averaged monitor was placed at the outlet. Data resulting from this setup yields a representative RTD curve that can be used to estimate the baffling factor (for more information on RTD curves and baffling factors please see Section 2.2 on page 6 in Flow Dynamics and Scalar Transport in Drinking Water Contact Tanks found in Appendix F). These numerical RTD curves were compared to results from physical tracer studies in order to validate the outlined methodology.

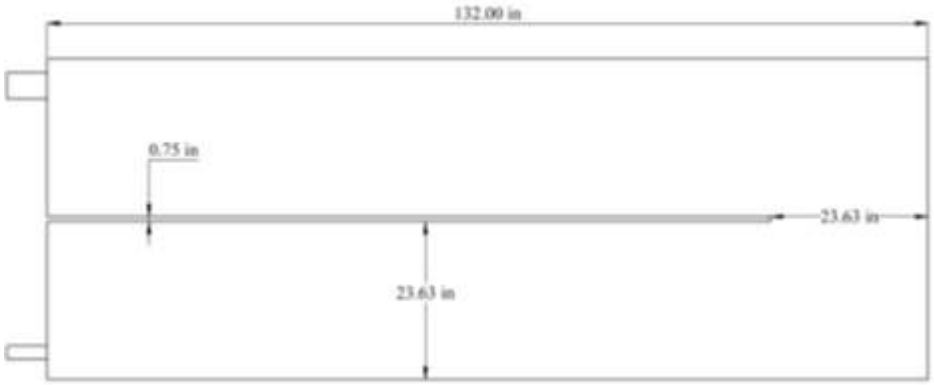

Additional Case I: One Baffle

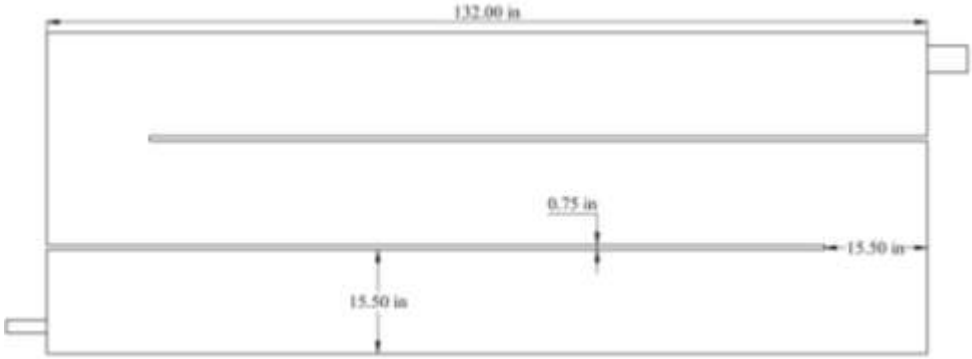

Additional Case II: Two Baffles

Figure 76: Additional Modeling Cases

Geometry of additional modeling cases were designed based on studies in Section 3.4 on page 32 in Flow Dynamics and Scalar Transport in Drinking Water Contact Tanks found in Appendix F and Section 3.5 on page 38 in Towards Improved Understanding and Optimization of the Internal Hydraulics of Chlorine Contact Tanks found in Appendix G. A parametric study similar to that conducted by Barnett (see Appendix F) is currently being conducted by Kattnig for baffles parallel to the long axis. The additional modeling cases represent the beginning of this work.

E.3 Physical Tracer Methodology and CFD Validation

Physical tracer studies were conducted in a controlled lab setting using a full sized prototype. Flow was brought to steady state and then tracer solution was continually injected into the flow using a constant displacement pump. Tracer was fully integrated before entering the tank with the use of a static mixing tube. Effluent was monitored with the use of a fabricated flow through device and sampling times were based off of observed results from the CFD models. Two separate tracers were used in this study: sodium chloride and lithium chloride. Sodium chloride was used for the majority of the physical tracer studies and was measured indirectly with the use of a YSI EC300A conductivity meter. Lithium chloride was used sparingly due to financial

constraints. For lithium chloride tests samples were taken at predetermined time intervals via a diversion valve on the effluent and then analyzed in the Soil, Water, and Plant testing laboratory at CSU using inductively coupled plasma-atomic emission spectroscopy. For more information on applied testing procedures see the document entitled "Improving Drinking Contact Tank Hydraulics using Random Packing Material" listed in Appendix H.

Both CFD models representing the base case from
Figure **6** and Additional Case II from Figure 7 were validated with the use of physical tracer studies. Physical tracer studies were conducted for the base case using sodium chloride and physical tracer studies were conducted for Additional Case II using sodium chloride and lithium chloride. The physical construction of Additional Case II can be seen in
Figure **8**. The normalized plots of the study results can be seen in Figure 9 and Figure 10. CFD results and physical tracer study results agree exceptionally well, validating the proposed computational models.

Figure 87: Physical Setup for Additional Case II

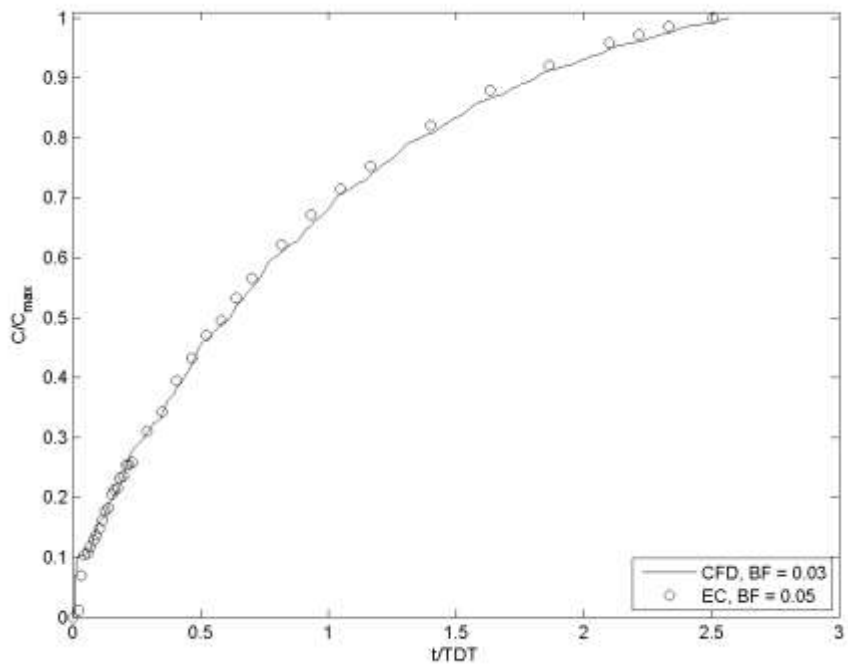

Figure 98: Base Case Model Validation

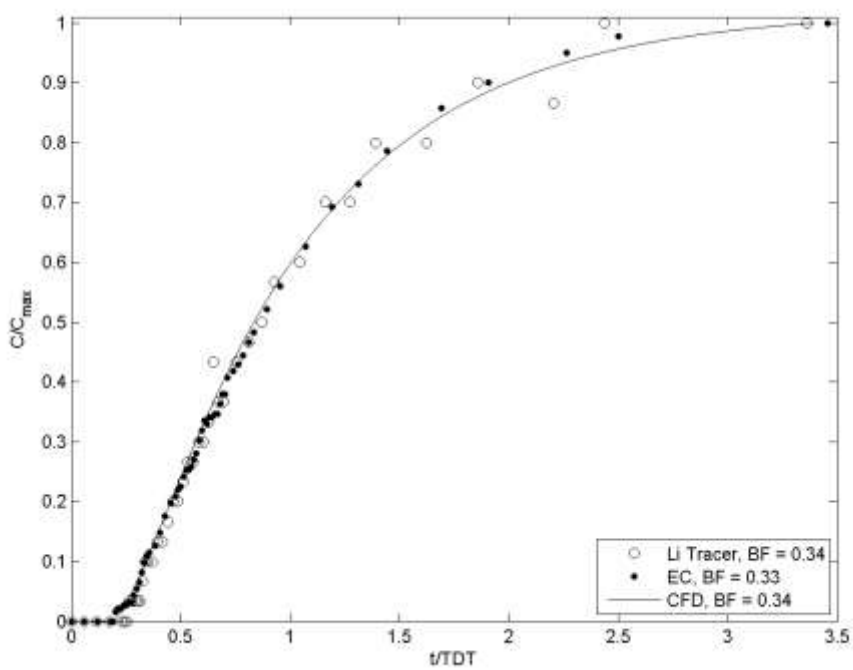

Figure 109: Additional Case II Validation

E.4 CFD Discussion

Once the applied CFD methodology was validated the derived velocity fields could be used to design potential applications of random packing material. Contours of velocity for the three modeled cases can be seen below in Figure 30 - 32. Displayed units are $V/V_{average}$ where V is the point velocity magnitude and $V_{average}$ is the average velocity magnitude of the plotted tank. All contours are plotted on a plane that intersects the center of the inlet. Areas that are shaded red represent velocity magnitudes that are five times the average or greater.

It can be seen from Figure 30 that the jet created by the use of a sharp inlet induces significant amounts of flow separation and unused tank volume. For the base case velocities within the jet become as high as 40 times the average tank velocity, causing it to quickly cut through the tank volume, hit the back wall, and rapidly spread towards the outlet. Using a sharp inlet causes flow to undercut the water column, leaving the majority of the tank unused. The RTD curve in Figure 9 displays this trend, as they break through almost instantaneously. Such significant short circuiting has been observed in other open tanks with sharp inlets (see e.g. Appendix F, specifically Section 5.3 on page 71 in Flow Dynamics and Scalar Transport in Drinking Water Contact Tanks and Appendix C, specifically Section 3.2.3 on pages 58 in Evaluation of Flow and Scalar Transport Characteristics of Small Public Drinking Water Disinfection Systems using Computational Fluid Dynamics found in).

The introduction of baffles into the tank mitigates some of the severe short circuiting by forcing the flow through a number of channels, but the presence of a high velocity jet is enough to induce short circuiting and significant flow separation in several channels. For the one baffle case (see Figure 31) the velocity distribution within the second channel is still significantly skewed and non-uniform. The resulting baffling factor is around twice that of the base case, but it is still less than 0.10 and the resulting curve breaks through quickly. For the two baffle case (see Figure 32) the velocity field approaches uniformity only in the last channel and the first two channels still contain significant amounts of short circuiting. Flow separation at the first baffle turn is also quite significant. The use of a sharp inlet significantly detracts from the use of internal baffling. Tanks using weir inlets (see Appendix G, specifically Section 3.6 on page 52 in Towards Improved Understanding and Optimization of the Internal Hydraulics of Chlorine Contact Tanks) show significantly larger gains in efficiency from the use of long baffles than the present case simply because they have more favorable inlet conditions. Results suggest that modifying the inlet and the baffle turns could potentially increase the performance of the tested systems.

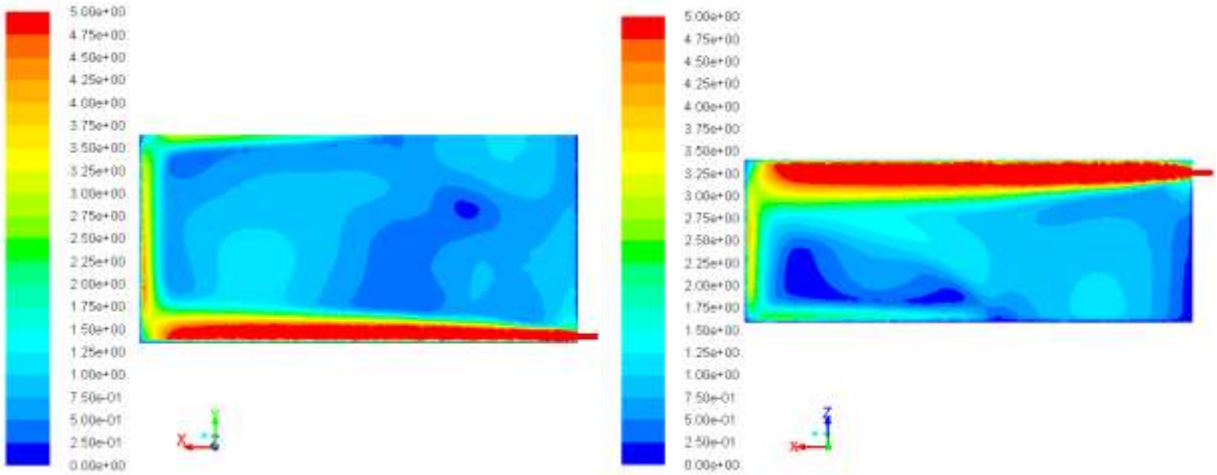

Figure 30: CFD Velocity Field: Base Case ($BF = 0.05$) (Section View Left, Plan View Right)

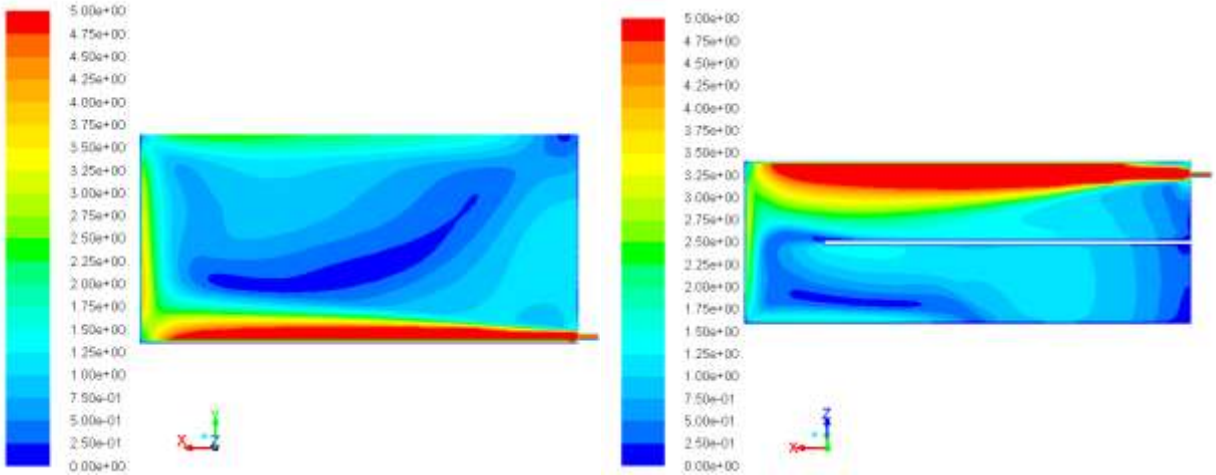

Plan View

Figure 31: CFD Velocity Field: Alternate Case I: One Baffle ($BF = 0.09$) (Views same as above)

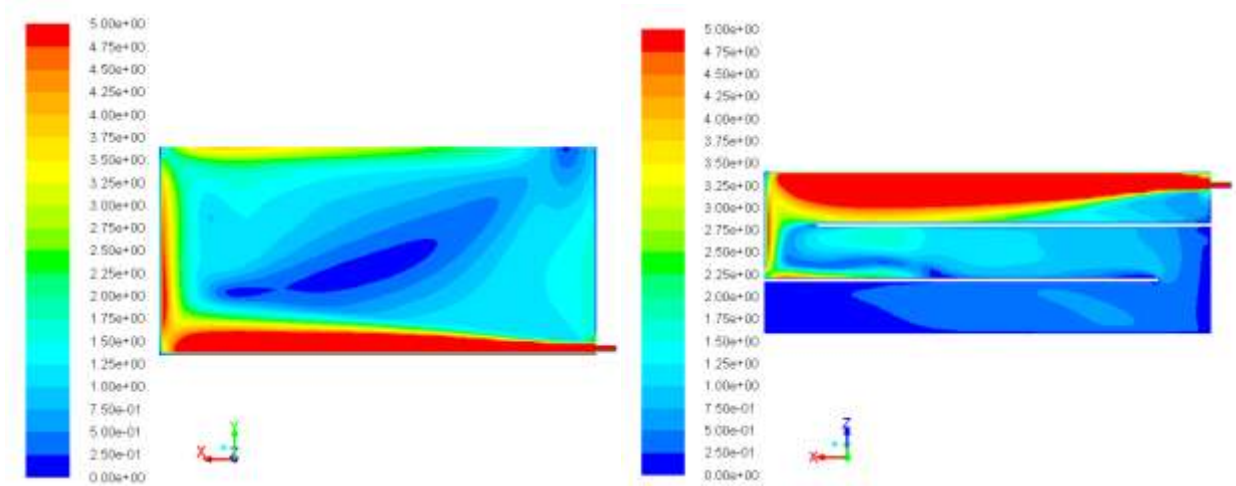

Figure 32: CFD Velocity Field: Alternate Case II: Two Baffles ($BF = 0.34$) (Views same as above)

E.5 Inlet Box Study

Based off of the velocity fields displayed in Figures 30-32, a parametric study was conducted in order to determine the befits of placing a box of random packing material at the tank inlet. Box dimensions were varied in order to determine an optimal design for dispersing the resulting jet caused by a sharp inlet. Investigated dimensions include box length (L_B) and box height(H_B). For all tested configurations the box width (W_B) was set at the width of the tank (four feet). A three dimensional schematic of a typical inlet box can be seen in Figure and photographs of several tested boxes can be seen in

Figure **34**. Each investigated box will be described in this appendix by using the notation $H_B \times L_B$ where both dimensions are in feet. A list of tested

Table 13: Inlet Box Study Results

Configuration	Flow Rate	Baffle Factor
Base Case	20 GPM	0.05
1ft X 1ft	10 GPM	0.19
	20 GPM	0.21
	40 GPM	0.24
1ft X 2ft	10 GPM	0.21
	20 GPM	0.30
	40 GPM	0.34
1ft X 4ft	10 GPM	0.26
	20 GPM	0.33
	40 GPM	0.36
2ft X 1ft	10 GPM	0.25
	20 GPM	0.25
	40 GPM	0.28
2ft X 2ft	10 GPM	0.22
	20 GPM	0.28
	40 GPM	0.15

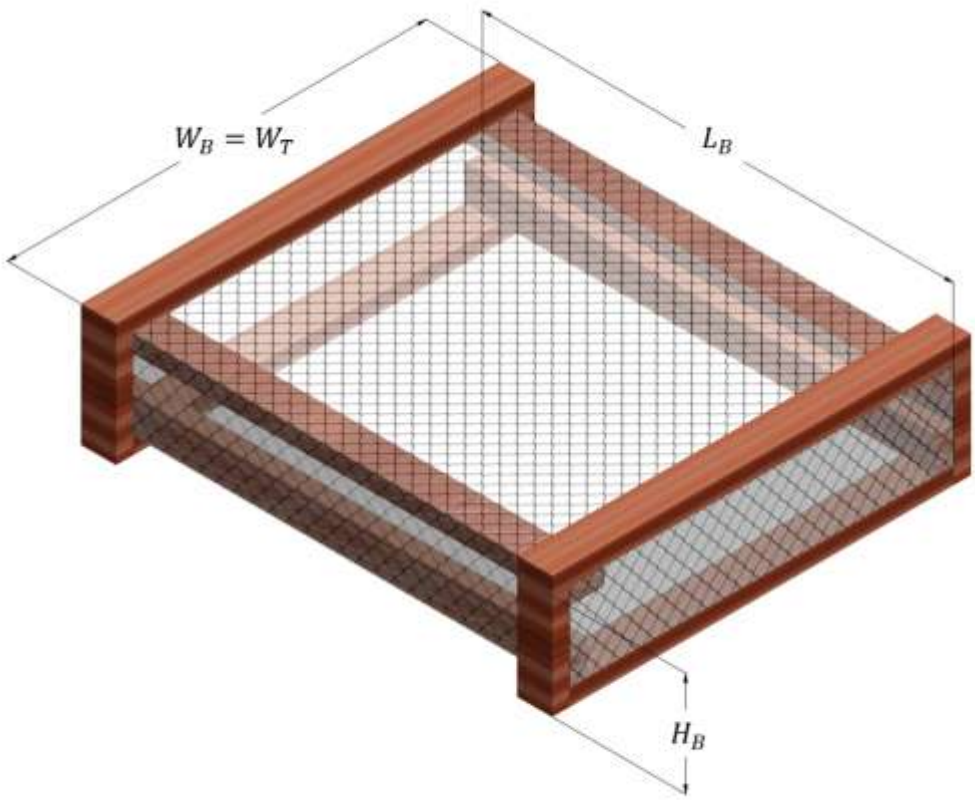

Figure 33: Generalized Inlet Box

scenarios and their corresponding baffling factors are listed in Table 13.

Figure 34: Inlet Box Prototype Examples (From Left to Right: 1ft X 2ft, 1ft X 4ft, 2ft X 2ft)

Each box was tested at flow rates of 10, 20, and 40 GPM using the methods described in section E.3 of this appendix. Sodium chloride was used almost exclusively as a tracing agent, but lithium chloride was used for the 1ft X 2ft box case in order to validate the applied methodology. Results of this validation case can be seen in Figure 11.

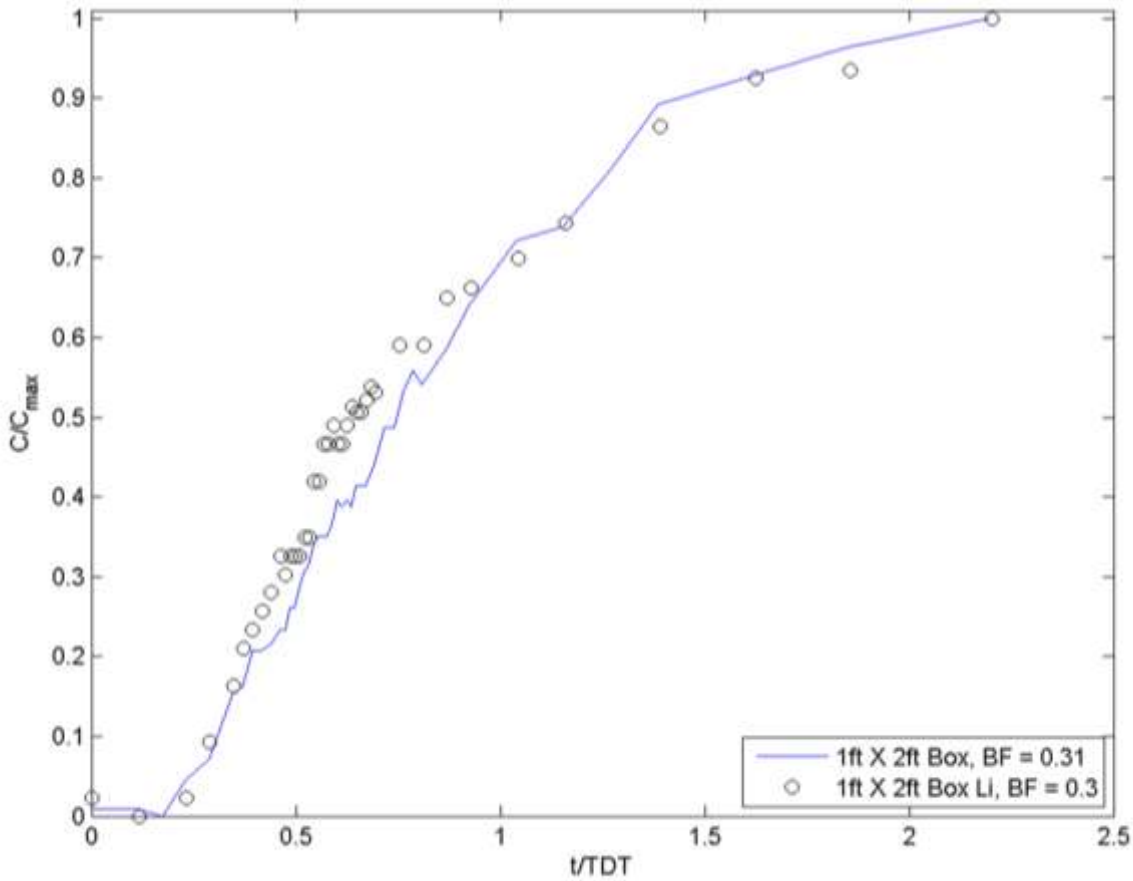

Figure 115: Lithium Validation for 1ft X 2ft Box at 20GPM

Table 13 highlights several key concepts. First, possible gains in hydraulic disinfection efficiency with only the use of an inlet box are limited. BF values do not exceed 0.40 regardless of parameter manipulation. Also, the BF appears to decrease with the box length and with flow rate. Since L_B is located parallel to the predominant trajectory of the jet, it is expected that increasing L_B will allow for more effective dissipation. This trend can be observed, but asymptotic behavior in measured BF values suggests that only a finite amount of dissipation can occur and that beyond a certain point increasing L_B yields little additional gain (there is a threshold). As the flow rate decreases the measured baffling factor also decreases. The greatest decrease occurs between the flow rates of 10 GPM and 20 GPM. As the flow rate drops the amount of energy contained in the turbulent jet decreases. For flow rates below 20 GPM it appears that the jet does not contain enough energy to be effectively dissipated (it will not be as dispersed). Benefits diminish as the flow approaches the laminar flow regime. The height H_B appears to have little effect on the BF of the system.
Figure **12**6 - Figure 137 provide examples of parameter effects.

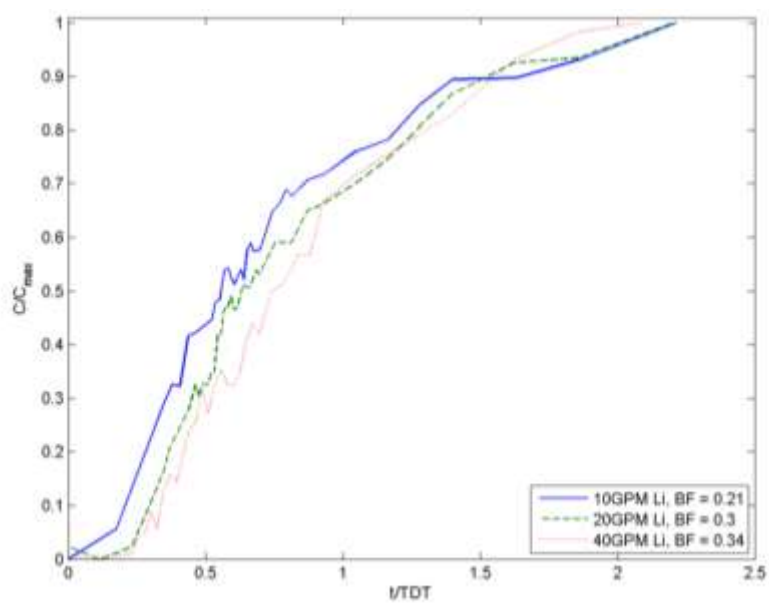

Figure 126: Effect of Flow Rate on 1ft X 2ft Box

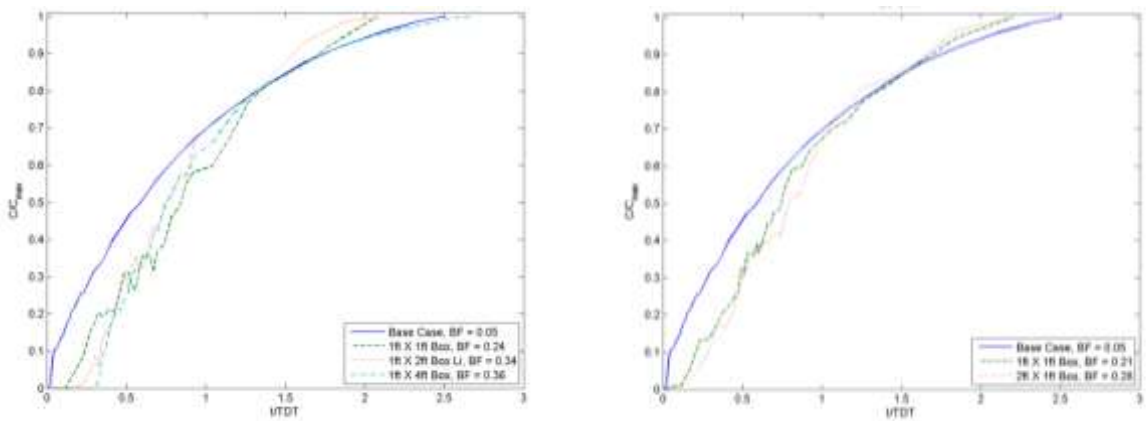

Figure 137: Effect of L_B at 40 GPM (Left) and Effect of H_B at 20 GPM (Right)

E.6 Turn Box Study

Work presented in section E.5 showed that the application of random packing material as an inlet diffuser could increase the baffling factor of the studied tank by around 620%, but this still leaves the BF at a lower value of 0.36. With this in mind an additional set of physical tracer studies was conducted in order to investigate the application of random packing material within a baffled system. Studies considered the placement of random packing material at areas of high velocity and flow separation (at the inlet and at baffle turns). The previously validated system containing two baffles was used as a modified case study. Based off of results from section E.5, a 1ft X 4ft box was placed at the inlet of the baffled tank. After this situation was fully analyzed, boxes were constructed and placed over the entire opening of each baffle turn. Images of each physical set up can be seen in Figure 148. Results indicated that the attempted modifications were significantly beneficial, but only for flow rates above a certain minimum threshold.

Figure 148: Inlet Box and Turn Boxes within Baffled System

Results from the study can be seen in Figure 39. Applying an inlet box and turn boxes within the baffled system at 20 GPM yields a baffling factor of 0.55, which is 10 times greater than the initial baffling factor. However, the observed gains are significantly sensitive to flow rate. Figure 40 and 41 show the effect of flow rate on the baffling factor of the full setup. As the flow rate decreases the flow at the inlet approaches the laminar-turbulent transition regime and the energy of the flow decays. Beneath 20 GPM the observed benefits of the baffle turns diminish and the BF drops to around 0.40. It is possible that at a flow rate of 10 GPM the amount of energy in the sharp inlet jet is not sufficient to productively overcome the resistance of the packing material. At this point the packing material may even induce additional separation and reduce effective flow area. The use of industrial packing material in open surface concrete tanks can significantly increase hydraulic mixing efficiency, but it must be applied under the correct conditions.

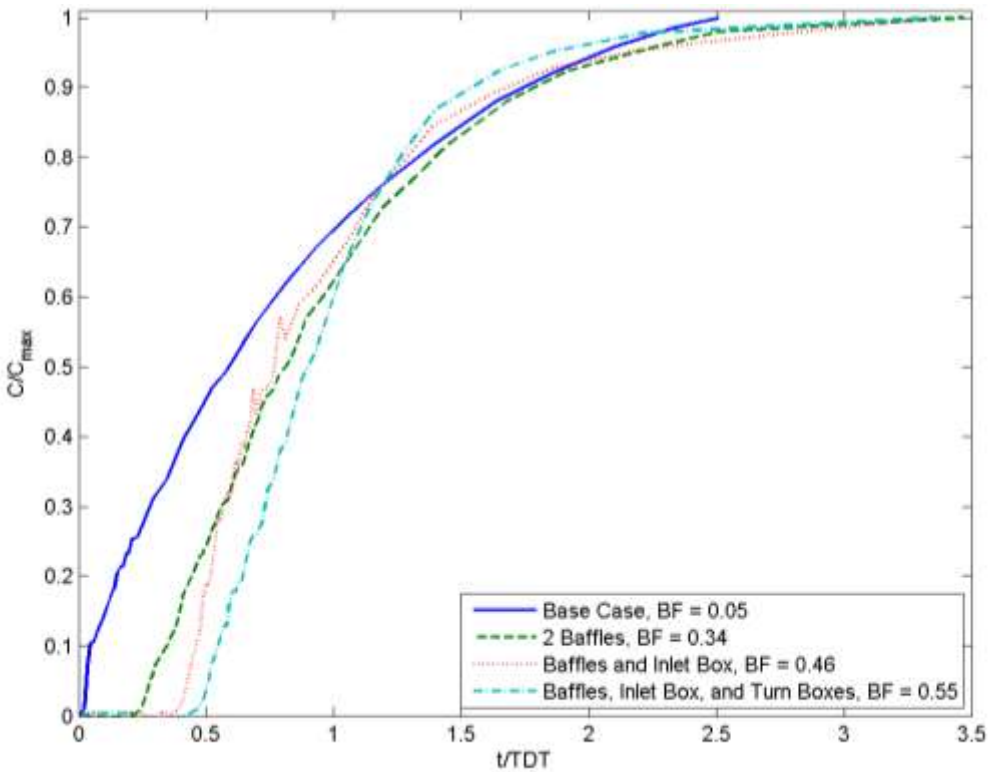

Figure 39: Turn Box Study Results at 20GPM

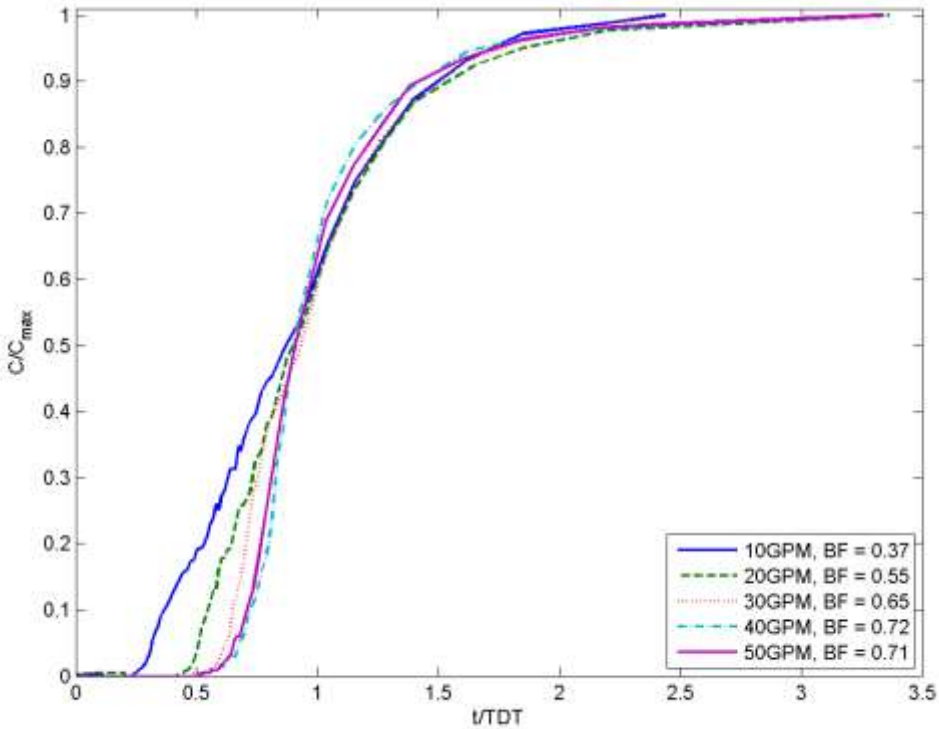

Figure 40: Effect of Flow Rate on Turn Box Setup

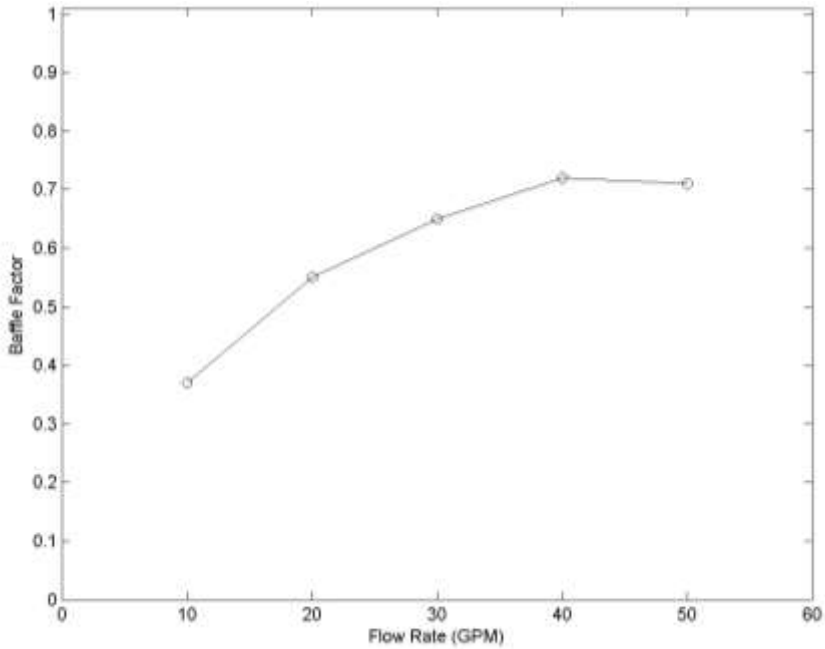

Figure 41: Flow Rate vs. Baffling factor for Turn Box System

APPENDIX F Flow Dynamics and Scalar Transport

Flow Dynamics and Scalar Transport in Drinking Water Contact Tanks

MS Thesis by Taylor C. Barnett (2013), Department of Civil and Environmental Engineering, Colorado State University

Advisor – Professor Karan Venayagamoorthy

The research and studies presented in this thesis focus on ways to improve the internal hydraulics of chlorine contact tanks used in drinking water disinfection systems. This was accomplished through the use of computational fluid dynamics (CFD) and physical tracer studies of a number of different systems. Three primary tank modifications were investigated in these studies: internal baffling; inlet modifications; and random packing material. The findings from these studies were then applied in a case study of the Jamestown chlorine contact tank. A concrete tank was installed in the Hydraulics Laboratory of Colorado State University and used as the footprint for a parametric study in which the number and length of internal baffles were modeled in various configurations. The resulting tank geometry from these two relationships yielded a BF of 0.80 and also maximized the length to width ratio of each channel within the concrete tank.

The inlet modification study was performed to investigate how the BF of a 400-gallon doorway storage tank could be improved. Three different inlet types with two inlet sizes were modeled and simulated for six different flow rates. Key findings from this study show that the size of the inlet and its orientation play a dominant role in the internal hydraulics of the system. For the random packing material study, three different packing material sizes, two tank sizes, and two different flow rates were tested. Key findings show that the initial BF of the system and the volume of the tank filled with the packing material were the dominant variables in the study. The tank size, flow rate, and packing material size had little to no impact on the performance.

Link

APPENDIX G – Towards Improved Understanding and Optimization of Internal Hydraulics

Towards Improved Understanding and Optimization of the Internal Hydraulics of Chlorine Contact Tanks

MS Thesis by Zachary H. Taylor (2012), Department of Civil and Environmental Engineering, Colorado State University

Advisor – Professor Karan Venayagamoorthy

The research presented in this thesis focuses on utilizing computational fluid dynamics (CFD) to further the understanding of the internal flow dynamics in chlorine contact tanks. In particular, we aim to address the following two critical questions: (1) for a given footprint of a serpentine chlorine contact tank with a fixed inlet configuration, how does the hydraulic efficiency of the tank depend on the configuration of internal baffles, and (2) for water storage tanks modified for use as chlorine contact tanks, can inlet conditions be modified such that near plug flow conditions are induced close to the inlet and throughout the rest of the tank?

For the serpentine baffle tanks, a benchmark contact tank geometry based on a scaled model of the Embsay chlorine contact tank in Yorkshire, England was used for validation and then subsequently modified by varying both the number and length of baffles. We found that the most efficient tank had a BF of 0.71, and that hydraulic efficiency was optimized in this tank by maximizing the length to width ratio in baffle chambers and by minimizing flow separation through the tank, which was achieved by setting equal dimensions to the inlet width, channel width, and baffle opening length.

In the study of inlet modifications for cylindrical storage tanks, inlet diffusers and inlet manifolds were developed and modeled. Experimental flow through curves (FTCs) of a benchmark storage tank (used as a contact tank), were used to validate the CFD model that was utilized in the study. Thirty-seven modified inlet configurations using two representative flow rates were modeled. The inlet manifolds improved the BF significantly, whereas the inlet diffuser had insignificant effects. The inlet manifold designed with 16 inlets with the inlet height set at 10 percent of the tank height improved the *BF* of the storage tank from 0.16 to 0.51.

Link

APPENDIX H Random Packing Material

H.1: Improving Drinking Contact Tank Hydraulics Using Random Packing Material

NOTE: This article is available for purchase from American Water Works Association. To purchase the article please visit http://dx.doi.org/10.5942/jawwa.2014.106.0005. The abstract to the article is shown below.

This study investigated the use of industrial packing material for increasing the hydraulic efficiency of small-scale drinking water chlorine contact tanks. Packing material used in this study was spherical with porosities between 0.9 and 0.95, and a density less than water. It should be noted that the void ratios has been dropped to down to 0.8 in Section 7 of the guidance document to allow for less porous packing material than those tested in this study to be used. To be conservative (in response to this relaxation in void ratios), the baffling factors shown in Table 8 in Section 7 have been assigned conservatively. Sixty-seven tracer studies were conducted on laboratory scale chlorine contact tank systems exploring three sizes of packing material, two tank sizes, and two flow rates. Sodium chloride solution was injected as a continuous tracer at the inlet and monitored in the tank outflow through electrical conductivity. Several studies were validated with the use and direct measurement of a lithium ion tracer. Hydraulic efficiency was measured by determining the baffling factor as outlined by the US Environmental Protection Agency (USEPA). Results suggest the utilization of packing material in small drinking water contact tanks can significantly increase the baffling factor, thus improving the disinfection efficiency obtained from the existing tanks.

H.2: Formula for Determining Effective Tank Volume

$$V_{eff} = BF \times \left(V_{tank} - (1 - \text{porosity}) \times V_{packing}\right),$$

where:

V_{eff} = effective tank volume (%)
BF = system baffling factor
V_{tank} = volume of tank without packing material (gallons)
$V_{packing}$ = volume of packing material to be used (gallons)
porosity = the porosity (or void fraction) specified by the manufacture

APPENDIX I Tracer Studies

The Department and CSU have jointly developed a tracer test protocol to be used as an example for water systems to conduct tracer testing. The link below contains the example test protocol. Tracer testing may be necessary to expand plant capacity, justify a current baffling factor, or to better understand your process at a water plant. The Department relies heavily on the guidance published by the USEPA for performing tracer studies. The document is titled, "Guidance Manual for Compliance with the Filtration and Disinfection Requirements for Public Water Systems using Surface Water sources (1991)". Tracer testing is covered in Appendix C. The exception is that the Department will allow the water system to test at two flow rates: >90% of peak flowrate and near 50% peak flowrate.

Link to Tracer Protocol

As part of the overall scope of work, CSU conducted two full scale tracer studies at public water systems. The results of these tracer studies are presented in the documents below.

Link to CSU Tracer Study, Jamestown

Link to CSU Tracer Study, TVW Water System