TTG TST
CONSULTING ENGINEERS

GREATROCK NORTH WATER AND SANITATION DISTRICT
ENGINEER'S REPORT
March 21, 2014

EDOP Compliance

The first round of quarterly testing has been completed for Alluvial Well No. 1, Alluvial Well No. 2, South Evaporation Pond, and North Evaporation Pond. The results are presented in the attached EDOP Compliance Monitoring sheets (2 pages).

Cla-Val Units at Pump Stations

iSiWest, Inc. has provided the attached proposal to complete an inventory and perform field maintenance for five pump control valves at the District's pump stations. The total estimated cost for these services is $3,650.00, an average of $730.00 per valve.

Rocking Horse Farms Tank Reminting

The District is awaiting the signed agreements from the selected contractor, Coblaco Services, Inc. Upon receipt of the requested documents, TST will contact Coblaco regarding a pre-construction meeting and determine a schedule for the work.

Box Elder Creek Ranch Pump Station

The pump station improvements were placed into service on March 13, 2014. TST has requested final O&M materials and equipment data for the District's inventory and maintenance management program.

Fire Hydrant Maintenance and Repairs

Attached is an updated summary of the fire hydrants observed in the Box Elder Creek Ranch and the Greatrock North subdivisions. I have asked John Wyckoff and Jeff Rabas to add additional hydrants to the list and return to me. Upon receipt, I will solicit cost quotations for corrections.

Pump Station Fire Pumps

I have verified the fire pump installations at Box Elder Creek Ranch and Rocking Horse Farms are the same, so a 75 horsepower redundant fire pump/motor configuration could be maintained within the District for quick installation. As noted last month, a redundant fire pump configuration can be procured for approximately $10,000. Typical lead time for the equipment is three to six weeks.

As for the Greatrock North fire pump, the data recorded in the Antero software indicates the four-stage Model 12RJLC Goulds pump operating at 65 psi should result in flows between 670 gpm and 1220 gpm, depending upon the impeller diameter. However, the impeller diameter is not identified is the inventory. TST is researching the expected flows, as well as the lead times for replacement equipment.

Relocation of Water Meters in Rocking Horse Farms

As noted in the most recent Action Items matrix, TST and REC are to review and complete the inventory of curb stops prior to soliciting bids. Landscaping impacts will need to be discussed with the Board.

Concentrate Disposal and Stream Reclassification

I have left a message with Bret Icenogle, of the WQCD's Engineering Section, regarding the history of the looping project, its impact on our water treatment operations, and our desire to pursue a stream reclassification. I will meet with Bret to review the correspondence trail, representation of the verbal authorization to construct the improvements, and our current situation.

Other Activities

Blending to Improve Water Quality: On November 11, 2013 TLECC modified the programming code to allow the RO run time to be operator defined. The timer now ranges from 0 to 1,440 minutes (24 hours) and is currently set at 240 minutes (4 hours) – up from the 30 minutes previously established. Ramey Environmental Compliance sampled for total dissolved solids at each tank site in January and March to determine the impact of this change in operation. Below are results:

	March 5, 2014	January 8, 2014	October 28, 2013
Box Elder Creek Ranch	586 mg/l TDS	553 mg/l TDS	677 mg/l TDS
Rocking Horse Farms	543 mg/l TDS	559 mg/l TDS	643 mg/l TDS
Greatrock North	566 mg/l TDS	575 mg/l TDS	594 mg/l TDS

Utility Billings and Energy Costs: TST has initiated tracking of the United Power utility bills and associated water operations. Year-to-date information for usage and billings for the last three years is presented in the attached summary. Furthermore, information associated with water operations and energy usage/billings per 1,000 gallons of water is also presented.

			2013		2014				2015				2016	
			QTR 3	QTR 4	QTR 1	QTR 2	QTR 3	QTR 4	QTR 1	QTR 2	QTR 3	QTR 4	QTR 1	QTR 2
						ALV-1								
Parameter	Unit	120206 Baseline				140311 Results								
Sodium	mg/L	93				113.6								
Calcium	mg/L	97				131.5								
Magnesium	mg/L	17				23.3								
Iron	mg/L	0.007				0.012								
Chloride	mg/L	120				193.7								
Sulfate	mg/L	133				207.54								
Alkalinity	mg/L	162				170.1								
TDS	mg/L	659				856								
Total Hardness (as CaCO3)	mg/L	309				424.2								
pH	s.u.	6.95				7.58								
Fluoride	mg/L	0.68				0.83								
						ALV-2								
Parameter	Unit	120206 Baseline				140311 Results								
Sodium	mg/L	99				115.3								
Calcium	mg/L	126				151.9								
Magnesium	mg/L	25				30.1								
Iron	mg/L	0.013				0.005								
Chloride	mg/L	102				118.35								
Sulfate	mg/L	237				310.15								
Alkalinity	mg/L	198				255.7								
TDS	mg/L	816				958								
Total Hardness (as CaCO3)	mg/L	412				503.3								
pH	s.u.	7.39				7.78								
Fluoride	mg/L	0.61				0.77								

			2013		2014				2015				2016	
			QTR 3	QTR 4	QTR 1	QTR 2	QTR 3	QTR 4	QTR 1	QTR 2	QTR 3	QTR 4	QTR 1	QTR 2
						South Pond								
		120310				140305								
Parameter	Unit	Baseline				Results								
Sodium	mg/L	1412				1075.0								
Calcium	mg/L	425				118.1								
Magnesium	mg/L	19				125.2								
Iron	mg/L	0.1				0.016								
Chloride	mg/L	1200				955.92								
Sulfate	mg/L	1625				1210.67								
Alkalinity	mg/L	1025				366.0								
TDS	mg/L	5707				4021								
Total Hardness (as CaCO3)	mg/L	1142				810.1								
pH	s.u.	8.89				9.43								
Fluoride	mg/L	-				2.51								
						North Pond								
						140305								
Parameter	Unit	Baseline				Results								
Sodium	mg/L					727.5								
Calcium	mg/L					157.2								
Magnesium	mg/L					134.3								
Iron	mg/L					0.849								
Chloride	mg/L					854.97								
Sulfate	mg/L					1135.43								
Alkalinity	mg/L					187.5								
TDS	mg/L					3392								
Total Hardness (as CaCO3)	mg/L					945.2								
pH	s.u.					9.21								
Fluoride	mg/L					2.07								

isiWEST
WATER AND WASTEWATER TREATMENT, TRANSFER AND CONTROL EQUIPMENT
4175 Mulligan Dr. | Longmont CO, 80504 | Phone: 970.535.0571 | www.isiwest.com

March 14, 2014

TST Engineers
Attn: Bradley Simons, P.E.
9222 Teddy Lane
Lone Tree, CO 80124

RE: Great Rock North Water and Sanitation District

Dear Mr. Simons:

isiWest, Inc. is pleased to provide you with this Scope of Quotation for the Great Rock North Water and Sanitation District's Pump Station Control Valve Maintenance and Inventory Report. We understand that the Great Rock North Water and Sanitation District (DISTRICT) requests a completed inventory and field maintenance for five control valve locations.

isiWest Scope of Quotation includes the following services:

- Verify and complete inventory of control valves in the systems
- Identify valves current working status
- Field maintenance to rebuild valves and control pilots and adjustments as necessary
- Prepare Summary report to include the following:
    - Certification Data Form
    - Summary page of each valve to include picture, location of valve, summary of valve upon visit, what want valve to do, what its doing now, maintenance performed, and recommendations for future service and/or parts to meet desired system requirements.

The budgetary scope and price we've prepared includes complete rebuild with repair kits for main valves and pilot controls, estimated time to complete site visit, inventory, inspection, and minor field adjustments. In addition, the budgetary price includes the completed Summary Report.

We anticipate that all five (5) valves can be inventoried, inspected, and field maintenance complete in approximately two days, or 16 hours, and another 4-6 hours to complete the summary report. The Summary Report will be submitted to District within seven to ten (7 -10) days after completing valve inventory and field maintenance. An example of the Summary Report is attached as **Exhibit A**.

Additional or supplementary services beyond the Scope of Quotation provided here, shall be performed only upon mutual agreement between the District and isiWest. Additional recommendations for parts, repairs or maintenance will be included in the Summary Report.

Compensation for the above scope of services will be based on a time and expense reimbursement with an estimated fee of **$3,650.** Prices are good for 30 days from quote date. isiWEST Terms and Conditions apply and are attached as **Exhibit B**. Our estimated price quote for parts, field service and summary report is outlined by location below:

Box Elder Creek Ranch Pump Station

Hytrol Valve			
3" 100-01 Repair Kit	p/n 9169813E	$ 110	
CRA Repair Kit	p/n 9170001D	$ 104	
½" CRL Repair Kit	p/n 9170007A	$ 89	
Field Inspection and Maintenance		$ 400	
		Estimated Total	$ 703

Rocking Horse Farms Pump Station

Surge Anticipator Valve			
6" 52-03 Repair Kit	p/n 9169815K	$ 226	
CRA Repair Kit	p/n 9170001D	$ 104	
½" CRL Repair Kit	p/n 9170007A	$ 89	
Field Inspection and Maintenance		$ 500	
		Estimated Total	$ 919

Greatrock North Pump Station (fire pump)

Pressure Reducing Valve			
6" 90-01 Repair Kit	p/n 9169815K	$ 226	
CRD Repair Kit	p/n 9170003K	$ 77	
Field Inspection and Maintenance		$ 500	
		Estimated Total	$ 803

Greatrock North Pump Station (Pump No. 2)

Pressure Reducing Valve			
4" 90-01 Repair Kit	p/n 9169813E	$ 161	
CRD Repair Kit	p/n 9170003K	$ 77	
Field Inspection and Maintenance		$ 400	
		Estimated Total	$ 638

Greatrock North Pump Station (Pump No. 1)

Pressure Reducing Valve			
3" 90-01 Repair Kit	p/n 9169812G	$ 110	
CRD Repair Kit	p/n 9170003K	$ 77	
Field Inspection and Maintenance		$ 400	
		Estimated Total	$ 587

Coordination with the District will ensure that proposed work is completed timely and within budget. isiWest requests an approximate scheduling lead time of *two weeks*. We request that the operator verify that the main globe valve can be evacuated of water prior to our visit. Our service technician, Avery Kepple, will meet with District staff to complete the inventory and field maintenance as outlined above.

We thank you for the opportunity to provide you with the services your District needs to keep your Cla-Val control valves in good working condition. If this Quotation is acceptable to you, please sign original copy where indicated below in Terms and Conditions, keep one original copy for your records and return one complete original copy to isiWest. Should you have any questions please contact me at (970) 535-0571.

Sincerely,
Anita Hardy

Anita Hardy

isiWEST
WATER AND WASTEWATER TREATMENT, TRANSFER AND CONTROL EQUIPMENT
4175 Mulligan Dr. | Longmont CO, 80504 | Phone: 970.535.0571 | www.isiwest.com

EXHIBIT A
SAMPLE SUMMARY REPORT

isiWEST
WATER AND WASTEWATER TREATMENT, TRANSFER AND CONTROL EQUIPMENT
4175 Mulligan Dr. | Longmont CO, 80504 | Phone: 970.535.0571 | www.isiwest.com

Equipment SUMMARY REPORT
Prepared for: GREAT ROCK NORTH WATER AND SANITATION DISTRICT
Field Visit Date: _____

On March 1, 2010, isiWest performed a field inspection of five separate control valves for the Great Rock North Water and Sanitation District. (Include brief summary of System location and requirements).

VALVE 1 – LOCATION

Certification Data Sheet # 1

Valve History/Current Status

The Pressure Control Valve located at _____ provides _____ _____ to the system…. This valve was installed….

Upon initial inspection, we noted….

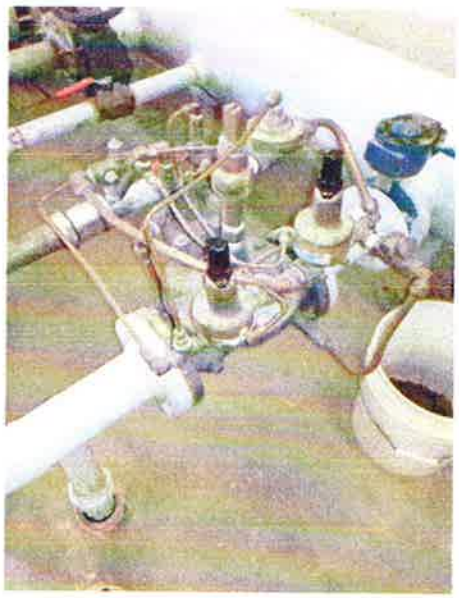

Maintenance Performed

During our visit, we performed the following…. and discussed…..

(Rebuild of main valve (p/n), pilot rebuild, adjustments,) Discuss issues with maintenance if necessary)* (If no pressure gauges are available, isiWest will verify that the control pilot is set appropriately).

Recommendations

We recommend that valves be maintained/rebuilt at the following intervals:
We would recommend the following items:

Potential Future Costs in one year and five years

VALVE 2 – LOCATION

Repeat for all valves/equipment in scope

Certification Data

Valve Catalog No._____ Quantity_____
Description _____

Company_____ Date_____ Job Number _____
Contact _____ Job Name _____
Address _____ Engineering Firm _____

CONTROL VALVE SPECIFICATIONS

Valve Pattern	Rubber Parts	Epoxy Coating Fusion Bonded
☐ Globe ☐ Angle	☐ Buna N® Synthetic Rubber	☐ Internal & External
Main Valve Body & Cover	☐ Temp. Range 180°	**End Details Flanged**
☐ Ductile Iron ASTM A-536	☐	☐ Ductile Iron ANSI B16.42 150A
☐ Steel ASTM A216-WCB	**Tubing & Fittings**	☐ Ductile Iron ANSI B16.42 300F
☐	☐ Copper & Brass	☐
Main Valve Trim	☐ Stainless Steel	☐ F– Supplied Per Spec.
☐ Bronze ASTM B61	**Features**	☐ A– Supplied Per Spec. Flat Faced
☐ Stainless Steel	☐ Strainer ☐ Check Feature	**End Details Screwed**
Pilots and Solenoids	☐ Pilot System Shutoff Cocks	☐ 250 & 300 ANSI B2.1
☐	☐ Opening Speed Control	**Pressure Ratings**
☐	☐ Closing Speed Control	☐ 150 Class @ 250 psi Max
☐	☐ Delrin Sleeve Stem (Main Valve)	☐ 250 Class @ 300 psi Max
Pilot Systems Materials	☐ Micro Switch Assembly	☐ 300 Class @ 400 psi Max
☐ Bronze/Stainless Steel	☐ Valve Position Indicator	
☐ Stainless Steel	☐	

Special Notes:

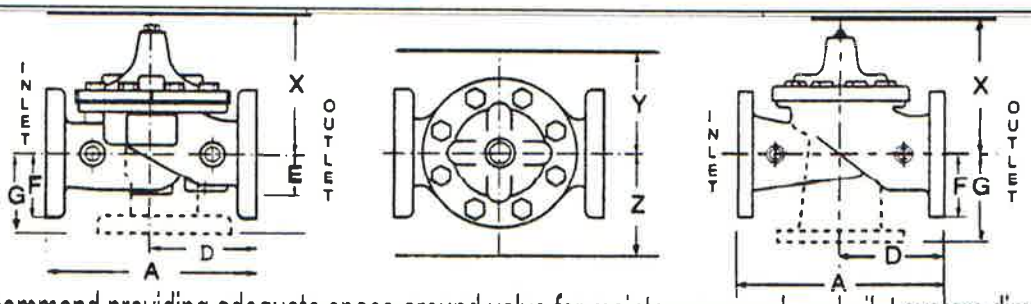

We recommend providing adequate space around valve for maintenance work and pilot system dimensions.

Valve	Dimensions including pilot control systems								Specification Ref.
Size	A	D	E	F	G	X	Y	Z	

Certified by _____

isiWEST
WATER AND WASTEWATER TREATMENT, TRANSFER AND CONTROL EQUIPMENT
4175 Mulligan Dr. | Longmont CO, 80504 | Phone: 970.535.0571 | www.isiwest.com

EXHIBIT B
TERMS AND CONDITIONS

isiWEST
Water and Wastewater Treatment, Transfer and Control Equipment
4175 Mulligan Dr. | Longmont CO, 80504 | Phone: 970.535.0571 | www.isiwest.com

EXHIBIT "A"

INSTRUMENT & SUPPLY, INC. - TERMS AND CONDITIONS OF SALE

1. **ACCEPTANCE** - This proposal is submitted to Purchaser subject to the terms and conditions hereinafter set forth. There are no agreements or representations, verbal or otherwise, outside this proposal. Upon the acceptance hereof by Purchaser of this proposal, whether verbal or written, this proposal shall become a binding contract. In the event that purchaser submits its own purchase order in lieu of accepting this proposal in the method described above, (a) none of the terms of such purchase order which differ from or are in addition to the terms hereof, shall become a part of the contract and Seller specifically objects to such different or additional terms, and (b) the submission by Purchaser and the Seller as an unequivocal acceptance to this proposal and the terms, and a contract shall thereupon become effective.

2. **SHIPPING DATE** - The shipping date specified herein is approximate only. Seller recognizes the desirability of making delivery promptly. However, Seller shall not be responsible for any loss or damage resulting from any delay in delivery or failure to deliver the equipment (as used herein "equipment" refers to all equipment materials, accessories and/or parts which Seller proposes to sell hereunder) where such delay or failure is caused by fire, flood, natural causes, labor troubles (including strikes, slowdowns and lockouts), war, Government regulations, riots, civil disorders, interruption of or delay in transportation, power failure, inability to obtain materials and supplies, accidents, acts of God, or any other cause beyond Seller's control.

3. **PACKING** - Prices include packing for domestic truck shipments only.

4. **SHIPMENTS** - All prices are F.O.B. factory except where it is specifically stated that they are freight allowed. Where freight is allowed, the prices are F.O.B. point of shipment with freight prepaid (allowed) to nearest freight station in the United States (except Alaska, Hawaii, Canal Zone and Insular Possessions). The point of origin of shipment, the method of transportation and the routing of shipments are optional with seller. No allowance is made for transportation if Purchaser accepts delivery at factory or warehouse. If the Purchaser specifies on order "shipment collect", it should be clearly understood that there will be no credit allowance made for freight.

At the Purchaser's request, shipment may be made by air, railroad express, rail and/or water freight, in lieu of truck. In such case, any additional expense incurred will be billed to the Purchaser. If shipment is accepted by the Purchaser at one destination and re-forwarded to him, the re-forwarding is at the Purchaser's expense.

5. **PRICES** - Unless otherwise specified by Seller, prices set forth herein are firm, provided within thirty (3) days after the date hereof, this proposal becomes a binding contract as hereinabove provided, and provided further that Purchaser furnishes Seller with all necessary drawings duly approved by the Purchaser within thirty (30) days after submission of drawings to the Purchaser by Seller. Where shipment is requested by Purchaser beyond the normal shipment schedule, or in the event that shipment is

deferred at the request of the Purchaser or by reason of Government action, Purchaser agrees to pay at Seller's option a delayed delivery storage fee at the rate of 2% of the equipment price per month beyond the normal shipping date.

6. **TAXES** - Prices specified herein do not include any federal, state or municipal sales, use, excise or other taxes. Therefore, in addition to the prices specified herein, the amount of any such sales, use, excise or other taxes applicable to the sale of the equipment shall be paid by Purchaser or in lieu thereof Purchaser shall furnish Seller with tax exception certificates acceptable to said taxing authorities.

7. **PAYMENTS** - Terms of payment are **NET 30 DAYS** from invoice date unless otherwise stated. All past due amounts are subject to a service charge at the maximum legal rate allowed by the State of Arkansas. If Purchaser's financial condition does not justify continuance of production or shipment

8. On the terms of payment - specified herein, Purchaser will, upon request by Seller, furnish further assurance of ability to make payments. Seller may also refuse to make shipment except upon payment of cash fully or partially in advance. Prorate payments shall become due and payable as partial shipments are made hereunder. In the event delay in making any partial shipment is caused by Purchaser, payment for such shipment shall be due on the date Seller notifies Purchaser that Seller is prepared to make such shipment.

Purchaser shall be responsible for the payment of all costs and expenses of collection of all payments due seller, including reasonable attorney's fees, whether or not a lawsuit are actually filed. In the event it should become necessary to file legal action for collection or interpretation of the terms of this agreement, Purchaser and Seller hereby agree that the jurisdiction and venue of any such action are proper in the courts of Garland County, State of Arkansas.

9. **TITLE** - The title to equipment specified herein, and to any and all additions and accessories thereto
And substitutions therefore, shall remain with seller until the purchase price thereof is paid in full.

10. **CANCELLATION** - When this proposal becomes a binding contract as hereinabove provided, the
Purchaser may cancel the same at any time prior to shipment, but only upon payments to seller of reasonable cancellation charges, which shall include expenses already incurred, the cost to seller of canceling it and Seller's anticipated profit.

11. **WARRANTY** - The original manufacturer warranty will apply on all new equipment and parts
Purchased from Seller. New equipment manufactured by Seller is warranty to be free from defects in material and workmanship under normal use and service for a period of one (1) year from the date of shipment; seller's obligation under this warranty being limited to repairing or replacing at its option any part found to its satisfaction to be so defective provided that such part is, upon request, returned to Seller's factory from which it was shipped, transportation prepaid. This warranty does not cover parts damaged by decomposition from chemical action or wear caused by abrasive materials, nor does it cover damage resulting from misuse, accident, neglect, or from Improper operation, maintenance, installation, modification or adjustment. This warranty does

not cover parts repaired outside seller's factory without prior written approval. Seller makes no warranty as to starting equipment, electrical apparatus or other material not of its manufacture, since the same are usually covered by warranties of the respective manufacturers thereof.

In the event, notwithstanding the terms of this agreement, it is determined by a court of competent jurisdiction that an express warranty has been given by Seller to Purchaser with respect to performance characteristics of said equipment, Seller's liability for breach of the same shall be limited to accepting return of such equipment F.O.B. plant of manufacture, refunding any amount paid thereon by Purchaser (less depreciation at the rate of 15% per year if Purchaser has used equipment for more than thirty (30) days) and canceling any balance still owing on equipment.

12. **COMPLIANCE WITH LAWS** - Purchaser shall be solely responsible for securing any necessary permits under and for compliance with all safety, health and sanitation laws, ordinances and regulations in connection with the installation and operation of the equipment. Purchaser agrees to provide Seller, upon request, with evidence of the securing of

any such permits and of compliance with any such laws, ordinances and regulations, although Seller may rely exclusively on Purchaser's representations, hereby made, that it shall secure permits and comply with such laws, ordinances and regulations.

13. **INDEMNIFICATION** - It is understood that Seller has relied upon data furnished by and on behalf of Purchaser with respect to the safety aspects of the equipment, and that is Purchaser's responsibility to assure that the equipment will, when installed and put in use, be in compliance with safety requirements fixed by law and otherwise legally adequate to

safeguard against injuries or damage to person or property. Purchaser hereby agrees to defend, indemnify and hold harmless Seller, its agents and employees against any and all losses, costs, damages claims, liabilities or expenses, including but not limited to reasonable attorney's fees, arising out of or resulting from any injury or damage to any person or property caused by the inadequacy of safety features, devices or characteristics in the equipment or in the installation, use or operation of the same, except claims for repair or replacement of defective parts as provided in Paragraph 10 hereof.

14. **RISK OF LOSS** - The risk of loss of or damage to the equipment is on Purchaser from and after delivery to Purchaser or to carrier from shipment to Purchaser.

15. DISCLAIMER OF CONSEQUENTIAL DAMAGES, LIQUIDATED DAMAGES OR PENALTIES
SELLER SHALL NOT BE LIABLE FOR CONSEQUENTIAL DAMAGES, LIQUIDATED DAMAGES OR PENALTIES WHETHER OR NOT CAUSED BY SELLER'S NEGLIGENCE. "CONSEQUENTIAL DAMAGES" FOR THE PURPOSE OF THIS AGREEMENT SHALL INCLUDE, BUT NOT BE LIMITED TO, LOSS OF USE, INCOME OR PROFIT, OR LOSS OR DAMAGE TO PROPERTY (INCLUDING, BUT WITHOUT LIMITATION, PRODUCTS MANUFACTURED, PROCESSED OR TRANSPORTED BY THE USE OF THE EQUIPMENT) OCCASIONED BY OR ARISING OUT OF THE OPERATION, USE, INSTALLATION, REPAIR OR REPLACEMENT OF THE EQUIPMENT OR OTHERWISE.

16. **GENERAL -**

(a) No modification hereof shall be binding upon Seller unless such modification is in writing signed by a duly authorized representative of Seller.

(b) If any part hereof is contrary to, prohibited by, or deemed invalid under applicable laws or regulations, such provision shall be inapplicable and deemed omitted to the extent so contrary, prohibited or invalid, but the remainder hereof shall not be invalidated thereby and shall be given effect so far as possible.

(c) The waiver of the breach of any obligation to be performed by either party hereunder shall not constitute a waiver of any other like or difference breach.

(d) The entire understanding between the parties hereto is as set forth herein and any promises, representations, warranties or guarantees not herein contained shall have no force and effect unless in writing, signed by Seller and Purchaser.

Accepted by: _____.

Company Name:_____.

Date:_____.

GNWSD - 2014 Fire Hydrant Evaluation

Subdivision: Box Elder Creek Ranch

Date	Location	Year Mfg	Working Pressure	Bury Depth	Nozzle Distance Above Groundline (inches)*		
					Left Hose Nozzle	Pumping Hose Nozzle	Right Hose Nozzle
140211	16545 Timber Cove	2000	250 psi	5'-6"	9.0	10.0	10.5
140211	16381 Timber Cove	2000	250 psi	5'-6"	11.0	11.0	10.5
140211	Timber Cove & Umpire Street	2000	250 psi	5'-6"	10.0	9.0	9.5
140211	16461 Tree Haven	2000	250 psi	5'-6"	12.0	10.5	10.5
140211	Tree Haven & Stroilway	2000	250 psi	5'-6"	8.5	8.5	9.0
140211	Tree Haven and Red Lane	2000	250 psi	5'-6"	12.0	11.0	11.0

Subdivision: Rocking Horse Farms

Date	Location	Year Mfg	Working Pressure	Bury Depth	Nozzle Distance Above Groundline (inches)*		
					Left Hose Nozzle	Pumping Hose Nozzle	Right Hose Nozzle

Subdivision: Greatrock North

Date	Location	Year Mfg	Working Pressure	Bury Depth	Nozzle Distance Above Groundline (inches)*		
					Left Hose Nozzle	Pumping Hose Nozzle	Right Hose Nozzle
140306	28925 East 160th Place	Per J. Wyckoff e-mail, this hydrant appears to have been hit and is leaning to the west.					

* Waterous recommends the nozzle elevation (centerline) above groundline be no less than 18 inches.

Usage (KWH)			
Facility	2012	2013	2014
Alluvial Wells	2970	2136	2341
Box Elder Creek Ranch	13520	13680	15360
Greatrock North	4200	5400	5440
Rocking Horse Farms	3960	17520	2400
Totals	24650	38736	25541

Billing Amount			
Facility	2012	2013	2014
Alluvial Wells	$547.88	$358.98	$277.72
Box Elder Creek Ranch	$1,651.60	$1,752.12	$1,108.54
Greatrock North	$467.45	$670.70	$435.45
Rocking Horse Farms	$372.28	$1,596.64	$226.87
Totals	$3,039.21	$4,351.44	$2,048.58

Water Operations (gallons)			
Facility	2012	2013	2014
Alluvial Wells			1,720,830
Box Elder Creek Ranch			2,144,122
Greatrock North			542,401
Rocking Horse Farms			443,608

Water Operations (KWH/1000 gallons)			
Facility	2012	2013	2014
Alluvial Wells			1.3604
Box Elder Creek Ranch			7.1638
Greatrock North			10.0295
Rocking Horse Farms			5.4102

Water Operations ($/1000 gallons)			
Facility	2012	2013	2014
Alluvial Wells			$0.1614
Box Elder Creek Ranch			$0.5170
Greatrock North			$0.8028
Rocking Horse Farms			$0.5114