SECTION 00905
ADDENDUM NO. 5

DATE:	June 1, 2016		
FROM:	FEI Engineers, Inc.	**PN/File**:	BENN-15-0176
TO:	ALL PLAN HOLDERS	**CC:**	D. Johnson, Public Works Director
SUBJECT:	ADDENDUM NO. 5 TO THE BIDDING DOCUMENTS FOR THE New Water Storage Tank Project Town of Bennett, Colorado		

PART 1 GENERAL

1.1 DESCRIPTION

A. This addendum forms a part of the Bidding and Contract Documents and clarifies, corrects or modifies the Project Manual and Drawings as described below.

B. This addendum consists of two (2) pages, one (1) Project Drawings and the following notes:

1.2 ACKNOWLEDGMENT

A. Acknowledge receipt of this addendum in the space provided on the Bid Form. Failure to do so may subject Bidder to disqualification.

PART 2 PROJECT MANUAL

2.1 DIVISION 15: MECHANICAL

A. Section 15100: Valves, Cocks and Hydrants
1. 2.2.S. Check Valves, Item, on page 14, add:

S. CHECK VALVES
1. Clear water service, 3 inches through 12 inches:
a. Location: Interior
b. Line Designation: HW, CW, NPW
c. Pressure, Min: 200 psig non shock CWP
d. Wafer style for installation between 2 150/250 lb ANSI pipe flanges
e. Cast Iron or Ductile Iron Body
f. Aluminum Bronze plates or Stainless Steel 316

©2016 FEI Engineers, Inc.

g. Seat: EPDM or NBR
h. 316 Stainless steel springs, hinge pins, and stops
i. Teflon spring and hinge bearings
j. Standard trim for IBBM construction
k. Manufacturer: Mission "Duo-Check, Fig. 12 HMP," Golf "Model MB", APCO "CDD", or accepted equal

2. Water, or other liquid service, 2-1/2 inches and smaller:
a. Location: Exposed
b. Line Designation: HW, CW, NPW
c. Pressure, Min.: 300 psig non shock CWP
d. Bronze regrinding horizontal swing check valves
e. Threaded end: Crane 36, Fairbanks 0605, Jenkins 762-A, Stockham B-345, or accepted equal
f. Soldered end: Crane 1342, Fairbanks 0680, Jenkins 1222, or Stockham B-309
1) May be used on 3 inch copper tubing

3. Water service: 3 inches and Larger:
a. Location: Interior
b. Line Designation: PW, DW, NPW
c. Pressure, Min.: 250 psi non shock CWP
d. Horizontal swing check with lever and spring back-flow device
e. Body
1) Ductile iron, ASTM A536
2) Integrally cast-on end flanges
f. Body seat ring
1) Stainless Steel, ASTM A743
g. Disc:
1) Ductile Iron ASTM A536
2) Designed to match body seat ring for drip tight closure
3) Travel angle from closed to full open: 90 degrees
4) Replaceable without removing valve from line
5) Operating temperature: -70 to 250 degrees F
h. Back-flow device
1) Manually operated lever with spring
2) Housing and handlebar: Steel, AISI-1018
3) Buffer rod: Brass, ASTM B16
i. Manufacturer: APCO CVS or accepted equal

PART 3 PROJECT PLANS

3.1 REVISIONS TO DRAWINGS; REMOVE AND REPLACE

A. Sheet No. 34 of 44: Water Storage Tank Plan & Elevation
1. Added Town logo on tank

END OF ADDENDUM NO. 5

©2016 FEI Engineers, Inc.

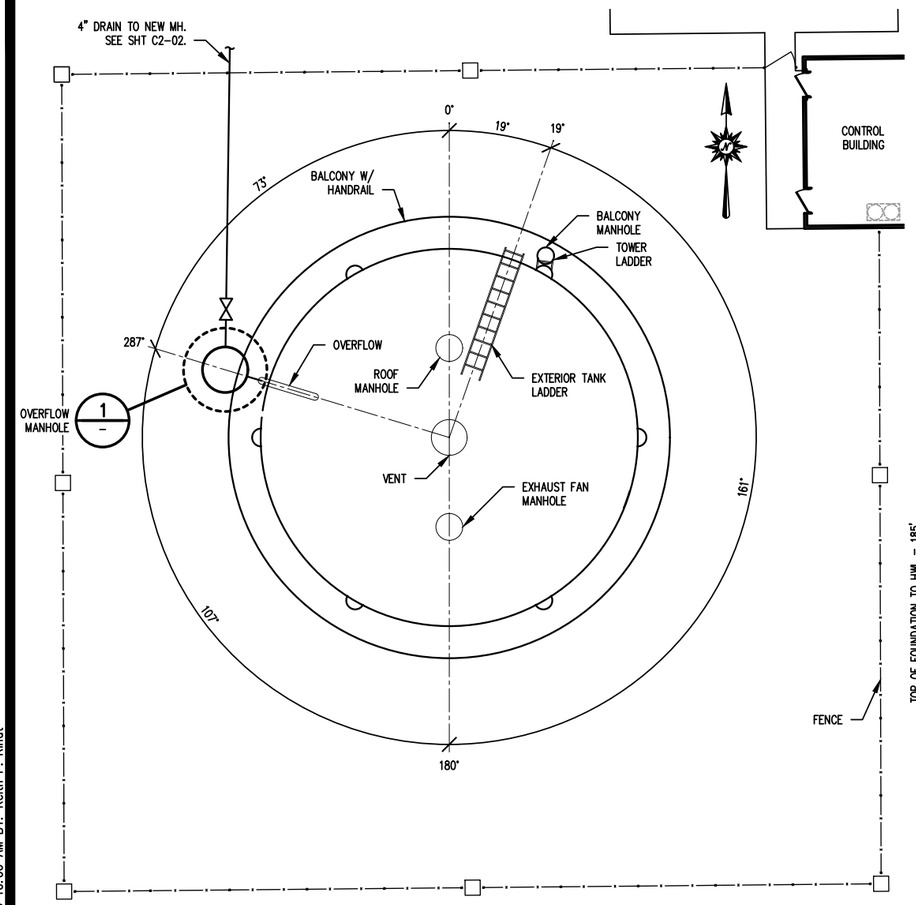

TANK PLAN
1"=20'

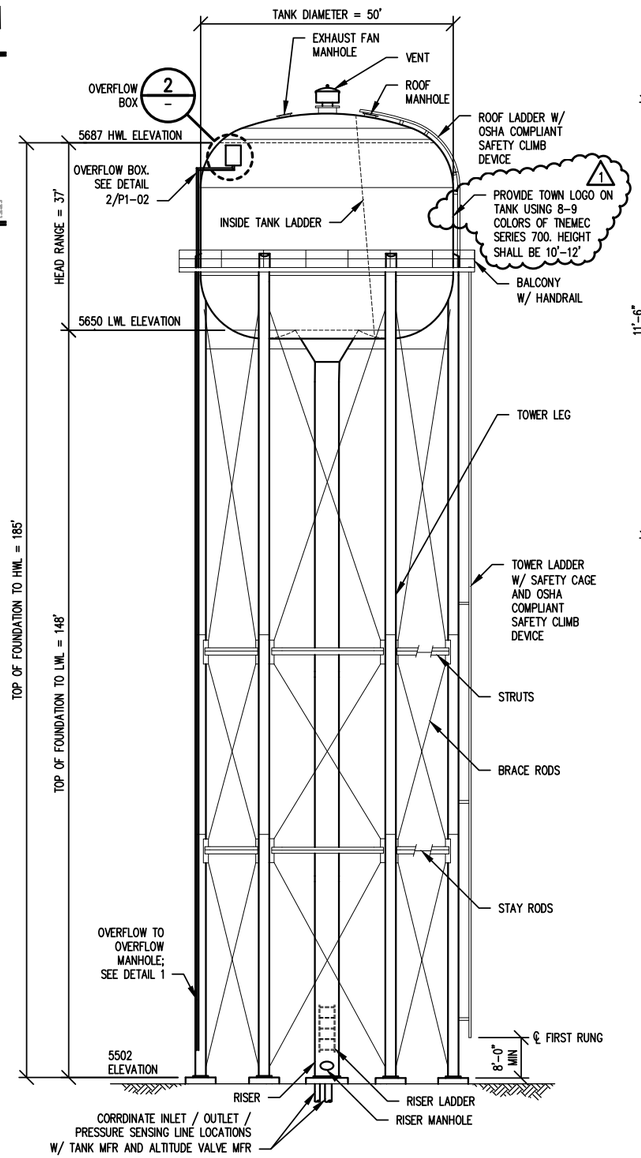

TANK ELEVATION
1"=30'

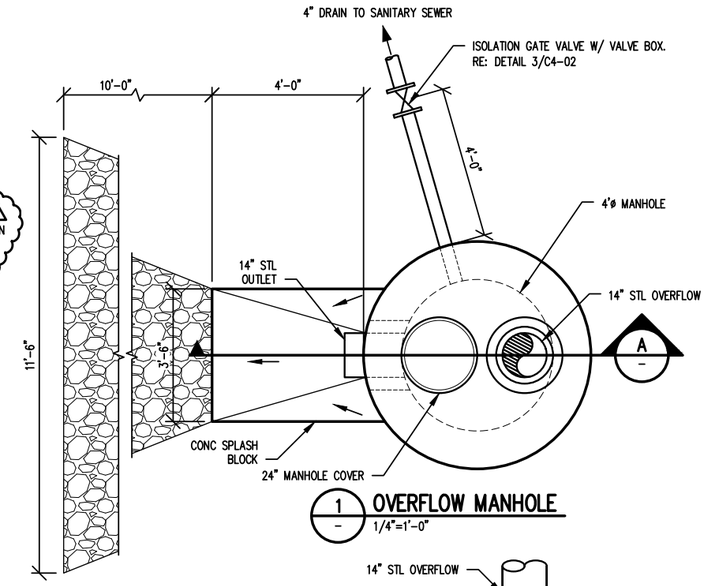

1 OVERFLOW MANHOLE
1/4"=1'-0"

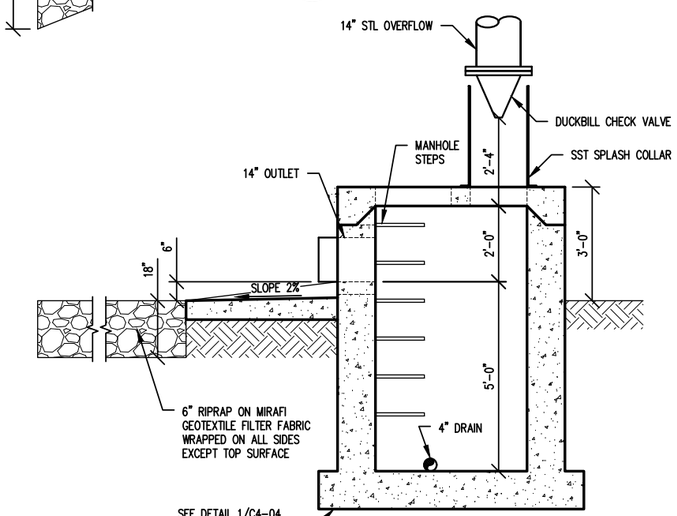

SECTION A
1/4"=1'-0"

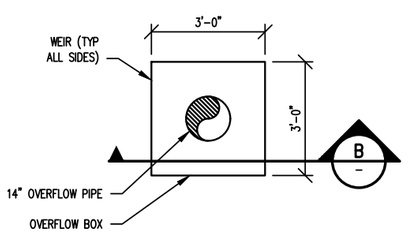

2 OVERFLOW BOX
1/4"=1'-0"

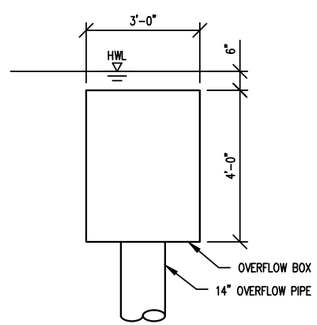

SECTION B
1/4"=1'-0"

COLORADO REGISTERED
ROBERT WALTER FRACHETTI III
30233
4/28/16
PROFESSIONAL ENGINEER

TOWN ENGINEER

DATE

THESE CONSTRUCTION PLANS HAVE BEEN
REVIEWED BY THE TOWN OF BENNETT FOR

IMPROVEMENTS ONLY

WATER STORAGE UPGRADES SHT 34 OF 44

CONSULTING ENGINEER:
ROBERT FRACHETTI, FEI ENGINEERING, INC.
5325 S. VALENTIA WAY
GREENWOOD VILLAGE, CO 80111
(303) 300-3464

0 1 IF THIS BAR DOES NOT MEASURE 1"
DRAWING IS NOT TO LABELED SCALE

Copyright: FEI Engineers Inc.

FEI ENGINEERS

REV. No.	DATE	DESCRIPTION
	2/2016	90% DESIGN REVIEW SET
	3/2016	BID SET
	4/2016	CDPHE RFI
1	6/2016	ADDENDUM No. 5

TOWN OF BENNETT
NEW WATER STORAGE TANK

WATER STORAGE TANK PLAN & ELEVATION

PROJECT No.: BENN-15-0176
DATE: 6/1/2016
DESIGNED BY: PWS
DRAWN BY: SAJ
CHECKED BY: RWF

P1-02

LOCATION: W:\Bennett, Town of\BENN-15-0176 - WATER STORAGE TANK\P1-02.dwg PLOTTED: 6/1/2016 10:06 AM BY: Keith P. Rindt