Xylem- Flowtronex

Pump Station Proposal

Quotation: 4AVQ31DV-U01-P01 (rev.3)
January 29, 2015

Customer:
All Bidders

Project:
Colorado National GC
CO

Vertical Turbine Variable Speed Pump Station

Shipment: Lead time 10 to 12 weeks for standard equipment

Qty	Description

1 Flowtronex model VWTP-1100-2-135 (75HP, 75HP) packaged variable speed pumping station rated for 1100 GPM at 135 PSI at station discharge; 1800 RPM 460/3/60 full voltage, 23' pump length (from top of slab to bottom of pump basket), turbine pump shall have stainless shafting, water lubricated lineshaft bearings, stainless steel strainer, high pressure stuffing box, and vertical hollow shaft drip proof motors with anti-condensation heating element.

Standard construction includes:

- **Custom fabricated pump steel discharge heads with integral air relief & leak-free packing box assembly**
- 3 1/2" silicone filled pressure gauges
- Hose bib connection
- Silent wafer check valves
- Individual grooved pump discharge isolation valves
- Stainless steel pressure transducer
- Continuous weld around deck plate
- Heat exchanger
- Direct to metal paint process (3 Year warranty)
- Steel grit blast of all piping and structural members
- Integral wet well access hatch
- 8" flow meter spool with Data Industrial flow sensor
- 8" station discharge isolation valve
- 3" ClaVal station relief valve

Controls include:

- U.L. listing of complete pump station
- U.L. listed NEMA 4 starter and control panel
- Short Circuit protection rating of 65KA

- 400 amp main disconnect
- Fused motor protection with complete control panel rated for 65KA Short Circuit Current Rating (SCCR)
- **(QTY.2) 75HP 460 volt variable frequency drive**

Flowtronex PACE pump station control software

- Automatic alternation of pumps to maintain 1/10th of an hour balance
- Automatic Diagnostic Utility (ADU)
- Automatic Power Saver (APS)
- **Web enabled for remote monitoring and service – <u>NO subscriber fees required</u>**
- Automatic pump station pre-start prior to irrigation cycle.
- **Integration with Rain Bird Irrigation Central Controller**, *must be supported by the irrigation control system.*
- Re-flow calibration in case of pump faults.
- Pump station shut down if flow is out of pre-set parameters set by irrigation central.
- Lamp test function
- Individual run time monitoring
- First out fault indication
- **Automatic Ramp Up** feature (ARU) will slowly ramp up to design pressure (1 psig every 4 seconds) when filling lines when restarting after a shutdown or whenever pressure has substantially dropped

Safeties:

- VFD fault shutdown with auto restart
- Low discharge pressure with auto restart
- High discharge pressure with auto restart
- Low level shutdown with auto restart
- Phase failure, phase imbalance and low voltage protection
- VFD fault shutdown with auto restart
- Motor Space Heater
- Overload shutdown
- Individual motor phase failure, phase imbalance and low voltage protection
- Surge & lightning arrestor with total power dissipation of 82,500,000 VA Maximum clamping voltage - 1,500 volts (200a Pulse, 8*20 msec)

Color Touch Screen Interface, Nema 4 rated, 8 color 320x240 resolution for viewing

- Flow, real time, hourly, weekly and historical
- Discharge pressure set-point
- System pressure
- Pump station diagnostics
- Alarm status and alarm history
- Pump start and stop times
- Pump run times
- Operation registers
- Password protected

Additional Communication / Remote Monitoring Features;

- Power Monitoring with information provide by enclosure installed CT's.

- Pressure flow and alarms
- Fault notification
- Email and text notifications for alarm and fault notification
- On site setting supervision.
- Access to Flowtronex Customer Service technical phone support. Technicians on call 24 hours, seven days a week.
- On site start-up supervision, station calibration & operator training

Price: $83,968.00 + **Freight and fuel service charge if applicable. Additional freight charges will be incurred in the case of ship early items.**

Components and station flow conditions per approved submittals

F.O.B. Dallas, Texas. Prices valid for 60 days from date of proposal unless otherwise noted. All pricing in U.S. dollars

Freight to job site: $2,800.00

January 29, 2015

DJ Varholy, Sales

Price does not include taxes, installation or crane unless otherwise noted.
Freight charges are subject to change based on the rate in effect at the time of shipment

Ordering Information

Please help us expedite your order by providing the following:

If a Purchase Order is issued please reference Proposal Number on the order.

Is The Sale Taxable?	Yes	No	If No Provide Tax Exemption Certificate

Accepted By Buyer: SEE COMMENTS ATTACHED AS EXHIBIT B **Date:** 1/30/15

Signature:	[illegible]
Print Name:	Lisa A. Johnson
Title:	District Manager
Company:	Vista Ridge Metropolitan District
Address:	141 Union Blvd., Ste 150
City/State/Zip	Lakewood, CO 80228
Contact Phone No:	303-987-0835
Email Address:	ljohnson@saimsi.com

Shipping Information

Requested Delivery Date: ASAP

Ship To:	Vista Ridge Metropolitan District
Address:	550 Vista Parkway
City/State/Zip:	Erie, CO 80516
Contact Name:	Brandon Carter or Brad Simons
Phone No:	970-379-8507 720-234-8398
Email Address:	bcarter@coloradongc.com psimons@tza4water.com

After order is received and accepted at Flowtronex we will issue an order acknowledgement email.

TERMS AND CONDITIONS OF SALE – SEE ADDENDUM ATTACHED AS EXHIBIT A
FLOWTRONEX PSI LLC, a Division of Xylem Inc.
(DBA Flowtronex, Water Equipment Technology, A/C FirePumps, Bell & Gossett, and/or Goulds Pumps)

Terms of Payment

The terms of payment shall be as stated herein unless otherwise specified and approved by the Controller.

2.0.1 **Net Cash 30 Days** from date of shipment from factory for all orders up to and including $200,000 unless an existing contract or the customers credit worthiness require advance payments.

2.0.2 Progress **Payment –** For all orders exceeding $200,000 progress payments as follows will apply:
2.0.2.1 (10% Minimum) Included with P.O.
2.0.2.2 (30% Minimum) amount included with approved submittals.
2.0.2.3 (30%) Amount due when buyout equipment is received at the factory.
2.0.2.4 (20%) Amount due when equipment is ready for shipment.
2.0.2.5 (10%) Amount due 30 days following shipment.

2.0.3 All payments shall be in US dollars and pro rata payments shall become due as shipments are made. If shipment is delayed by Purchaser, date of readiness for shipment shall be deemed to be date of shipment for payment purposes. If manufacture is delayed by Purchaser, a payment shall be made based on purchase price and percentage of completion, balance payable in accordance with the terms as stated.
If payments are not made in conformance with the terms stated herein, the contract price shall, without prejudice to the right of RCW Dallas to immediate payment, be increased by 1.5% per month on the unpaid balance but not to exceed the maximum amount permitted by law.
If at any time in the judgment of RCW Dallas, the Purchaser may be or may become unable or unwilling to meet the terms specified; RCW Dallas may require satisfactory assurances of required performance under the contract including partial or full payment as a condition to commencing or continuing manufacture or making shipment, or, if shipment has been made Flowtronex may recover the product from the carrier pending receipt of such assurances.

1. Agreement, Integration and Conflict of Terms. These terms and conditions, together with any special conditions expressly incorporated thereto in the quotation or sales form, are to govern any sale by Flowtronex PSI LLC. (d/b/a Flowtronex, Water Equipment Technology, A/C Firepumps, Bell & Gossett, and/or Goulds), a division of Xylem Inc. ("Seller"). This writing is an offer or counteroffer by Seller to sell the goods and/or services set forth on the quotation or sales form subject to these terms and conditions and is expressly made conditional on Buyer's assent to these terms and conditions. Acceptance by Buyer is expressly limited to these terms and conditions. Any additional or different terms and conditions contained in Buyer's purchase order or other communication shall not be effective or binding upon Seller unless specifically agreed to in writing by Seller; Seller hereby objects to any such conditions, and the failure of Seller to object to specific provisions contained in any purchase order or other communication from Buyer shall not be construed as a waiver of these terms and conditions nor an acceptance of any such provisions. Neither Seller's commencement of performance nor delivery shall be deemed or construed as acceptance of Buyer's additional or different terms and conditions.

Buyer agrees that these terms and conditions, together with any accompanying quotation and any special conditions or limited process guarantees or documents referred to or included within the quotation and expressly made a part of this agreement, (e.g., drawings, illustrations, specifications, or diagrams), is the complete and final agreement between the parties ("Agreement"). This

Agreement supersedes all prior negotiations, representations, or agreements, either written or oral, between the parties and, further, can only be altered, modified or amended with the express written consent of Seller.

2. Quotation, Withdrawal, Expiration. Quotes are valid for thirty (30) calendar days from the date of issuance. Seller reserves the right to cancel or withdraw the quotation at any time with or without notice or cause prior to acceptance by Buyer. There is no Agreement if any conditions specified within the quotation ***or*** sales form are not completed by Buyer to Seller's satisfaction within thirty (30) calendar days of Seller's acknowledgement in writing of an order. Seller nevertheless reserves its right to accept any contractual documents received from Buyer after this 30-day period.

3. Prices. Prices apply to the specific quantities stated on the quotation or sales form. Unless otherwise agreed to in writing by Seller, all prices are F.O.B. Seller's plant, and do not include transportation costs or charges relating to transportation, which costs and charges shall be solely the responsibility of Buyer. Prices include standard packing according to Seller's specifications. All costs and taxes for special packing requested by Buyer, including packing for exports, shall be paid by Buyer as an additional charge. Prices are subject to change without notice.

4. Taxes. The price for the goods does not include any applicable sales, use, excise, GST, VAT, or similar tax. Buyer shall have the responsibility for the payment of such taxes if applicable.

5. Payment Terms. Seller reserves the right to require payment in advance or C.O.D. and otherwise modify credit terms should Buyer's credit standing not meet Seller's acceptance. Unless different payment terms are expressly set forth in the quotation or sales form or order acknowledgment or Sales Policy Manual, goods will be invoiced upon shipment. Payment in full is due within thirty (30) days from the invoice date. In the event payment is not made when due, Buyer agrees to pay Seller a service or finance charge of the lesser of (i) one and one-half percent (1.5%) per month (18% per annum), or (ii) the highest rate permitted by applicable law, on the unpaid balance of the invoice from and after the invoice due date. Buyer is responsible for all costs and expenses associated with any checks returned due to insufficient funds. All credit sales are subject to prior approval of Seller's credit department. Export shipments will require payment prior to shipment or an appropriate Letter of Credit. If, during the performance of the contract with Buyer, the financial responsibility or condition of Buyer is such that Seller in good faith deems itself insecure, or if Buyer becomes insolvent, or if a material change in the ownership of Buyer occurs, or if Buyer fails to make any payments in accordance with the terms of its contract with Seller, then, in any such event, Seller is not obligated to continue performance under the contract and may stop goods in transit and defer or decline to make delivery of goods, except upon receipt of satisfactory security or cash payments in advance, or Seller may terminate the order upon written notice to Buyer without further obligation to Buyer whatsoever. If Buyer fails to make payments or fails to furnish security satisfactory to Seller, then Seller shall also have the right to enforce payment to the full contract price of the work completed and in process. Upon default by Buyer in payment when due, Buyer shall immediately pay to Seller the entire unpaid amounts for any and all shipments made to Buyer irrespective of the terms of said shipment and whether said shipments are made pursuant to this Agreement or any other contract of sale between Seller and Buyer, and Seller may withhold all subsequent shipments until the full amount is settled. Acceptance by Seller of less than full payment shall not be a waiver of any of its rights hereunder.

Buyer shall not assign or transfer this Agreement or any interest in it, or monies payable under it, without the written consent of Seller and any assignment made without such consent shall be null and void.

6. Delivery, Risk of Loss. Delivery dates are estimates, and time is not of the essence. All shipments will be made F.O.B. Seller's plant unless otherwise specified. Seller shall not be responsible to Buyer for any loss, whether direct, indirect, incidental or consequential in nature, including without limitation loss of profits, arising out of or relating to any failure of the goods to be delivered by the specified delivery date. In the absence of specific instructions, Seller will select the carrier. Upon delivery to the common carrier, title and the risk of loss for the material shall pass to Buyer. Buyer shall reimburse Seller for the additional cost of its performance resulting from inaccurate or lack of delivery instructions, or by any act or omission on Buyer's part. Any such additional cost may include, but is not limited to, storage, insurance, protection, re-inspection and delivery expenses. Buyer further agrees that any payment due on delivery shall be made on delivery into storage as though goods had been delivered in accordance with the order. If Buyer arranges shipment through a carrier of their choosing, Seller reserves the right to charge $800/month or 1%/month of the order value, prorated, whichever is larger if Buyer doesn't pickup within 5 business days of being notified that the order is ready for pickup.

7. Warranty. For goods sold by Seller to Buyer that are used by Buyer for personal, family or household purposes, Seller warrants the goods to Buyer on the terms of Seller's limited warranty available on Seller's website. For goods sold by Seller to Buyer for any other purpose, Seller warrants that the goods sold to Buyer hereunder (with the exception of membranes, seals, gaskets, elastomer materials, coatings and other "wear parts" or consumables all of which are not warranted except as otherwise provided in the quotation or sales form) will be (i) be built in accordance with the specifications referred to in the quotation or sales form, if such specifications are expressly made a part of this Agreement, and (ii) free from defects in material and workmanship for a period of one (1) year from the date of installation or eighteen (18) months from the date of shipment (which

date of shipment shall not be greater than thirty (30) days after receipt of notice that the goods are ready to ship), whichever shall occur first (the "Warranty").

Seller shall, at its option and at no cost to Buyer, either repair or replace any product which fails to conform with the Warranty; provided, however, that under either option, Seller shall not be obligated to remove the defective product or install the replaced or repaired product and Buyer shall be responsible for all other costs, including, but not limited to, service costs, shipping fees and expenses. Seller shall have complete discretion as to the method or means of repair or replacement. Buyer's failure to comply with Seller's repair or replacement directions shall constitute a waiver of its rights and render all warranties void. Any parts repaired or replaced under the Warranty are warranted only for the balance of the warranty period on the parts that were repaired or replaced. The Warranty is conditioned on Buyer giving written notice to Seller of any defects in material or workmanship of warranted goods within ten (10) days of the date when any defects are first manifest.

Seller shall have no warranty obligations to Buyer with respect to any product or parts of a product that: (a) have been repaired by third parties other than Seller or without Seller's written approval; (b) have been subject to misuse, misapplication, neglect, alteration, accident, or physical damage; (c) have been used in a manner contrary to Seller's instructions for installation, operation and maintenance; (d) have been damaged from ordinary wear and tear, corrosion, or chemical attack; (e) have been damaged due to abnormal conditions, vibration, failure to properly prime, or operation without flow; (f) have been damaged due to a defective power supply or improper electrical protection; or (g) have been damaged resulting from the use of accessory equipment not sold by Seller or not approved by Seller in connection with products supplied by Seller hereunder. In any case of products not manufactured by Seller, there is no warranty from Seller; however, Seller will extend to Buyer any warranty received from Seller's supplier of such products.

THE FOREGOING WARRANTY IS EXCLUSIVE AND IN LIEU OF ANY AND ALL OTHER EXPRESS OR IMPLIED WARRANTIES, GUARANTEES, CONDITIONS OR TERMS OF WHATEVER NATURE RELATING TO THE GOODS PROVIDED HEREUNDER, INCLUDING WITHOUT LIMITATION ANY IMPLIED WARRANTIES OF MERCHANTABILITY AND FITNESS FOR A PARTICULAR PURPOSE, WHICH ARE HEREBY EXPRESSLY DISCLAIMED AND EXCLUDED. BUYER'S EXCLUSIVE REMEDY AND SELLER'S AGGREGATE LIABILITY FOR BREACH OF ANY OF THE FOREGOING WARRANTIES ARE LIMITED TO REPAIRING OR REPLACING THE PRODUCT AND SHALL IN ALL CASES BE LIMITED TO THE AMOUNT PAID BY THE BUYER HEREUNDER. IN NO EVENT IS SELLER LIABLE FOR ANY OTHER FORM OF DAMAGES, WHETHER DIRECT, INDIRECT, LIQUIDATED, INCIDENTAL, CONSEQUENTIAL, PUNITIVE, EXEMPLARY OR SPECIAL DAMAGES, INCLUDING BUT NOT LIMITED TO LOSS OF PROFIT, LOSS OF ANTICIPATED SAVINGS OR REVENUE, LOSS OF INCOME, LOSS OF BUSINESS, LOSS OF PRODUCTION, LOSS OF OPPORTUNITY OR LOSS OF REPUTATION.

8. Inspection. Buyer shall have the right to inspect the goods upon their receipt. When delivery is to Buyer's site or to a project site ("Site"), Buyer shall notify Seller in writing of any nonconformity of the goods with this Agreement within three (3) days from receipt by Buyer. For all other deliveries, Buyer shall notify Seller in writing of any nonconformity with this Agreement within fourteen (14) days from receipt by Buyer. Failure to give such applicable notice shall constitute a waiver of Buyer's right to inspect and/or reject the goods for nonconformity and shall be equivalent to an irrevocable acceptance of the goods by Buyer. Claims for loss of or damage to goods in transit must be made to the carrier, and not to Seller.

9. Seller's Limitation of Liability. IN NO EVENT SHALL SELLER'S LIABILITY UNDER THIS AGREEMENT EXCEED THE AMOUNT PAID BY BUYER UNDER THIS AGREEMENT. SELLER SHALL HAVE NO LIABILITY FOR LOSS OF PROFIT, LOSS OF ANTICIPATED SAVINGS OR REVENUE, LOSS OF INCOME, LOSS OF BUSINESS, LOSS OF PRODUCTION, LOSS OF OPPORTUNITY, LOSS OF REPUTATION, INDIRECT, CONSEQUENTIAL, INCIDENTAL, PUNITIVE OR EXEMPLARY DAMAGES.

10. Force Majeure. Seller may cancel or suspend this Agreement and Seller shall have no liability for any failure to deliver or perform, or for any delay in delivering or performing any obligations, due to acts or omissions of Buyer and/or its contractors, or due to circumstances beyond its reasonable control, including but not limited to acts of God, fire, flood or other natural disasters, war and civil disturbance, riot, acts of governments, terrorism, disease, currency restrictions, labor shortages or disputes, unavailability of materials, fuel, power, energy or transportation facilities, failures of suppliers or subcontractors to effect deliveries, in which case the time for performance shall be extended in an amount equal to the excused period, provided that Seller shall have, as soon as reasonably practicable after it has actual knowledge of the beginning of any excusable delay, notified Buyer of such delay, of the reason therefor and of the probable duration and consequence thereof. Seller shall use its best efforts to eliminate the cause of the delay, interruption or cessation and to resume performance of its obligations hereunder with the least possible delay.

11. Cancellation. Except as otherwise provided in this Agreement, no order may be cancelled unless requested in writing by either party and accepted in writing by the other. In the event of a cancellation by Buyer, Buyer shall, within thirty (30) days of such cancellation, pay Seller a cancellation fee, which shall include all costs and expenses incurred by Seller prior to the receipt

of the request for cancellation including, but not limited to, all commitments to its suppliers, subcontractors and others, all labor and overhead expended by Seller, plus a reasonable charge for profit.

Notwithstanding anything to the contrary herein, in the event of the commencement by or against Buyer of any voluntary or involuntary proceedings in bankruptcy or insolvency, or in the event Buyer shall be adjusted bankrupt, make a general assignment for the benefit of its creditors, or if a receiver shall be appointed on account of Buyer's insolvency, or if Buyer fails to make payment when due under this Agreement, or in the event Buyer does not correct or, if immediate correction is not possible, commence and diligently continue action to correct any default of Buyer to comply with any of the provisions or requirements of this Agreement within ten (10) calendar days after being notified in writing of such default by Seller, Seller may, by written notice to Buyer, without prejudice to any other rights or remedies which Seller may have, terminate its further performance of this Agreement. In the event of such termination, Seller shall be entitled to receive payment as if Buyer has cancelled the Agreement as per the preceding paragraph. Seller may nevertheless elect to complete its performance of this Agreement by any means it chooses. Buyer agrees to be responsible for any additional costs incurred by Seller in so doing.

Upon termination of this Agreement, the rights, obligations and liabilities of the parties which shall have arisen or been incurred under this Agreement prior to its termination shall survive such termination.

12. Drawings. All drawings are the property of Seller. Seller does not supply detailed or shop working drawings of the goods; however, Seller will supply necessary installation drawings. The drawings and bulletin illustrations submitted with Seller's quotation show general type, arrangement and approximate dimensions of the goods to be furnished for Buyer's information only and Seller makes no representation or warranty regarding their accuracy. Unless expressly stated to the contrary within the quotation or sales form, all drawings, illustrations, specifications or diagrams form no part of this Agreement. Seller reserves the right to alter such details in design or arrangement of its goods which, in its judgment, constitute an improvement in construction, application or operation. All engineering information necessary for installation of the goods shall be forwarded by Seller to upon Buyer's acceptance of this Agreement. After Buyer's acceptance of this Agreement, any changes in the type of goods, the arrangement of the goods, or application of the goods requested by Buyer will be made at Buyer's expense. Instructions necessary for installation, operating and maintenance will be supplied when the goods are shipped.

13. Proprietary Information, Injunction. Seller's designs, illustrations, drawings, specifications, technical data, catalogues, "know-how", economic or other business or manufacturing information (collectively "Proprietary Information") disclosed to Buyer shall be deemed proprietary and confidential to Seller. Buyer agrees not to disclose, use, or reproduce any Proprietary Information without first having obtained Seller's express written consent. Buyer's agreement to refrain from disclosing, using or reproducing Proprietary Information shall survive completion of the work under this Agreement. Buyer acknowledges that its improper disclosure of Proprietary Information to any third party will result in Seller's suffering irreparable harm. Seller may seek injunctive or equitable relief to prevent Buyer's unauthorized disclosure.

14. Installation and Start-up. Unless otherwise agreed to in writing by Seller, installation shall be the sole responsibility of Buyer. Where start-up service is required with respect to the goods purchased hereunder, it must be performed by Seller's authorized personnel or agents; otherwise, the Warranty is void. In the event Buyer has engaged Seller to provide an engineer for start-up supervision, such engineer will function in a supervisory capacity only and Seller shall have no responsibility for the quality of workmanship of the installation. In any event, Buyer understands and agrees that it shall furnish, at Buyer's expense, all necessary foundations, supplies, labor and facilities that might be required to install and operate the goods.

15. Specifications. Changes in specifications requested by Buyer are subject to approval in writing by Seller. In the event such changes are approved, the price for the goods and the delivery schedule shall be changed to reflect such changes.

16. Buyer Warranty. Buyer warrants the accuracy of any and all information relating to the details of its operating conditions, including temperatures, pressures, and where applicable, the nature of all hazardous materials. Seller can justifiably rely upon the accuracy of Buyer's information in its performance. Should Buyer's information prove inaccurate, Buyer agrees to reimburse Seller for any losses, liabilities, damages and expenses that Seller may have incurred as a result of any inaccurate information provided by Buyer to Seller.

17. Minimum Order. Seller reserves the right to refuse to process any order that does not meet quantity requirements that Seller may establish for any given product or group of products.

18. Quality Levels. Prices are based on quality levels commensurate with normal processing. If a different quality level is required, Buyer must specify its requirements, as approved in writing by Seller, and pay any additional costs that may be applicable.

19. GOVERNING LAW. THE TERMS OF THIS AGREEMENT AND ALL RIGHTS AND OBLIGATIONS HEREUNDER SHALL BE GOVERNED BY THE LAWS OF THE STATE OF SELLER'S OFFICE TO WHICH THIS ORDER HAS BEEN SUBMITTED (WITHOUT REFERENCE TO PRINCIPLES OF CONFLICTS OF LAWS). THE RIGHTS AND

OBLIGATIONS OF THE PARTIES HEREUNDER SHALL NOT BE GOVERNED BY THE 1980 U.N. CONVENTION ON CONTRACTS FOR THE INTERNATIONAL SALE OF GOODS.

20. Titles. The section titles are for reference only, and shall not limit or restrict the interpretation or construction of this Agreement.

21. Waiver. Seller's failure to insist, in any one or more instances, upon Buyer's performance of this Agreement, or to exercise any rights conferred, shall not constitute a waiver or relinquishment of any such right or right to insist upon Buyer's performance in any other regard.

22. Severability. The partial or complete invalidity of any one or more provisions of this Agreement shall not affect the validity or continuing force and effect of any other provision.

EXHIBIT A

ADDENDUM TO FLOWTRONEX PSI, LLC PUMP STATION PROPOSAL

By execution of this Addendum (this "**Addendum**") to that certain Pump Station Proposal by and between Vista Ridge Metropolitan District (the "**District**") and Flowtronex PSI, LLC, a Division of Xylem Inc. ("**Seller**"), dated December 17, 2014 (the "**Agreement**"), Seller and the District, each a "**Party**" and collectively the "**Parties,**" hereby further agree as follows:

1. All parts and components of the Vertical Turbine Variable Speed Pump Station (the "**Pump Station**") shall be of brand new, previously unused and first quality condition.

2. Shipment of the Pump Station to the District shall be fully insured at one hundred percent (100%) of the purchase price for the Pump Station, including freight and fuel service charges. The District agrees to pay the premium associated with such shipping insurance upon notice from Seller.

3. Notwithstanding the provisions of Section 8 of the Agreement, the Parties agree that the District shall have seven (7) days to inspect the Pump Station upon receipt and to notify Seller of any nonconformity of the Pump Station with the Agreement.

4. The Parties agree that for purposes of enforcing any provision of the Agreement in accordance with Section 19 thereof, the State of Seller's office, and thus the governing law for the Agreement, shall be deemed to be the State of New York. The Parties agree, however, that in the event of any dispute under the Agreement, the exclusive venue for resolution of such dispute shall be in the State of Colorado.

5. All notices, demands, or other communications of any type given, or required to be given, pursuant to the Agreement shall be in writing and shall be delivered in person with a receipt requested therefor, sent by postage prepaid certified or registered mail, return receipt requested, or sent by a recognized overnight service for next day delivery to the Party to whom the notice is directed at the addresses that follows:

To Seller: Flowtronex PSI, LLC
_____
_____
_____
Attn: _____

To the District: Vista Ridge Metropolitan District
c/o Special District Management Service, Inc.
141 Union Boulevard, Suite 150
Lakewood, CO 80228
Attn: Lisa Johnson

Notices and demands will be deemed effective upon receipt. The person and place to which notices are to be given may be changed by written notice to the other Party.

IN WITNESS WHEREOF, the Parties have executed this Addendum to Flowtronex PSI, LLC Pump Station Proposal on January 30, 2015.

VISTA RIDGE METROPOLITAN DISTRICT

President

Attest:

Secretary

FLOWTRONEX PSI, LLC, A Division of Xylem Inc.

By:
Name: SIMON REGOEN
Title: Controller

EXHIBIT B

TZA Water Engineers
a Lamp Rynearson Company

12596 W. Bayaud Ave., Ste. 330
Lakewood, Colorado 80228
303-971-0030
tza4water.com

Vista Ridge Metropolitan District/Colorado Nation Golf Club
Coal Creek Raw Water Pump Station
Submittal No. 2 Review Comments
(TZA Project No. 0414025)

Submittal No. 2 was received by TZA on January 12, 2015 via e-mail from DJ Varholy (Xylem) at 1:07 p.m. (MST).

Page 1: UL certification for Flowtronex PSI's industrial control panels.

No review comments.

Page 2: Preliminary pump skid dimensional drawing.

The actual pump skid layout and dimensions shall be revised based upon existing site plan and profiles drafted by TZA Water Engineers and transmitted to Dan Gregg (Xylem) on December 3, 2014.

There is conflicting information between the preliminary pump skid dimensional drawing and the Pump Station Proposal, dated January 12, 2015. For example, the dimensional drawing indicates the pump discharge is 6" and the flowmeter is 6", but the proposal indicates the flow meter is 8" and the discharge isolation valve is 8".

The dimensional drawing indicates the pumpset ("unconfirmed") is 23'-0", but the existing plan and profiles drawing suggests this would result in more than 1'-0" clearance from wetwell bottom, potentially affecting the minimum submergence for vortex suppression, as communicated by Jeff Smith (Goulds TTO) via e-mail on December 19, 2014. The actual pumpset depth shall be field adjusted with column pipe and line shaft provided by Xylem-Flowtronex.

Pages 3 to 10: Xylem-Flowtronex Pump Station Proposal.

Refer to comments on the preliminary pump skid dimensional drawing above for dimensional matters to be resolved.

A second 75HP 460 volt variable frequency drive shall be provided in accordance with the option identified on Page 5.

Pricing does not include taxes, installation, or crane, so the District and the Colorado National Golf Course shall address these items independent of TZA Water Engineer's review of this submittal.

Page 6 to 10 outline the terms and condition of sale, so the District and the Colorado National Golf Course shall review and address these items independent of TZA Water Engineer's review of this submittal.

Pages 11 to 24: Flowtronex's Vertical Turbine VFD Pump Specifications w/ PACE Controls.

Section 1.00 indicates "The pumping system shall automatically maintain a constant discharge pressure regardless of varying flow demands within the station rating." For this application, the pumping system shall automatically maintain a constant flow regardless of varying discharge pressures.

Section 7.00 indicates the station controls to "reliably pump variable flow rates at a constant discharge pressure". For this application, the pumping system shall automatically maintain a constant flow regardless of varying discharge pressures.

Section 7.60D indicates the software will ramp up the system to the "desired operating pressure without overshooting design pressure". For this application, the setpoint will be a flow rate.

Section 7.60G indicates the VFD will alternate between pumps. For this installation, one VFD shall be provided for each pump.

Section 7.60J is not application as this installation will have one VFD for each pump.

Section 7.61 is based upon a constant discharge pressure. For this application, the pumping system shall automatically maintain a constant flow regardless of varying discharge pressures.

Section 7.62 references "pressure maintenance". For this application, the pumping system shall automatically maintain a constant flow regardless of varying discharge pressures.

Section 7.90 indicates the pump station controls shall communicate with Toro Lynx. The Colorado National Golf Club has Toro Site Pro.

Pages 25 to 27: Vertical Turbine Variable Speed Prefabricated Pump Station Technical Specification.

Page 27: The wet well depth is greater than 23'. The wet well diameter is 96".

Page 28: Short Set Lineshaft Turbine Pumps data sheet and curves.

The design point referenced for this sheet is 650 gpm at 335 feet of head, which is not the design point for this installation. It does not appear this sheet was modified from the original submittal.

Page 29: Vertical HOLLOSHAFT Motor data sheet.

No review comments.

Pages 30 to 35: Butterfly valve data sheets.

No review comments.

Pages 36 and 37: Check valve data sheets.

No review comments.

Pages 38 to 40: Pressure relief valve.

No review comments.

Pages 41 to 42: Pressure gauges.

No review comments.

Page 43: Flow sensor.

Provide a 2" Thredolet for 4" to 6" pipe (Accessory No. 2X4-6THD).

Page 44 to 46: Stuffing box drawings.

No review comments.

Pages 47 to 50: General purpose industrial pressure transducer.

Identify the product code per the characters on Page 50.

Page 51 to 52: Heat exchanger.

What is the source of the "clean, cool water" for this unit?

Pages 53 and 54: Touch Panel Computer.

No review comments.

Pages 55 to 58: Digital input module, digital output module, and fieldbus controller.

No review comments.

Pages 59 to 71: ABB drives.

Assure drives are properly rated for site conditions (i.e. elevation).

Pages 72 to 75: Integrated pump controller.

No review comments.

Pages 76 to 77: Surge protective device.

No review comments.

Pages 78 to 81: Automation transformers.

No review comments.

Comments assembled by: Bradley A. Simons, P.E.
Date: January 15, 2015

TZA Water Engineers
a Lamp Rynearson Company

12596 W. Bayaud Ave., Ste. 330
Lakewood, Colorado 80228
303-971-0030
tza4water.com

Vista Ridge Metropolitan District/Colorado Nation Golf Club
Coal Creek Raw Water Pump Station
Submittal No. 2 Review Comments on Responses
(TZA Project No. 0414025)

Xylem's complete responses to my comments on Submittal No. 2 were received by TZA on January 27, 2015 via e-mail from DJ Varholy (Xylem) at 3:49 p.m. (MST).

Pages 11 to 24: Flowtronex's Vertical Turbine VFD Pump Specifications w/ PACE Controls.

Section 1.00 indicates "The pumping system shall automatically maintain a constant discharge pressure regardless of varying flow demands within the station rating." For this application, the pumping system shall automatically maintain a constant flow regardless of varying discharge pressures. **The system must be designed to maintain a user-defined flow to meet the deliveries to either Pond 13 or Pond 17, not a specified TDH.**

Section 7.61 is based upon a constant discharge pressure. For this application, the pumping system shall automatically maintain a constant flow regardless of varying discharge pressures. **The system must be designed to maintain a user-defined flow to meet the deliveries to either Pond 13 or Pond 17, not a specified TDH.**

Page 28: Short Set Lineshaft Turbine Pumps data sheet and curves.

The design point referenced for this sheet is 650 gpm at 335 feet of head, which is not the design point for this installation. It does not appear this sheet was modified from the original submittal.

Attached are printouts of the two pdfs ("550 gpm Turbine Pumps (4)" and "1300 rpm Turbine Pumps (5)") provided via e-mail at 5:51 p.m. (MST) on January 26, 2015. The two notes at the top of pdf "1300 rpm Turbine Pumps (5)" are concerning:

1. **The design point is outside of the pump's selection window.**
2. **The pump's head at the design flow rate is below the design point head valve.**

I would like Xylem's engineering manager to address these comments in writing.

Page 43: Flow sensor.

Provide a 2" Thredolet for 4" to 6" pipe (Accessory No. 2X4-6THD). **In lieu of a 2" Thredolet as an accessory for installation, a 2" NPT pipe saddle is also acceptable.**

Pages 47 to 50: General purpose industrial pressure transducer.

Identify the product code per the characters on Page 50. **A "G20" pressure range of 0-200 psi would be preferred, in lieu of the "G30" (0-300 psi) identified, unless Xylem can document a condition where the system is expected to exceed 200 psi (462 feet TDH).**

Page 51 to 52: Heat exchanger.

What is the source of the "clean, cool water" for this unit? **Is the surface water source (i.e. Coal Creek) clean enough to meet Kooltronic's requirements? Also, how is the source water fed to the heat exchanger?**

Comments assembled by: Bradley A. Simons, P.E.
Date: January 28, 2015

"550 gpm Turbine Pumps (4)"

Product Name: VIT - Short Set Lineshaft Turbine Pumps

Product Id: GWT_VIT

xylem

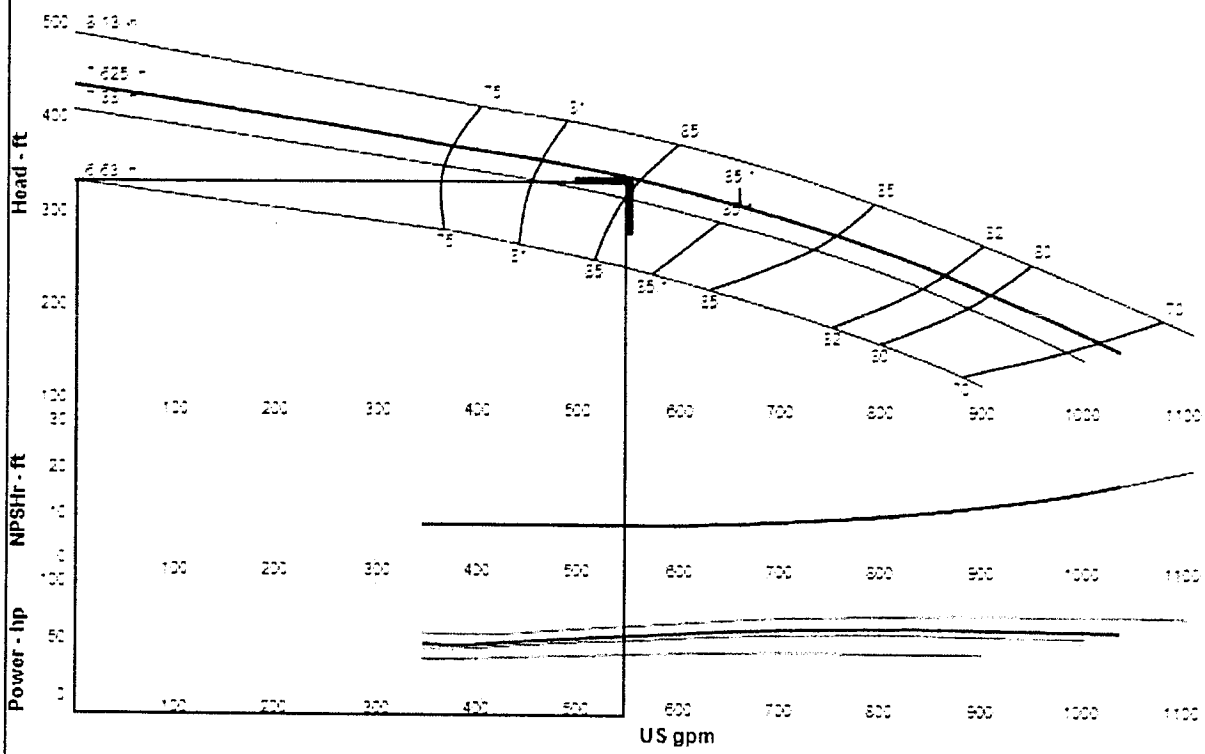

Sizing Criteria

SearchListID	372355	Max Power on Design Curve	62.8 Hp
Series	GWT_VIT	Impeller Maximum Trim	8.13 in inch
Size	11CLC	Max Power on Max Imp Trim	74.5 Hp
Additional Size	11CLC	Exact Bowl Diameter	11 inch
Curve ID	56411CFPC1	Flow at BEP	559 USGPM
Speed	1770	Max Lateral	0.88 inch
Impeller Trim	7.62 inch	Flow on Design Trim @ Max Power	652 USGPM
Additional Impeller Trim	7.62 inch	Pressure Limit	-- psi
Head at Design	338 ft = 146 PSI	Shut-Off Disc Pressure	189 psi
Efficiency at Design	84.7	Thrust K Factor	Y
Best Efficiency	85.1	Flow on Max Imp Trim @ Max Power	901 USGPM
NPSH Required	8.02 ft	Driver Size Criteria	MXT[illegible]
Power at Design	55.5 Hp	Frequency	60
Driver Size	75 Hp	Specified Flow	550 USGPM
Min Flow	---	Specified Head	335 ft = 145 PSI
Flow at Design	552 USGPM	Specified NPSH Avail.	34 ft
Max Solids Sphere Size	0.88 inch	NPSHa Margin	2 ft
Number of Stages	6	Fluid Type	WATER
Shut-Off Head	436 ft	Temperature	70 F

"1330 rpm Turbine Pumps (5)"

Product Name: VIT - Short Set Lineshaft Turbine Pumps

Product Id: GWT_VIT

1330 RPM
POND 17

xylem

1. The design point is outside of the pump's selection window.
2. The pump's head at the design flow rate is below the design point head value.

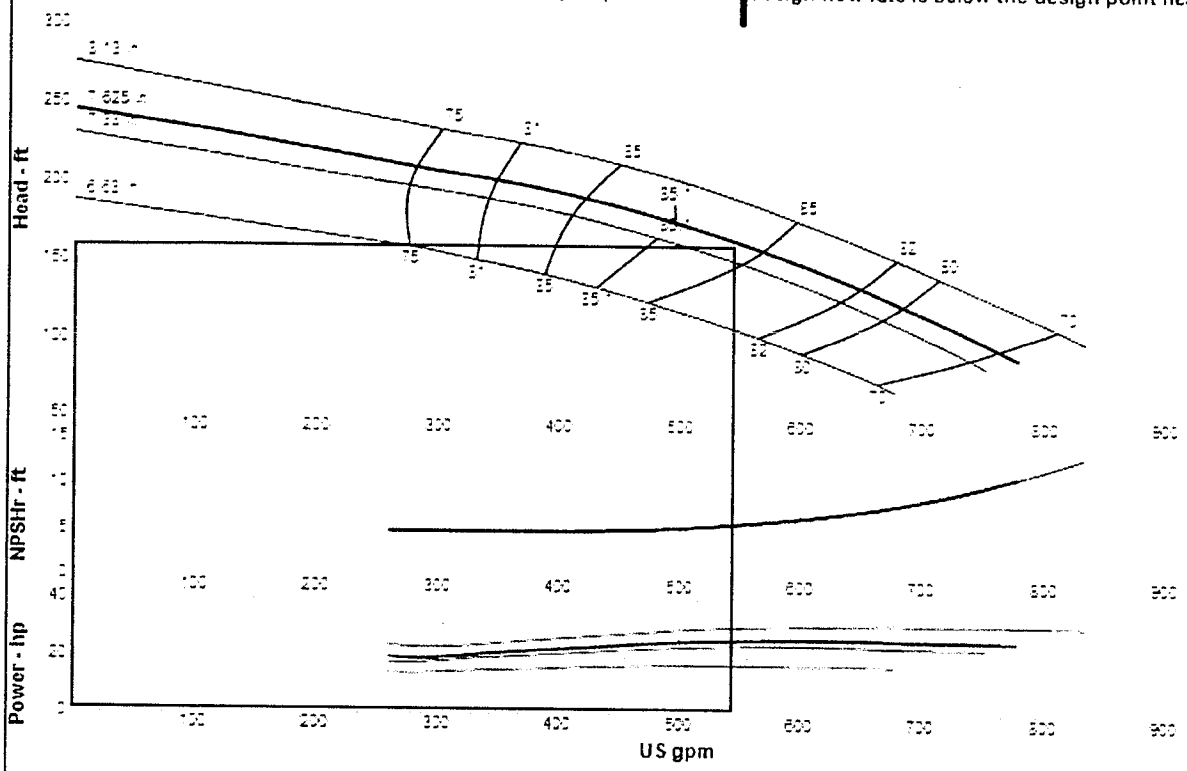

Sizing Criteria

SearchListID	372853	Max Power on Design Curve	23.6 Hp
Series	GWT_VIT	Impeller Maximum Trim	8.13 in inch
Size	11CLC	Max Power on Max Imp Trim	31.6 Hp
Additional Size	11CLC	Exact Bowl Diameter	11 inch
Curve ID	E6411CFPC1	Flow at BEP	495 USGPM
Speed	1330	Max Lateral	0.66 inch
Impeller Trim	7.62 inch	Flow on Design Trim @ Max Power	646 USGPM
Additional Impeller Trim	7.62 inch	Pressure Limit	--- psi
Head at Design	191 ft = 83 PSI	Shut-Off Disc Pressure	106 psi
Efficiency at Design	84.7	Thrust K Factor	7
Best Efficiency	85.1	Flow on Max Imp Trim @ Max Power	617 USGPM
NPSH Required	5.08 ft	Driver Size Criteria	30X10
Power at Design	23.6 Hp	Frequency	60
Driver Size	30 Hp	Specified Flow	550 USGPM
Min Flow	---	Specified Head	335 ft
Flow at Design	415 USGPM	Specified NPSH Avail.	34 ft
Allowable Sphere Size	0.66 inch	NPSHaMargin	2 ft
Number of Stages	6	Fluid Type	WATER
Shut-Off Head	246 ft	Temperature	70 F

DR 0180 (02/99)
COLORADO DEPARTMENT OF REVENUE
DENVER CO 80261-0013

CERTIFICATE OF EXEMPTION FOR COLORADO STATE SALES/USE TAX ONLY

THIS LICENSE IS NOT TRANSFERABLE

USE ACCOUNT NUMBER for all references	LIABILITY INFORMATION		ISSUE DATE
98-14868-0000	11 059	N 050101	JUN 05 2001

141 UNION BLVD LAKEWOOD CO

VISTA RIDGE METROPOLITAN DISTRCT
141 UNION BLVD
LAKEWOOD CO 80228

Fred Fisher
Executive Director
Department of Revenue