STATE OF COLORADO

Bill Ritter, Jr., Governor
Martha E. Rudolph, Executive Director

Dedicated to protecting and improving the health and environment of the people of Colorado

4300 Cherry Creek Dr. S.
Denver, Colorado 80246-1530
Phone (303) 692-2000
TDD Line (303) 691-7700
Located in Glendale, Colorado

Laboratory Services Division
8100 Lowry Blvd.
Denver, Colorado 80230-6928
(303) 692-3090

http://www.cdphe.state.co.us

Colorado Department
of Public Health
and Environment

January 5, 2011

Mr. Scott Reasoner, Vice President of Operations
Petroleum Development Corporation
1775 Sherman Street, Suite 3000
Denver, Colorado 80203

Certified Mail Number: 7009 1680 0000 2094 5067

RE: Order for Civil Penalty, Number: SP-110105-1

Dear Mr. Reasoner:

Petroleum Development Corporation is hereby served with the enclosed Order for Civil Penalty ("Penalty Order"). This Penalty Order is issued by the Colorado Department of Public Health and Environment's Water Quality Control Division (the "Division") pursuant to the authority given to the Division by §25-8-608(2) of the *Colorado Revised Statutes*. Payment of the imposed civil penalty should be made in accordance with the methods referenced in the Penalty Order and Compliance Order on Consent Number: SC-101112-1.

If you have any questions regarding the Penalty Order or the payment method, please do not hesitate to contact Mike Harris of this office at (303) 692-3598 or by electronic mail at michael.harris@state.co.us.

Sincerely,

Russell Zigler

Russell Zigler, Legal Assistant
Compliance Assurance Section
Enforcement Unit
WATER QUALITY CONTROL DIVISION

Enclosure(s)

cc: Garfield County Public Health Service
Corporation Service Company, 1560 Broadway, Suite 2090, Denver, CO 80202

ec: Aaron Urdiales, EPA Region VIII
Mark Kadnuck, Engineering Section, CDPHE
Nathan Moore, Permits Section. CDPHE
Dick Parachini, Watershed Program, CDPHE
Michael Beck, FSU, CDPHE

Michael Harris, Case Person
Tania Watson, Compliance Assurance, CDPHE

COLORADO DEPARTMENT OF PUBLIC HEALTH AND ENVIRONMENT

DIVISION OF ADMINISTRATION

WATER QUALITY CONTROL DIVISION

ORDER FOR CIVIL PENALTY **NUMBER: SP-110105-1**

IN THE MATTER OF: **PETROLEUM DEVELOPMENT CORPORATION**
CDPS PERMIT NO. COR-030000
CERTIFICATION NO. COR-038259
GARFIELD COUNTY, COLORADO

This matter having come to my attention as the Designee of the Executive Director of the Colorado Department of Public Health and Environment, upon petition for the imposition of a civil penalty by the Water Quality Control Division's Compliance Assurance Section, and pursuant to §25-8-608, C.R.S., I hereby impose a civil penalty in the amount of One Hundred Four Thousand Nine Hundred Thirty Four Dollars and Fifty Cents ($104,934.50) against Petroleum Development Corporation for the violations cited in the November 12, 2010 Compliance Order on Consent (Number: SC-101112-1). A copy of the Compliance Order on Consent is attached hereto as Exhibit A and is incorporated herein by reference. The civil penalty shall be paid within thirty (30) calendar days of the date of this Order for Civil Penalty and as set forth in the Compliance Order on Consent:

> *"Method of payment shall be by certified or cashier's check drawn to the order of the 'Colorado Department of Public Health and Environment,' and delivered to:*
>
> *Michael Harris*
> *Colorado Department of Public Health and Environment*
> *Water Quality Control Division*
> *Mail Code: WQCD-B2-CAS*
> *4300 Cherry Creek Drive South*
> *Denver, Colorado 80246-1530"*

Dated this 5th day of January, 2011.

Steven H. Gunderson, Director
Water Quality Control Division
DEPARTMENT OF PUBLIC HEALTH AND ENVIRONMENT

Exhibit A

COLORADO DEPARTMENT OF PUBLIC HEALTH AND ENVIRONMENT

DIVISION OF ADMINISTRATION

WATER QUALITY CONTROL DIVISION

COMPLIANCE ORDER ON CONSENT **NUMBER: SC-101112-1**

IN THE MATTER OF: **PETROLEUM DEVELOPMENT CORPORATION**
CDPS PERMIT NO. COR-030000
CERTIFICATION NO. COR-038259
GARFIELD COUNTY, COLORADO

The Colorado Department of Public Health and Environment ("Department"), through the Water Quality Control Division ("Division"), issues this Compliance Order on Consent ("Consent Order"), pursuant to the Division's authority under §§25-8-602 and 605, C.R.S. of the Colorado Water Quality Control Act ("the Act") §§25-8-101 to 703, C.R.S., and its implementing regulations, with the express consent of Petroleum Development Corporation ("PDC"). The Division and PDC may be referred to collectively as "the Parties."

STATEMENT OF PURPOSE

1. The mutual objectives of the Parties in entering into this Consent Order are to resolve, without litigation, the civil penalties associated with alleged violations cited herein and in the Notice of Violation / Cease and Desist Order (Number: SO-081203-1) that the Division issued to PDC on December 3, 2008.

DIVISION'S FINDINGS OF FACT AND DETERMINATION OF VIOLATIONS

2. Based upon the Division's investigation into and review of the compliance issues identified herein, and in accordance with §§25-8-602 and 605, C.R.S., the Division has made the following determinations regarding PDC and its compliance with the Act and PDC's stormwater permit certification.

3. At all times relevant to the alleged violations identified herein, PDC was a Nevada corporation in good standing and registered to conduct business in the State of Colorado.

4. PDC is a "person" as defined under the Water Quality Control Act, §25-8-103(13), C.R.S. and its implementing permit regulation, 5 CCR 1002-61, §61.2(73).

5. In or about December 2005, PDC initiated construction of an access road for oil and gas exploration and production on fifty six (56) acres of land located near County Road 215, approximately ten miles north of the Town of Parachute, in Garfield County, Colorado (the "Project").

6. On May 23, 2005, the Division received an application from PDC, who serves as an operator of the partnership entity, Garden Gulch Road LLC, for Project coverage under the Colorado Discharge Permit System ("CDPS") General Permit, Number COR-030000, for Stormwater Discharges Associated with Construction Activity (the "Permit"). During the times relevant to the alleged violations identified herein, two versions of the Permit were in effect. The version issued and signed on May 21, 2002 was effective from July 1, 2002 through June 30, 2007 (the "2002 Permit"), and the current version, issued and signed on May 31, 2007, became effective on July 1, 2007 and remains in effect until June 30, 2012 (the "2007 Permit").

7. On May 26, 2005, the Division provided PDC Certification Number COR-038259 authorizing PDC to discharge stormwater from the construction activities associated with the Project to Garden Gulch and the Colorado River under the terms and conditions of the Permit. Certification Number COR-038259 became effective May 24, 2005 and remains in effect until June 30, 2012 or until PDC inactivates permit coverage.

8. Garden Gulch and the Colorado River are "state waters" as defined by §25-8-103(19), C.R.S. and its implementing permit regulation, 5 CCR 1002-61, §61.2 (102).

9. Pursuant to 5 CCR 1002-61, §61.8, a permittee must comply with all the terms and conditions of a permit and violators of the terms and conditions specified in a permit may be subject to civil and criminal liability pursuant to §§25-8-601 through 612, C.R.S.

10. On April 17, 2008, a representative from PG Environmental, LLC (the "Inspector") conducted an on-site inspection of the Project on behalf of the Division, pursuant to the Division's authority under §25-8-306, C.R.S., to determine PDC's compliance with the Water Quality Control Act and the Permit. During the inspection, the Inspector interviewed Project representatives, reviewed the Project's stormwater management system records, and performed a physical inspection of the Project.

Deficient and/or Incomplete Stormwater Management Plan

11. Pursuant to Part I. B. of the 2002 and 2007 Permits, PDC is required to prepare and maintain a Stormwater Management Plan ("SWMP") that identifies Best Management Practices ("BMPs") that, when implemented, will meet the terms and conditions of the Permit. The SWMP is required to identify potential sources of pollution, which may be reasonably expected to affect the quality of stormwater discharges associated with construction activity from the Project. In addition, the plan is required to describe and ensure the implementation of BMPs, which will be used to reduce the pollutants in stormwater discharges associated with construction activity.

12. Pursuant to Part I. C. of the 2007 Permit, the Project's SWMP shall include, at a minimum, the following items:

    a. Site Description – The SWMP shall clearly describe the construction activity, including:
        i. The nature of the construction activity.
        ii. The proposed sequence for major activities.

iii. Estimates of the total area of the site and the area of the site that is expected to undergo clearing, excavation or grading.
iv. A summary of any existing data used in the development of the construction plans or SWMP that describe the soil or existing potential for soil erosion.
v. A description of the existing vegetation at the site and an estimate of the percent vegetative ground cover.
vi. The location and description of all potential pollution sources, including ground surface disturbance, vehicle fueling, storage of fertilizers or chemicals, etc.
vii. The location and description of any allowable sources of non-stormwater discharge, such as springs, landscape irrigation return flow, construction dewatering and concrete washout.
viii. The name of the receiving water(s) and the size, type and location of any outfall or, if the discharge is to a municipal separate storm sewer, the name of that system, the location of the storm sewer discharge, and the ultimate receiving water(s).

b. Site Map – The SWMP shall include a legible site map(s), showing the entire site, identifying:
i. Construction site boundaries.
ii. All areas of ground surface disturbance.
iii. Areas of cut and fill.
iv. Areas used for storage of building materials, equipment, soils or wastes.
v. Locations of dedicated asphalt or concrete batch plants.
vi. Locations of all structural BMPs
vii. Locations of all non-structural BMPs.
viii. Locations of springs, streams, wetlands and other surface waters.

c. Stormwater Management Controls - The SWMP must include a description of all stormwater management controls that will be implemented as part of the construction activity to control pollutants in stormwater discharges, including:

i. SWMP Administrator – The SWMP shall identify a specific individual(s), position or title that is responsible for developing, implementing, maintaining and revising the SWMP.
ii. Identification of Potential Pollutant Sources – The SWMP shall identify and describe those sources determined to have the potential to contribute pollutants to stormwater discharges.
iii. Best Management Practices (BMPs) for Stormwater Pollution Prevention – The SWMP shall identify and describe appropriate BMPs that will be implemented at the facility to reduce the potential of pollution sources to contribute pollutants to stormwater discharges. The SWMP shall clearly describe the installation and implementation specifications for each BMP identified in the SWMP.
(1) Structural Practices for Erosion and Sediment Control – The SWMP shall clearly describe and locate all structural practices implemented at the site to minimize erosion and sediment transport. Practices may include, but are not limited to: straw bales, wattles/sediment control logs, silt fences, earth dikes, drainage swales, sediment traps, subsurface drains, pipe slope drains, inlet protection, outlet protection, gabions, and temporary or permanent sediment basins.

(2) Non-Structural Practices for Erosion and Sediment Control – The SWMP shall clearly describe and locate all non-structural practices implemented at the site to minimize erosion and sediment transport. Description must include interim and permanent stabilization practices, and site-specific scheduling for implementation of the practices. Non-structural practices may include, but are not limited to: temporary vegetation, permanent vegetation, mulching, geotextiles, sod stabilization, slope roughening, vegetative buffer strips, protection of trees, and preservation of mature vegetation.

(3) Phased BMP Implementation – The SWMP shall clearly describe the relationship between the phases of construction and the implementation and maintenance of BMPs. The SWMP must identify the stormwater management controls to be implemented during the project phases, which can include, but are not limited to, clearing and grubbing, road construction, utility and infrastructure installation, vertical construction, final grading and final stabilization.

(4) Materials Handling and Spill Prevention – The SWMP shall clearly describe and locate all practices implemented at the site to minimize impacts from procedures or significant materials that could contribute pollutants to runoff.

(5) Dedicated Concrete or Asphalt Batch Plants – The SWMP shall clearly describe and locate BMPs to control stormwater pollution from dedicated concrete batch plants or dedicated asphalt batch plants.

(6) Vehicle Tracking Control – The SWMP shall clearly describe and locate all practices implemented at the site to control potential sediment discharges from vehicle tracking.

(7) Waste Management and Disposal, Including Concrete Washout – The SWMP shall clearly describe and locate the practices implemented at the site to control stormwater pollution from all construction site wastes, including concrete washout activities.

(8) Groundwater and Stormwater Dewatering – The SWMP shall clearly describe and locate the practices implemented at the site to control stormwater pollution from the dewatering of groundwater or stormwater from excavations, wells, etc.

d. Final Stabilization and Long-Term Stormwater Management – The SWMP shall clearly describe the practices used to achieve final stabilization of all disturbed areas at the site, and any planned practices to control pollutants in stormwater discharges that will occur after construction operations have been completed at the site.

e. Inspection and Maintenance – The SWMP shall clearly describe the inspection and maintenance procedures implemented at the site to maintain all erosion and sediment control practices and other protective practices in good and effective operating condition.

13. During the April 17, 2008 inspection, the Inspector reviewed the Project's SWMP and identified the following deficiencies, as described in paragraphs 13(a-j) below:

a. The SWMP did not include estimates of the total area of the site nor the area and location expected to be disturbed by clearing, excavation, grading or other construction activities.

b. The SWMP did not include a summary of existing data used in the development of the construction plans or SWMP that describe the soil or existing potential for soil erosion.

c. The site map included with the SWMP did not clearly identify the construction site boundaries at the site. The map included with the SWMP only depicted the general area of the Project and was not site-specific.

d. The site map included with the SWMP did not include all areas of ground surface disturbance at the Project. The map included with the SWMP only depicted the general area of the Project and did not include the cut or fill slopes observed at the site.

e. The site map included with the SWMP did not include all areas used for storage of buildings materials, equipment, soil or waste. Specifically, the location where road graders were parked and maintained was not depicted on the site map.

f. The site map included with the SWMP did not identify the location of all structural BMPs implemented at the Project. Specifically, check dams, sediment traps, earthen berms, and straw bales were all observed at the site but were not depicted on the site map.

g. The site map included with the SWMP did not identify the location of nearby springs, streams, wetlands or other surface waters. Specifically, the inspector observed that Garden Gulch crosses the road in various locations at the site, but was not depicted on the site map.

h. The SWMP did not include installation and implementation specifications for each BMP. Specifically, the SWMP states that check dams, culvert protection, diversion ditches, slope drains, rock lined ditches, mulches and geotextiles may be used onsite, but specific design details for those BMPS were not included in the SWMP.

i. The SWMP did not describe the relationship between the phases of construction and the implementation and maintenance of both structural and non-structural stormwater management controls.

j. The SWMP did not include a description of the specific practices used to achieve final stabilization of all disturbed areas at the site or planned practices to control pollutants in stormwater discharges that will occur after construction operations have been completed. The SWMP stated that seeding would occur, but did not provide seed mixtures or implementation and maintenance details.

14. In response to the April 17, 2008 inspection, PDC submitted a letter to the Division on May 30, 2008, stating that the SWMP provided to the Inspector on April 17, 2008 was the "Field-Wide Stormwater Management Plan for Construction Activities" and was not specific to the area of the Project that was evaluated by the Inspector during the April 17, 2008 inspection. As such, PDC submitted its "Garden Gulch SWMP," dated June 7, 2006, as the plan that should have been provided to the Inspector during the April 17, 2008 inspection.

15. The Division performed an in-office review of the Project's "Garden Gulch SWMP" and identified the following deficiencies, as described in paragraphs 15(a-o) below:

    a. The SWMP did not specifically describe the proposed sequence of major activities at the Project, such as blasting, clearing and grubbing, etc.

    b. The site description in the SWMP did not include the location of potential pollutant sources.

    c. The site map included with the SWMP did not include the areas used for the storage of building materials, equipment, soil or waste.

    d. The site map included with the SWMP did not include the location of dedicated asphalt or concrete batch plants.

    e. The site map included with the SWMP did not identify the location of nearby springs, streams, wetland or other surface waters.

    f. The SWMP did not include a SWMP Administrator.

    g. The SWMP did not sufficiently describe and locate the structural practices that would be implemented at the Project. No specific direction was provided on how, when, and where BMPs would be implemented at the Project.

    h. The SWMP did not sufficiently describe and locate the non-structural practices that would be implemented at the Project. No specific direction was provided on how, when, and where BMPs would be implemented at the Project.

    i. The SWMP did not sufficiently describe the relationship between the phases of construction and the implementation and maintenance of both structural and non-structural stormwater management controls.

    j. The SWMP did not include specific practices and procedures for spill clean-up. The SWMP referenced an SPCC plan, but it was not included with the SWMP, as required by the 2007 Permit.

    k. The section covering Stormwater Management Controls in the SWMP did not address concrete or asphalt batch plants.

    l. The section covering Stormwater Management Controls in the SWMP did not address vehicle tracking control.

    m. The section covering Stormwater Management Controls in the SWMP did not address groundwater and stormwater dewatering.

    n. The SWMP did not include installation and implementation specifications for BMPs.

o. The SWMP did not include a description of the specific practices used to achieve final stabilization of all disturbed area at the site or planned practices to control pollutants in stormwater discharges that will occur after construction operations have been completed. The SWMP stated that seeding would occur, but did not provide seed mixtures or implementation and maintenance details.

16. The Division has determined that PDC failed to prepare and maintain a complete and accurate SWMP for the Project.

17. PDC's failure to prepare and maintain a complete and accurate SWMP for the Project constitutes violations of Part I. B. of the 2002 Permit and Part I. B. and Part I. C. of the 2007 Permit.

Failure to Implement and/or Maintain
Best Management Practices to Protect Stormwater Runoff

18. Pursuant to Part I. C. 3. c. of the 2007 Permit, PDC is required to implement BMPs to minimize erosion and sediment transport from the Project. The Permit specifies that structural site management practices may include, but are not limited to: straw bales, wattles/sediment control logs, silt fences, earth dikes, drainage swales, sediment traps, subsurface drains, pipe slope drains, inlet protection, outlet protection, gabions, and temporary or permanent sediment basins. The Permit specifies that non-structural site management practices may include, but are not limited to: temporary vegetation, permanent vegetation, mulching, geotextiles, sod stabilization, slope roughening, vegetative buffer strips, protection of trees and preservation of mature vegetation.

19. Pursuant to Part I. D. 2. of the 2007 Permit, PDC is required to select, design, install, implement and maintain appropriate BMPs for all potential pollutant sources at the Project, following good engineering, hydrologic and pollution control practices.

20. Pursuant to Part I. B. 3. of the 2007 Permit, PDC is required to implement the provisions of the Project's SWMP, as written and updated, from the commencement of construction activity until final stabilization is complete.

21. The Division has determined that PDC failed to implement and/or maintain functional BMPs at the Project as described in paragraphs 21(a–f) below:

    a. During the April 17, 2008 inspection, the Inspector observed several culvert inlets and outlets located along the Project with no structural or non-structural BMPs in place to stabilize the disturbed soils or to prevent sediment from discharging from the disturbed areas. Specifically, culvert inlets and outlets with no BMPs were observed at the following geographical locations, as determined by a Global Positioning System ("GPS") receiver: 39°31'54.4"N 108°09'12.2"W, 39°32'07.8"N 108°09'33.7"W, 39°32'16.5"N 108°08'55"W, and 39°31'48.9"N 108°07'29.3"W. Consequently, significant erosion of the disturbed soils surrounding the inlets and outlets was observed.

b. During the April 17, 2008 inspection, the Inspector observed disturbed slopes at the water filling area located at 39°31'57"N 108°07'31.8"W at the Project. A straw wattle was observed in place, however, the straw wattle was deteriorated and did not extend across the entire disturbed slope. No other structural or non-structural BMPs were observed in place to stabilize the disturbed slopes or to prevent sediment from discharging directly to Parachute Creek.

c. During the April 17, 2008 inspection, the Inspector observed numerous disturbed cut slopes located along the Project, including at 39°31'34.3"N 108°09'26.6"W, 39°31'54.4"N 108°09'12.2"W, 39°31'49.6"N 108°09'49.5"W, and 39°32'07.8"N 108°09'33.7"W. No structural or non-structural BMPs were observed in place to stabilize the disturbed slopes, to prevent stormwater run on to the disturbed slopes, or to prevent sediment from discharging from the slopes during storm events.

d. During the April 17, 2008 inspection, the Inspector observed stormwater flow lines that existed along the toe of the Project's numerous disturbed cut slopes. In some cases, such as at 39°31'34.3"N 108°09'26.6"W, PDC failed to implement road-side drainage ditches, as prescribed by the Project's SWMP. In areas where road-side drainage ditches were present, such as at 39°31'49.6"N 108°09'49.5"W and 39°32'07.8"N 108°09'33.7"W, PDC failed to implement structural or non-structural BMPs, as prescribed in the Project's SWMP, to stabilize the disturbed ditches or to prevent sediment from discharging from the ditches.

e. During the April 17, 2008 inspection, the Inspector observed numerous disturbed fill slopes located along the Project, including at 39°31'34.5"N 108°08'55.2"W, 39°31'54.4"N 108°09'12.2"W, 39°32'04.3"N 108°09'22.7"W, 39°32'07.8"N 108°09'33.7"W, and 39°32'22.1"N 108°08'31.9"W. No structural or non-structural BMPs were observed in place to stabilize the disturbed slopes or to prevent sediment from discharging from the slopes and into state waters. Consequently, significant erosion of several disturbed fill slopes was observed.

f. During the April 17, 2008 inspection, the Inspector observed a sediment trap located at 39°32'07.8"N 108°09'33.7"W at the Project. However, the sediment trap had not been designed and installed in accordance with the Project's SWMP, was not being used in concert with upstream erosion and sediment controls and, therefore, was not acting as a functional BMP for sediment removal.

22. PDC's failure to implement and maintain functional BMPs to protect stormwater quality during construction activities at the Project constitutes violations of Part I. C. 3. c., Part I. D. 2., and Part I. B. 3. of the 2007 Permit.

Failure to Conduct Inspections of Stormwater Management System

23. Pursuant to Part I. C. 5. a. of the 2002 Permit and Part I. D. 6. a. of the 2007 Permit, for active sites where construction has not been completed, PDC is required to make a thorough inspection of the Project's stormwater management system at least every 14 days and after any precipitation or snowmelt event that causes surface erosion.

24. Pursuant to Part I. D. 6. b. 2) of the 2007 Permit, PDC is required to keep a record of inspections that describes any corrective actions taken, including the dates the corrective actions were taken, and any measures taken to prevent future violations. After corrective action has been taken, or where a report does not identify any incidents requiring corrective action, the inspection report shall contain a signed statement indicating the site is in compliance with the 2007 Permit.

25. During the April 17, 2008 inspection, the Inspector reviewed the Project's stormwater management system records and identified that no inspection records were available covering the period from June 2005 until October 30, 2007.

26. In response to the April 17, 2008 inspection, PDC submitted its stormwater management system inspection records to the Division on May 30, 2008. The Division performed an in-office review of the Project's stormwater management system inspection records and identified that PDC failed to inspect the Project at the required 14-day frequency, as follows:

Date of Inspection	Date of Next Inspection	Duration between inspections
3/7/06	3/23/06	16 days
3/23/06	4/14/06	22 days
5/31/06	6/15/06	15 days
7/13/06	8/3/06	21 days
9/7/06	10/2/06	25 days
10/2/06	10/18/06	16 days
4/27/07	5/30/07	33 days
5/30/07	6/14/07	15 days
8/8/07	8/23/07	15 days
8/23/07	9/7/07	15 days
9/27/07	10/30/07	33 days

27. During the April 17, 2008 inspection, the Inspector identified that the Project's stormwater management system inspection records did include a signed statement indicating the site is in compliance, as required by the 2007 Permit.

28. PDC's failure to conduct inspections of the Project's stormwater management system in accordance with the provisions of the 2002 and 2007 Permits constitutes violations of Part I. C. 5. a. of the 2002 Permit and Part I. D. 6. a. and Part I. D. 6. b. 2) of the 2007 Permit.

PDC's Position on Alleged Violations

29. PDC has quickly, efficiently, and effectively augmented what was already a strong stormwater program, including application of BMPs and other stormwater controls, by investing an exceptional amount of resources to implement a well-designed program to improve multi-faceted BMPs and other SWMP features along the entire reach of the Road. These efforts were taken to effectively address all issues raised during the Project inspection.

30. PDC is unaware of any exceedences of water quality standards in Parachute Creek or any other actual environmental harm associated with these alleged violations.

31. PDC is strongly committed to its stormwater program and has invested enormous financial, employee, management, and contractor resources to achieve and maintain compliance. This process was well underway prior to the inspection and has continued to accelerate since that time.

ORDER AND AGREEMENT

32. Based on the foregoing factual and legal determinations, pursuant to its authority under §§25-8-602 and 605, C.R.S., and in satisfaction of the civil penalties associated with the alleged violations cited herein and in the Notice of Violation / Cease and Desist Order (Number: SO-081203-1), the Division orders PDC to comply with all provisions of this Consent Order, including all requirements set forth below.

33. PDC agrees to the terms and conditions of this Consent Order. PDC agrees that this Consent Order constitutes a notice of alleged violation and an order issued pursuant to §§25-8-602 and 605, C.R.S., and is an enforceable requirement of the Act. PDC also agrees not to challenge directly or collaterally, in any judicial or administrative proceeding brought by the Division or by PDC against the Division:

    a. The issuance of this Consent Order;
    b. The factual and legal determinations made by the Division herein; and
    c. The Division's authority to bring, or the court's jurisdiction to hear, any action to enforce the terms of this Consent Order under the Act.

34. Notwithstanding the above, PDC does not admit to any of the factual or legal determinations made by the Division herein, and any action undertaken by PDC pursuant to this Consent Order shall not constitute evidence of fault or liability by PDC with respect to the conditions of the Project. PDC expressly reserves its rights to deny any of the Division's factual or legal determinations or defend itself in any other third party proceeding relating to the information identified in this Consent Order.

CIVIL PENALTY AND SUPPLEMENTAL ENVIRONMENTAL PROJECT

35. In addition to all other funds necessary to comply with the requirements of this Consent Order, PDC shall pay One Hundred Sixty Thousand Nine Hundred Twenty Dollars ($160,920.00) in the form of civil penalties and expenditures on a Supplemental Environmental Project ("SEP") in order to achieve settlement of this matter.

36. Based upon the application of the Division's Stormwater Civil Penalty Policy (January 25, 2007), and consistent with Departmental policies for violations of the Act, PDC shall pay One Hundred Four Thousand Nine Hundred Thirty Four Dollars and Fifty Cents ($104,934.50) in civil penalties. The Division intends to petition the Executive Director, or her designee, to impose the One Hundred Four Thousand Nine Hundred Thirty Four Dollars and Fifty Cent ($104,934.50) civil penalty for the above violation(s) and PDC agrees to make the payment within thirty (30) calendar days of the issuance of a Penalty Order by the Executive Director or her designee. Method of payment shall be by certified or cashier's check drawn to the order of the "Colorado Department of Public Health and Environment," and delivered to:

    Michael Harris
    Colorado Department of Public Health and Environment
    Water Quality Control Division
    Mail Code: WQCD-CAS-B2
    4300 Cherry Creek Drive South
    Denver, Colorado 80246-1530

37. PDC shall also perform the SEP identified below. PDC's total expenditure for the SEP shall be not less than Fifty Five Thousand Nine Hundred Eighty Five Dollars and Fifty Cents ($55,985.50).

38. PDC shall undertake the following SEP, which the Parties agree is intended to secure significant environmental or public health protection and improvements:

39. PDC shall donate Fifty Five Thousand Nine Hundred Eighty Five Dollars and Fifty Cents ($55,985.50) to the Town of Parachute. The funds will be used for a public drinking water intake water quality monitoring project in Garfield County, as further described in Attachment A. PDC shall make the payment of Fifty Five Thousand Nine Hundred Eighty Five Dollars and Fifty Cents ($55,985.50) and shall include with the donation a cover letter identifying the monies for the above-described project within thirty (30) days of the effective date of this Consent Order. PDC shall provide the Division with a copy of the cover letter and check within thirty (30) calendar days of the effective date of this Consent Order.

40. PDC shall not deduct the expenses associated with the implementation of the above-described SEP for any tax purpose or otherwise obtain any favorable tax treatment of such payment or project.

41. PDC hereby certifies that, as of the date of this Consent Order, it is not under any existing legal obligation to perform or develop the SEP. PDC further certifies that it has not received, and will not receive, credit in any other enforcement action for the SEP. In the event that PDC has, or will receive credit under any other legal obligation for the SEP, PDC shall pay Fifty Five Thousand Nine Hundred Eighty Five Dollars and Fifty Cents ($55,985.50) to the Division as a civil penalty within thirty (30) calendar days of receipt of a demand for payment by the Division. Method of payment shall be as specified in paragraph 36 above.

42. The SEP must be completed to the satisfaction of the Division by March 15, 2011 and must be operated for the useful life of the SEP. In the event that PDC fails to comply with any of the terms or provisions of this Consent Order relating to the performance of the SEP, PDC shall be liable for penalties as follows:

    a. Payment of a penalty in the amount of Fifty Five Thousand Nine Hundred Eighty Five Dollars and Fifty Cents ($55,985.50). The Division, in its sole discretion, may elect to reduce this penalty for environmental benefits created by the partial performance of the SEP.

    b. PDC shall pay this penalty within thirty (30) calendar days of receipt of written demand by the Division. Method of payment shall be as specified in paragraph 36 above.

43. PDC shall submit a SEP Completion Report to the Division by April 15, 2011. The SEP Completion Report shall contain the following information:

    a. A detailed description of the SEP as implemented;
    b. A description of any operating problems encountered and the solutions thereto;
    c. Itemized costs, documented by copies of purchase orders and receipts or canceled checks or other forms of proof of payment;
    d. Certification that the SEP has been fully implemented pursuant to the provisions of this Consent Order; and
    e. A description of the environmental and public health benefits resulting from implementation of the SEP, to the extent that such information is available to PDC.

44. Failure to submit the SEP Completion Report with the required information, or any periodic report, shall be deemed a violation of this Consent Order.

45. PDC shall include the following language in any public statement, oral or written, making reference to the SEP: "This project was undertaken in connection with the settlement of an enforcement action taken by the Colorado Department of Public Health and Environment for alleged violations of the Colorado Water Quality Control Act."

SCOPE AND EFFECT OF CONSENT ORDER

46. The Parties agree and acknowledge that this Consent Order constitutes full and final settlement of the civil penalties associated with the violations alleged herein and in the December 3, 2008, Notice of Violation / Cease and Desist Order (Number: SO-081203-1).

47. This Consent Order is subject to the Division's "Public Notification of Administrative Enforcement Actions Policy," which includes a thirty-day public comment period. The Division and PDC each reserve the right to withdraw consent to this Consent Order if comments received during the thirty-day period result in any proposed modification to the Consent Order.

48. This Consent Order constitutes a final agency order or action upon the date when the Executive Director or her designee imposes the civil penalty following the public comment period. Any violation of the provisions of this Consent Order by PDC, including any false certifications, shall be a violation of a final order or action of the Division for the purpose of §25-8-608, C.R.S., and may result in the assessment of civil penalties of up to ten thousand dollars per day for each day during which such violation occurs.

49. Notwithstanding paragraph 34 above, the violations described in this Consent Order will constitute part of PDC's compliance history for purposes where such history is relevant. This includes considering the violations described above in assessing a penalty for any subsequent violations against PDC. PDC agrees not to challenge the use of the cited violations for any such purpose.

50. This Consent Order does not relieve PDC from complying with all applicable Federal, State, and/or local laws in fulfillment of its obligations hereunder and shall obtain all necessary approvals and/or permits to conduct the activities required by this Consent Order. The Division makes no representation with respect to approvals and/or permits required by Federal, State, or local laws other than those specifically referred to herein.

LIMITATIONS, RELEASES AND RESERVATION OF RIGHTS AND LIABILITY

51. Upon the effective date of this Consent Order, and during its term, this Consent Order shall stand in lieu of any other enforcement action by the Division with respect to civil penalties for the specific instances of violations cited herein, in the December 3, 2008, Notice of Violation / Cease and Desist Order (Number: SO-081203-1), and the April 30, 2008 Compliance Advisory. The Division reserves the right to bring any action to enforce this Consent Order, including actions for penalties or the collection thereof, and/or injunctive relief.

52. This Consent Order does not grant any release of liability for any violations not specifically cited herein.

53. Nothing in this Consent Order shall preclude the Division from imposing additional requirements in the event that new information is discovered that indicates such requirements are necessary to protect human health or the environment.

54. Upon the effective date of this Consent Order, PDC releases and covenants not to sue the State of Colorado or its employees, agents or representatives as to all common law or statutory claims or counterclaims arising from, or relating to, the violations of the Act specifically addressed herein.

55. PDC shall not seek to hold the State of Colorado or its employees, agents or representatives liable for any injuries or damages to persons or property resulting from acts or omissions of PDC, or those acting for or on behalf of PDC, including its officers, employees, agents, successors, representatives, contractors, consultants or attorneys in carrying out activities pursuant to this Consent Order. PDC shall not hold out the State of Colorado or its employees, agents or representatives as a party to any contract entered into by PDC in carrying out activities pursuant to this Consent Order. Nothing in this Consent Order shall constitute an express or implied waiver of immunity otherwise applicable to the State of Colorado, its employees, agents or representatives.

Exhibit A

NOTICES

56. Unless otherwise specified, any report, notice or other communication required under the Consent Order shall be sent to:

For the Division:

Colorado Department of Public Health and Environment
Water Quality Control Division / WQCD-CAS-B2
Attention: Michael Harris
4300 Cherry Creek Drive South
Denver, Colorado 80246-1530
Telephone: 303.692.3598
E-mail: michael.harris@state.co.us

For PDC:

Mr. Scott Reasoner, Vice President of Operations
Petroleum Development Corporation
1775 Sherman Street, Suite 3000
Denver, Colorado 80203
Telephone: 303.860.5800
E-mail: screasoner@petd.com

MODIFICATIONS

57. This Consent Order may be modified only upon mutual written agreement of the Parties.

NOTICE OF EFFECTIVE DATE

58. This Consent Order shall be fully effective, enforceable and constitute a final agency action upon the date when the Executive Director or her designee imposes the civil penalty following closure of the public comment period referenced in paragraph 47. If the penalty as described in this Consent Order is not imposed, or an alternate penalty is imposed, this Consent Order becomes null and void

BINDING EFFECT AND AUTHORIZATION TO SIGN

59. This Consent Order is binding upon PDC and its corporate subsidiaries or parents, their officers, directors, employees, successors in interest, and assigns. The undersigned warrant that they are authorized to legally bind their respective principals to this Consent Order. In the event that a party does not sign this Consent Order within thirty (30) calendar days of the other party's signature, this Consent Order becomes null and void. This Consent Order may be executed in multiple counterparts, each of which shall be deemed an original, but all of which shall constitute one and the same Consent Order.

Exhibit A

FOR PETROLEUM DEVELOPMENT CORPORATION:

_____ Date: 11/5/12
Scott Reasoner, Vice President of Operations

FOR THE COLORADO DEPARTMENT OF PUBLIC HEALTH AND ENVIRONMENT:

Lori M Gerzina _____ Date: 11/12/10
Lori M. Gerzina, Manager
Compliance Assurance Section
WATER QUALITY CONTROL DIVISION

Exhibit A
Attachment A

SUPPLEMENTAL ENVIRONMENTAL PROJECTS (SEP) PROPOSAL

Enforcement Action Information	CDPHE / Water Quality Control Division Case No.: SO-081203-1
Regulated Entity Contact Information	Randall Ferguson Petroleum Development Corp. 1775 Sherman Street, Ste. 3000 Denver, CO 80203 303-860-5800 rferguson@petd.com
3rd Party SEP Recipient Contact	Mark King, Public Works Director Town of Parachute, CO 222 Grand Valley Way Parachute, CO 81635 970-285-7630 pwd01@parachutecolorado.com
CDPHE Contact Person	Michael Harris WQCD-CAS-B2 4300 Cherry Creek Drive South Denver, CO 80246 303-692-3598 michael.harris@state.co.us
Geographical Area to Benefit Most Directly From Project	Town of Parachute and Town of Battlement Mesa
Project Title	Public Water Intake Water Quality Monitoring
Project Type	Third Party SEP Donation
SEP Category	Environmental Protection
Project Summary	The purpose of the proposed Supplemental Environmental Project (SEP) is to provide water quality monitoring of the public water intake from the Colorado River for the Town of Parachute, Garfield County, Colorado, which supplies approximately 65% of Parachute's potable water needs. Specific instrumentation will be installed at the existing Water Plant to test for several potential contaminant parameters, and will be designed to automatically shut-down the water intake should any of these parameters exceed a specified event limit. The system will also have automatic sampling capabilities for possible laboratory analyses should an upset event be detected.

2015293.1

Project Description	The objective of the proposed SEP is to provide the Town of Parachute with the equipment to detect targeted water quality contaminants and the ability to protect the public water supply and the local citizens from the consequences of a potential release or spill of targeted water quality contaminants that may impact the Colorado River or its tributaries upstream from the intake point on the Colorado River at the Water Plant. A similar system has been operating in the Beaver Creek watershed public water supply for the City of Rifle. PDC has been coordinating with Jim Rada, Garfield County Health Manager, who is promoting the installation and operation of this type of monitoring system at all public water intake facilities. PDC has met with and has full support from the Town of Parachute for installation and operation of this water quality monitoring equipment. The proposed equipment includes individual sensor probes that will monitor for specific polycyclic aromatic hydrocarbons (oil in water), ph, turbidity, and conductivity. A Source Water Monitoring Panel houses the probes and a pump will supply the panel reservoir for the in-situ measurement of the parameters. The equipment is manufactured by the Hach Company, who will also assist the Town of Parachute with equipment installation and setup. General maintenance of the water quality monitoring system consists of: (1) sporadic wiping of the sensor's measurement window; (2) equipment calibration every two years; and (3) lamp replacement every four years. Town of Parachute personnel will be responsible for the system's periodic cleaning. PDC has included in the proposed SEP funding for a four year maintenance agreement with the Hach Company. The entire water quality monitoring system will be located in the existing Water Plant building that is regularly staffed by Town of Parachute personnel. The Town of Parachute will be responsible for the system upon delivery and installation. PDC will not be responsible for the equipment, operation of the system, or maintenance of the system other than the four year service contract included in the supplemental environmental project. Any water sample collection or laboratory analyses of such samples will solely be the responsibility of the Town of Parachute, which they have agreed to perform.
Expected Environmental and/or Public Health Benefits	The Colorado River water intake for Parachute, Colorado is the main source of the 21 total water sources and which supplies approximately 65% of the potable water needs for this Western Slope, Colorado town of over 1,000 residents . The intake is located approximately 100 feet immediately south of the town's water treatment facility, entering the site from a submerged pipe extending approximately 50 feet into the Colorado River. There are numerous industrial, agricultural and oil and gas operations situated upstream of this water intake location. The Town of Parachute and Garfield County have a vital interest in protecting their drinking water supplies from possible water quality contaminants that could potentially threaten public health and the viability of the water intake system.

The water quality monitoring system being proposed by PDC would give the town of Parachute the ability to detect undesirable events including oil in water (e.g. a diesel or produced water spill), changes in pH and conductivity (ionic concentrations), and increases in turbidity (a good indicator of some chemical compounds or increased bacterial levels). The system will be installed and calibrated in conjunction with the Parachute Public Works Department so that any specified increase or event associated with the above parameters would cause the system to notify the Plant Operators and/or shut off the water intake before the contaminant of concern enters the intake pumps at the plant.

The ability to detect and prevent deleterious constituents from entering the town's water supply system provides Parachute, Colorado with a significant tool to protect public infrastructure, health and welfare. Should an event be detected by this water quality monitoring system, the Town of Parachute has agreed to notify the WQCD, the Town of Battlement Mesa, and the Town of DeBeque.

Project Budget

Category	Description	Cost
Equipment[1]	Provided by the Hach Company	$37,849.00[2]
Service Contract	4 year contract w/the Hach Company	$18,136.50[3]
	Total:	**$55,985.50**

Project Schedule

Proposed Start Date:	November 15, 2010
PDC will conduct final project coordination and planning meetings with the HACH Company and the Town of Parachute Public Works Department.	As soon as possible following the approval of this application.
Equipment ordering and delivery.	As soon as possible, but no more than 30 days following the final project coordination meetings described above.
Equipment installation and calibration.	Within 30 days of receipt of equipment pending coordination of schedules with the HACH Company and the Town of Parachute.
Projected Completion Date:	March 15, 2011

[1] The primary HACH equipment includes a source water monitoring panel with a pre-configured sc1000 Controller Probes to detect the following parameters: (1) pH; (2) Conductivity; (3) Turbidity (Soltex); and (4) Oil in Water. Please see attached Data Sheets for both the Water Quality Monitoring Panel and Oil in Water Probe.
[2] Please see attached HACH Quote.
[3] Please see attached HACH Quote.

	SEP Completion Report Due:	Will be submitted with 30 days of project completion.
Reporting	Project reports will provide sufficient information for the department to monitor the project implementation status, to verify and document the proper expenditure of SEP funds, and to evaluate the effectiveness and benefits of the SEP. A full expense accounting, including proof of all payments, will be provided in the SEP Completion Report. The SEP Completion report will contain: • A detailed description of the project as implemented; • A description of any operating problems encountered and the solutions thereto; • Itemized costs, documented by copies of purchase orders and receipts or canceled checks; • Certification and demonstration that the SEP has been fully implemented pursuant to the provisions of the Consent Order; and • A description of the environmental and public health benefits resulting from implementation of the SEP, to the extent that such information is available to PDC.	
Other Relevant Information	Please review the additional technical data regarding the proposed equipment, which PDC has attached to this SEP Proposal and addresses the water quality monitoring panel and oil in water probe.	
Has the applicant entered into any prior commitments to fund this project, voluntary or otherwise? If yes, please explain.	No.	

Attachment A

Source Water Monitoring Panel

- *Continuously monitor the quality of your incoming Source Water*
- *Anticipate changes to the treatment process that are needed to react to storms, algal blooms, industrial discharge, chemical spills, reservoir stratification/destratification, construction activity, sewage spills and other natural or man-made occurrences*
- *Improve process control—make necessary changes to your chemical quantities before the water enters your plant*
- *Improve your response time to changes in your incoming water*
- *Improve taste and odor problems*
- *Test up to six different parameters in one common trough, saving space and effort*
- *One controller for all sensors*
- *Can upgrade system with TOC analyzer or auto-sampler*

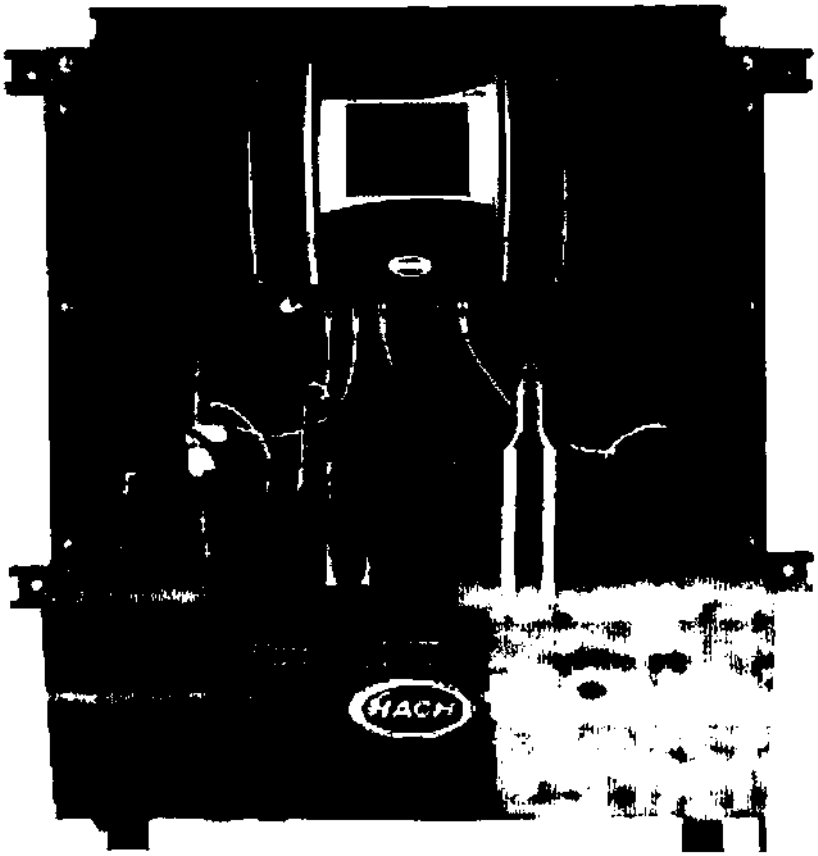

Source waters can be vulnerable to an accidental or intentional contaminant events. Monitoring an input water source can provide useful information to the Drinking Water Plants that process incoming water. Plants can shut their intake down should their Source Water Panel parameters change significantly.

Features and Benefits

- *Single sample inlet*
- *Single sample drain*
- *Single power supply*
- *Easy to install—hint: ensure you have a representative sample*
- *MODBUS 485 protocol for easy digital communications*
- *Easy to clean—simply unscrew top and wipe out or flush sample trough*

Reservoirs and other source water sites are easy to access—instances have occurred all over the world where diesel fuel or other contaminant spilled in to the drinking water supply for a community, shutting down their drinking water supply.

Recent Examples of Source Water Contamination

Incident	Source of Contamination	Country
Contaminated river shut water supply down for 4 days; schools shut down	chemical blast	China
Strychnine found in Reservoir, shut down reservoir	unknown	Denmark
7500 gallons of diesel spilled in river	tanker truck crashed	USA
15000 liters of diesel in river, direct source of valleys' entire drinking water	tanker truck crashed	Afghanistan
diesel oil in River	unknown	USA
13000 liters of diesel into river shutting down drinking water plant	auto workshop	New Zealand
Alum overflow from DWP—Alum delivery professionals overfilled Alum tank and excess went into river	drinking water plant	USA
Terrorist contaminant intentionally injected into river, shutting down DWP	terrorists	USA

Parameters Used to Mo[illegible]

Parameter	Product to Measure	Rational
Organics	UVAS sc probe, 2mm	Useful for season changes and accidental spills of organic nature
Ammonium	NH4D	May indicate presence of pesticides or other biological degradation of organic matter
pH	pH sensor, Ryton	Acid/base relationships within water
Conductivity	Conductivity Inductive	May indicate presence of ionic species; measures the total ionic concentration in water
ORP	ORP Sensor	May indicate sudden changes for oxidative or reducing species introduced into the water
Turbidity, High Range	SOLITAX™ t-line	May indicate some chemical compounds or increased bacterial levels (can measure suspended solids as well if proper Prod. No. ordered)
Dissolved Oxygen, Luminescent	LDO	Sudden change may indicate toxic conditions that effect algal respiration or increased levels of bacteria using up the oxygen
Level	Level	Useful with SWP trough
Nitrate	NITRATAX™ plus sc 5 mm	Nutrient level within water; agricultural runoff

Attachment A

Specifications*

Source Water Panel

Dimensions
31" x 29"

Inlet Dimension
3/8 FNPT supplied with 1/2 OD tubing quick connect fitting

Drain (Outlet) Dimension
3/4 FNPT supplied with 3/4 barb fitting

Flow Required
Up to 4,000 mL/minute

Minimum Flow Requirement
900 mL/minute

Sample Pressure
20 – 80psig

Power
90-240 Vac for use worldwide

Certifications
UL/CSA/CE Compliant

Mounting
Wall or rack

Weight
85 lbs

Data Logging
about 28 days; first in, first out

Probes hold accuracy specifications.

sc1000™ Controller

The Source water panel that comes with a pre-determined pre-configured sc1000 controller that offers exactly what is needed to make the sc1000 work well in this application. 1 Relay; 485 ModBus outputs; 2 Analog inputs; 5 sensor input

Ambient Conditions
Operation: -20 to 55°C (-4 to 131°F);
0 to 95% relative humidity, non-condensing
Storage: -20 to 70°C (-4 to 158°F);
0 to 95% relative humidity, non-condensing

Power Requirements
100 to 230 Vac, 50/60 Hz
Power: 75 W
Optional: 24 Vdc

Display
1/4 VGA graphical backlit TFT color touch screen
Resolution: 320 x 240 pixels

Relays
Up to four SPDT, user-configurable contacts rated 100 to 230 Vac, 5 Amp resistive maximum, per probe module. Additional relays are available via digital network connection.

Outputs
Up to 12 analog 0/4-20 mA, maximum impedance 500 Ohms per probe module.

Additional analog outputs are available via digital network connection.

Optional digital communications via MODBUS® (RS-485) or PROFIBUS DP.

Inputs
Up to 12 analog 0-20 mA, maximum impedance 500 Ohms per probe module.

Additional inputs are available via digital network connection.

Control
PID, high/low phasing, setpoint, deadband, overfeed timer, off delay, and on delay

Alarms
Low alarm point, low alarm point deadband, high alarm point, high alarm point deadband, off delay, and on delay

Communication (Optional)
MODBUS® (RS-485): Advanced communications/networking with PLC or SCADA system directly from analyzer.

PROFIBUS DP

GSM cellular module (FCC approval pending.)

Ethernet service port (standard)

Memory Backup
All user settings are retained indefinitely in memory (non-volatile) (EEPROM)

Mounting Configurations
Surface, panel, and pipe (horizontal and vertical)

Enclosure
IP65; ABS (display module) and metal (probe module) enclosure with corrosion-resistant finish

Dimensions
Probe module with attached display module:
315 x 250 x 142 mm (12.4 x 9.8 x 5.6 in.)

Weight
Approximately 6.5 kg (14.3 lbs.) depending on configuration

Certifications
cTUVus to UL 61010A-1 and CSA C22.2 No. 1010.1
TUV-GS to EN 61010-1
CE per 73/23/EEC and 89/336/EEC

**Specifications subject to change without notice.*

Attachment A

Dimensions

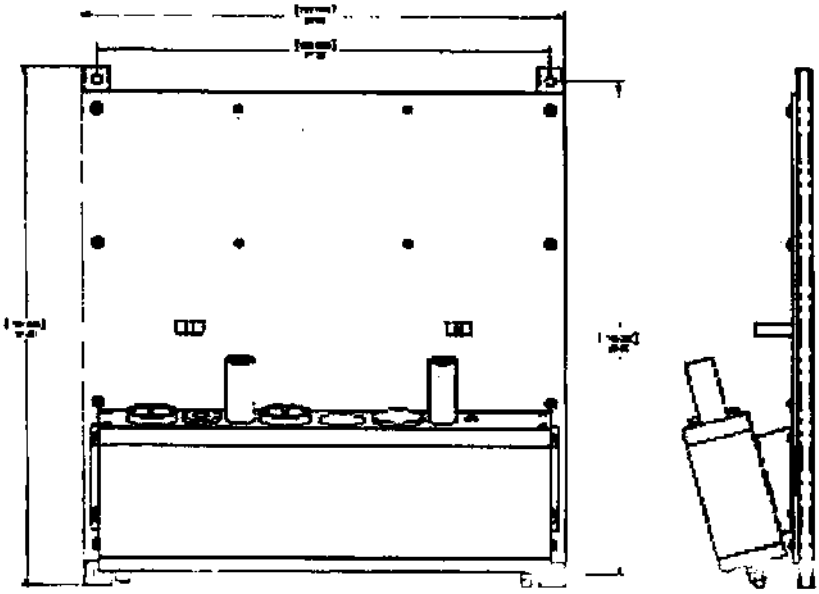

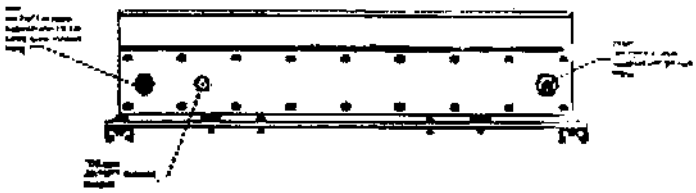

At Hach, it's about learning from our customers and providing the right answers. It's more than ensuring the quality of water - it's about ensuring the quality of life. When it comes to the things that touch our lives...

Keep it pure.

Make it simple.

Be right.

For current price information, technical support, and ordering assistance, contact the Hach office or distributor serving your area.

In the United States, contact:

HACH COMPANY World Headquarters
P.O. Box 3
Loveland, Colorado 80539-0389
U.S.A.
Telephone: 800-604-3493
Fax: 970-669-2932
E-mail: orders@hach.com
www.hachhst.com

Ordering Information

Contact your local sales representative for ordering.

Hach Homeland Security Technologies focuses on the development of innovative and breakthrough technologies that can be used to detect contamination events, terrorist activity, and improve general operational control in both water and air.

Lit. No. 2610
B61 Printed in U.S.A.

©Hach Company, 2008. All rights reserved.
In the interest of improving and updating its equipment, Hach Company reserves the right to alter specifications to equipment at any time.

HACH®

Homeland Security Technologies

Attachment A

Hach FP 360 sc Oil-in-Water Continuous Online Monitoring Sensor

Oil-In-Water

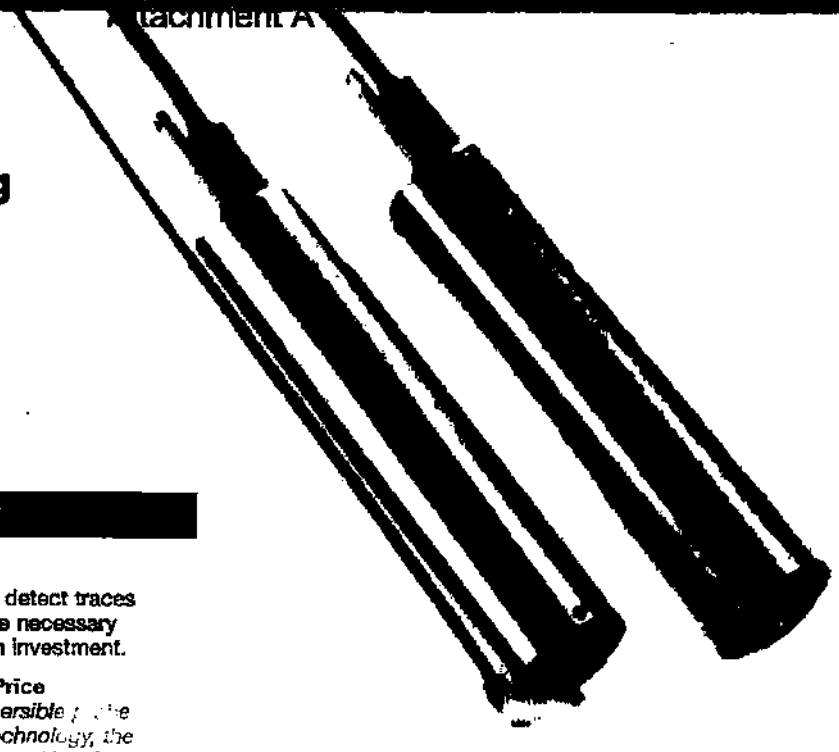

The FP 360 sc is the only online oil-in-water instrument that delivers the highest sensitivity and selectivity with the lowest total cost of ownership.

Features and Benefits

Lowest Cost of Ownership

The FP 360 sc is specifically designed to detect traces of mineral oils in water while providing the necessary value and benefits for a positive return on investment.

- **The Right Technology for the Right Price**
  Due to its unique combination of submersible probe design and UV fluorescence sensing technology, the FP 360 sc delivers the best technology and is priced below competitive UV fluorescent instruments to detect oil in water.
- **Minimal Maintenance**
  The FP 360 sc has no tubes, pumps, or valves that can foul or require constant maintenance interventions. Maintenance is limited to occasional wiping of the sensor's measurement window, calibration once every two years, and Xenon lamp replacement every four years.
- **Reduced Laboratory Testing**
  While laboratory testing is the ultimate method of measuring oil in water, it is a long and complex process that requires special equipment and trained lab personnel. The FP 360 sc provides a cost-effective, continuous on-line monitoring solution to maintain process control and avoid oil contamination with minimal laboratory testing.

High Sensitivity and Selectivity

The FP 360 sc can detect and measure polycyclic aromatic hydrocarbons (PAHs) from 1 ppb to up to 5000 ppb (µg/L). This is approximately equivalent to a concentration of mineral oil between 0.1 to 150 ppm (mg/L). Furthermore, the FP 360 sc method of detection makes it impervious to interferences by turbid water or natural organic and biological matter that impact online light scattering, UV absorbance, and VIS fluorescence instruments.

Designed for Harsh Conditions

The FP 360 sc is available in stainless steel or titanium housing to provide oil-in-water measurement in the harshest of conditions.

Full Featured "Plug and Play" with Hach Digital Controllers

There's no complicated wiring or set up procedures with the Hach family of controllers. Just plug the sensor to any Hach digital controller and it's ready to use because it's "plug and play."

- **One to Eight Sensors**
  The Hach Digital Controller Family can receive data from up to eight Hach digital sensors, including oil-in-water, suspended solids, turbidity, pH/ORP, dissolved oxygen, conductivity, ammonium, phosphate, SAC, and nitrate in any combination.
- **Wide Range of Communications**
  Multiple alarm/control schemes are available using relays and current output contracts from the sc controller. Communications use analog 4-20mA and digital MODBUS®/RS485, MODBUS®/RS232, and MODBUS® TCP/IP protocols. Other digital protocols are also available.

DW = drinking water *PW = pure water / power*
E = environmental *FB = food and beverage*

HACH®

Be Right™

Specifications*

Measurement Method
UV fluorescence method for polycyclic aromatic hydrocarbons (PAH)

Light Source
Miniature xenon flashlamp with interference filter

Detector
UV photodiode with interference filter; Compensation of daylight and flashlamp intensity fluctuations

Excitation Wavelength
254 nm

Measurement Wavelength
360 nm

Measuring Range
Low Measuring Range:
0–50 ppb (µg/L) and 0–500 ppb (µg/L) (PAH)**
0.1–1.5 ppm (mg/L) and 0.1–15 ppm (mg/L) (oil)**

High Measuring Range:
0–500 ppb (µg/L) and 0–5,000 ppb (µg/L) (PAH)**
0.1–15 ppm (mg/L) and 0.1–150 ppm (mg/L) (oil)**

Resolution
0.1 ppb (µg/L) (PAH) in the lowest measuring range
Limit of Detection (LOD) is 1 ppb (PAH)

Reproducibility
2.5% of measured value at constant temperature

Response Time
10 s (T90)

Calibration
Factory calibrated with UV fluorescence standard or process calibration with results of a grab sample analysis.

Sample Temperature
33.8 to 104°F or 1 to 40°C

Pressure Range
Max. 30 bar or 435 psia (measurement probe)

Housing
Stainless steel 316Ti (1.4571) or titanium

Dimensions
2.68" x 12.05" or 68 x 306 mm
(D x H; without connector and suspension pin)

Weight
Stainless Steel: 6.2 lbs or 2.8 kg
Titanium: 4 lbs or 1.8 kg

***With Calibration Standard.*

**Specifications subject to change without notice.*

Engineering Specifications

1. The oil-in-water probe comes with a rugged corrosion resistant metal housing and that allows for continuous submersed operation.
2. The oil-in-water probe shall be a continuous-reading sensor that utilizes a UV-fluorescence technology with excitation at 254 nm and emission detection at 360 nm wavelength.
3. The measurement range shall be 0 to 5,000 ppb in relation to PAH calibration standard, corresponding to 0.1 to 150 ppm of oil, depending on model.
4. The response time (T90) shall be 10s or less. Limit of Detection is 1 ppb of PAH or less.
5. The sensor shall be equipped with a stain resistant measuring window.
6. The sensor shall compensate for the interference effects of ambient light and UV lamp output fluctuations.
7. The sensor shall provide reagent-free operation without the requirements of sample conditioning in the range from 0 to 200 ppm total suspended solids.
8. The sensor shall be compatible with optional Hach air blast cleaning system.
9. The sensor shall be warranted for one full year against defects in material and workmanship.
10. The sensor shall be the FP 360 sc UV Fluorescence Sensor for oil-in-water detection and measurement, manufactured by Hach Company.

Dimensions

Figure 1 shows the sensor without the cleaning unit. Figure 2 shows the sensor with the cleaning unit.

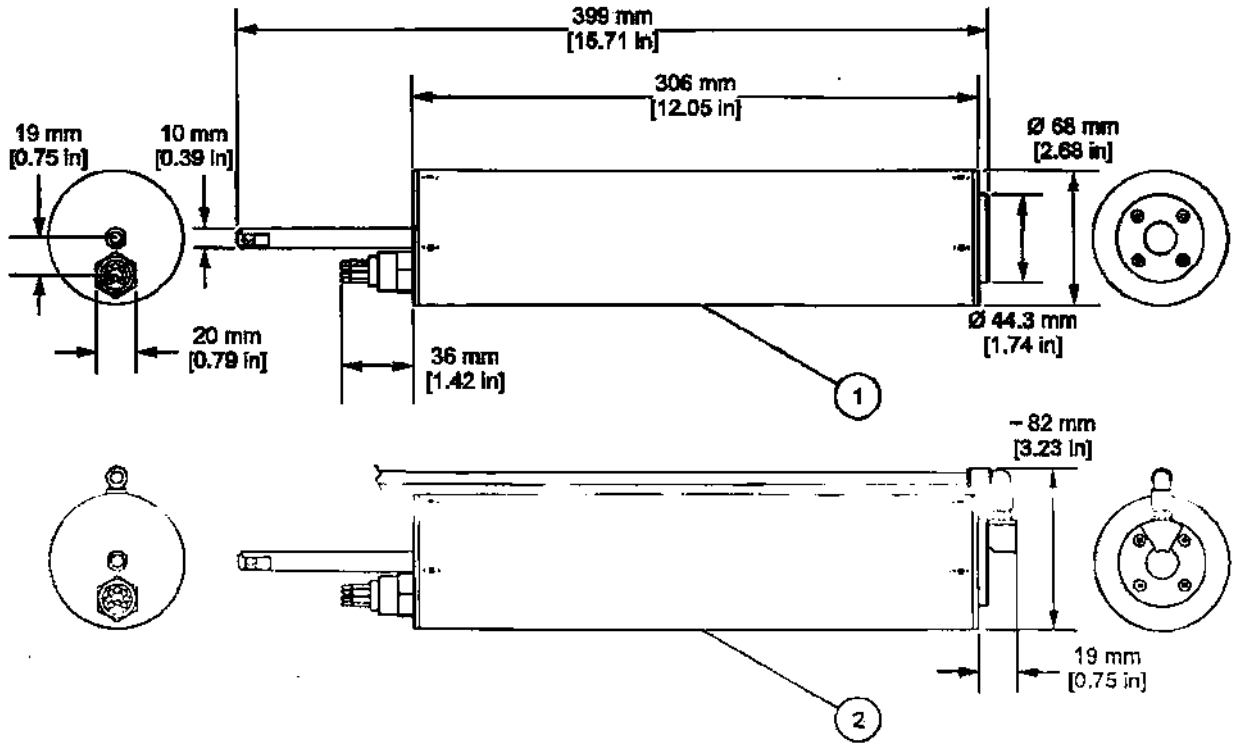

Principle of Operation

The FP 360 sc measures intensity of fluorescence light at a wavelength of 360 nm emitted by polycyclic aromatic hydrocarbons (PAH) after UV irradiation of the sample at 254 nm. Since PAHs are components of most mineral oils, the FP 360 sc can detect the presence of oil contamination in surface, process, or industrial waters. In addition, since the intensity of the emitted light is proportional to the PAHs concentration, the FP 360 sc can be calibrated to measure oil concentration in stable matrices.

Ordering Information

LXV441.99.11100	**0–500 µg/L, stainless steel, 32.8 ft or 10 m cable without cleaning unit**
LXV441.99.11200	**0–500 µg/L, stainless steel, 32.8 ft or 10 m cable with cleaning unit**
LXV441.99.11300	**0–500 µg/L, stainless steel, 5 ft or 1.5 m cable without cleaning unit**
LXV441.99.12100	**0–500 µg/L, titanium, 32.8 ft or 10 m cable without cleaning unit**
LXV441.99.12200	**0–500 µg/L, titanium, 32.8 ft or 10 m cable with cleaning unit**
LXV441.99.12300	**0–500 µg/L, titanium, 5 ft or 1.5 m cable without cleaning unit**
LXV441.99.21100	**0–5,000 µg/L, stainless steel, 32.8 ft or 10 m cable without cleaning unit**
LXV441.99.21200	**0–5,000 µg/L, stainless steel, 32.8 ft or 10 m cable with cleaning unit**
LXV441.99.21300	**0–5,000 µg/L stainless steel, 5 ft or 1.5 m cable without cleaning unit**
LXV441.99.22100	**0–5,000 µg/L, titanium, 32.8 ft or 10 m cable without cleaning unit**
LXV441.99.22200	**0–5,000 µg/L, titanium, 32.8 ft or 10 m cable with cleaning unit**
LXV441.99.22300	**0–5,000 µg/L, titanium, 5 ft or 1.5 m cable without cleaning unit**

Note: Probes with cleaning unit cannot be operated in combination with the flow cell, Product Number: LZY669.

Recommended Accessories

Mounting Hardware:

LZX914.99.11110	SS chain mounting set
LZY669	Flow cell with mounting panel

To complete your Oil-in-Water measurement system, choose from these Hach controllers...

Model sc100 Controller

(see Lit. #2463)

The Model sc100 Controller receives data from one or two sensors. Its "plug and play", mix-and-match operation lets it fit into any facility or workflow. Digital communication with any Hach digital sensor or probe is simple and reliable.

Model sc1000 Controller

(see Lit. #2403)

Get the same great features as the sc100 Controller above—"plug and play", all digital operation and communication—but with the Hach sc1000 Controller, up to eight Hach sensors can be used with one controller in any combination. The sc1000 Controller is also expandable and upgradeable to easily adapt to your needs.

Lit. No. 2588
L9 Printed in U.S.A.
©Hach Company, 2009. All rights reserved.
In the interest of improving and upgrading its equipment, Hach Company reserves the right to alter specifications to equipment at any time.

At Hach, it's about learning from our customers and providing the right answers. It's more than ensuring the quality of water—it's about ensuring the quality of life. When it comes to the things that touch our lives...

Keep it pure.

Make it simple.

Be right.

For current price information, technical support, and ordering assistance, contact the Hach office or distributor serving your area.

In the United States, contact:

HACH COMPANY World Headquarters
P.O. Box 389
Loveland, Colorado 80539-0389
U.S.A.
Telephone: 800-227-4224
Fax: 970-669-2932
E-mail: orders@hach.com
www.hach.com

[illegible] customers in Canada, Latin America, sub-Saharan Africa, Asia, and Australia/New Zealand, contact:

HACH COMPANY World Headquarters
P.O. Box 389
Loveland, Colorado 80539-0389
U.S.A.
Telephone: 970-669-3050
Fax: 970-461-3939
E-mail: intl@hach.com
www.hach.com

In Europe, the Middle East, and Mediterranean Africa, contact:

HACH LANGE GmbH
Willstätterstraße 11
D-40549 Düsseldorf
GERMANY
Tel: +49 (0) 211 5288-0
Fax: +49 (0) 211 5288-143
E-mail: info@hach-lange.de
www.hach-lange.com

HACH®

Be Right™

Exhibit A

Attachment A

Quotation/ProForma Invoice

Date 06/11/2010

Be Right™

HACH COMPANY
Headquarters
P.O. Box 389
5600 Lindbergh Drive,
Loveland, CO 80539-0389

Purchase Orders
PO Box 608
Loveland, CO 80539-0608
Web Site: www.hach.com

U.S.A.
Phone: 800-227-4224
Fax: 970-669-2932
Email: orders@hach.com
quotes@hach.com
techhelp@hach.com
Export
Phone: 970-669-3050
Fax: 970-461-3939
Email: intl@hach.com

Remittance
2207, Collections Center Drive
Chicago, IL 60693

Wire Transfers
Bank of America
231 S. LaSalle St.
Chicago, IL 60604
Account 8765602385
Routing (ABA) : 026009593
Swift Code: BOFAUS3N

Quote Number 309201202 **Version Number** 0
(USE QUOTE Number at time of order to ensure you receive prices quoted).

Customer Ref	QUOTE SWMP
Second Customer Ref	
Third Customer Ref	
Payment Terms	Subject to Credit Review
Currency	USD
Freight Terms	Prepay And Bill Customer
Ship Method	MF-MF**Motor Freight- -Ground
Quote Date	06/10/2010
Expiration Date	08/09/2010
Hach Sales Contact	HERB FANCHER
Customer Number	40155067
Quote Contact	RANDALL FERGUSON
Phone	3038313904
Fax	
E-Mail	RFerguson@petd.com

Bill-To Account

1253588
PETROLEUM DEVELOPMENT CORPORATION

1775 SHERMAN STREET
SUITE 3000

DENVER,CO,80203
United States

Ship-To Account

1253590
PETROLEUM DEVELOPMENT CORPORATION

1775 SHERMAN STREET
SUITE 3000

DENVER,CO,80203
United States

Deliver-To Account

Line	Item No	Description	Quantity	Unit Price	Extended Amount
1.1	580800	HACH ENGINEERED SYSTEMS MODIFICATION OF: Additional Info: SOURCE WATER MONITORING PANEL CONSISTING OF PH PROBE, SOLITAX PROBE, AND CONDUCTIVITY PROBES. SC1000 LXV402.99.02002	1	13,471.00	13,471.00
1.1	FSPSPECIAL	*Fld Srv-Special,REQUIRES APPROVAL Additional Info: TWO YEAR SERVICE CONTRACT	1	9,068.25	9,068.25
1.1	PMTRAVEL2	2 On-site PM visits	1	1,200.00	1,200.00

Exhibit A

Attachment A

Quotation/ProForma Invoice

Date 06/11/2010

		Unit price includes -100.00% discount Additional Info: TWO ON SITE VISITS PER YEAR FOR A TOTAL OF TWO YEARS			
2.1	580801	HACH ENGINEERED SYSTEMS MODIFICATION OF: Additional Info: LXV441.99.11302-FP360sc PROBE	1	14,990.00	14,990.00
3.1	8756800	*Multi purpose half cable 7 pin, 25 ft	1	90.00	90.00
4.1	YAB019	CARD, 4mA OUTPUTS, SC1000 INTERNAL	1	500.00	500.00
5.1	8927SD	SD900 Refrigerator Sampler 115VAC, 60Hz, vinyl refrig. includes controller 8971SD,power 8754500US Transition plate and refrigerator, 000298HY grease, 8753800 pump tubing DOC026.53.00799 manual, and DOC016.53.00799 quick ref. card. *NRD 6963400, 6963500	1	3,914.00	3,914.00
6.1	RF240350	Bottle Kit, 24-350mL glass, Refrig Kit includes: 732 bottle set, 1511 bottle tray, 1056 retainer, and 856 distributor. #NRD 6963600	1	875.00	875.00
7.1	920	25 ft. vinyl intake tubing, 3/8 in. ID	1	45.00	45.00
8.1	926	Strainer, Teflon/stainless steel	1	72.00	72.00
10.1	4668000	Bubble Trap/Head Regulator	1	292.00	292.00
11.1	580802	HACH ENGINEERED SYSTEMS MODIFICATION OF: Additional Info: SAMPLE SUPPLY PUMP	1	1,200.00	1,200.00

Merchandise Total: $45,717.25
Total: $45,717.25

NOTES :

Shipping and/or handling charges are applicable only if routed through carriers and /or forwarders selected by Hach Company.
Additional charges may be added for certain heavy/large items shipping to US Destinations.

Your Order Total is $25,000 or more, please send a confirming purchase order to address or fax number above.

TERMS AND CONDITIONS
THANK YOU FOR YOUR QUOTE REQUEST. PLEASE NOTE:

Exhibit A

Attachment A

Quotation/ProForma Invoice

Date 06/11/2010

MOST ITEMS ARE AVAILABLE WITHIN 30 DAYS AFTER RECEIPT OF PURCHASE ORDER. ITEMS IN STOCK WILL SHIP WITHIN 48 HOURS.

PRICES QUOTED ARE VALID ONLY FOR ORDERS BILLING-SHIPPING WITHING THE USA, NOT ULTIMATE EXPORT.

THIS QUOTATION DOES NOT INCLUDE FREIGHT CHARGES. PLEASE REFER TO THE ENCLOSED FREIGHT SCHEDULE, WHICH IS BASED ON THE TOTAL DOLLAR AMOUNT PER SHIPMENT.

SHIPPING TERMS ARE FOB SHIPPING POINT. CUSTOMERS ARE RESPONSIBLE FOR PAYING FREIGHT CHARGES ON ORDERS. NORMALLY FREIGHT IS PREPAID AND ADDED TO YOUR INVOICE. IF YOU CHOOSE NOT TO HAVE YOUR SHIPMENT SENT PREPAID, PLEASE CONTACT CUSTOMER SERVICE AT 1-800-227-4224 SO ARRANGEMENTS CAN BE MADE TO SEND FUTURE ORDERS FREIGHT COLLECT.

Due to International regulations, a U.S. Department of Commerce Export License may be requi[illegible]. Hach **reservers the right to** approve **specific** shipping a[illegible] [illegible] suitable [illegible] extra. Specify final **destination to ensure** prop[illegible] documentation and packing suitable for Inter[illegible] **transport. In addition, Hach may require : 1).** A statement of **intended end-use; 2).** Certification that the **intended end-use does not relate to proliferation** of weapons of mass destruction (prohibited nuclear end-**use, chemical / biological** weapons, missile technology); and 3). Certification that the goods will not be diverted contrary to U.S. law.

PAYMENT TERMS ARE SUBJECT TO CREDIT REVIEW. SALES/USE TAXES ARE SUBJECT TO CHANGE. **Taxes will be added at time of order for** orders shipping and used in US Destinations, unless valid **resale/exemption certificate** is **provided.** Exemption certificate can be sent to the above address or fax **number.**

Carol Burrill

Signed:

Hach Hydromet	Hach Flow Products & Services	Environmental Test Systems (ETS)	Other Hach Brands
800-949-3766	800-368-2723	800-548-4381	800-464-0263
Fax: 970-461-3921	Fax: 301-874-8459	Fax: 574-264-4533	Fax: 970-461-3919