ATTACHMENT 4
SEDIMENT TRAP DETAILS

ATTACHMENT 4-1

SEDIMENT TRAP CONCRETE DESIGN

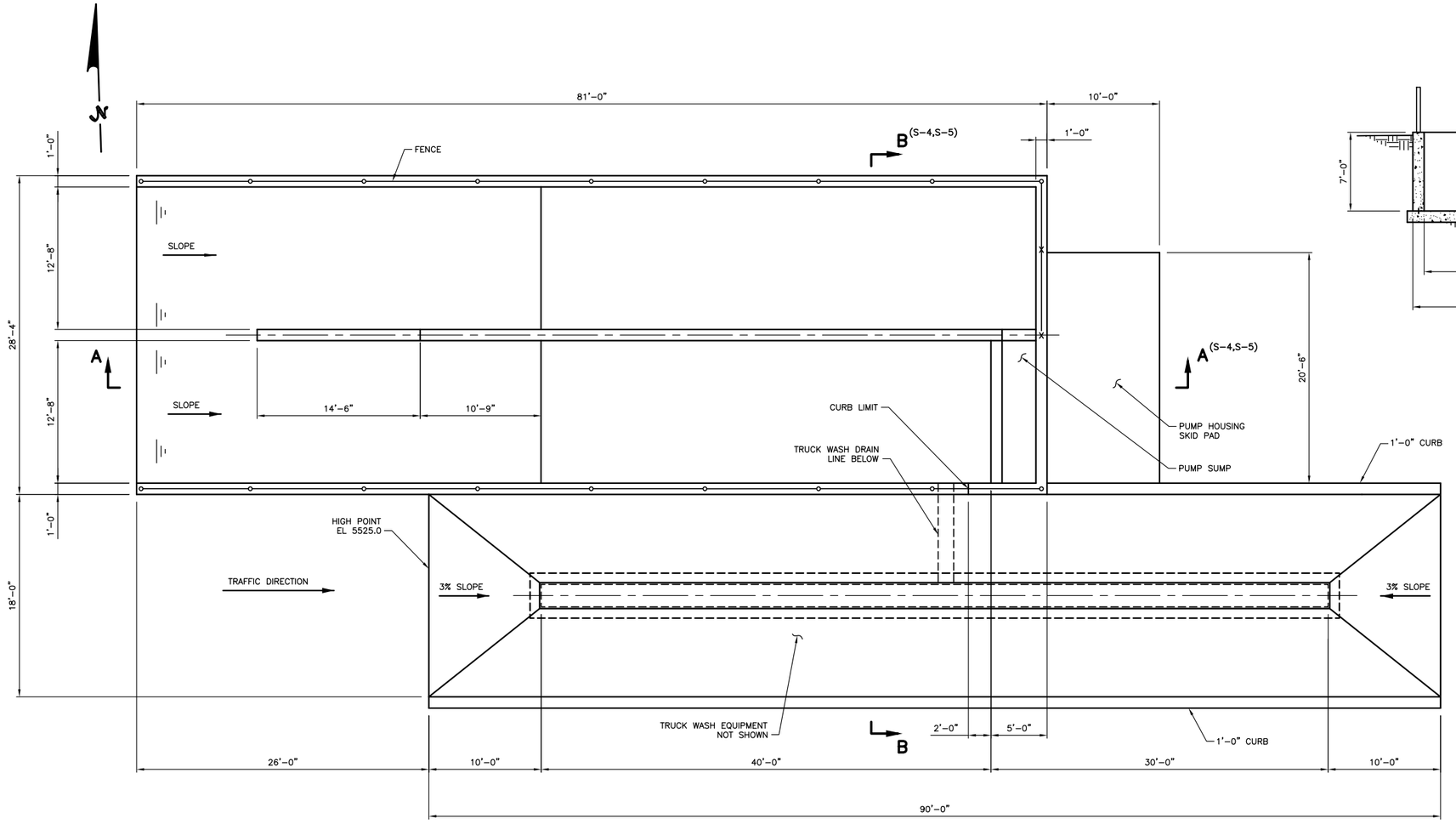

PLAN
SCALE: 3/16"=1'-0"

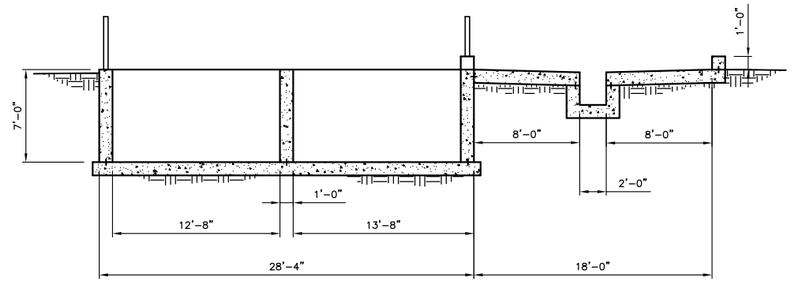

SECTION B–B
SCALE: 3/16"=1'-0"

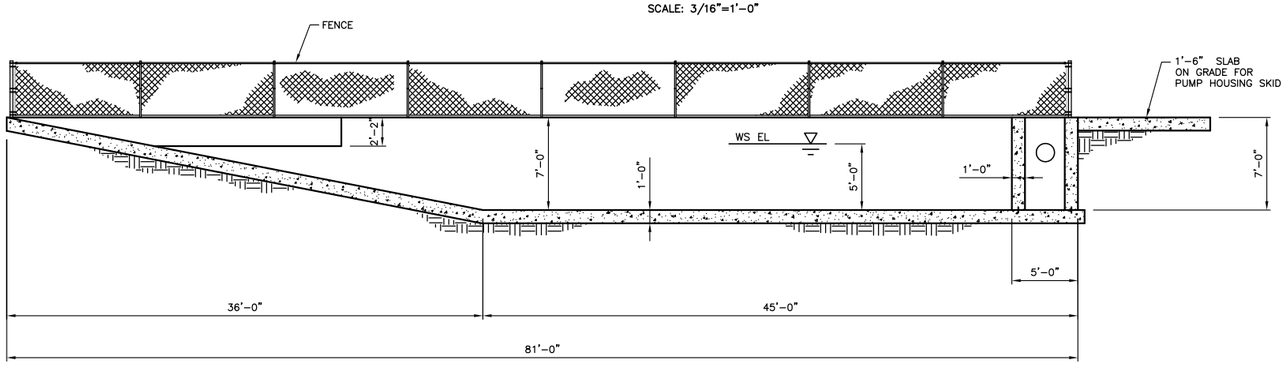

SECTION A–A
SCALE: 3/16"=1'-0"

NOTES:

1. SEE DRAWING S-1 FOR GENERAL NOTES, ABBREVIATIONS AND LEGEND.

REVISIONS			
REV	DATE	DESCRIPTION	APPRVD BY

0 1/2 1 2
2" AT FULL SIZE
SCALE ACCORDINGLY

CONSULTANTS:
SM&RC Structural Engineers Inc.
215 S. Wadsworth Blvd., Suite 320
Lakewood, CO 80226
ph 303.274.8656
fax 303.484.3777
THESE DRAWINGS ARE NOT BE ALTERED WITHOUT THE EXPRESS WRITTEN PERMISSION OF SM&RC STRUCTURAL ENGINEERS, INC.

CLIENT:
ENERGY FUELS RESOURCES CORPORATION
44 Union Blvd., Suite 600
Lakewood, CO 80228-1815
303-974-2140

PIÑON RIDGE MILL
MONTROSE COUNTY, COLORADO
TRUCK WASH AND SEDIMENT CONTAINMENT OUTLINE PLAN AND SECTIONS

SMRC PROJECT NO. EFR-2010-02
DESIGN BY: MW
DRAWN BY: RC
CHECKED BY: DAB
DRAWING NO. S-4
SHEET: of

Z:\SMRC Projects\Energy Fuels Resources\Pinon Ridge CDPHE\dwgs\S-4 and S-5.dwg, 9/24/2010 2:05:11 PM, Adobe PDF

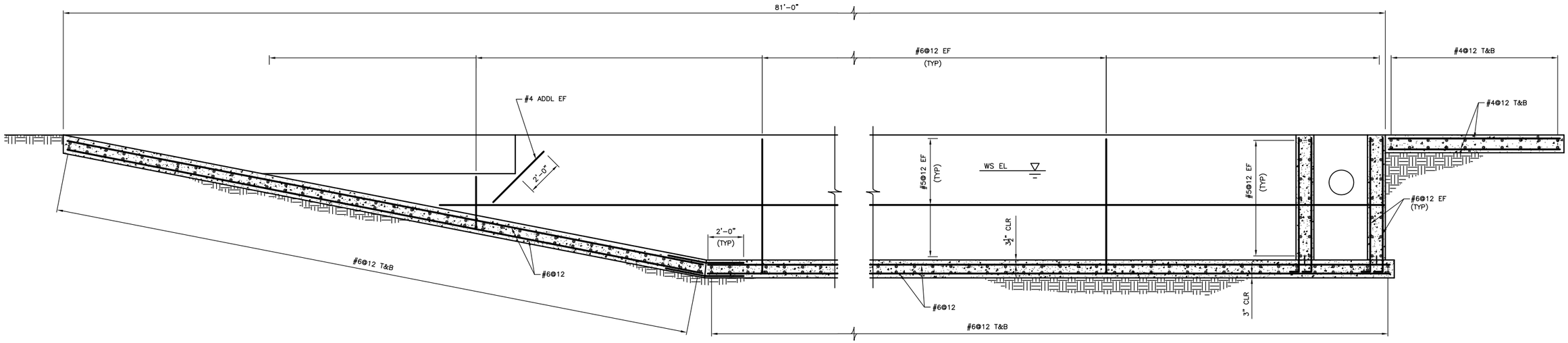

SECTION A–A (S–4)
SCALE: 3/8"=1'-0"

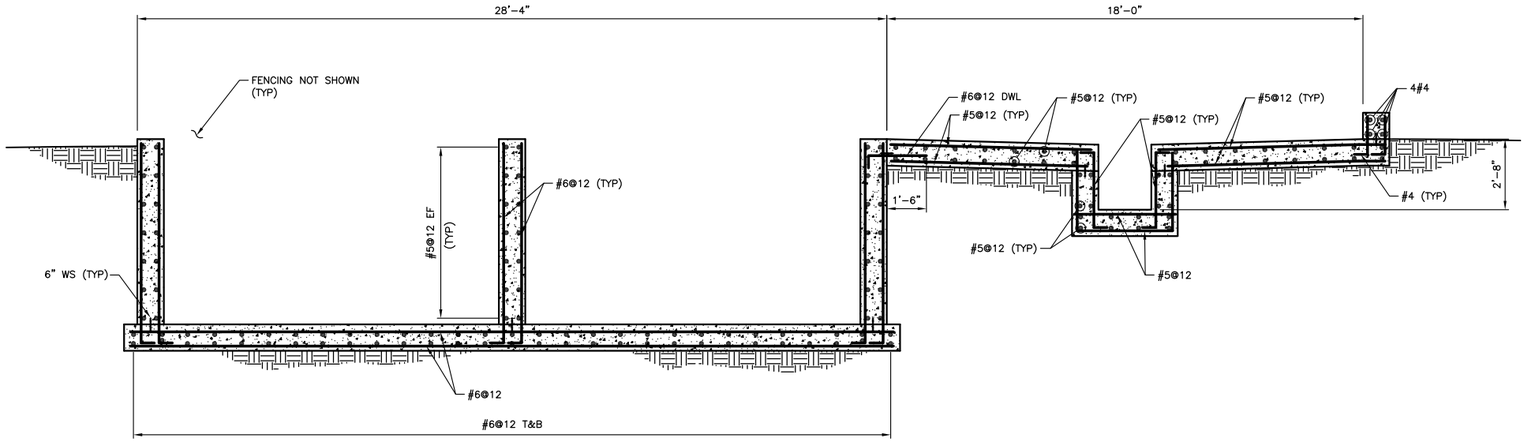

SECTION B–B (S–4)
SCALE: 3/8"=1'-0"

NOTES:

1. SEE DRAWING S–1 FOR GENERAL NOTES, ABBREVIATIONS AND LEGEND.

REVISIONS			
REV	DATE	DESCRIPTION	APPRVD BY

0 1/2 1 2
2" AT FULL SIZE
SCALE ACCORDINGLY

CONSULTANTS:
SMRC Structural Engineers Inc.
215 S. Wadsworth Blvd., Suite 320
Lakewood, CO 80226 ph 303.274.8656 fax 303.484.3777

THESE DRAWINGS ARE NOT BE ALTERED WITHOUT THE EXPRESS WRITTEN PERMISSION OF SMRC STRUCTURAL ENGINEERS, INC.

CLIENT:
ENERGY FUELS RESOURCES CORPORATION
44 Union Blvd., Suite 600
Lakewood, CO 80228–1815
303–974–2140

PIÑON RIDGE MILL
MONTROSE COUNTY, COLORADO
TRUCK WASH AND SEDIMENT CONTAINMENT REINFORCEMENT PLAN AND SECTIONS

SMRC PROJECT NO.	DRAWING NO.
EFR–2010–02	S–5
DESIGN BY: MW	
DRAWN BY: RC	
CHECKED BY: DAB	SHEET: * OF

Z:\SMRC Projects\Energy Fuels Resources\Pinon Ridge CDPHE\dwgs\S-4 and S-5.dwg, 9/23/2010 8:42:24 AM, Adobe PDF

ATTACHMENT 4-2

TRUCK WASH MANUFACTURER OPERATIONS AND MAINTENANCE MANUAL

HEAVY DUTY TIRE WASH
Falconbridge, QC, Canada

Heavy Mud removal Truck Wash System

Operation And Maintenance Manual

3939 Bestech Drive
Ypsilanti, MI 48197
Phone: 734-975-2967 or 800-468-3725 (USA and Canada)
Fax: 734-975-1646
Email: sales@interclean.com or techsupport@interclean.com
website address: www.interclean.com

OPERATIONS AND MAINTENANCE MANUAL
TABLE OF CONTENTS
FALCONBRIDGE, QC, CANADA

Tab	Description
Operations	
	Sequence of Operation
	I/O Assignment Charts
	PLC Pre-Startup Checklist
Electrical System Information	
	Alarm Light Sequence
	Riser Diagrams
	Master Panel Schematics
System Maintenance	
	Preventive Maintenance Schedule
	Equipment Lubrication Instructions
	System Warranty
	Factory Service
	RMA Guidelines
Layout Drawings	
Manufacturer Equipment Information	
	Arches
AR-1	Side Spray Bar Ass'y
AR-2	Tire Wash Frame Ass'y
	Pumps
P-1	Pump - Pulsatron
P-2	Sump Pump – 6.5" & 7"
P-3	Transfer Pump
	Sensors
VS	M-GAGE Detection Sensor Ass'y
	Valves
MV	Float Level Switch, Pit Low and Pit Fill
	Miscellaneous
MISC	Air Compressor
	Tire Guides
	Light Ass'y Fluorescent
	Air Conditioner

OPERATIONS AND MAINTENANCE MANUAL
TABLE OF CONTENTS
FALCONBRIDGE, QC, CANADA

Tab	Description
	Master Panel
	Distribution Panel
	Equipment Container
	Splash Wall
	InterScreen

Falconbridge, Rouyn, QC, Canada
Tire Washer Type A
Sequence of Operations

Automatic Operations

On power up the system checks all input and reacts according to their states. The following sequence of operation describing how the system reacts to these input devices listed above. If an alarm is during power up or normal operation the red light on the panel door will flash in sequence. (Refer to the **Alarm Light Sequence Chart** to determine the fault.

Automatic Wash Operations

1. When a vehicle enters the wash bay and activates the entrance sensor, the wash cycle will begin. The system energizes the 2M (20hp motor contactor) then two seconds later the 3M (20hp motor contactor). If the Overload's trip or are in an OFF position an alarm will be triggered. As a vehicle clears the entrance sensor, the wheel wash pump(s) Off Delay Timer is activated keeping sprays on for the length of time programmed into timer (typically 15 seconds).

2. As the vehicle passes through the wash bay and activates the exit sensor (optional), before the Off Delay Timer has expired, the system will hold the wheel wash pump(s) on even if the Off Delay Timer expired during this time. As the vehicle clears the exit sensor and the Off Delay Timer has expired, the wheel wash pump(s) will de-energize. The wheel wash pumps have a maximum cycle timer of four minutes that de-energizes the pump(s) and triggers an alarm if they do not de-energize within the set time.

3. After every fifth wash cycle, the system will energize the Air Purge Solenoid(s) and backwash the Interscreen located in the settling pit.

4. The panel includes controls and logic for a circulation pump (optional) to help eliminate pit odors. When the water in the settling pit is at a level to activate the Pit Low Level Float 1M (2 hp motor contactor) it will be energized and remain energized unless the water in the settling pit decreases to a level to deactivate the Pit Low Level Float. If this option is not being utilized, the overload will need to be in the ON position or an alarm will be triggered.

5. The panel also includes a relay (3CR) and logic to control a Bio-Remediation pump (optional). (3CR) Will mirror the circulation pump.

6. The panel also includes a relay (4CR) and logic to control a Polymer pump (optional) MP2 sensor inputs. (4CR) Will mirror the wheel wash pumps.

Falconbridge, Rouyn, QC, Canada
Tire Washer Type A
Sequence of Operations

Pit Fill Operations

1. When the water in the settling pits decreases or is at a level to activate the Pit Fill Level Float and deactivate the Pit Low Level Float the system will go in to Pit Fill Mode. The Pit Fill Solenoid (optional) will be energized. This has a maximum cycle timer of 240minute that de-energized the Pit Fill Solenoid and triggers an alarm if the Pit Floats do not change their states with in set time.

2. When the water in the settling pit increases or is at a level to activate the Pit Low Level Float the system will go in to a Pit Fill Run Mode and will automatically reset the Pit Low Level Alarm. (If no other alarms are present the system is now ready for use.) The Pit Fill solenoid remains energized. This has a maximum cycle timer of 30minute that de-energized the Pit Fill Solenoid and triggers an alarm if the Pit Fill Level Float does not change states with in set time.

3. When the water in the settling pit increases to a level to deactivate the Pit Fill Level Float the Pit Fill Solenoid will de-energize.

Automatic System Shutdown

If an alarm occurs during power up or normal operation, the red light on the panel door will flash in sequence. Refer to the **Alarm Light Sequence Chart** to determine the fault.

Alarms

Start Signal During Power Up

If a START signal for the automatic wash is present during system Power Up or e-stop deactivation and it is due to either an object blocking the photo eyes or the photo eyes being out of alignment, an alarm will activate and all wash operations will be disabled. This is used to prevent unwanted or accidental system activation. This alarm will need to be reset manually.

Pit Low Level

If the water in the settling pit decreases to a level that would deactivate the bottom, low-level float for more than three seconds, the pit low-level alarm will be activated. All automatic wash cycle operations are disabled except for pill fill operations. This is necessary to protect the sump (wheel wash) pumps.

When the water in the settling pit increases to a level that would activate the low level float, the pit low-level alarm will automatically be reset and the wash cycle can resume.

Falconbridge, Rouyn, QC, Canada
Tire Washer Type A
Sequence of Operations

Pit Solenoid Maximum Cycle Timer

If a condition exists that inhibits the water in the settling pit from increasing to a level to activate the top fill level float causing the pit fill solenoid valve to remain energized for more than 480 minutes, the pit fill solenoid valve maximum cycle timer alarm will activate. All automatic wash cycle operations are disabled. This alarm will need to be reset manually.

Sump Pump Maximum Cycle Timer

If a condition exists that would make the sump (wheel wash) pumps run for more that 10 minutes, the sump pump maximum cycle timer alarm will activate. All automatic wash cycle operations are disabled except tank fill operations. This alarm will need to be reset manually.

Sump Pump Motor Overload

If either of the sump pump motor contactors fails to send a signal indicating that the motor contactors have energized, the Sump Pump Motor Overload alarm will activate. All automatic wash cycle operations are disabled. This alarm will need to be reset manually.

Circulation Pump Motor Overload

If the circulation pump motor contactor fails to send a signal indicating that the motor contactor has energized, the Circulation Pump Motor Overload alarm will activate. All automatic wash cycle operations are disabled. This alarm will need to be reset manually.

3CB, 4CB or 5CB Tripped

If circuit breakers 3, 4, or 5 trip, an alarm will be activated. These circuit breakers control output that run critical devices like the sump pump. All automatic and manual wash operations will be deactivated. This alarm will need to be reset manually.

MP1 I/O Assignment Chart

	Tire Washer Panel, Type A	Date	Produced by
PLC	171CCS700000	10/06/06	Ken McPherson
Inputs	Unit no.: 1 Model: ADM 350 10	Outputs	Unit no.: 1 Model: ADM 350 10
Row 1	P6	Row 2	P7
1	Vehicle sensor (entrance)	1	Air Purge solenoid valve 1
2	Vehicle sensor (exit)	2	Pit Fill Strobe Light
3	Pit Low level float	3	Air Purge solenoid valve 2
4	Pit Fill level float	4	Spare
5		5	
6		6	
7		7	
8		8	Pilot Light on door (red)
9		9	Circulation pump motor contactor (1M)
10		10	Sump pump motor contactor (2M)
11	3CB- 4CB- 5CB auxiliary contacts	11	Sump pump motor contactor (3M)
12	1M – auxiliary contact	12	Spare control relay (1CR)
13	2M – auxiliary contact	13	Spare control relay (2CR)
14	3M – auxiliary contact	14	Spare control relay (3CR) Bio-pump
15		15	Spare control relay (4CR) Poly-pump
16	1MCR – 2 (E-Stop)	16	
17	-24VDC	17	+24VDC
18	+24VDC	18	+24VDC

MP2 I/O Assignment Chart

	Tire Washer Panel, Type A	Date	Produced by
PLC	171CCS700000	10/06/06	Ken McPherson
Inputs	Unit no.: 1 Model: ADM 350 10	Outputs	Unit no.: 1 Model: ADM 350 10
Row 1	P6	Row 2	P7
1	Vehicle sensor input from MP1	1	Air Purge solenoid valve 1
2	Vehicle sensor input from MP1	2	Pit Fill Strobe Light
3	Pit Low level float	3	Air Purge solenoid valve 2
4	Pit Fill level float	4	Spare
5		5	
6		6	
7	Alt. Off timer input (3 sec.)	7	
8		8	Pilot Light on door (red)
9		9	Circulation pump motor contactor (1M)
10		10	Sump pump motor contactor (2M)
11	3CB- 4CB- 5CB auxiliary contacts	11	Sump pump motor contactor (3M)
12	1M – auxiliary contact	12	Spare control relay (1CR)
13	2M – auxiliary contact	13	Spare control relay (2CR)
14	3M – auxiliary contact	14	Spare control relay (3CR) Bio-pump
15		15	Spare control relay (4CR) Poly-pump
16	1MCR – 2 (E-Stop)	16	
17	-24VDC	17	+24VDC
18	+24VDC	18	+24VDC

Falcon, Rouyn, QC, Canada
Tire Washer Type A, MP1
PLC System
Pre-start-up Checklist

General:

1. Correct Amperes setting must be set on all overloads. Refer to Motor nameplates to find actual Amp. Ratings
2. Check that the Processor Adapter has been installed on the TSX Momentum I/O Base. If the Processor Adapter has not been installed make sure power is off to the programmable controller and proceed to install the Processor Adapter by gently pressing in the tabs located on either end of the unit. ***Warning!*** Never install with power applied to the programmable controller.
3. Insure all 120 volt and 24volt circuit breakers are turned on and apply power to the electrical control panel. DO NOT TURN ON MOTOR OVERLOAD AT THIS TIME.
4. Check the programmable controller (PLC) that the "RUN" light is green on the CPU.
5. The input devices wired to the programmable controller must be checked to verify that the proper signals are being sent. Please follow the Banner Inductive Sensor Configuration procedure. The input signal checklist below will aid in checking the type of signal required from the various input devices. Note that if the incoming signals are not correct the automatic wash functions will not operate correctly.
6. Prime 2Hp and 20Hp pumps with water before first use.
7. Turn on Motor Overloads and check all Motors for proper rotations.

Input Checklist for TSX MOMENTUM, MP1:

Input address	Description	Sensor Cleared	Sensor Blocked
6.01	Vehicle Sensor Entrance	Bit off	Bit on
6.02	Vehicle Sensor Exit	Bit off	Bit on

Input address	Description	Pit empty	Pit full
6.03	Reclaim pit low level float (1FS)	Bit off	Bit on
6.04	Reclaim pit fill level float (2FS)	Bit on	Bit off

Input address	Description	Off position	On position
6.11	Circuit Breaker Auxiliary 3CB,4CB,5CB	Bit off	Bit on

Input address	Description	Energized	De-Energized
6.12	(1M) 2HP Motor Contactor	Bit on	Bit off
6.13	(2M) 20HP Motor Contactor	Bit on	Bit off
6.14	(3M) 20HP Motor Contactor	Bit on	Bit off

Input address	Description	Engaged	Disengaged
6.16	Master panel emergency stop button	Bit off	Bit on

Falcon, Rouyn, QC, Canada
Tire Washer Type A, MP2
PLC System
Pre-start-up Checklist

General:

1. Correct Amperes setting must be set on all overloads. Refer to Motor nameplates to find actual Amp. Ratings
2. Check that the Processor Adapter has been installed on the TSX Momentum I/O Base. If the Processor Adapter has not been installed make sure power is off to the programmable controller and proceed to install the Processor Adapter by gently pressing in the tabs located on either end of the unit. ***Warning!*** Never install with power applied to the programmable controller.
3. Insure all 120 volt and 24volt circuit breakers are turned on and apply power to the electrical control panel. DO NOT TURN ON MOTOR OVERLOAD AT THIS TIME
4. Check the programmable controller (PLC) that the "RUN" light is green on the CPU.
5. The input devices wired to the programmable controller must be checked to verify that the proper signals are being sent. MP1 will need to powered in order for MP2 outputs to fuction. The input signal checklist below will aid in checking the type of signal required from the various input devices. Note that if the incoming signals are not correct the automatic wash functions will not operate correctly.
6. Prime 20Hp pumps with water before first use.
7. Turn on Motor Overloads and check all Motors for proper rotations.

Input Checklist for TSX MOMENTUM, MP2:

Input address	Description	Sensor Cleared	Sensor Blocked
6.01	Vehicle Sensor input from MP1	Bit off	Bit on
6.02	Vehicle Sensor input from MP1	Bit off	Bit on

Input address	Description	Pit empty	Pit full
6.03	Reclaim pit low level float (1FS)	Bit off	Bit on
6.04	Reclaim pit fill level float (2FS)	Bit on	Bit off

Input address	Description	Off position	On position
6.11	Circuit Breaker Auxiliary 3CB,4CB,5CB	Bit off	Bit on

Input address	Description	Energized	De-Energized
6.12	(1M) 2HP Motor Contactor	Bit on	Bit off
6.13	(2M) 20HP Motor Contactor	Bit on	Bit off
6.14	(3M) 20HP Motor Contactor	Bit on	Bit off

Input address	Description	Engaged	Disengaged
6.16	Master panel emergency stop button	Bit off	Bit on

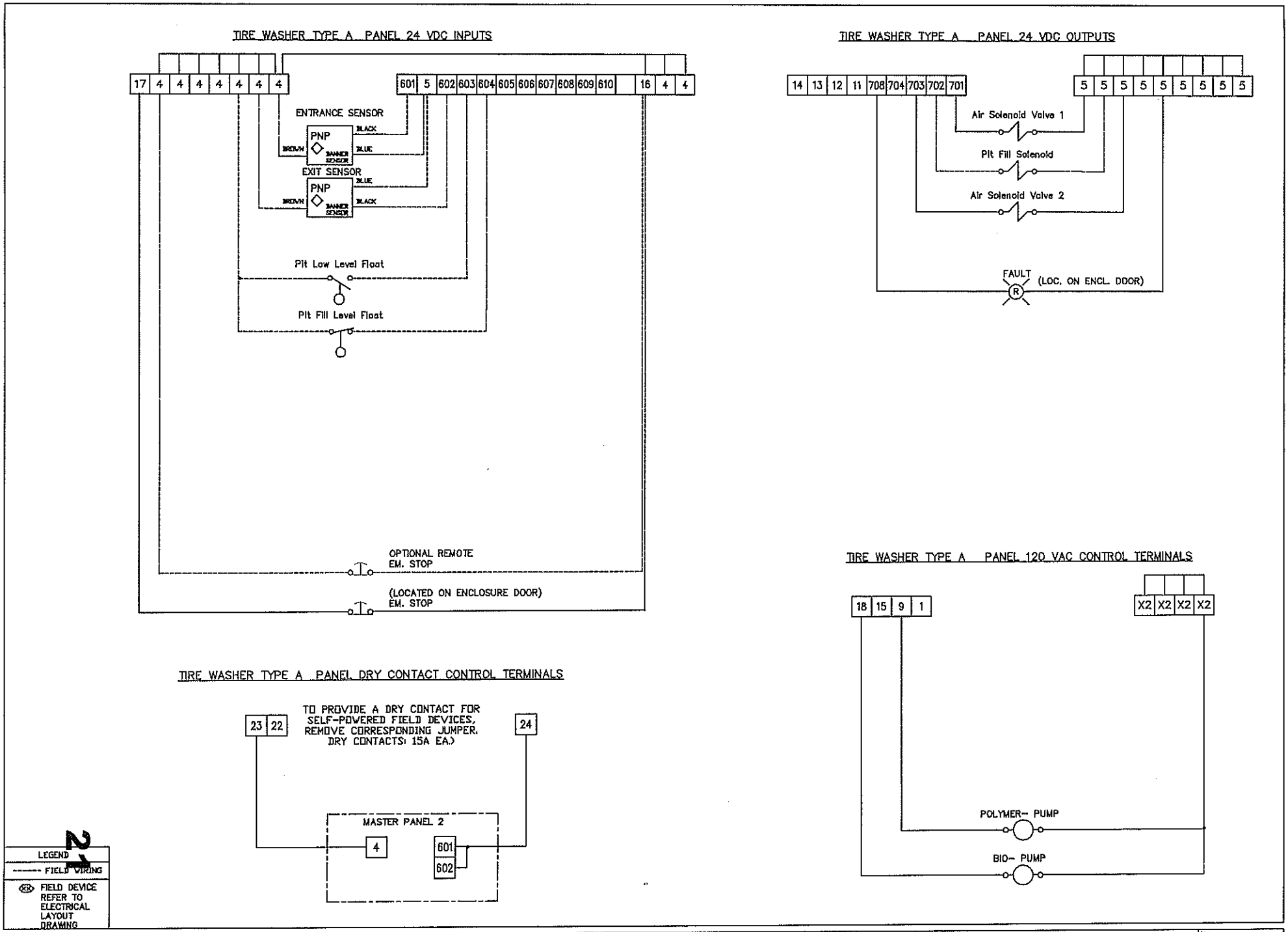

1	10/02/06	POLYMER PUMP CHANGED TO TERMINAL 9	KM
REV	DATE	DESCRIPTION	APP

InterClean Equipment, Inc.

DRAWN	KM
CHECKED	
APPROVED	
SCALE	

FALCONBRIDGE LTD, ROUYN, CANADA
HEAVY DUTY TIRE WASH, MASTER PANEL 1
RISER DIAGRAM

DATE 10/02/06

TIRE WASHER TYPE A PANEL 24 VDC INPUTS

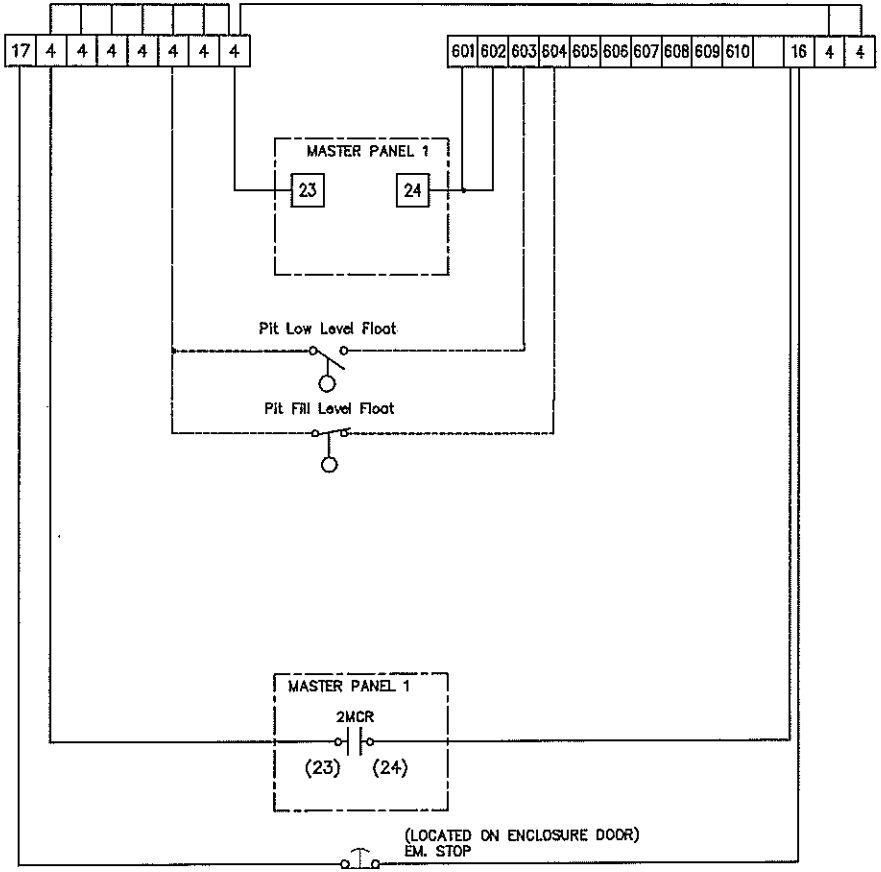

TIRE WASHER TYPE A PANEL 24 VDC OUTPUTS

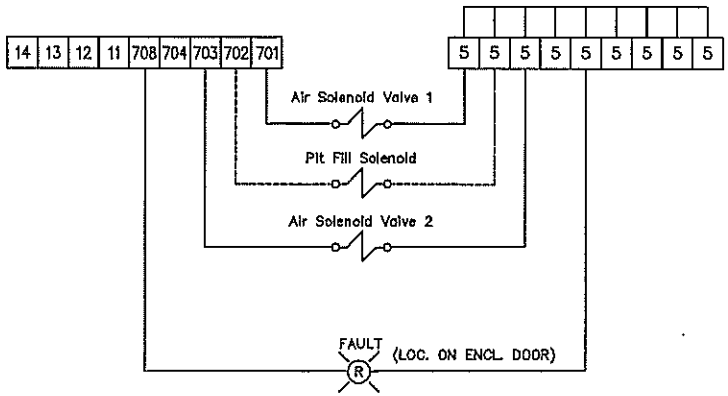

TIRE WASHER TYPE A PANEL 120 VAC CONTROL TERMINALS

LEGEND

FIELD WIRING

FIELD DEVICE REFER TO ELECTRICAL LAYOUT DRAWING

REV	DATE	DESCRIPTION	APP

InterClean Equipment, Inc.

DRAWN	KM
CHECKED	
APPROVED	

FALCONBRIDGE LTD, ROUYN, CANADA
HEAVY DUTY TIRE WASH, MASTER PANEL 2
RISER DIAGRAM

DATE 10/02/06

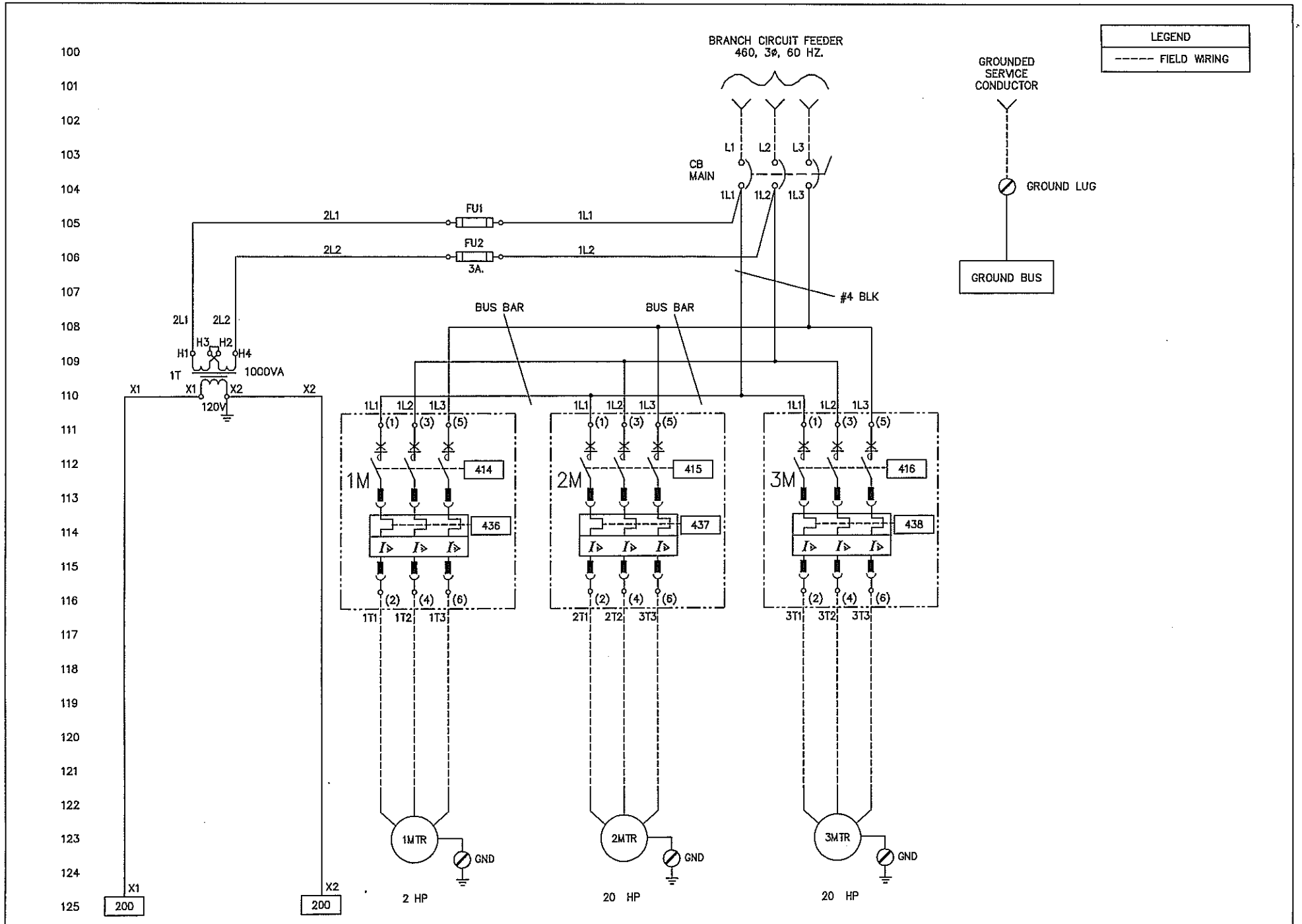

REV	DATE	DESCRIPTION	APP
B	07/07/03	IN-LINE STARTERS, PVC ENCLOSURE CHANGED	KM
A	06/24/03	I/O MODIFICATION	KM

InterClean Equipment, Inc.

UNSPECIFIED DIMENSIONS:	
XX:	±1/16
XXX:	±.005
XXXX:	±.0005
ANGLES:	±1°

DRAWN BY: KM
ENGINEER:
APPROVED:
MFG:

TIRE WASHER PANEL
TYPE A
ELECTRICAL SCHEMATIC

DATE: 07/05/01
DWG: DY02-452_2

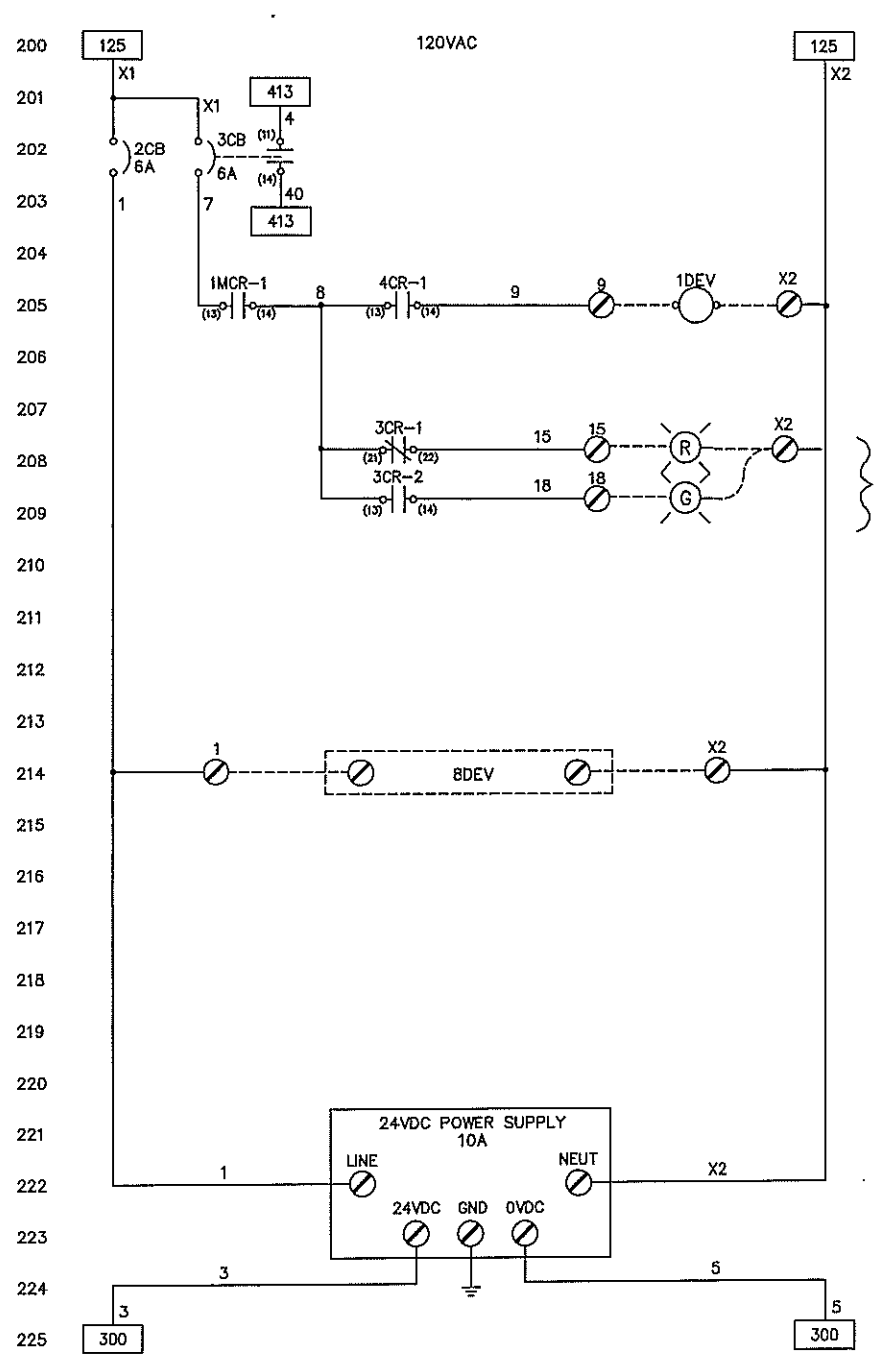

1DEV IS TYPICALLY:
INJECTOR PUMP, SIREN, TRAFFIC LIGHT, PILOT LIGHT, BEACON, EXIT DOOR CONTROL, SOLENOID VALVE. MAY BE USED FOR OTHER 120VAC LOADS.
(200W EA.)

TYPICALLY USED BY RED & GREEN TRAFFIC LIGHTS. MAY BE USED BY OTHER 120VAC LOADS.
(75W)

LEGEND

----- FIELD WIRING

REFERENCE A

INPUT / OUTPUT MODULE

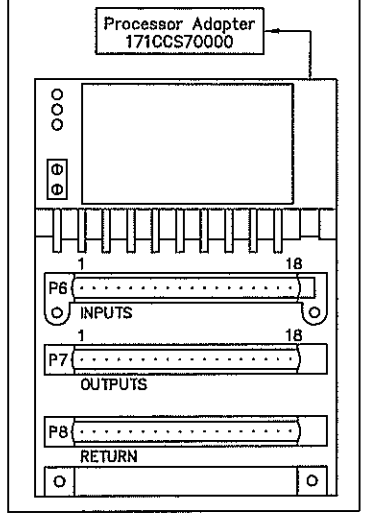

REV	DATE	DESCRIPTION	BY
B	07/09/03	I&I LINE STARTERS, P/S, ENCLOSURE CHANGED	KM
A	01/24/03	I/O MODIFICATION	KM

InterClean Equipment, Inc.

UNSPECIFIED DIMENSIONS: XX: ±1/64, .XXX: ±.005, .XXXX: ±.0005, ANGLE: ±1°

DRAWN BY: K M

CHECKED

SCALE

TIRE WASHER PANEL
TYPE A
ELECTRICAL SCHEMATIC

DATE 07/05/01

DWG DY02-452_3

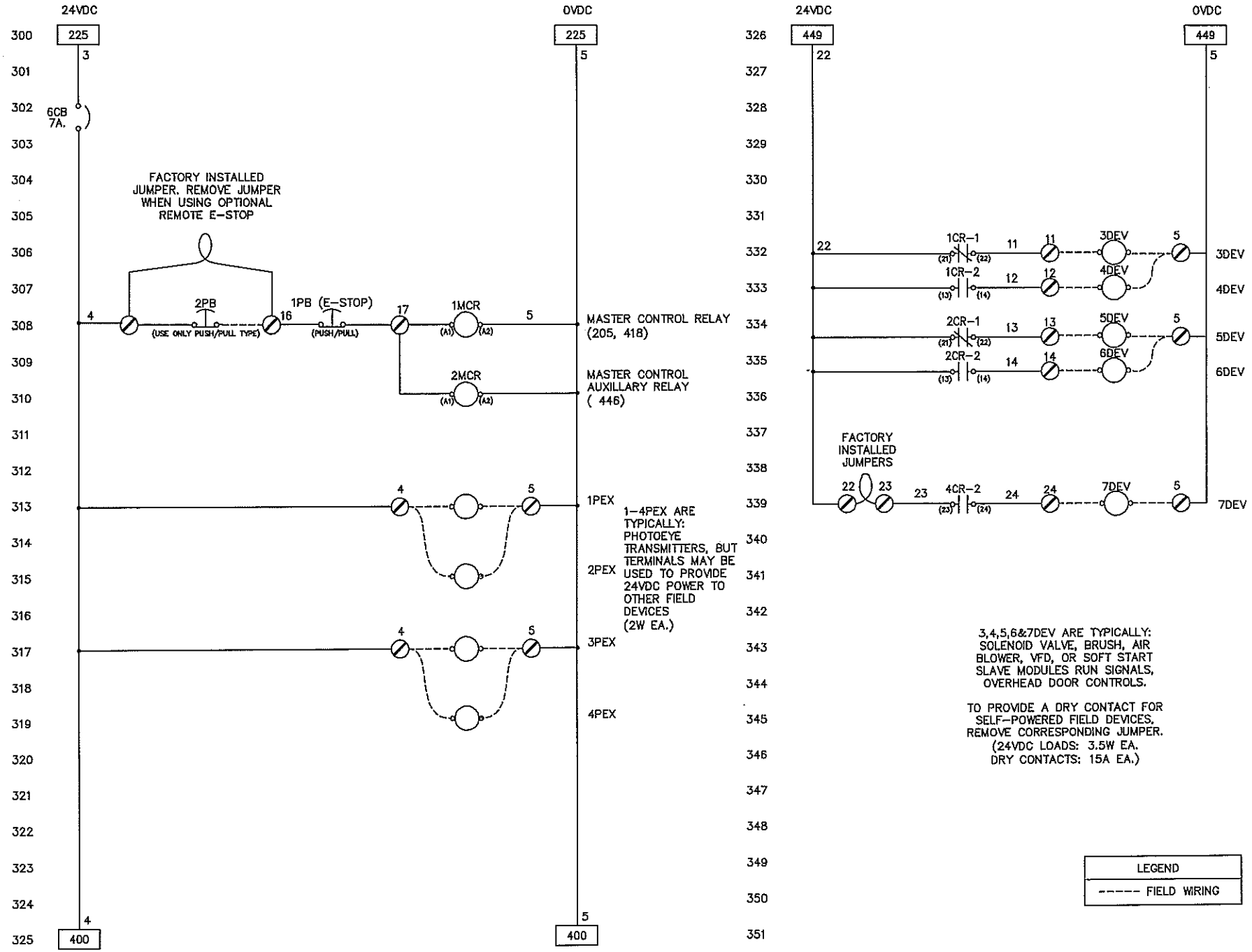

REV	DATE	DESCRIPTION	BY
B	07/09/05	MAJOR STARTERS, PLC ENCLOSURE CHANGES	KM
A	01/26/05	I/O MODIFICATION	KM

InterClean Equipment, Inc.

UNSPECIFIED DIMENSIONS: .XX: ±1/16, .XXX: ±.005, XXXX: ±.0005, ANGLE: ±1°

DRAWN BY: KM

CHECKED

APPROVED

TIRE WASHER PANEL
TYPE A
ELECTRICAL SCHEMATIC

DATE: 07/05/01

DWG. NO.: DY02-452_4

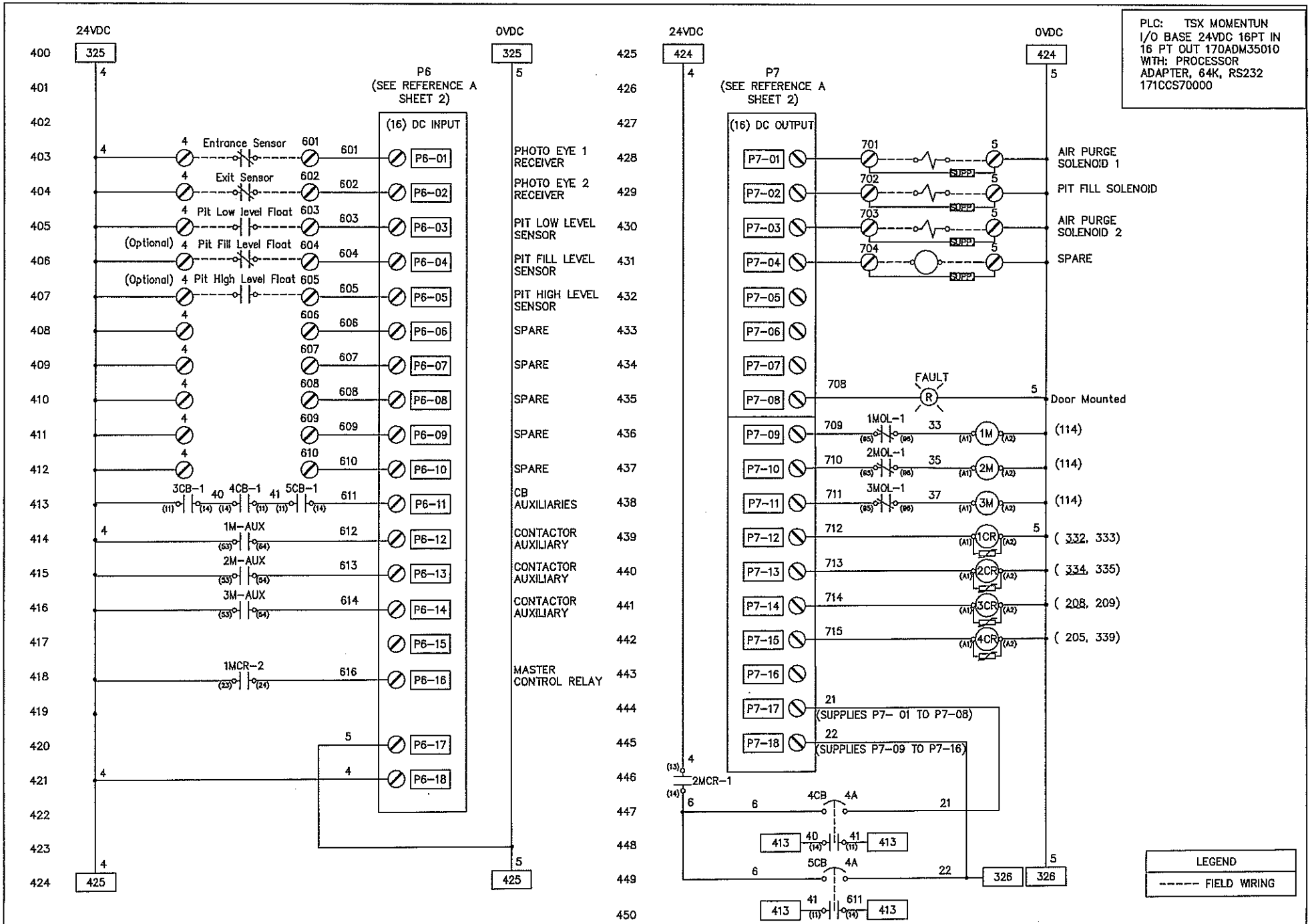

REV	DATE	DESCRIPTION	APP
B	07/03/03	U-LINE STARTER, P/S, ENCODER CHANGE	KM
A	06/26/03	I/O MODIFICATION	KM

InterClean Equipment, Inc.

UNSPECIFIED DIMENSIONS ARE:	
.XX:	±1/16
.XXX:	±1/64
XXXX:	±.005
ANGLE:	±1°

DRAWN BY: KM
ENGINEER:
APPROVED:

TIRE WASHER PANEL
TYPE A
ELECTRICAL SCHEMATIC

DATE: 07/05/01
DWG No: DY02-452_5

FRONT VIEW OF ENCLOSURE

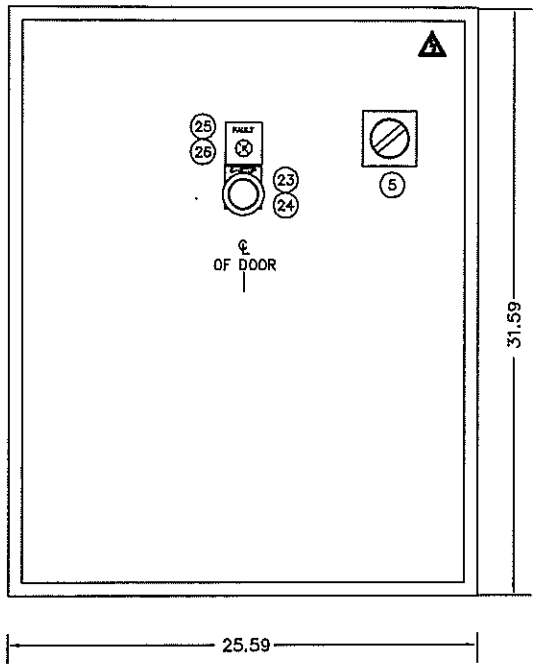

ENCLOSURE: 30.00"H X 24.00"W X 10.00"D

RIGHT SIDE VIEW OF ENCLOSURE

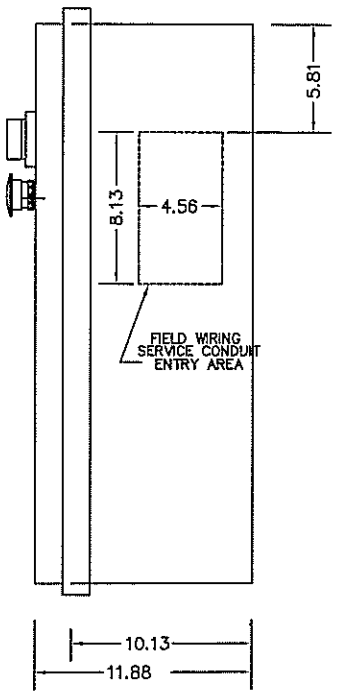

BOTTOM VIEW OF ENCLOSURE

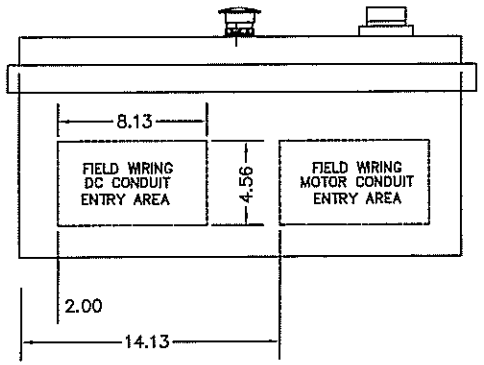

REV	DATE	DESCRIPTION	APP
B	07/09/03	U-LINE STARTER, P/S, ENCLOSURE CHANGE	KM
A	10/24/02	ROW 1&2 ADD AND TITLE CHANGE	KM

InterClean Equipment,Inc

DESPECTO TOLERANCES:
FRACTION: ±1/16
.XX: ±1/64
.XXX: ±.005
.XXXX: ±.0005
ANGLE: ±1°

DRAWN BY: KM
CHECKED
APPROVED
SCALE

TIRE WASHER PANEL
TYPE A
ENCLOSURE LAYOUT

DATE: 09/02/02
DWG: DY02-452_6

SECURE (4) FNQ-R-2 AMP FUSES
TO THE DUCT BELOW TRANSFORMER

TERMINAL DETAIL

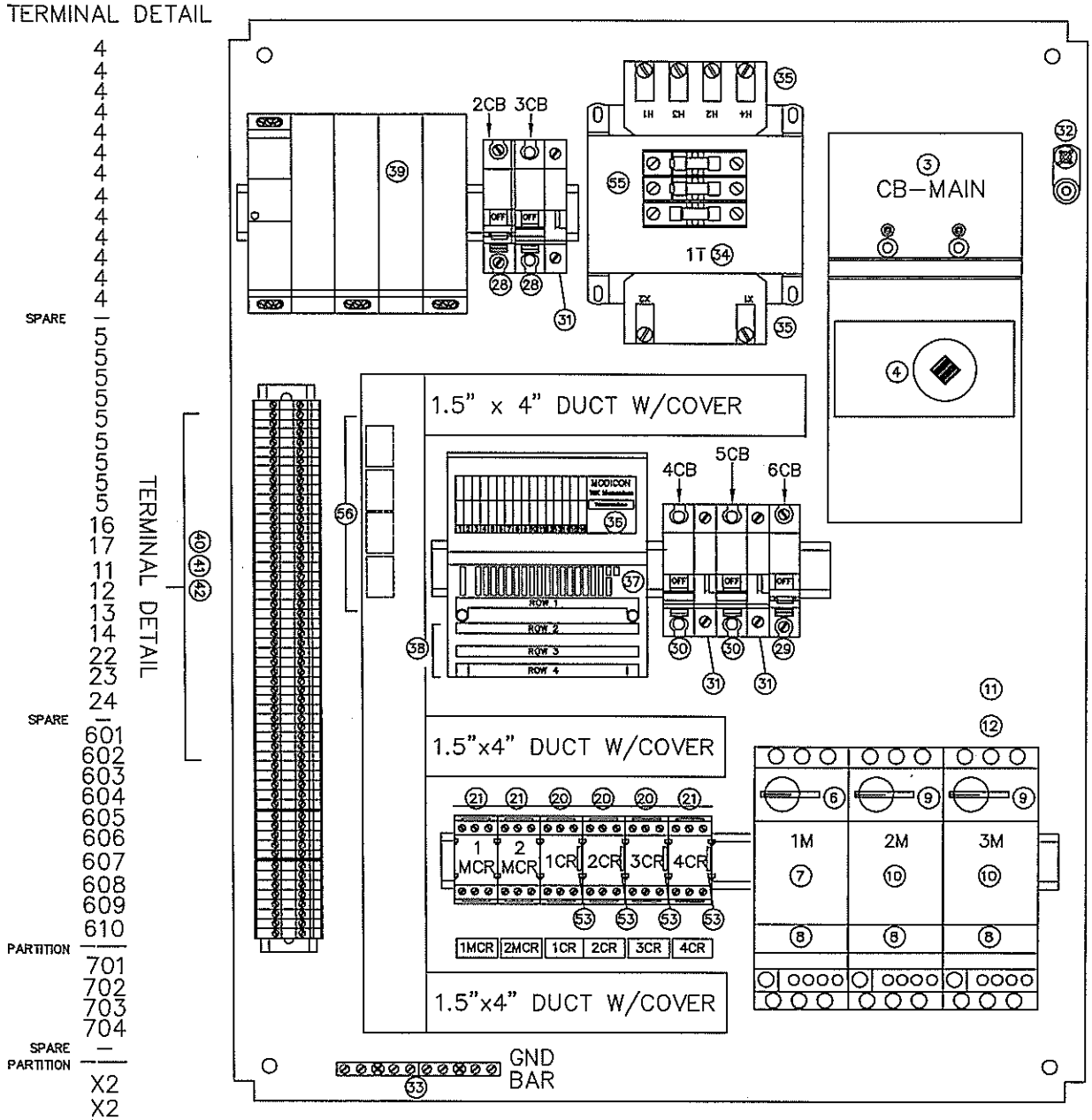

SUBPLATE: 27.00"H x 21.00"
NOT TO SCALE

InterClean Equipment, Inc

TIRE WASHER PANEL
TYPE A
PANEL LAYOUT

DWG DY02-452-6
DATE 07/05/01

ITEM	Description	Qty.	Part Number	Reference	Manufacture
1	Enclosure, N4X 30 x 24 x 10	1	AM30240RL	Main Enclosure	Allied Moulded
2	Mounting Plate 27 x 21	1	P3024	Main Enclosure	Allied Moulded
3	Molded Case Switch, 150A	1	NFHL36000S15	main disc.	Merlin Gerin
4	Extension CB Mechanism	1	29343	main disc.	Merlin Gerin
5	Handle, Disconnect Red/Yellow	1	29340	main disc.	Merlin Gerin
6	Starter Base U-Line	1	LUB12	1M	Telemecanique
7	Overload Module 3.0-12.0A	1	LUCB12BL	1M	Telemecanique
8	Status Indicator Contact Blocks	3	LUA1D11	1M - 2M - 3M	Telemecanique
9	Starter Base U-Line	2	LUB32	2M - 3M	Telemecanique
10	Overload Module 8.0-32.0A	2	LUCB32BL	2M - 3M	Telemecanique
11	Terminal Line Block 3PH	1	GV1G09	1M	Telemecanique
12	Bus Bar U-line 3 bases	1	GV2G345	1M - 2M - 3M	Telemecanique
13					
14					
15					
16					
17					
18					
19					
20	Relay, 1NO/1NC 24vdc coil	3	CA3SK11BD	1,2&3cr	Telemecanique
21	Relay 2NO 24vdc coil	3	CA3SK20BD	1&2mcr - 4cr	Telemecanique
22					
23	Pushbutton, MshHd 40mm E-Stop	1	XB4BT42	1pb	Telemecanique
24	Legend Plate, E-Stop Rnd 90mm	1	ZBY9330	1pb	Telemecanique
25	Pilot Light (Red), 24vdc Fault	1	XB4BVB4	1lt	Telemecanique
26	Legend Plate Pilot light (Blank)	1	ZBY2101	1lt	Telemecanique
27					
28	Supplementary Protector 6A	2	MG24430	2cb-3cb	Merlin Gerin
29	Supplementary Protector 7A	1	MG17415	6cb	Merlin Gerin
30	Supplementary Protector 4A	2	MG24428	4cb-5cb	Merlin Gerin
31	Aux Switch For CB	3	MG26925	3cb-4cb-5cb	Merlin Gerin
32	Lug, 1/0-#14 6061 ALU	1	TA-0	Ground	ILSCO
33	Ground Bar ALU 24 Circuit	1	PK15GTA	Ground	Square D
34	Xfmr, 1000VA w/fuses	1	9070TF1000D1	1t	Square D
35	Cover Transformer Pri/Sec Kit	1	9070FSC2	1t	Square D
36	Processor Adapter Momentum, 64K	1	171CCS70000	plc	Schneider
37	Base I/O 16 IN 16 Out	1	170ADM35010	plc	Schneider
38	Terminal Kit Momentum I/O	1	170XTS00100	plc	Schneider
39	Power Supply 120/230 24DC 10A	1	ABL7RP2410	p/s	Telemecanique
40	Grey Terminal Block 22-10AWG	56	AB1VV435U	tb1	Telemecanique
41	End Barrier AB1VV Term Block	2	AB1AC24	tb1	Telemecanique
42	End Anchor Term Block35mm DIN	12	AB1AB8M35	tb1	Telemecanique
43	2-pole Jumper (Pkg of 10)	0.1	AB1ALN22	tb1	Telemecanique
44	10-pole Jumper (Pkg of 10)	0.1	AB1ALN410	tb1	Telemecanique
45	Marker 1-10 (Pkg of 25)	1	AB1B510	tb1	Telemecanique
46	Marker 11-20 (Pkg of 25)	1	AB1B520	tb1	Telemecanique
47	Marker 21-30 (Pkg of 25)	1	AB1B530	tb1	Telemecanique
48					
49					
50					

ITEM	Description	Qty.	Part Number	Reference	Manufacture
51					
52					
53	Suppressor CA3 Relay	4	LA4SKE1E	1-4cr	Square D
54					
55	Fuses (2 req'd. + 4 spares)	6	FNQ-R-3	1t	Bussman
56	Suppressor (for Solenoids)	4	3TX7462-3D	DC Out-puts 1-4	Siemans
57					
58					
59	Din Rail 35mm 15mm Rise	1	9080 MH439	3m	Telemecanique
60					
61					
62	1.5" x 4" Wire Duct	6'	D1.5X4BL6		Panduit
63	1.5" Wire Duct Cover	6'	C1.5BL6		Panduit
64	Marker 0-9 (Pkg of 25)	3	AB1R11	tb1	Telemecanique
65	Marker Blank (Pkg of 25)	1	AB1RV	tb1	Telemecanique
66	Marker X (Pkg of 25)	1	AB1GX	tb1	Telemecanique
67					
68					
69					
70					
71					
72					
73					
74					
75					
76					
77					
78					
79					
80					
81					
82					
83					
84					
85	Din Rail 8" Long	1	9080 MH308		Telemecanique
86	Din Rail 10" Long	1	9080 MH310		Telemecanique
87	Din Rail 16" Long	1	9080 MH316		Telemecanique
88					
89					
90	Ty-Rap Mounting Base	12	25901-49417	Ty-Rap Mounting Base	Square D
91	Fuse Puller / Finger Guard	2	9070-FP-1	FU1, FU2	Square D
92					
93	Decal Ground	3	PESS-B-ES	Ground bar	Panduit
94	Decal shock risk triangle	1	WL32	Door	Panduit
95					
96					
97	Barrier Terminal Block Partition	2	AB1AS24	TB1	Telemecanique
98					
99					
100					

REV	DATE	DESCRIPTION	APP
B	07/09/03	MULTI-VOLTAGE STARTERS - PTS - ENCLOSURE	KM
A	10/24/02	ADD TRP 430 AND TITLE CHANGE	KM

InterClean Equipment,Inc

UNSPECIFIED TOLERANCES: FRACTION: ±1/16, .XX: ±1/64, .XXX: ±.005, XXXX: ±.0005, ANGLE: ±1°

DRAWN BY | CHECKED | APPROVED | STAFF

TIRE WASHER PANEL
TYPE A
MATERIALS LISTING

DATE 07/05/01
DWG DY02-452_8

DRAWING INDEX

DRAWING NUMBER	DESCRIPTION
LY06-067-00	DRAWING INDEX
LY06-067-01	3D VIEW
LY06-067-02	PLAN VIEW
LY06-067-03	SIDE VIEW
LY06-067-04	END VIEW
LY06-067-05	PLUMBING SCHEMATIC
LY06-067-06	ELECTRICAL LAYOUT
LY06-067-07	EQUIPMENT LAYOUT
LY06-067-08	PIPING 3D
LY06-067-09	CONCRETE LAYOUT
LY06-067-10	PIT DETAIL
LY06-067-11	UNDERGROUND PIPES AND CONDUITS

NOTE:
THIS DRAWING AND DESIGN IS THE PROPERTY OF INTERCLEAN EQUIPMENT INC. AND MUST NOT BE COPIED OR USED EITHER DIRECTLY OR INDIRECTLY FOR ANY WORK OTHER THAN THAT OF INTERCLEAN EQUIPMENT INC. WITHOUT SAID COMPANY'S EXPRESSED PERMISSION. ALL RIGHTS OF INVENTION OR DESIGN ARE RESERVED.

Interclean Equipment, Inc.
3939 Bestech Dr
Ypsilanti, MI 48197

Web Site: www.interclean.com
E-mail: sales@interclean.com
Phone: (734) 975-2967
(800) 468-3725
Fax: (734) 975-1646

R.	DATE	DESCRIPTION	BY	APPR
C	05/31/07	REVISED AS BUILT	SL	PK
B	09/25/06	THE TIRE GUIDE UPDATED	SL	PK
A	08/30/06	THE EQUIPMENT UPDATED	SL	PK

InterClean Equipment, Inc.

DESIGN:	DRAWN:
SUSAN	SUSAN
CHECK:	APPR:
PK	####
SCALE:	
NO SCALE	

FALCONBRIDGE LTD., ROUYN, QC, CANADA
HEAVY DUTY TIRE WASH, W/SIDE SPRAYS
DRAWING INDEX

DATE: 08/28/06
PART NO: LY06-067-00
WEIGHT:

D:\ECTS\Projects\Canada\Quebec\Rouyn-Noranda\Falconbridge-Ltd\LY06-067.dwg, 00_Index, 5/31/2007 11:37:42 AM, Simon, HPDJ1055CM.pc3

NOTE:
THIS DRAWING AND DESIGN IS THE PROPERTY OF INTERCLEAN EQUIPMENT INC. AND MUST NOT BE COPIED OR USED EITHER DIRECTLY OR INDIRECTLY FOR ANY WORK OTHER THAN THAT OF INTERCLEAN EQUIPMENT INC. WITHOUT SAID COMPANY'S EXPRESSED PERMISSION. ALL RIGHTS OF INVENTION OR DESIGN ARE RESERVED.

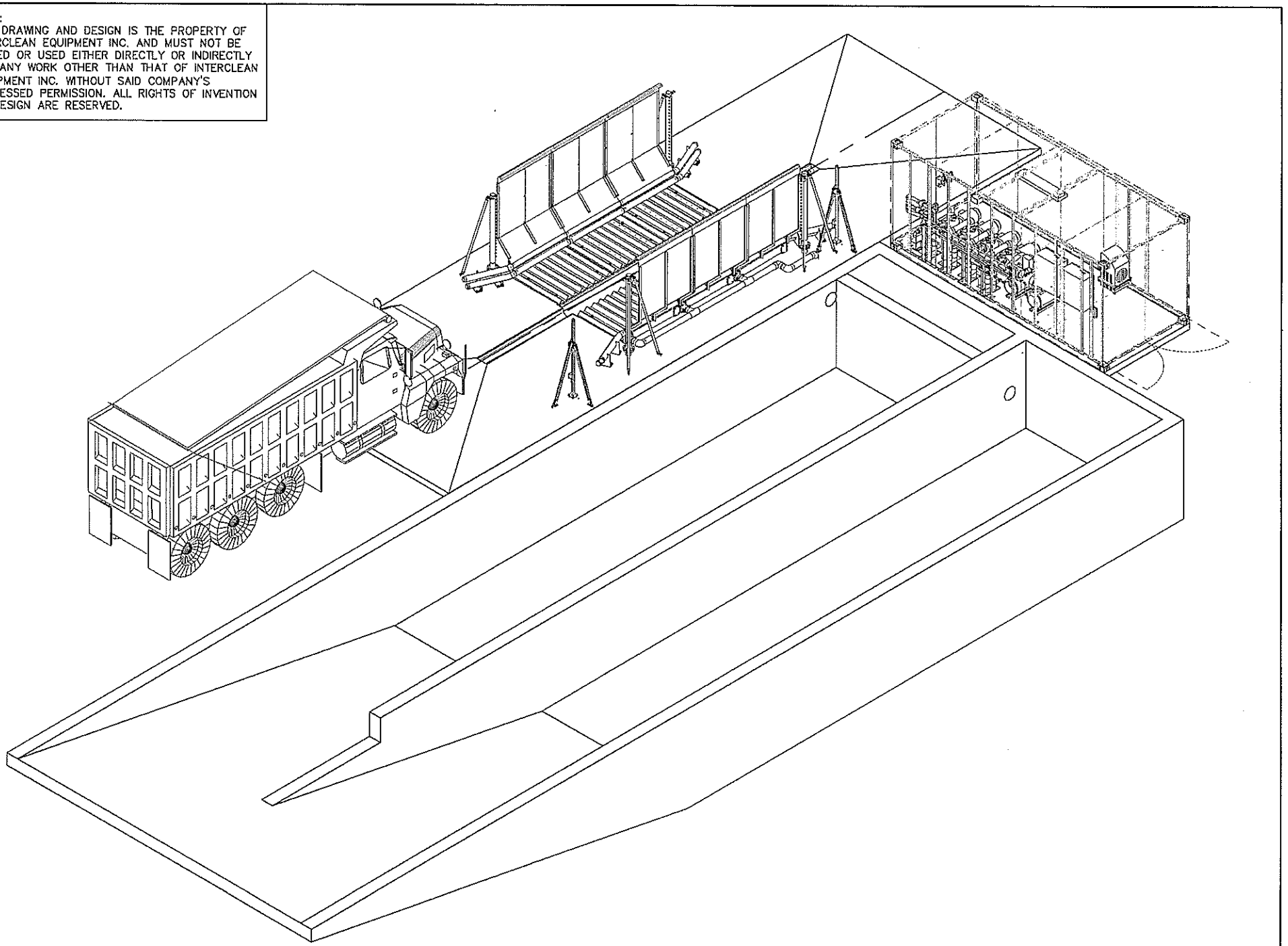

R.	DATE	DESCRIPTION	BY	APPR
C	05/31/07	REVISED AS BUILT	SIL	PK
B	09/25/06	THE TIRE GUIDE UPDATED	SIL	PK
A	08/30/06	THE EQUIPMENT UPDATED	SIL	PK

InterClean Equipment, Inc.

DESIGN: SUSAN	DRAWN: SUSAN
CHECK: PK	APPR: ####
SCALE: NO SCALE	

FALCONBRIDGE LTD., ROUYN, QC, CANADA
HEAVY DUTY TIRE WASH, W/SIDE SPRAYS
3-D VIEW

DATE: 08/28/06
PART NO: LY06-067-01
WEIGHT:

PROJECTS\Foreign\Canada\Quebec\Rouyn-Noranda\Falconbridge-Ltd\LY06-067.dwg, 01_3D, 5/31/2007 11:37:47 AM, Simon, HPDJ1055CM.pc3

NOTE:
THIS DRAWING AND DESIGN IS THE PROPERTY OF INTERCLEAN EQUIPMENT INC. AND MUST NOT BE COPIED OR USED EITHER DIRECTLY OR INDIRECTLY FOR ANY WORK OTHER THAN THAT OF INTERCLEAN EQUIPMENT INC. WITHOUT SAID COMPANY'S EXPRESSED PERMISSION. ALL RIGHTS OF INVENTION OR DESIGN ARE RESERVED.

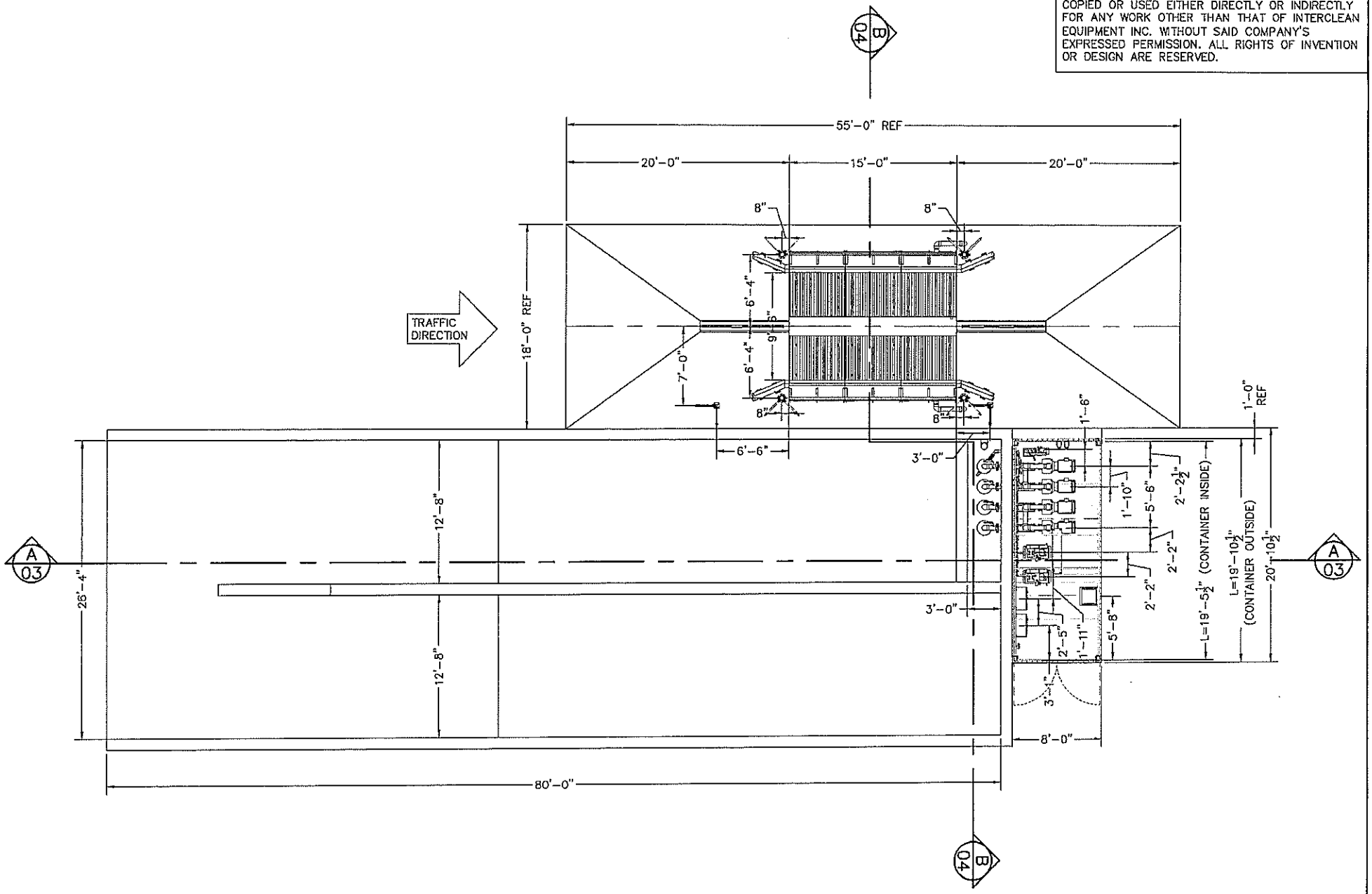

R.	DATE	DESCRIPTION	BY	APPR
C	05/31/07	REVISED AS BUILT	SIL	PK
B	09/25/06	THE TIRE GUIDE UPDATED	SIL	PK
A	08/30/06	THE EQUIPMENT UPDATED	SIL	PK

InterClean Equipment, Inc.

DESIGN:	DRAWN:
SUSAN	SUSAN
CHECK:	APPR:
PK	####
SCALE: 3/16"=1'	

FALCONBRIDGE LTD., ROUYN, QC, CANADA
HEAVY DUTY TIRE WASH, W/SIDE SPRAYS
PLAN VIEW

DATE: 08/28/06
PART NO: LY06-067-02
WEIGHT:

PROJECTS\Foreign\Canada\Quebec\Rouyn-Noranda\Falconbridge-1\stLY06-067.dwg, 02_Plan, 5/31/2007 11:38:16 AM, Simon, HPDJ1055CM.pc3

NOTE:
THIS DRAWING AND DESIGN IS THE PROPERTY OF INTERCLEAN EQUIPMENT INC. AND MUST NOT BE COPIED OR USED EITHER DIRECTLY OR INDIRECTLY FOR ANY WORK OTHER THAN THAT OF INTERCLEAN EQUIPMENT INC. WITHOUT SAID COMPANY'S EXPRESSED PERMISSION. ALL RIGHTS OF INVENTION OR DESIGN ARE RESERVED.

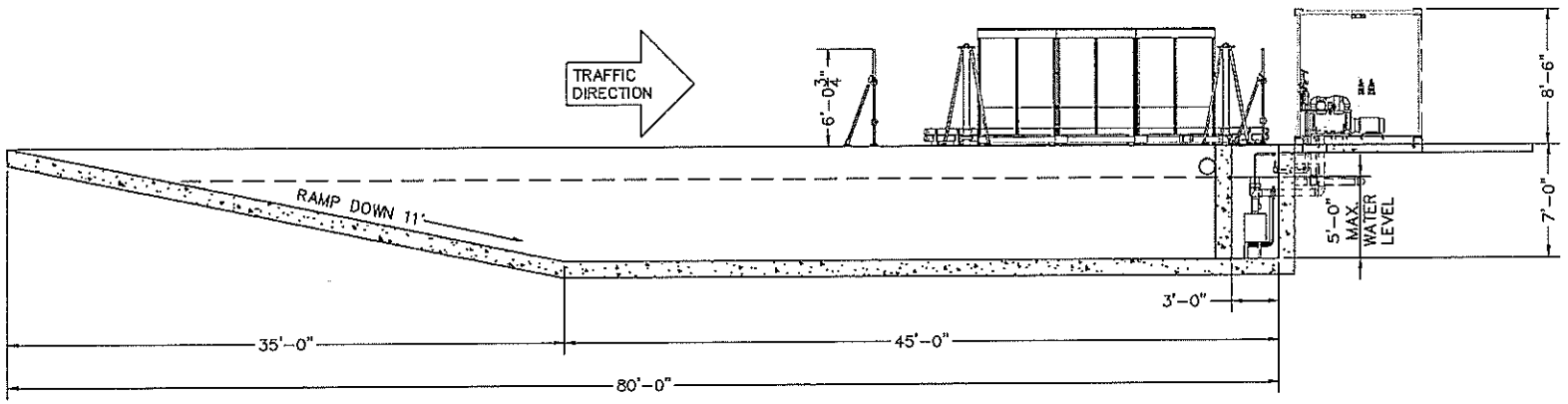

SECTION A/03
SCALE 3/16"=1'

NO.	DATE	DESCRIPTION	BY	APPR
C	05/31/07	REVISED AS BUILT	SIL	PK
B	09/25/06	THE TIRE GUIDE UPDATED	SIL	PK
A	08/30/06	THE EQUIPMENT UPDATED	SIL	PK

InterClean Equipment, Inc.

DESIGN:	DRAWN:
SUSAN	SUSAN
CHECK:	APPR:
PK	####
SCALE:	
3/16"=1'	

FALCONBRIDGE LTD., ROUYN, QC, CANADA
HEAVY DUTY TIRE WASH, W/SIDE SPRAYS
SIDE VIEW

DATE: 08/28/06
PART NO: LY06-067-03
WEIGHT:

PROJECTS\Foreign\Canada\Quebec\Rouyn-Noranda\Falconbridge-Ltd\LY06-067.dwg, 03_Side, 5/31/2007 11:38:32 AM, Simon, HPDJ1055CM.pc3

NOTE:
THIS DRAWING AND DESIGN IS THE PROPERTY OF INTERCLEAN EQUIPMENT INC. AND MUST NOT BE COPIED OR USED EITHER DIRECTLY OR INDIRECTLY FOR ANY WORK OTHER THAN THAT OF INTERCLEAN EQUIPMENT INC. WITHOUT SAID COMPANY'S EXPRESSED PERMISSION. ALL RIGHTS OF INVENTION OR DESIGN ARE RESERVED.

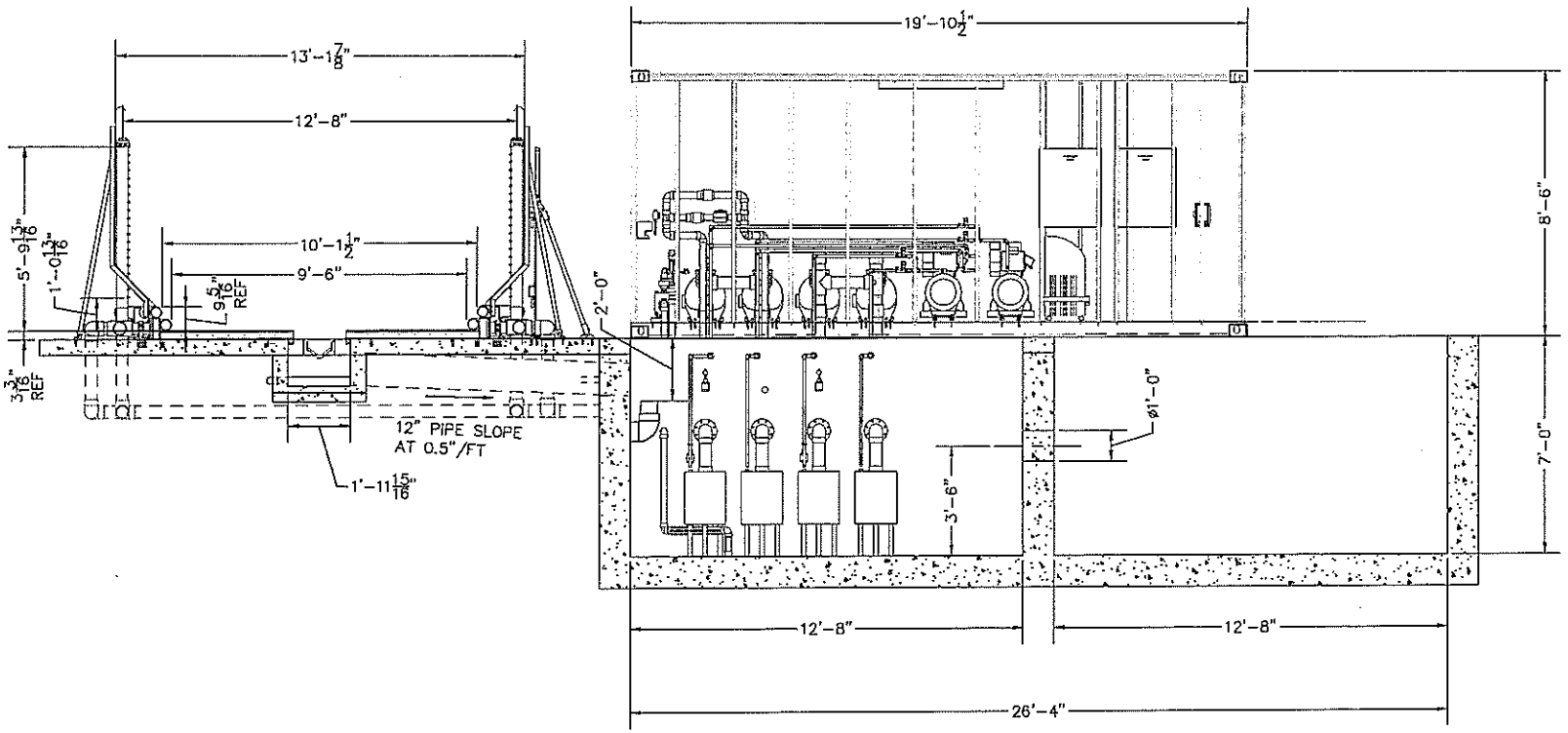

SECTION 04/B
SCALE 3/8"=1'

NO.	DATE	DESCRIPTION	BY	APPR
C	05/31/07	REVISED AS BUILT	SIL	PK
B	09/25/06	THE TIRE GUIDE UPDATED	SIL	PK
A	08/30/06	THE EQUIPMENT UPDATED	SIL	PK

InterClean Equipment, Inc.

DESIGN:	DRAWN:
SUSAN	SUSAN
CHECK:	APPR:
PK	####
SCALE:	
3/8"=1'	

FALCONBRIDGE LTD., ROUYN, QC, CANADA
HEAVY DUTY TIRE WASH, W/SIDE SPRAYS
END VIEW

DATE: 08/28/06
PART NO: LY06-067-04
WEIGHT:

PROJECTS\Engin\Canada\Quebec\Rouyn-Noranda\Falconbridge-Ltd\LY06-067.dwg, 04_End, 5/31/2007 11:38:47 AM, Simon, HPDJ1055CM.pc3

1. M-GAGE DETECTION SENSOR, 24 VDC, FLOOR MOUNTED
2. M-GAGE DETECTION SENSOR, 24 VDC, FLOOR MOUNTED
3. PUMP, CIRCULATION, 2HP, 575V, 3PH
4. PUMP, BIO-REMEDIATION, 120V, 1PH, 0.4 AMP
5. PUMP, POLYMER, 120V, 1PH, 0.4 AMP
6. MASTER CONTROL PANEL #1 (MP1), 575 VAC, 3 PH, FLA 49
7. MASTER CONTROL PANEL #2 (MP2), 575 VAC, 3 PH, FLA 46
8. DISTRIBUTION PANEL (DP), 120 VAC, 1 PH, FLA 40
9. SOLENOID VALVE, 3/4", 24 VDC, FOR INTERSCREEN AIR BACK WASH
10. SOLENOID VALVE, 3/4", 24 VDC, FOR INTERSCREEN AIR BACK WASH
11. SOLENOID VALVE, 3/4", 24 VDC, FOR INTERSCREEN AIR BACK WASH
12. SOLENOID VALVE, 3/4", 24 VDC, FOR INTERSCREEN AIR BACK WASH
13. PIT LOW LEVEL FLOAT SWITCH, 24 VDC, NO, 3" ABOVE INTERSCREEN COVER
14. PIT FILL LEVEL FLOAT SWITCH, 24 VDC, NC, LOCATED AT MAX. WATER LEVEL
15. PIT LOW LEVEL FLOAT SWITCH, 24 VDC, NO, 3" ABOVE INTERSCREEN COVER
16. PIT FILL LEVEL FLOAT SWITCH, 24 VDC, NC, LOCATED AT MAX. WATER LEVEL
17. SOLENOID VALVE, 2", 24 VDC, FOR PIT FILL
18. AIR CONDITION, HOT/COOL, 120 VAC, 1 PH, 950 W, 9 AMP
19. LIGHT, FLUIRESCENT, 2X40 W, 120 VAC
20. PUMP, 20 HP, 6.5" IMPELLER, 575 VAC, 3 PH
21. PUMP, 20 HP, 7.0" IMPELLER, 575 VAC, 3 PH
22. PUMP, 20 HP, 7.0" IMPELLER, 575 VAC, 3 PH
23. PUMP, 20 HP, 6.5" IMPELLER, 575 VAC, 3 PH
24. AIR COMPRESSOR, 20 GAL TANK, 120 VAC, 15 AMPS
25. AIR COMPRESSOR, 20 GAL TANK, 120 VAC, 15 AMPS
26. FEEDER AND DISCONNECT FOR MASTER CONTROL PANEL, 575 V, 3 PH.
27. FEEDER AND DISCONNECT FOR MASTER CONTROL PANEL, 575 V, 3 PH.
28. FEEDER AND DISCONNECT FOR DISTRIBUTION PANEL, 120 V, 1 PH.

PROVIDED BY:
- [A] INTERCLEAN
- [B] ELECTRICAL CONTRACTOR
- [C] CUSTOMER
- [D] GENERAL CONTRACTOR

1. 2-#16, 24 VDC, 1/2" CONDUIT
2. 3-#16, 24 VDC, 1/2" CONDUIT
3. 4-#16, 24 VDC, 1/2" CONDUIT
4. 3-#10, 575 VAC, 3/4" CONDUIT
5. 3-#8, 575 VAC, 3/4" CONDUIT
6. 2-#18, 25' SOOW-FLEXIBLE CORD, COMES W/FLOAT SWITCH
7. 3-#12, 120 VAC, 1/2" CONDUIT
8. 3#14, 120 VAC, 1/2" CONDUIT
9. FLEXIBLE CORD WITH PLUG, COMES W/EQUIPMENT
10. 3-#8, 120 VAC, 3/4" CONDUIT
11. 3-#14, 575 VAC, 1/2" CONDUIT

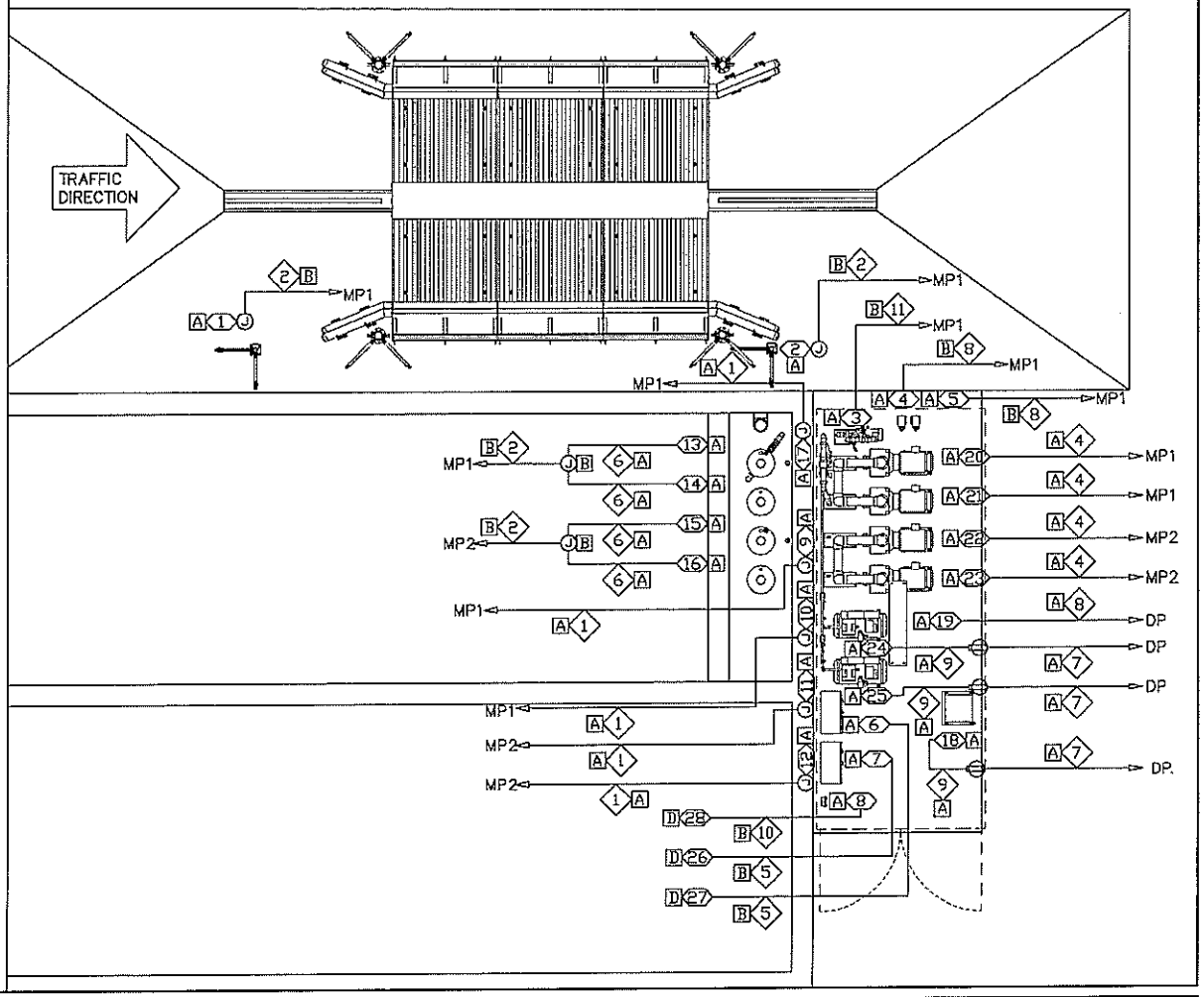

LEGEND:
- DEVICE
- RECEPTACLE, 120V, 20A
- JUNCTION BOX
- BRANCH CIRCUIT/FEEDER
- MP1 CONNECTED TO MASTER CONTROL PANEL #1
- MP2 CONNECTED TO MASTER CONTROL PANEL #2
- DP CONNECTED TO DISTRIBUTION CONTROL PANEL

NOTE:

1 ALL ELECTRICAL METHODS AND MATERIALS SHALL BE SUITABLE FOR USE IN WET LOCATION PER NEC 310-8, 370-15A, 410-4A, AND ALL APPLICABLE CODES.

2 ALL CONDUCTORS SHALL BE THHN AND HAVE TEMPERATURE RATING OF 90 °C (194 F°).

3 CONDUITS MAY BE COMBINED TO MINIMIZE RUNS, BUT DO NOT COMBINE AC AND DC CIRCUITS.

4 BRANCH CIRCUITS ARE SIZED FOR 500' MAX. RUNS.

5 ELECTRICAL CONDUIT SIZES ARE MINIMUMS REQUIRED BY INTERCLEAN. SIZES MAY BE SUBJECT TO CHANGE PER LOCAL CODES AND REGULATIONS.

6 MINIMUM SIZE FEEDER AMPACITY PER NEC 215-2(b)(C)

R.	DATE	DESCRIPTION	BY	APPR
C	10/12/06	ELECTRICAL LAYOUT UPDATED AS BUILT	SL	KM
B	09/25/06	THE TIRE GUIDE UPDATED	SL	
A	08/30/06	THE EQUIPMENT UPDATED	SL	

InterClean Equipment, Inc.

DESIGN: SUSAN | DRAWN: SUSAN | CHECK: KM | APPR: B&B | SCALE: 1/4"=1'

FALCONBRIDGE LTD., ROUYN, QC, CANADA
HEAVY DUTY TIRE WASH, W/SIDE SPRAYS
ELECTRICAL LAYOUT

DATE: 08/28/06
PART NO: LY06-067-06
WEIGHT:

PROJECTS\Foreign\Canada\Quebec\Rouyn-Noranda\Falconbridge-L&L\Y06-067.dwg, 06_Electrical, 5/31/2007 11:39:09 AM, Simon, HP DJ 1055CM.pc3

NOTE:
ITEMS SPECIFIED AND DETAILS INDICATED MAY BE SUBJECT TO SUPERSEDING PER LOCAL CODES AND REGULATIONS

NOTE:
THIS DRAWING AND DESIGN IS THE PROPERTY OF INTERCLEAN EQUIPMENT INC. AND MUST NOT BE COPIED OR USED EITHER DIRECTLY OR INDIRECTLY FOR ANY WORK OTHER THAN THAT OF INTERCLEAN EQUIPMENT INC. WITHOUT SAID COMPANY'S EXPRESSED PERMISSION. ALL RIGHTS OF INVENTION OR DESIGN ARE RESERVED.

BILL OF MATERIALS FOR LY06-067

ITEM NO.	QTY REQD.	PRODUCTID	PRODUCTNAME	DRAWINGFILENAME
1	2	#DY01-126_1	Air Compressor, Floor Mounted, 20Gal, 115V, w/3/4" Outlet	AC1121-00
2	8	#DY07-295_1	Arch Leg Ass'y, Floor Mount, H=6'-2", Galv.	AR3611-04
3	1	#DY06-099_1	Ligh Ass'y, Fluorescent, 2x40W, 120V	CO7f111-00
4	4	#DY07-292_1	Brace Fitting, for 4" Pipe, Weld, Galv.	CO812-4
5	2	COb121-02	Float Level Switch, Pit Fill, Red, NC, w/25' Cord, #SM2901-30	COb121-02
6	2	COb122-01	Float Level Switch, Pit Low, Yellow, NO, w/25' Cord, #PM2900-30	COb122-01
7	1	#DY05-220_1	Air Conditioner, Hot&Cool, 120w, 60Hz, 950w, Shelf Wall Mnt	HE611211-00
8	4	#DY06-130_1	InterScreen, SS, Weld, H=2'-11", 4" NPT Outlet, 0.015" Slot	IS232-00
9	1	#DY00-133_1	Intake Pipe, Field Ass'y, 2" SCH 80 PVC, 100 Holes	IS42-00
10	2	#DY04-281_1	Master Panel, Shop Ass'y, Tire Wash, Type A, 575V, 60Hz	PA1311222-00
11	1	#DY05-217_1	Distribution Panel w/3 Circuit, 120/240V, 60Amp, Nema 3R	PA4221-03
12	2	#DY06-225_1	Pump, PULSATron Series A plus, 0.25GPH, #LB02SA-KTC1-500	PU13a112-00
13	2	#DY04-114_1	Pump, Sump, Floor Mnt, 20Hp, 575V, tefc, 6.5" Impeller	PU222142421-00
14	2	#DY06-315_1	Pump, Sump, Floor Mnt, 20Hp, 575V, tefc, 7.0" Impeller	PU222142421-02
15	1	#DY06-322_1	Pump, w/Pipe & Fittings, Floor Mnt, 2Hp, 575V, 60Hz, tefc	PU22311221-01
16	2	#DY05-319_1	M-GACE Detection Sensor Ass'y, 24 VDC, H=6', Floor Mnt	SE37111-00
17	1	#DY05-242_1	Equipment Container (20'), H=8'-6", W=8', Shop Ass'y	TA11411-02
18	2	#DY06-318_1	Tire Guide End Section, Left, L=3'-4", Heavy Dury Frame Mnt	TGa3111-01
19	2	#DY06-319_1	Tire Guide End Section, Right, L=3'-4", Heavy Duty Frame Mnt	TGa3121-01
20	6	#DY07-290_1	Splash Wall Top, Sheet Metal, 60" x 11", Bending	WH135-09
21	2	#DY06-312_1	Side Spray Bar Ass'y, 4" Pipe, H=5'-11", w/20x0060 Nozzles	WH3112011-01
22	2	#DY06-314_1	Side Spray Bar Ass'y, 4" Pipe, H=5'-11", w/20x0060 Nozzles	WH3112011-02
23	2	#DY06-310_1	Heavy Duty Tire Wash Frame Ass'y, Galv., L=15', Floor Mnt	WH3131-15
24	6	#DY06-303_1	Splash Wall, Galv. L=5', H=6', Heavy Duty Frame Mnt	WH3132-00
25	1	#DY06-320_1	Plubing Ass'y, for 4 Prime Pump, Inside of 20' Iso Container	ZP1113-00

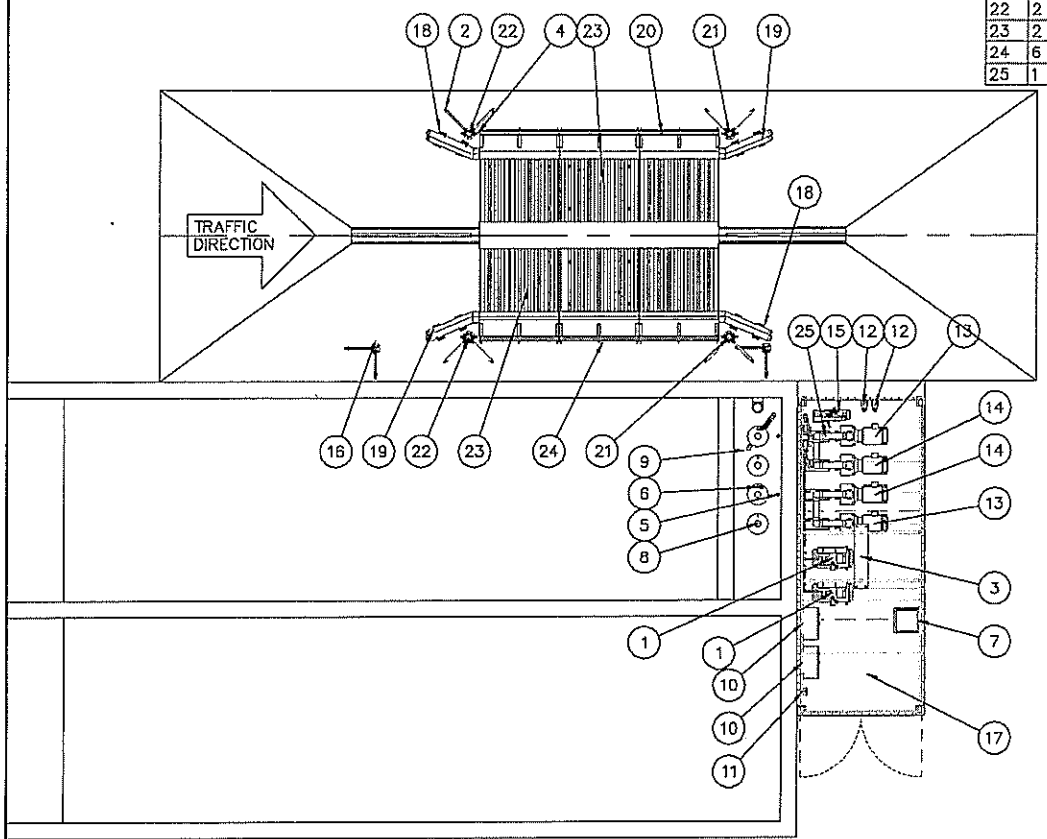

R.	DATE	DESCRIPTION	BY	APPR
C	05/31/07	REVISED AS BUILT	SL	PK
B	09/25/06	THE TIRE GUIDE UPDATED	SL	PK
A	08/30/06	THE EQUIPMENT UPDATED	SL	PK

InterClean Equipment, Inc.

DESIGN: SUSAN | DRAWN: SUSAN | CHECK: PK | APPR: #### | SCALE: 3/16"=1'

FALCONBRIDGE LTD., ROUYN, QC, CANADA
HEAVY DUTY TIRE WASH, W/SIDE SPRAYS
EQUIPMENT LAYOUT

DATE: 08/28/06
PART NO: LY06-067-07
WEIGHT:

PROJECTS\ForeignCanada\Quebec\Rouyn-Noranda\Falconbridge-L&L\LY06-067.dwg, 07_BOM, 5/31/2007 11:39:22 AM, Simon, HPDJ1055CM.pc3

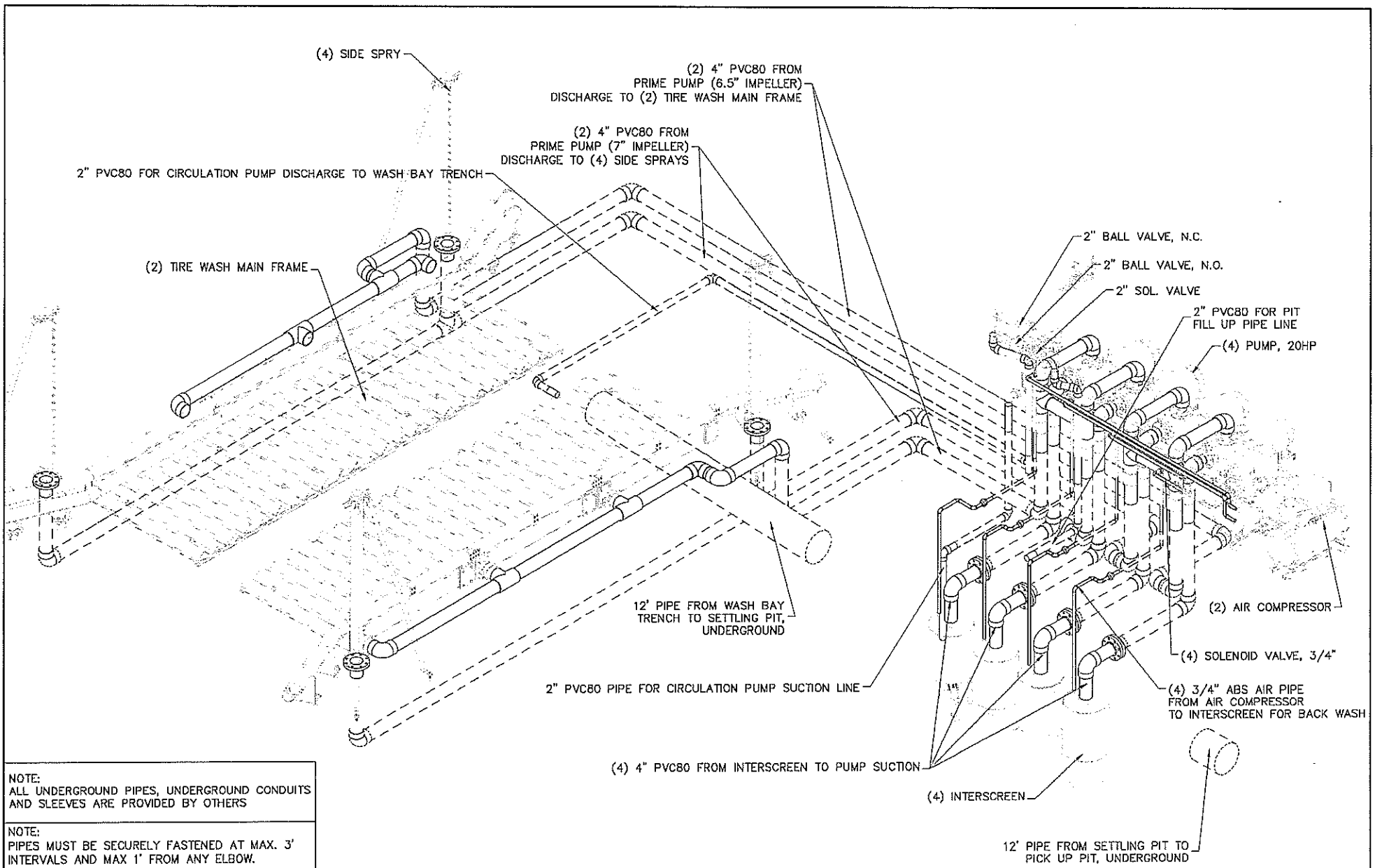

NOTE:
ALL UNDERGROUND PIPES, UNDERGROUND CONDUITS AND SLEEVES ARE PROVIDED BY OTHERS

NOTE:
PIPES MUST BE SECURELY FASTENED AT MAX. 3' INTERVALS AND MAX 1' FROM ANY ELBOW.

NOTE:
THIS DRAWING AND DESIGN IS THE PROPERTY OF INTERCLEAN EQUIPMENT INC. AND MUST NOT BE COPIED OR USED EITHER DIRECTLY OR INDIRECTLY FOR ANY WORK OTHER THAN THAT OF INTERCLEAN EQUIPMENT INC. WITHOUT SAID COMPANY'S EXPRESSED PERMISSION. ALL RIGHTS OF INVENTION OR DESIGN ARE RESERVED.

——— ABOVE GROUND PIPES
- - - - - - - UNDERGROUND PIPES

R.	DATE	DESCRIPTION	BY	APPR
C	05/31/07	REVISED AS BUILT	SIL	PK
B	09/25/06	THE TIRE GUIDE UPDATED	SIL	PK
A	08/30/06	THE EQUIPMENT UPDATED	SIL	PK

InterClean Equipment, Inc.

DESIGN: SUSAN	DRAWN: SUSAN
CHECK: PK	APPR: ####
SCALE: NO SCALE	

FALCONBRIDGE LTD., ROUYN, QC, CANADA
HEAVY DUTY TIRE WASH, W/SIDE SPRAYS
PIPING 3D

DATE: 08/28/06
PART NO: LY06-067-08
WEIGHT:

PROJECTS\Foreign\Canada\Quebec\Rouyn-Noranda\Falconbridge-Ltd\LY06-067.dwg, 09_3DPipe, 5/31/2007 11:39:36 AM, Simon, HPDJ1055CM.pc3

NOTE:
THIS DRAWING AND DESIGN IS THE PROPERTY OF INTERCLEAN EQUIPMENT INC. AND MUST NOT BE COPIED OR USED EITHER DIRECTLY OR INDIRECTLY FOR ANY WORK OTHER THAN THAT OF INTERCLEAN EQUIPMENT INC. WITHOUT SAID COMPANY'S EXPRESSED PERMISSION. ALL RIGHTS OF INVENTION OR DESIGN ARE RESERVED.

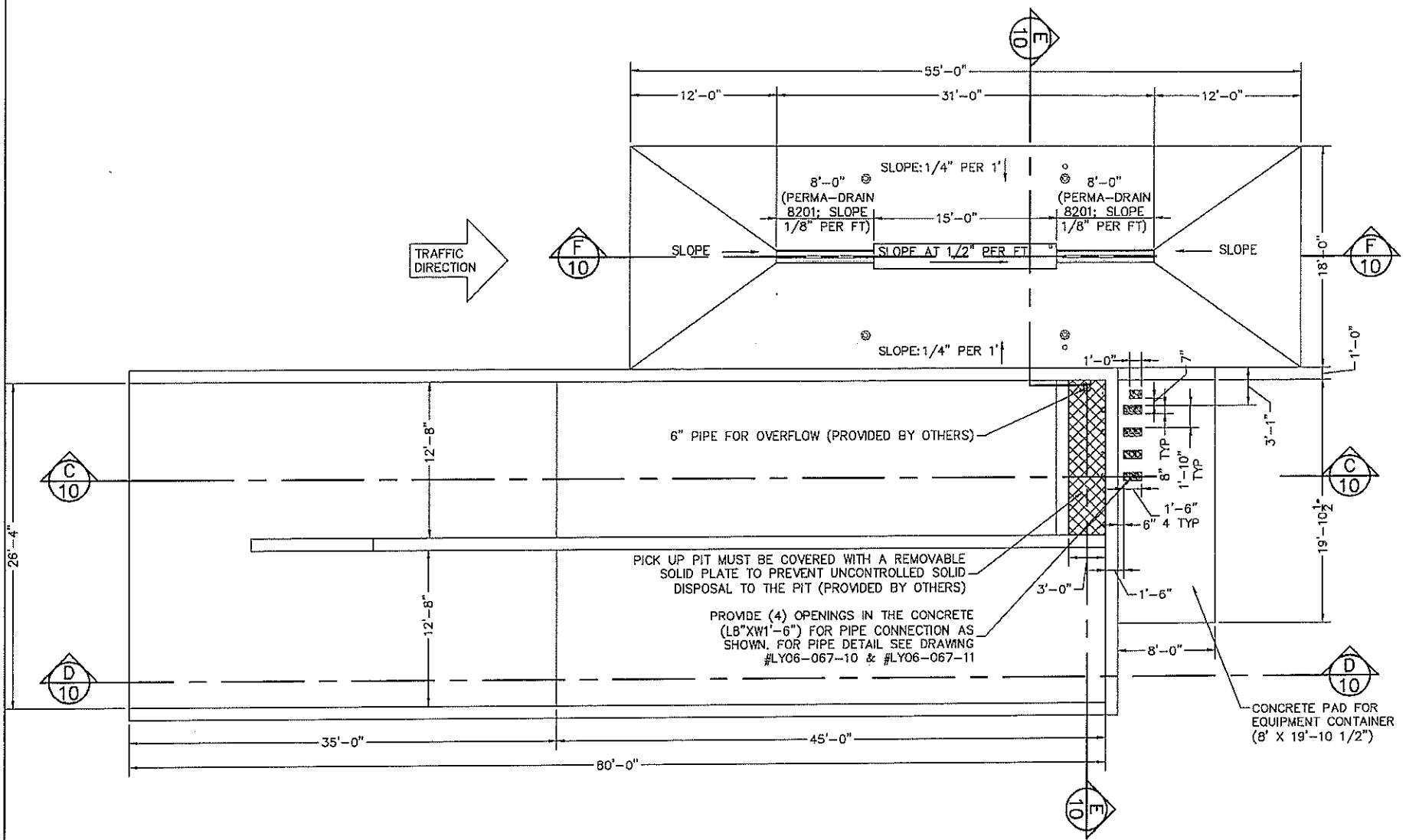

R.	DATE	DESCRIPTION	BY	APPR
C	05/31/07	REVISED AS BUILT	SL	PK
B	09/25/06	THE TIRE GUIDE UPDATED	SL	PK
A	08/30/06	THE EQUIPMENT UPDATED	SL	PK

InterClean Equipment, Inc.

DESIGN: SUSAN | DRAWN: SUSAN | CHECK: PK | APPR: #### | SCALE: 1/4"=1'

FALCONBRIDGE LTD., ROUYN, QC, CANADA
HEAVY DUTY TIRE WASH, W/SIDE SPRAYS
CONCRETE LAYOUT

DATE: 08/28/06
PART NO: LY06-067-09
WEIGHT:

PROJECTS\Foreign\Canada\Quebec\Rouyn-Noranda\Falconbridge-Ltd\LY06-067.dwg, 09_Concrete, 5/31/2007 11:39:57 AM, Simon, HPDJ1055CM.pc3

ALL UNDERGROUND PIPE SUTBS ARE 1/2" BELOW THE SURGACE.

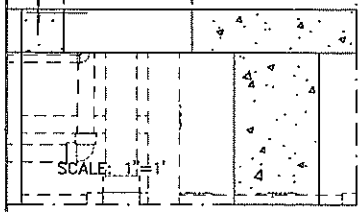

SECTION C/10
SCALE 3/16"=1'

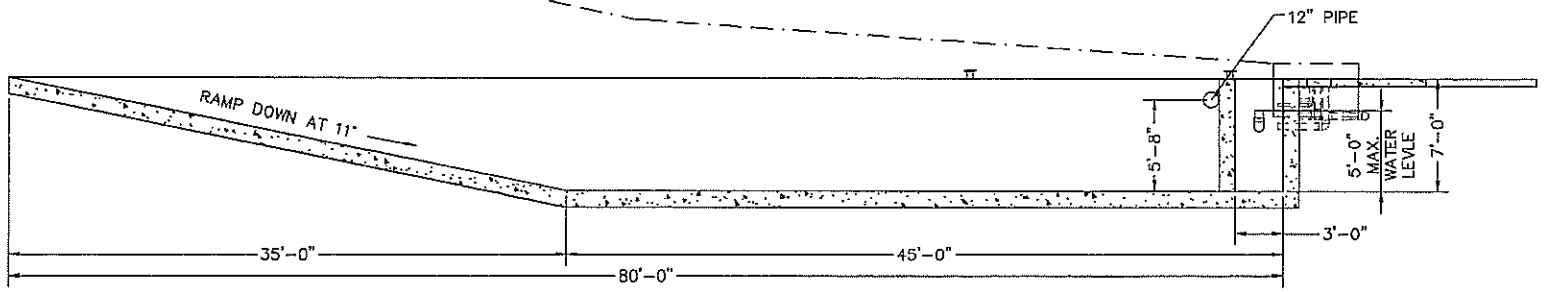

NOTE:
THIS DRAWING AND DESIGN IS THE PROPERTY OF INTERCLEAN EQUIPMENT INC. AND MUST NOT BE COPIED OR USED EITHER DIRECTLY OR INDIRECTLY FOR ANY WORK OTHER THAN THAT OF INTERCLEAN EQUIPMENT INC. WITHOUT SAID COMPANY'S EXPRESSED PERMISSION. ALL RIGHTS OF INVENTION OR DESIGN ARE RESERVED.

NOTE:
THE SUMP PUMP AND CIRCULATION /AERATION SUCTION PIPELINES TO BE LOCATED UNDER THE PIT WATER LEVEL FOR FULL LENGTH

NOTE:
ALL UNDERGROUND PIPES, UNDERGROUND CONDUITS AND SLEEVES ARE PROVIDED BY OTHERS

SECTION D/10
SCALE 3/16"=1'

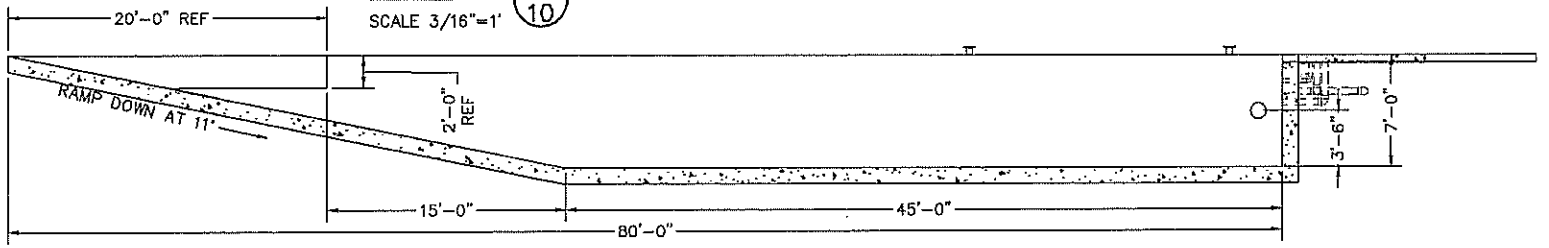

SECTION E/10
SCALE 3/8"=1'

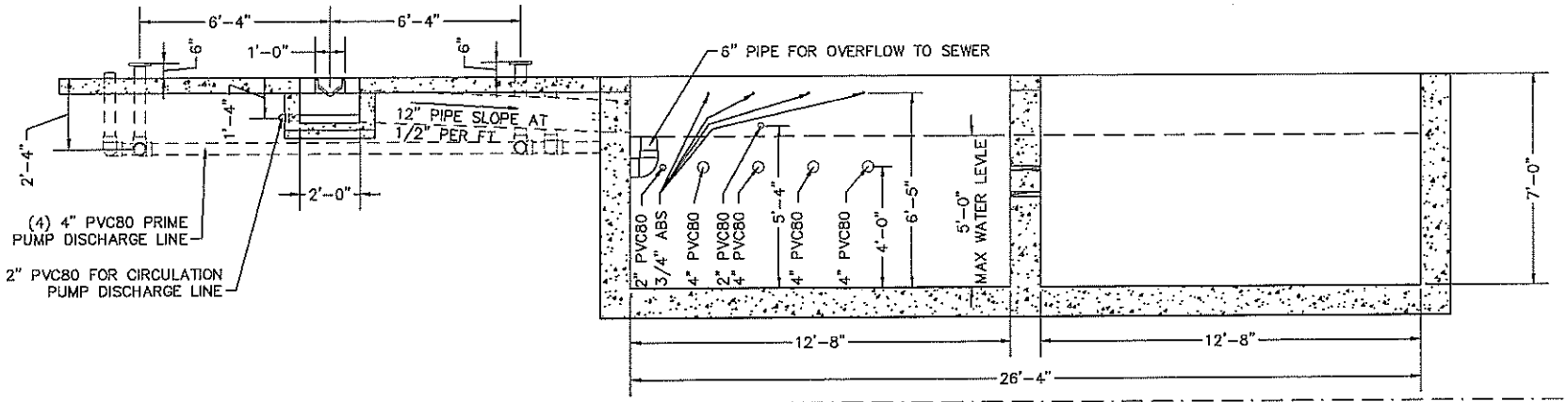

SECTION F/10
SCALE 3/8"=1'

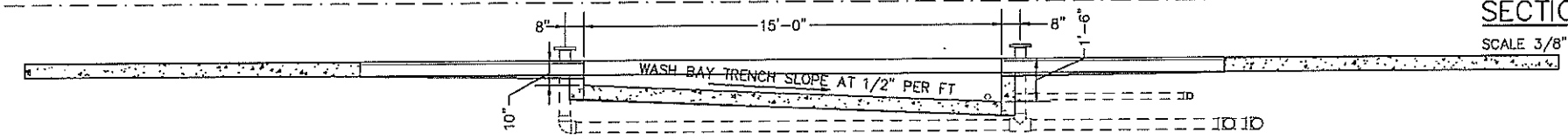

R.	DATE	DESCRIPTION	BY	APPR
C	05/31/07	REVISED AS BUILT	SIL	PK
B	09/25/06	THE TIRE GUIDE UPDATED	SL	PK
A	08/30/06	THE EQUIPMENT UPDATED	SL	PK

InterClean Equipment, Inc.

DESIGN: Susan | DRAWN: Susan
CHECK: PK | APPR: ####
SCALE: XX

FALCONBRIDGE LTD., ROUYN, QC, CANADA
HEAVY DUTY TIRE WASH, W/SIDE SPRAYS
PIT DETAIL

DATE: 08/28/06
PART NO: LY06-067-10
WEIGHT:

PROJECTS\Foreign\Canada\Quebec\Rouyn-Noranda\Falconbridge-Ltd\LY06-067.dwg, 10_PitDetail, 5/31/2007 11:40:02 AM, Simon, HPDJ1055CM.pc3

NOTE:
UNDERGROUND PIPELINES:
1. STANDARD PIPE THREADS AT BOTH ENDS OF GALVANIZED PIPE
2. LEAVE MIN. 6" STUB ABOVE FINISHED SURFACES
3. LEAVE MIN. 6" STUB OUT IN RECLAIM PIT
4. LOCATE UNDERGROUND PIPELINES FROM 8" TO 14" DEPTH UNLESS OTHERWISE STATED

NOTE:
THIS DRAWING AND DESIGN IS THE PROPERTY OF INTERCLEAN EQUIPMENT INC. AND MUST NOT BE COPIED OR USED EITHER DIRECTLY OR INDIRECTLY FOR ANY WORK OTHER THAN THAT OF INTERCLEAN EQUIPMENT INC. WITHOUT SAID COMPANY'S EXPRESSED PERMISSION. ALL RIGHTS OF INVENTION OR DESIGN ARE RESERVED.

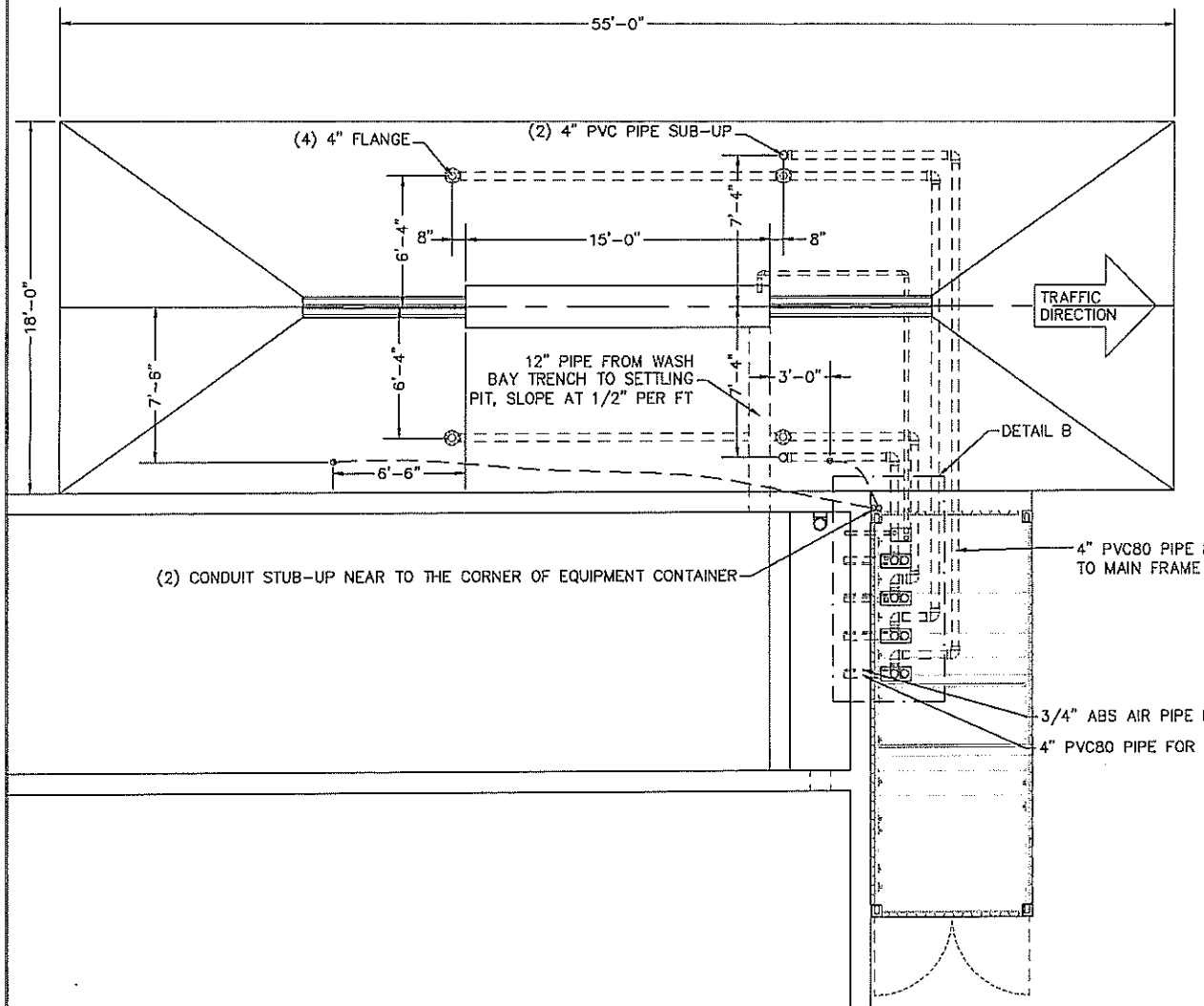

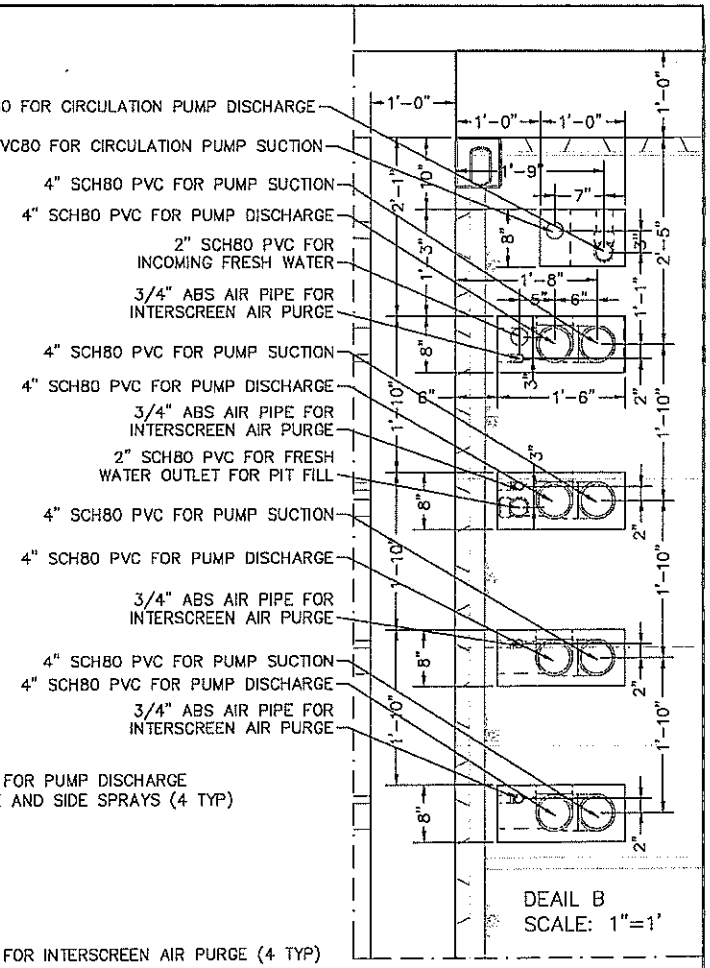

NOTE:
THE SUMP PUMP AND CIRCULATION /AERATION SUCTION PIPELINES TO BE LOCATED UNDER THE PIT WATER LEVEL FOR FULL LENGTH

NOTE:
ALL UNDERGROUND PIPES, UNDERGROUND CONDUITS AND SLEEVES ARE PROVIDED BY OTHERS

ABOVE GROUND PIPES
UNDERGROUND PIPES
1/2" UNDERGROUND CONDUITUNLESS OTHERWISE NOTED

R.	DATE	DESCRIPTION	BY	APPR
C	05/31/07	REVISED AS BUILT	SL	PK
B	09/25/06	THE TIRE GUIDE UPDATED	SL	PK
A	08/30/06	THE EQUIPMENT UPDATED	SL	PK

InterClean Equipment, Inc.

DESIGN: SUSAN | DRAWN: SUSAN | CHECK: PK | APPR: #### | SCALE: 1/4"=1'

FALCONBRIDGE LTD., ROUYN, QC, CANADA
HEAVY DUTY TIRE WASH, W/SIDE SPRAYS
UNDERGROUND PIPES AND CONDUITS

DATE: 08/28/06
PART NO: LY06-067-11
WEIGHT:

PROJECTS\Foreign\Canada\Quebec\Rouyn-Noranda\Falconbridge-Ltd\LY06-067.dwg, 11_UG, 5/31/2007 11:40:08 AM, Simon, HPDJ1055CM.pc3

ATTACHMENT 4-3

SEDIMENT TRAP FLOW AND VOLUME CALCULATIONS

Table 1 Truck Wash Calculation

Job No:	073-81694		
Made By:	GG		
Checked By:	SPS		
Reviewed By:	KFM		
Date:	10/6/2010		

Input geometry - single sediment trap cell

Freeboard	26	inch	
Max. water elevation - spillway	5	ft	(before spillway to Evaporation Ponds)
Single cell width	12.67	ft	
Max. water elev.	5.00	ft	
Pump Station Width	3.00	ft	
Pump Station Volume	7.04	cu.yd.	(before spillway to Stormwater Pond)
	7.04	cu.yd.	(before spillway to Evaporation Ponds)
Slope distance w/out wall	10.8	ft	(entrance length between two sediment traps w/out walls)
Slope distance w/ wall	25.3	ft	(horizontal length of the entrance ramp w/ walls dividing two cells)
Long wall length	80.00	ft	(sediment trap length, ramp + basin)
Basin length	44.00	ft	
Ramp/incline slope	19.44%		
	11.00	degrees	
Ramp length - submerged	25.7	ft	(submerged ramp length - horizontal plane, prior to spill to Stormwater Pond)
	24.9	ft	(submerged ramp length - horizontal plane, prior to spill to Evaporation Pond)

Sediment Trap Capacities

Before spillway to Stormwater Pond			
Volume - large cell	133.37	cu.yd.	(max. volume of larger cell before spillway to Stormwater Pond)
	26,935	gal	
Volume - small cell	123.99	cu.yd.	
	25,040	gal	
Total (both cells)	51,975	gal	(w/out pumping station volume)
	53,397	gal	(w/ pumping station volume)
Before spillway to Evaporation Pond			
Volume - large cell	132.36	cu.yd.	
	26,732	gal	
Volume - small cell	122.98	cu.yd.	
	24,837	gal	
Total (both cells)	51,569	gal	(w/out pumping station volume)
	52,990	gal	(w/ pumping station volume)

Pump rate capacity	600	gpm
Wash duration per truck	2	minutes
Operation	12	hours
Truck frequency	3	1/hour
Daily pumping volume	43,200	gal