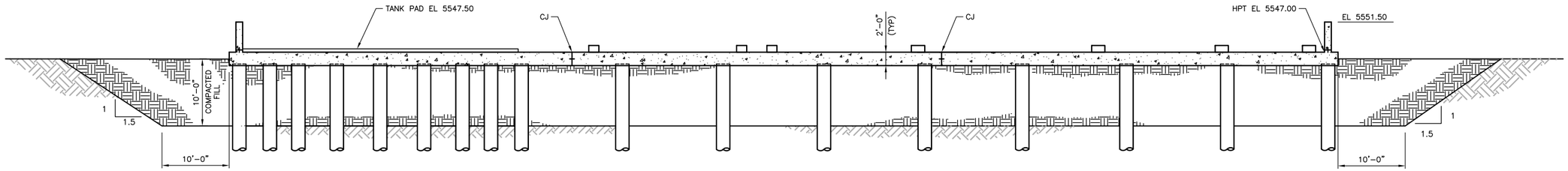

SECTION A–A (100–S–003)
SCALE: 1/8"=1'-0"

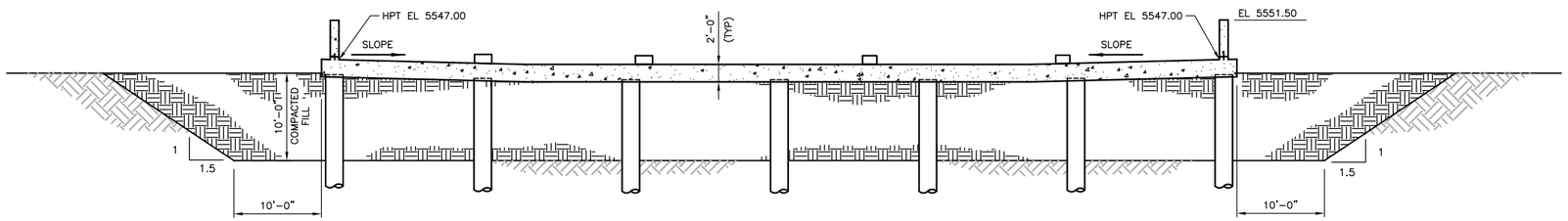

SECTION B–B (100–S–003)
SCALE: 1/8"=1'-0"

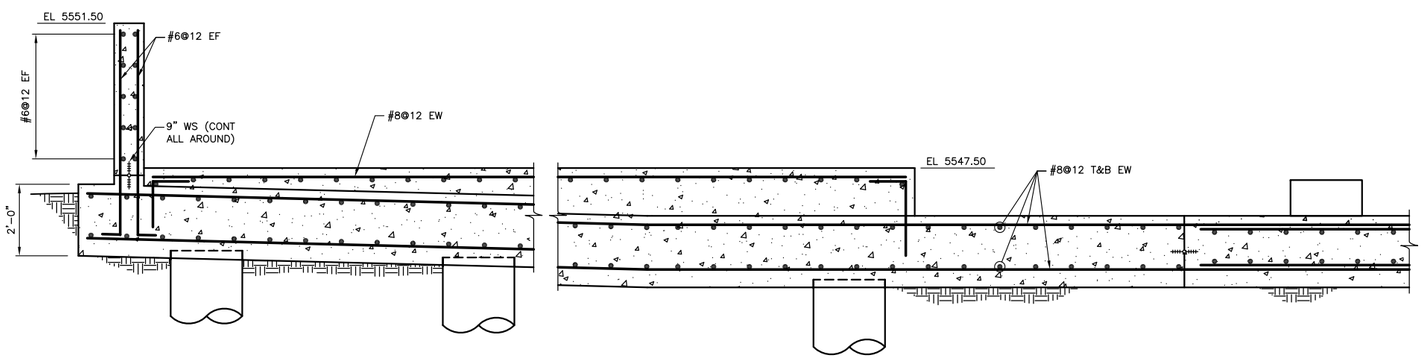

SECTION C–C (100–S–003)
SCALE: 1/2"=1'-0"

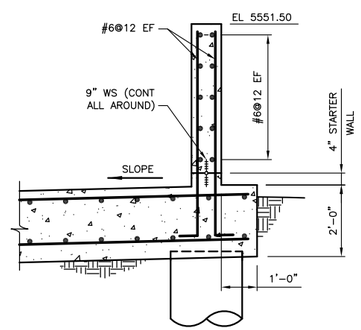

SECTION D–D (100–S–003)
SCALE: 1/2" = 1'-0"

NOTES:

1. SEE DRAWING 000–S–001 FOR GENERAL NOTES, ABBREVIATIONS AND LEGEND.

REVISIONS			
REV	DATE	DESCRIPTION	APPRVD BY
	5/20/10	PERMIT ISSUE	DAB

0 1/2 1 2
2" AT FULL SIZE
SCALE ACCORDINGLY

CONSULTANTS:
SMRC Structural Engineers Inc.
215 S. Wadsworth Blvd., Suite 320
Lakewood, CO 80226
ph 303.274.8656
fax 303.484.3777

CLIENT:
ENERGY FUELS RESOURCES CORPORATION
44 Union Blvd., Suite 600
Lakewood, CO 80228–1815
303–974–2140

PIÑON RIDGE MILL FOUNDATIONS – MONTROSE COUNTY, CO

AREA 100

PULP STORAGE AND PRE–LEACH AREA SECTIONS

SMRC PROJECT NO. EFR–2010–01
DESIGN BY: JI
DRAWN BY: KL
CHECKED BY: JI

DRAWING NO. 100–S–004

SHEET: 6 OF 25

Z:\SMRC Projects\Energy Fuels Resources\Pinon Ridge Foundations\dwgs\100-S-004.dwg, 5/19/2010 1:48:32 PM, Adobe PDF.pc3

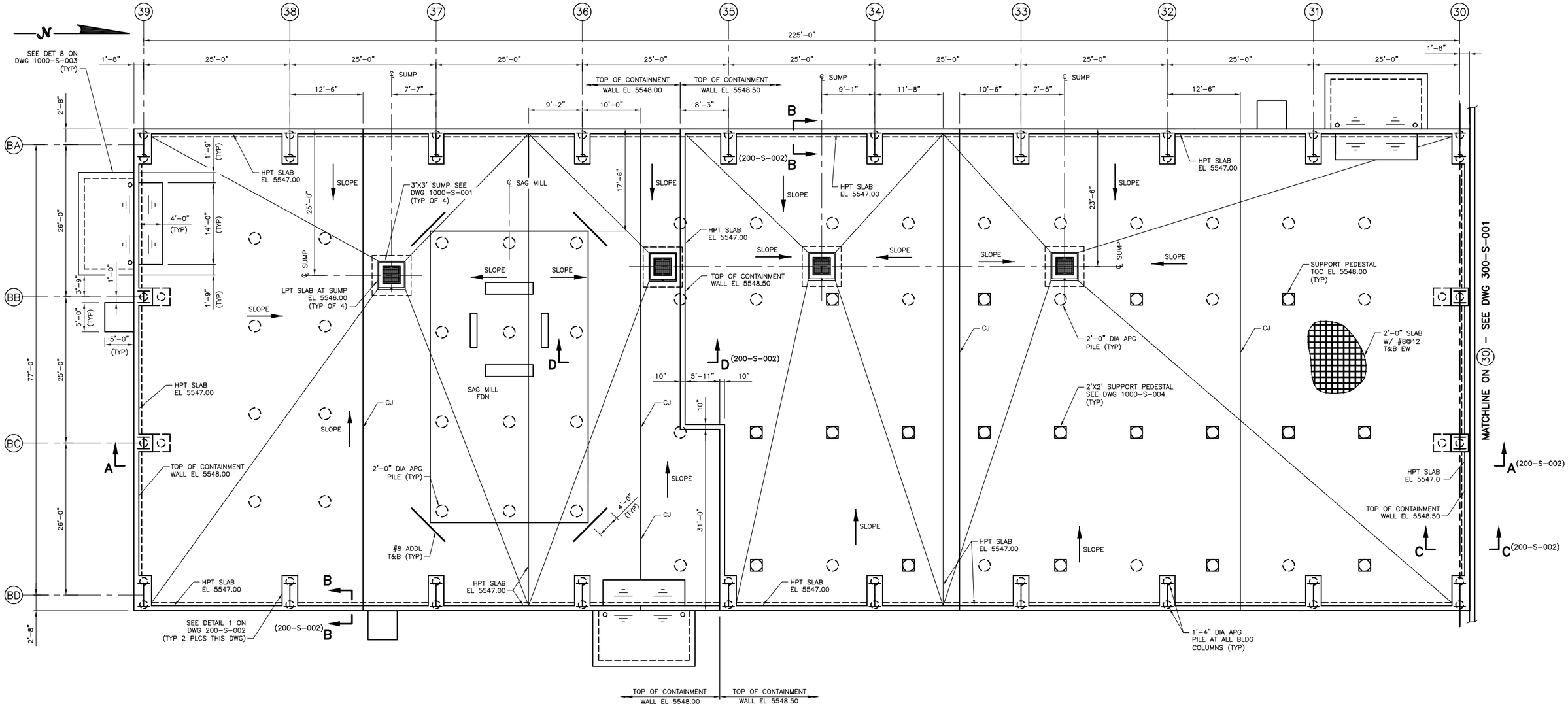

PLAN
SCALE: 1/8" = 1'-0"

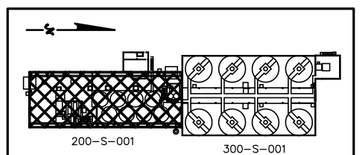

KEY PLAN

NOTES:

1. SEE DRAWING 000-S-001 FOR GENERAL NOTES, ABBREVIATIONS AND LEGEND.
2. SEE DRAWING 1000-S-001 FOR DETAILS OF SUMPS.
3. SEE DRAWING 1000-S-002 FOR DETAILS OF APG PILES.

REVISIONS			
REV	DATE	DESCRIPTION	APPRV'D BY
	5/20/10	PERMIT ISSUE	DAB

0 1/2 1 2
2" AT FULL SIZE
SCALE ACCORDINGLY

CONSULTANTS:
SMRC Structural Engineers Inc.
215 S. Wadsworth Blvd., Suite 320
Lakewood, CO 80226
ph 303.274.8656
fax 303.484.3777

CLIENT:
ENERGY FUELS RESOURCES CORPORATION
44 Union Blvd., Suite 600
Lakewood, CO 80228-1815
303-974-2140

PIÑON RIDGE MILL FOUNDATIONS – MONTROSE COUNTY, CO

AREAS 100/200

GRINDING AND LEACH BUILDING PLAN

SMRC PROJECT NO. EFR-2010-01
DESIGN BY: JI
DRAWN BY: KL
CHECKED BY: JI

DRAWING NO. 200-S-001

SHEET: 7 OF 25

Z:\SMRC Projects\Energy Fuels Resources\Pinon Ridge Foundations\dwgs\200-S-001 and 200-S-002.dwg, 5/21/2010 2:19:19 PM, Adobe PDF.pc3

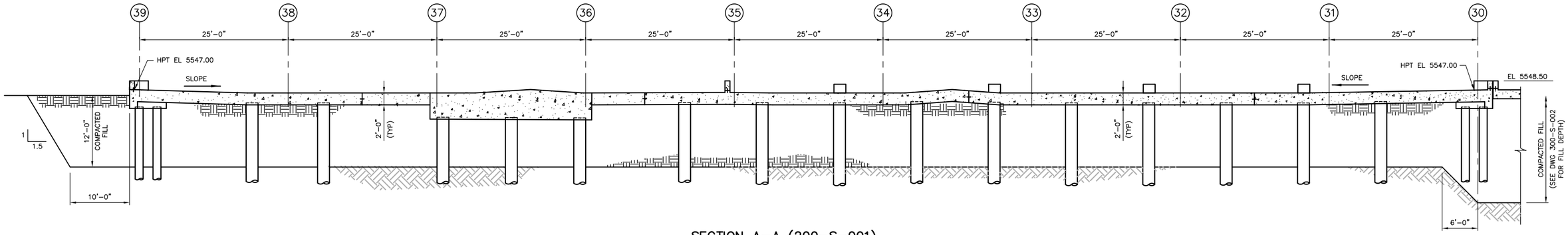

SECTION A–A (200–S–001)
SCALE: 1/8" = 1'-0"

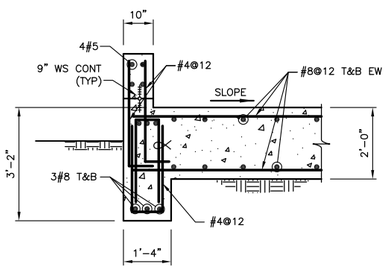

SECTION B–B (200–S–001)
SCALE: 1/2"=1'-0"

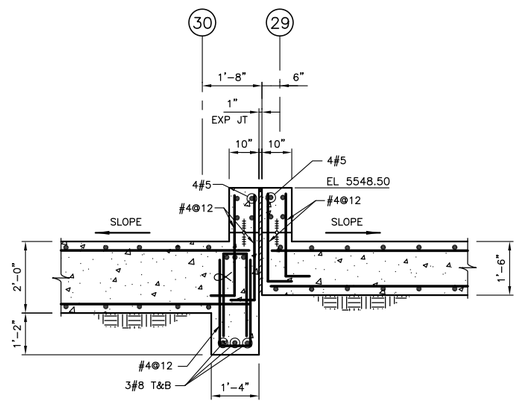

SECTION C–C (200–S–001) (300–S–001)
SCALE: 1/2"=1'-0"

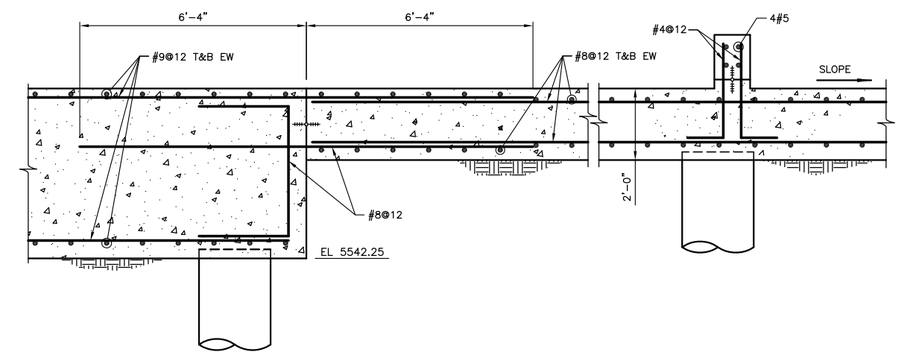

SECTION D–D (200–S–001)
SCALE: 1/2"=1'-0"

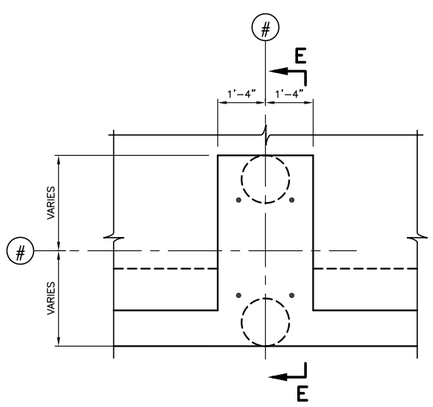

DETAIL 1 (200–S–001)
SCALE: 1/2"=1'-0"

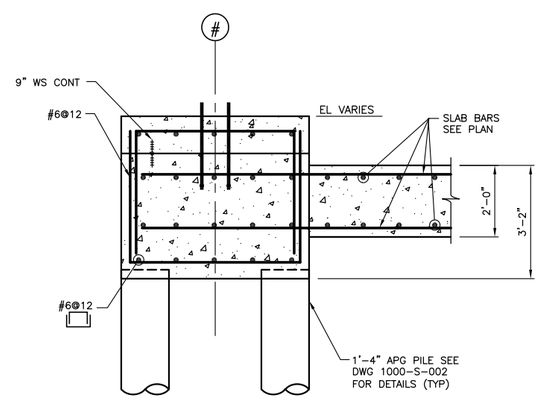

SECTION E–E
SCALE: 1/2"=1'-0"

NOTES:

1. SEE DRAWING 000–S–001 FOR GENERAL NOTES, ABBREVIATIONS AND LEGEND.

REVISIONS			
REV	DATE	DESCRIPTION	APPRVD BY
	5/20/10	PERMIT ISSUE	DAB

0 1/2 1 2
2" AT FULL SIZE SCALE ACCORDINGLY

CONSULTANTS:
SMRC Structural Engineers Inc.
215 S. Wadsworth Blvd., Suite 320
Lakewood, CO 80226
ph 303.274.8656
fax 303.484.3777

CLIENT:
ENERGY FUELS RESOURCES CORPORATION
44 Union Blvd., Suite 600
Lakewood, CO 80228–1815
303–974–2140

PIÑON RIDGE MILL FOUNDATIONS – MONTROSE COUNTY, CO

AREAS 100/200

GRINDING AND LEACH BUILDING
SECTIONS AND DETAILS

SMRC PROJECT NO. EFR–2010–01
DESIGN BY: JI
DRAWN BY: KL
CHECKED BY: JI

DRAWING NO. 200–S–002

SHEET: 8 of 25

Z:\SMRC Projects\Energy Fuels Resources\Piñon Ridge Foundations\dwgs\200-S-001 and 200-S-002.dwg, 5/21/2010 2:19:58 PM, Adobe PDF.pc3

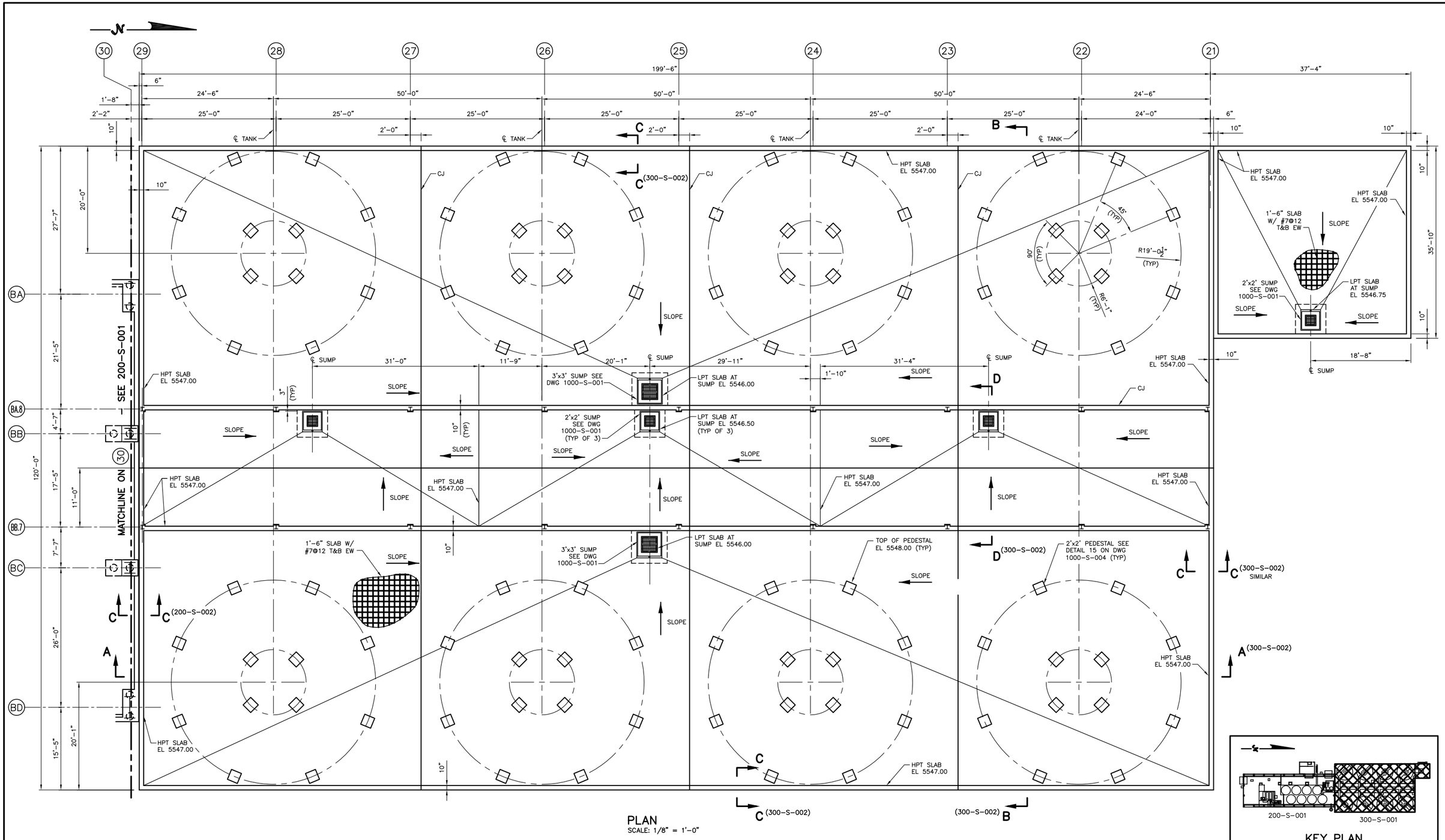

PLAN
SCALE: 1/8" = 1'-0"

KEY PLAN

NOTES:

1. SEE DRAWING 000-S-001 FOR GENERAL NOTES, ABBREVIATIONS AND LEGEND.

REVISIONS			
REV	DATE	DESCRIPTION	APPRVD BY
	5/20/10	PERMIT ISSUE	DAB

0 1/2 1 2
2" AT FULL SIZE
SCALE ACCORDINGLY

CONSULTANTS:
SM&RC Structural Engineers Inc.
215 S. Wadsworth Blvd., Suite 320
Lakewood, CO 80226
ph 303.274.8656
fax 303.484.3777

CLIENT:
ENERGY FUELS RESOURCES CORPORATION
44 Union Blvd., Suite 600
Lakewood, CO 80228-1815
303-974-2140

PIÑON RIDGE MILL FOUNDATIONS – MONTROSE COUNTY, CO

AREA 300
CCD THICKENER AREA
PLAN

SMRC PROJECT NO.	EFR-2010-01
DESIGN BY:	JI
DRAWN BY:	KL
CHECKED BY:	JI
DRAWING NO.	300-S-001
SHEET:	9 OF 25

Z:\SMRC Projects\Energy Fuels Resources\Pinon Ridge Foundations\dwgs\300-S-001.dwg, 5/19/2010 1:51:13 PM, Adobe PDF.pc3

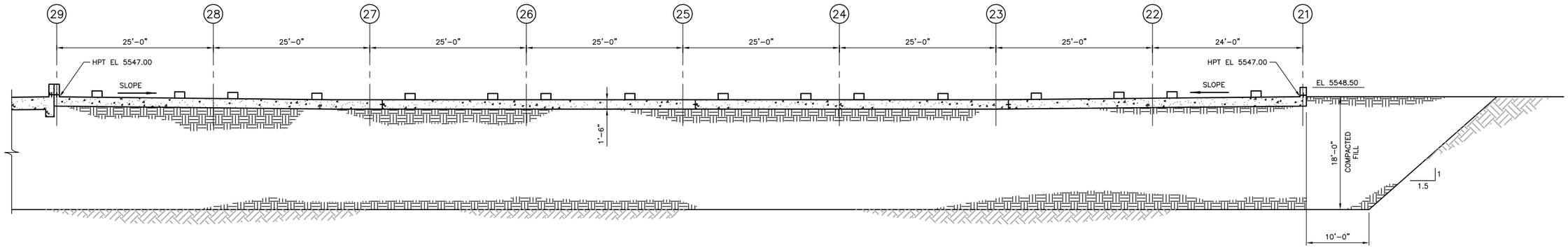

SECTION A–A (300–S–001)
SCALE: 1/8"=1'-0"

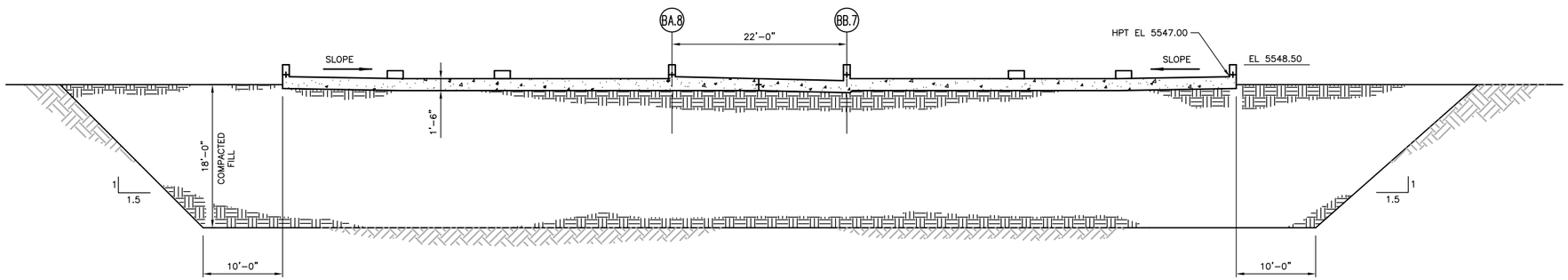

SECTION B–B (300–S–001)
SCALE: 1/8"=1'-0"

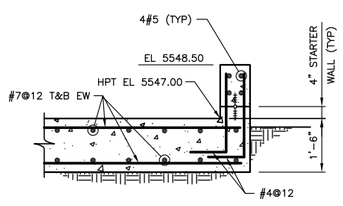

SECTION C–C (300–S–001)
SCALE: 1/2"=1'-0"

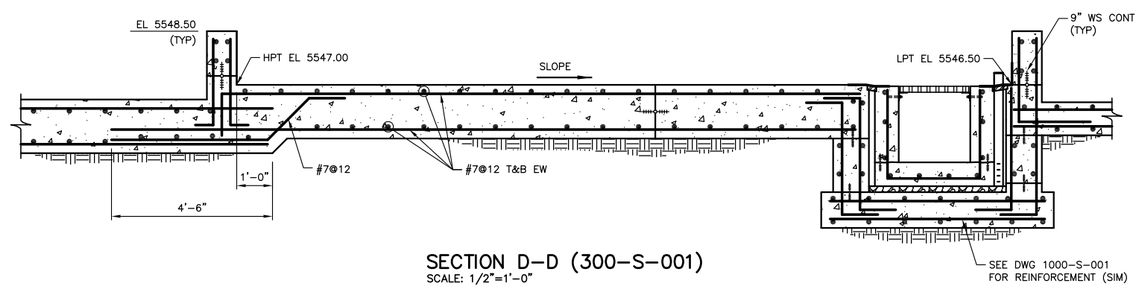

SECTION D–D (300–S–001)
SCALE: 1/2"=1'-0"

NOTES:

1. SEE DRAWING 000–S–001 FOR GENERAL NOTES, ABBREVIATIONS AND LEGEND.
2. THE CCD THICKENER AREA SHALL BE PRELOADED WITH FILL PRIOR TO CONSTRUCTION OF THE FOUNDATION. SEE DETAIL 4 ON DRAWING 1000–S–003.

REVISIONS

REV	DATE	DESCRIPTION	APPRV'D BY
	5/20/10	PERMIT ISSUE	DAB

0 1/2 1 2
2" AT FULL SIZE
SCALE ACCORDINGLY

CONSULTANTS:
SMRC Structural Engineers Inc.
215 S. Wadsworth Blvd.,
Suite 320
Lakewood, CO 80226
ph 303.274.8656
fax 303.484.3777

CLIENT:
ENERGY FUELS RESOURCES CORPORATION
44 Union Blvd., Suite 600
Lakewood, CO 80228–1815
303–974–2140

PIÑON RIDGE MILL FOUNDATIONS – MONTROSE COUNTY, CO

AREA 300

CCD THICKENER AREA SECTIONS

SMRC PROJECT NO. EFR–2010–01
DESIGN BY: JI
DRAWN BY: KL
CHECKED BY: JI

DRAWING NO. 300–S–002

SHEET: 10 OF 25

Z:\SMRC Projects\Energy Fuels Resources\Pinon Ridge Foundations\dwgs\300-S-002.dwg, 5/19/2010 4:08:02 PM, Adobe PDF.pc3