SECTION 6: SUPPORT MATERIALS

1. DE Bag Breaker and Dust Collector
2. Vanadium Dryer Dust Collector
3. Farr Baghouse
4. Heil Scrubbers
5. SAG Mill Process Scrubber
6. Leach Vent Process Scrubber
7. Uranium Precipitation Process Scrubber
8. Vanadium Precipitation Process Scrubber
9. Vanadium Packaging Process Scrubber
10. UDEQ Memo from Regg Olson
11. Roadway Design Recommendations Report
12. MILDOS-AREA Report (partial)
13. Estimating Releases and Waste Treatment Efficiencies for the TRI Form (partial)
14. EPA EPCRA Example Calculations
15. TANKS Analysis Files

Copyright 2009 Kleinfelder

1. DE BAG BREAKER AND DUST COLLECTOR

DYNAMIC AIR
Conveying Systems

BAGBUSTER™ Bag Breaker/Filter

Series 319 Model 1032

This model 319 Series 1032 Bag Buster by Dynamic Air is designed for easy opening and handling of longer bags (up to 48" inches long). It includes a continuous cleaning filter system, large exhaust fan, increased dust filtering capacity and a full width steel bar grating. Available in mild steel, stainless steel or aluminum.

.

DYNAMIC AIR® Conveying Systems

BAGBUSTER®

Bag Breaker/Filter
Series 319

Cleaner, more efficient bag opening

The BagBuster® bag breaker is a compact system for manually opening bags in an efficient and clean manner. The system includes a self-contained exhauster, cartridge dust filter and process hopper.

A downdraft design is utilized to pull any dust laden air generated during bag breaking away from the operator. The dust is then separated by the filter and dropped back into a process hopper, assuring all material is used.

The system pays for itself by lowering production costs and improving product yield.

Simple, effective design

An integral feature of the BagBuster bag breaker is the front access door. The access door is provided to maintain product integrity by preventing foreign substances from being inadvertently introduced into the process. The easy opening door drops down for bag breaker operation and can be closed when not in use.

The filter cartridges are readily accessible from the front, making replacement both fast and easy. In addition, the exhauster and all working parts are easy to access for maintenance.

Features

- Compact, self-contained unit
- Easy filter removal
- Solid state sequencing timer
- Heavy duty construction
- Removable bar grating
- Access door
- 99% + efficiency
- Full recovery of process material

Typical Application

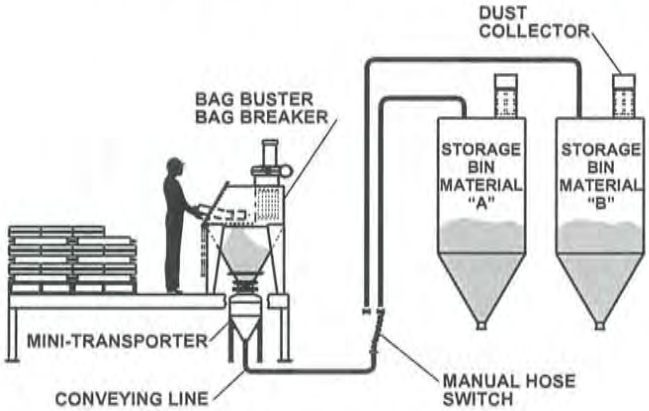

The *BagBuster* bag breaker handles

- Alumina
- Ball clay
- Barite
- Bauxite
- Bentonite
- Borax
- Calcium carbonate
- Cement
- Feldspar
- Fine coal
- Flour
- Fluorspar
- Fly Ash
- Gypsum
- Iron oxide
- Kaolin clay
- Lime
- Milk powder
- PVC resin
- Quartz
- Silica sand
- Soda ash
- Sodium sulfate
- Sugar
- Talc
- And More

How the *BagBuster* bag breaker works

While the operator manually breaks the bags, negative air pressure pulls air through the grating, away from the operator. This air, which may contain fine dusty material, passes through a replaceable cartridge filter to separate the material from the air. The cartridge filter is periodically and automatically cleaned using reversed jet pulsed air. The clean air is then exhausted into the atmosphere, and the collected material is saved and dropped back into the process hopper.

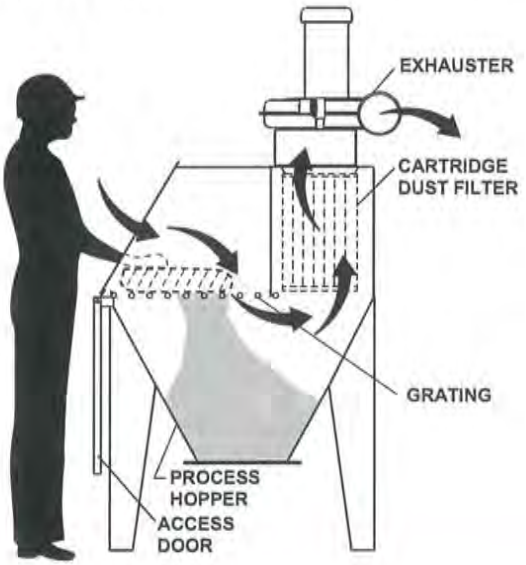

Construction features

Mild steel construction is standard. The BagBuster bag breaker is complete with 1 HP exhauster and timer controls for automatic filter cleaning. Outlet flange shown is standard.

Options

- Explosion-proof design
- Differential pressure gauge
- Special finishes and coatings
- Stainless steel construction
- Hopper aeration system
- Special discharge flange
- Leg extensions
- Bag compactor
- Barrel dump attachment
- Bulk bag unloading attachment
- Increased filter capacity
- Larger fan sizes
- Larger inlet openings

Dimensions and Specifications

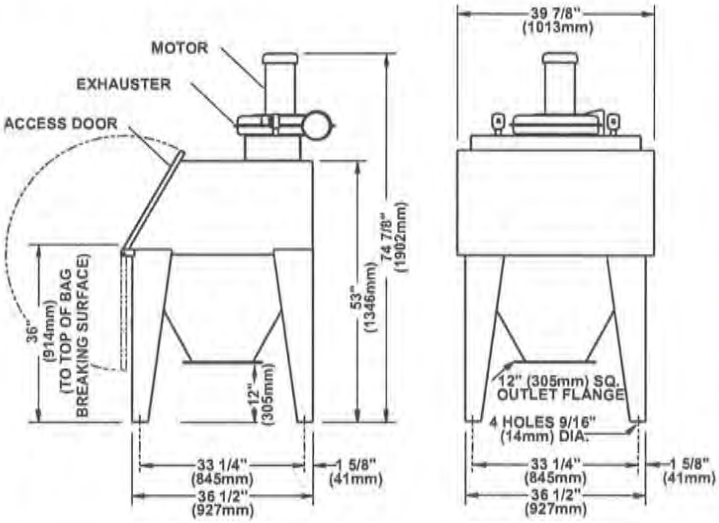

Engineering Data		
Exhauster	600 CFM at 84 dbA	1019 CMH at 84 dbA
Filter Area	100 square feet	9.29 square meters
Hopper Capacity	5 cubic feet	.14 cubic meters
Shipping Weight	500 lbs.	227 kgs
Motor	1 hp T.E.F.C.	.75 kW T.E.F.C.
Air Supply	4 SCFM at 80 PSIG	6.8 SCMH at 551.6 kPa
Operating Voltage	110 volt 50 hertz, 120 volt 60 hertz 220/440 volt 3 phase 60 hertz	

Access door open *Access door closed*

Specifications subject to change without notice.

Dynamic Air Conveying Systems® and BagBuster® are trademarks of Dynamic Air Inc., St. Paul, MN USA

Printed in U.S.A. • Bulletin 9511-3 (dm)
© 1995, 2005 Dynamic Air Inc.

DYNAMIC AIR®
Conveying Systems

Corporate Headquarters
Dynamic Air Inc. • St. Paul, MN USA • +1 651 484-2900

Worldwide Offices
Australia • Brazil • China • United Kingdom

www.dynamicair.com

2. VANADIUM DRYER DUST COLLECTOR

Bepex
Particle Processing Technology

KOMAREK-GREAVES®
STRONG SCOTT®
RIETZ®

April 25, 2008

Attention: Tim Burlingame - Mechanical Engineer
CH2M HILL INC.
9127 Jamaica Street
Englewood, CO 80112-5946

Your Ref.: Pinion Ridge; 365541-2200-006-RFQ
Bepex Reference: M-08-Q-14824

Dear Tim,

Please find attached our revised quotation for one (1) 530-DSY-01 URANIUM STEAM DRYER (Bepex Solidaire Model SJS 16-10) and one (1) 730-DSY-01 VANADIUM STEAM DRYER (Bepex Solidaire Model SJS 30-20). We have also included dust collectors and exhaust fans for each dryer. The dryers and these auxiliaries would be fabricated in 316 stainless steel for product contact surfaces.

Regarding the questions from your April 11, 2008 email:

Our sizing estimate for these dryers was based on a steam operating pressure of 93psig to product a product with less than 2% moisture at estimated product temperature of 194°F. Residence time is generally less than 5 minutes in our Solidaire.

We estimated our dryer sizes based on a U-value of 28 Btu/hr-ft2-°F, LMTD of 145°F and heat duties for the Uranium dryer and Vanadium dryer of 145,000 Btu/hr and 570,000 Btu/hr respectively. Please note that when we calculate the LMTD, we consider the product inlet temperature to approach the water boiling point rather than be the feed temperature. This results in a lower U-value than would be calculated if using feed temperature for product inlet. This is not a measurable temperature in this dryer, but our LMTD is based on our knowledge of the ability of the Solidiare to provide excellent contact of product with gas and will cause the counter-current moist air to condense and transfer heat to the ambient temperature incoming feed. Our experience in direct comparisons of the performance of our Thermascrew (hollow flight screw type dryer) and our Solidaire is that our Solidaire will require as little at ¼th the heat transfer surface of our Thermascrew for the same process.

Bepex International LLC
333 Taft Street NE • Minneapolis, MN 55413 USA
Phone 612-331-4370 • Fax 612-627-1444
www.bepex.com

Bepex
Particle Processing Technology

KOMAREK-GREAVES®
STRONG SCOTT®
RIETZ®

I have attached a generic Solidaire drawing and with dimensional information for both of the quoted units. Steam nozzle flange ratings are noted in our Exhibit D equipment descriptions.

Non-destructive tests and PWHT are not required on the Solidaire dryer with an unheated rotor. These may be required and performed on our Thermascrew and TorusDisc dryers with heated rotors.

We show detailed utility requirements in our quotation Exhibit E and dust collector and static pressure and volumetric flow rate in our quotation Exhibit D.

Dust collector fan static pressure (inches w.g.), design flow rate (scfm) and horsepower are shown in our quotation Exhibit D in the descriptions of each fan.

If you have questions or require additional information, please contact me at (612) 627-1414 or via email at tolson@bepex.com. You may also contact your Area Sales Manager, Mr. Mike Goodman at (707) 953-3315 or mgoodman@bepex.com.

Regards,

Tom Olson

Tom Olson
Product Specialist – Thermal Processing

cc: Scott Halvorsen
Mike Goodman
B.K. Kim – CH2M Hill

Bepex International LLC
333 Taft Street NE • Minneapolis, MN 55413 USA
Phone 612-331-4370 • Fax 612-627-1444
www.bepex.com

Bepex
Particle Processing Technology

KOMAREK-GREAVES®
STRONG SCOTT®
RIETZ®

QUOTATION

TO: CH2M HILL INC.
9127 Jamaica Street
Englewood, CO 80112-5946

Our Ref. No.: M-08-Q-14824-A
Your Ref.: **Pinion Ridge**
365541-2200-006-RFQ
Date: April 25, 2008

Attn: B.K. Kim – Project Procurement Manager

Exhibits ***Page No.***

A: Executive Summary 2-3

B: Reference P&ID, Reference Drawing/Dimensions 4-7

C: Equipment Description / Price 8

D: Equipment Specifications 9-14

E: Utilities 15

F: Performance Warranty 16-17

G: Shipment/Payment Terms/Documentation 18-20

H: Conditions of Sale 21

I: Exceptions to Buyer's Commercial Terms 22

J: Exceptions to Buyer's Technical Specifications 23

Attachment: Solidaire Brochure 24-26

Bepex International LLC
333 Taft Street NE • Minneapolis, MN 55413 USA
Phone 612-331-4370 • Fax 612-627-1444
www.bepex.com

Quotation #M-08-Q-14824-A
Date: April 25, 2008

EXHIBIT "A"

EXECUTIVE SUMMARY

The Solidaire is an extremely versatile and simple to operate dryer, but is also a very high performance dryer with unsurpassed heat transfer coefficient when compared to other indirect contact dryers. Possible operating variable of the Solidaire are jacket temperatures, counter-current gas flow/temperature, rotor speed and paddle setting, although in most drying applications all variables are fixed.

Rotor speed on the quoted units is fixed as is the case with most Solidaires. This speed can be changed either by changing sheaves and belts or via a frequency controller. Higher speed will generally increase heat transfer and decrease residence time over slower speed.

All paddles are adjustable both in pitch (conveyance or retention) and extension from the rotor (clearance). The threaded paddles are screwed into the rotor shaft and tightened with tapered locking nuts. Paddles would be factory adjusted, but may require optimization readjustment during start-up. In almost all cases, only paddles just ahead of the discharge would be adjusted to increase or decrease residence time. For this adjustment in the Uranium dryer, the rotor would need to be partially removed. For this adjustment in the larger Vanadium dryer, there are ports available for this adjustment without removing the rotor.

A typical set-up and P&ID for our Solidaire follows this Exhibit A. Our standard Solidaire set-up would include a dust collector, airlock, exhaust fan, gas heater and screw feeder. (Also see attached Solidaire information.)

In a standard Solidaire set-up, the wet feed is metered into the side of the Solidaire with a screw metering device. Product is conveyed through the Solidaire in a spiraling thin film and is dried due to contact with the steam jackets. Dry product discharges through a rotary airlock.

Drying is aided by a counter-current heated dry gas purge or carrier gas. This gas purge enters the Solidaire discharge endplate and, as it flows through the Solidaire toward the vent nozzle, it is absorbing and carrying off evaporated moisture. A normal purge gas flow rate is one pound of dry gas for each pound of moisture evaporated. The inlet temperature of this purge gas is normally set at approximately the same as the jacket temperature.

The vented gas stream, which contains air, water vapor and possibly a small amount of fines, enters the dust collector that is mounted directly to the Solidaire vent nozzle. Air and vapor pass through the collector bags to customer gas treatment (or atmosphere). Fines carry-over collects on the filter bags and is reversed pulsed back to the Solidaire.

Quotation #M-08-Q-14824-A
Date: April 25, 2008

EXHIBIT "A"

EXECUTIVE SUMMARY

Dust Collector Operation: Filter bags are pulsed at some regular interval or when the dP across the filter bags reaches some set-point. This is a control included on most dust collectors. Generally this dP should be 5-7 inches w.g. for most efficient filtering. The dust collector vessel is generally heat traced (electric or steam) to prevent condensation. We normally would recommend an air to cloth ratio of 3-4 (air in ACFM divided by filter area in feet squared)

Exhaust Fan Operation: An exhaust fan is used to aid in removal of vapors from the dryer by maintaining negative 1-2 inches w.g. static pressure in the Solidaire. This static pressure is maintained via the exhaust fan damper or by variable frequency control of the exhaust fan motor.

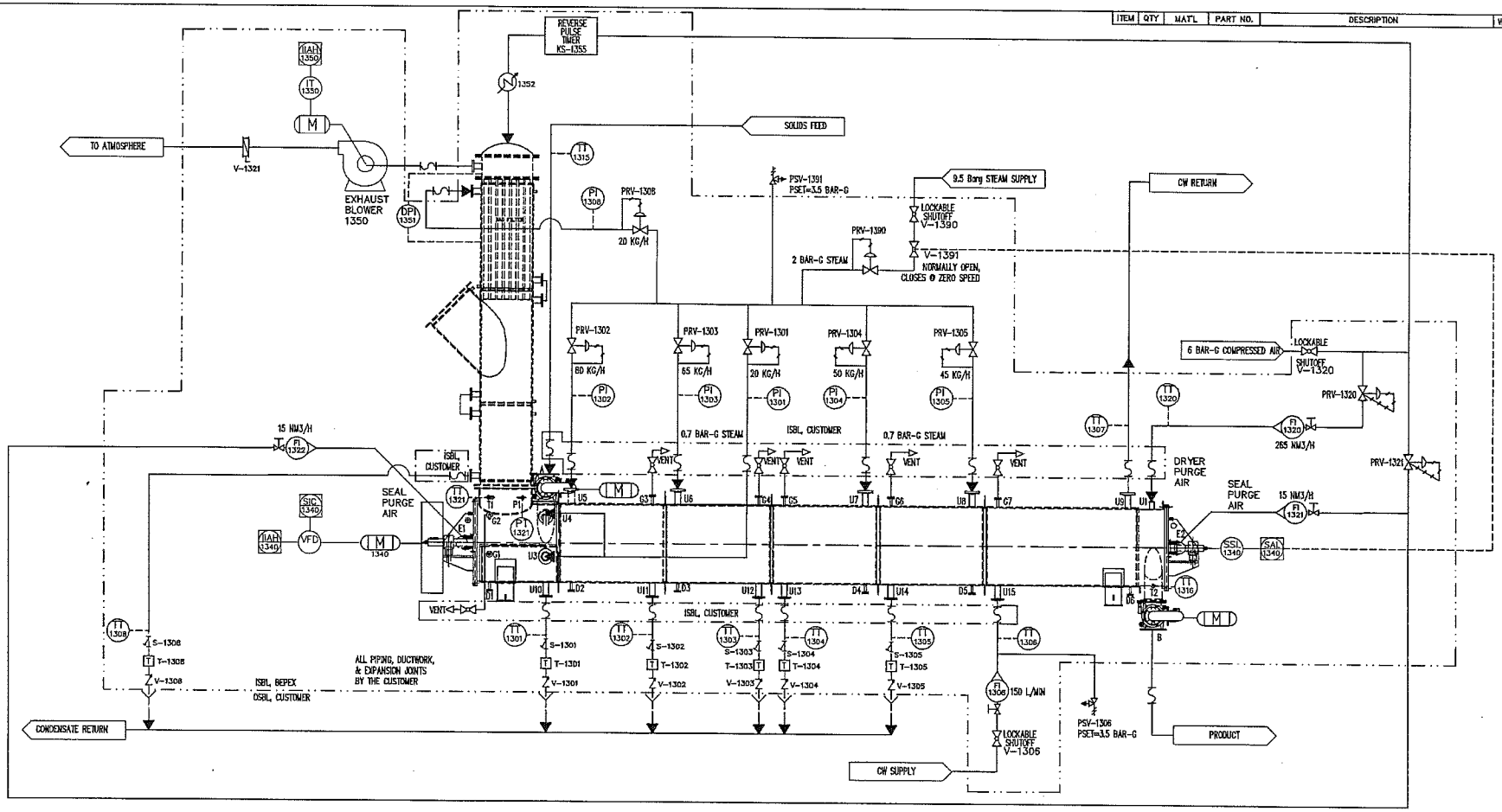

ITEM	QTY	MAT'L	PART NO.	DESCRIPTION	WEIGHT

REV.	DATE	DCN NO	DESCRIPTION	DR	CHK

THIS DRAWING IS THE PROPERTY OF BEPEX INTERNATIONAL LLC AND IS TRANSMITTED IN CONFIDENCE. THE REPRODUCTION, USE OF, OR DISCLOSURE, IN WHOLE OR IN PART, OF THE DESIGN CONTAINED HEREIN IS PROHIBITED WITHOUT THE WRITTEN CONSENT OF BEPEX INTERNATIONAL LLC.

Bepex International LLC

TOLERANCES UNLESS OTHERWISE SPECIFIED		ISO 128 METHOD A
FRACTIONS	±	
DECIMALS	.XX ± .XXX ±	MACH. FIN. UNLESS NOTED
ANGLES	±	
HOLES	+.010, -.005	

USED ON
PART NO.
SIM. TO

TITLE: P&ID
SOLIDAIRE DRYING SYSTEM

APP			SCALE None
CHK			DRAWING NO. / REV
DR	J. Sturas	021607	D SK021607
NEXT ASS'Y			
ORIG. JOB NO.			SHEET 1 OF 2

AutoCAD DRAWING

	PRIMARY LOCATION		INACCESSIBLE TO OPERATOR		FIELD MOUNTED		AUXILIARY LOCATION	
DISCRETE INSTRUMENTS								
SHARED CONTROL & DISPLAY								
COMPUTER FUNCTION								
PROGRAMMABLE LOGIC CONTROL								

ITEM	QTY	MAT'L	PART NO.	DESCRIPTION	WEIGHT

PRIMARY ELEMENT SYMBOLS

A. ANALYSIS
B. BURNER COMBUSTION
C. USER'S CHOICE (1)
D. DIFFERENTIAL
E. VOLTAGE
F. FLOW RATE / RATIO
G. USER'S CHOICE (1)
H. HAND
I. CURRENT (ELECTRICAL)
J. POWER / SCAN
K. TIME, TIME SCHEDULE
L. LEVEL
M. MOMENTARY
N. USER'S CHOICE (1)
O. USER'S CHOICE (1)
P. PRESSURE / VACUUM
Q. QUANTITY / INTEGRATE
R. RADIATION
S. SPEED FREQUENCY / SAFETY
T. TEMPERATURE
U. MULTIVARIABLE
V. VIBRATION, MECHANICAL ANALYSIS
W. WEIGHT, FORCE
X. UNCLASSIFIED (2), X AXIS
Y. EVENT, STATE OR PRESENCE, Y AXIS
Z. POSITION, DIMENSION, Z AXIS

FUNCTION SYMBOLS

A. ALARM
B. USER'S CHOICE (1)
C. CONTROL
D. ———
E. SENSOR, PRIMARY ELEMENT
F. ———
G. GLASS, VIEWING DEVICE
H. HIGH
I. INDICATE
J. ———
K. CONTROL STATION
L. LIGHT / LOW
M. MIDDLE, INTERMEDIATE
N. USER'S CHOICE (1)
O. ORIFICE, RESTRICTION
P. POINT (TEST) CONNECTION
Q. ———
R. RECORD
S. SWITCH
T. TRANSMIT
U. MULTIFUNCTION
V. VALVE, DAMPER OR LOUVER
W. WELL
X. UNCLASSIFIED (2)
Y. RELAY, COMPUTE CONVERT
Z. DRIVE, ACTIVATE, UNCLASSIFED, FINAL CONTROL ELEMENT

PI — INSTRUMENT IDENTIFICATION
102 — INSTRUMENT NUMBER

1. USER'S CHOICE LETTER IS INTENDED TO COVER UNLISTED MEANING THAT WILL BE USED REPETITIVELY IN A PROJECT.
2. UNCLASSIFIED LETTER 'X' IS INTENDED TO COVER UNLISTED MEANING THAT WILL BE USED ONLY ONCE OR TO A LIMITED EXTENT IN A PROJECT.

VALVE/INSTRUMENT LEGEND

GATE VALVE LEVER OPERATED
GATE VALVE HANDWHEEL OPERATED
CONTROL VALVE
PRESSURE REGULATING SELF CONTAINED
PRESSURE REGULATING EXTERNAL TAP
BALL VALVE
CHECK VALVE
SLEEVE
EXPANSION JOINT
GLOBE VALVE
PLUG VALVE
3 WAY VALVE
4 WAY VALVE
PRESSURE RELIEF
FLUSH BOTTOM TANK VALVE
VALVE WITH MOTOR OPERATOR
Y-STRAINER
ROTARY VALVE
BUTTERFLY
NORMALLY CLOSED
NORMALLY OPEN
VACUUM BREAKER
DRAIN
NEEDLE VALVE
STEAM TRAP
KNIFE GATE
PUMP
GAS FILTER
OPPOSED AND PARALLEL DAMPERS
FLOW INDICATOR
VARIABLE AREA FLOW INDICATOR
ROTAMETER FLOW INDICATOR
TURBINE FLOW METER
FILTER
AVERAGING PITOT TUBE
GAS BLOWER
TEMPERATURE GAUGE
PRESSURE GAUGE
SOLENOID OPERATOR
SINGLE PITOT TUBE
MAGNETIC FLOWMETER
ORIFICE PLATE
ELECTRIC HEATER
CYLINDER SPRING RETURN
CYLINDER DOUBLE ACTING
HEAT EXCHANGER SHELL & TUBE OR STEAM COIL
WATER COOLED CONDENSER OR HEAT EXCHANGER
**MOTOR
**AIR MANIFOLD WITH DIAPHRAGM VALVE

LEGEND FLUID POWER

FILTER / SEPERATOR W/AUTOMATIC DRAIN
VALVE: CONTROL FLOW
VALVE: CONTROL PRESSURE/REGULATOR
VALVE: 2 - WAY ACTUATOR: SOLENOID RETURN: SPRING NORMALLY CLOSED
VALVE: 3 - WAY / 2 - POSITION ACTUATOR: SOLENOID RETURN: SPRING NORMALLY CLOSED
VALVE: 4 - WAY / 2 - POSITION ACTUATOR: SOLENOID / PILOTED RETURN: SOLENOID / PILOTED

ABBREVIATION

AS *AIR SUPPLY INSTRUMENT AIR PLANT AIR
ES *ELECTRIC SUPPLY
FC FAIL CLOSED
FI FAIL INDETERMINATE
FL FAIL LOCKED
FO FAIL OPEN
GS *GAS SUPPLY
HS *HYDRAULIC SUPPLY
MAX MAXIMIZING CONTROL MODE
MIN MINIMIZING CONTROL MODE
NS *NITROGEN SUPPLY
WS *WATER SUPPLY
WR WATER RETURN
SS *STEAM SUPPLY
REV REVERSE-ACTING
RTD RESISTANCE TEMPERATURE DETECTOR
MCC MOTOR CONTROL CENTER
HOS **HOT OIL SUPPLY
SOV **SOLENOID VALVE

INSTRUMENT LINE SYMBOLS

PROCESS LINE
INSTRUMENT SUPPLY (*)
UNDEFINED SIGNAL
PNEUMATIC SIGNAL
ELECTRIC SIGNAL
HYDRAULIC SIGNAL
CAPILLARY TUBING
ELECTROMAGNETIC OR SONIC
GUIDED
NOT GUIDED
INTERNAL SYSTEM LINK
MECHANICAL LINK RESISTANCE TE

REV.	DATE	DCN NO	DESCRIPTION	DR	CHK

THIS DRAWING IS THE PROPERTY OF BEPEX INTERNATIONAL LLC AND IS TRANSMITTED IN CONFIDENCE. THE REPRODUCTION, USE OF, OR DISCLOSURE, IN WHOLE OR IN PART, OF THE DESIGN CONTAINED HEREIN IS PROHIBITED WITHOUT THE WRITTEN CONSENT OF BEPEX INTERNATIONAL LLC.

Bepex International LLC

TOLERANCES: UNLESS OTHERWISE SPECIFIED
FRACTIONS ±
DECIMALS .XX ± .XXX ±
ANGLES ±
HOLES +.010, -.005
ISO 128 METHOD A
MACH. FIN. UNLESS NOTED

TITLE: P & ID
PTA DRYING SYSTEM

APP			SCALE NONE
CHK			DRAWING NO. REV
DR	JLS	032706	D SK032706
NEXT ASS'Y			

USED ON
PART NO. SIM. TO ORIG. JOB NO. SHEET 2 OF 2

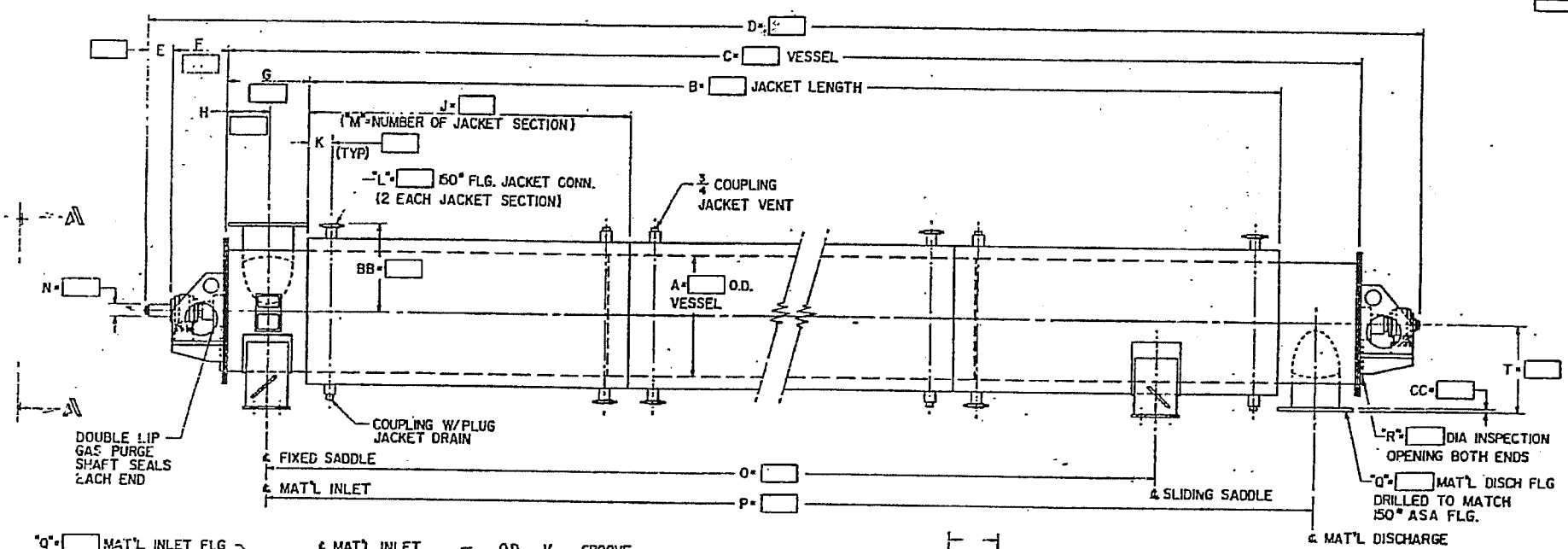

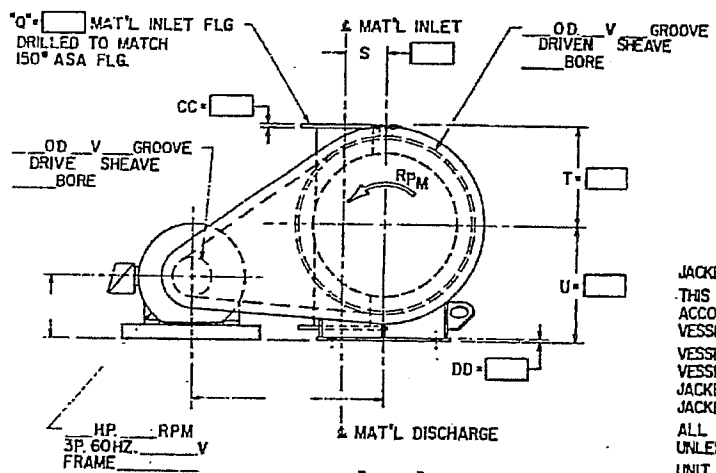

VIEW A = A

JACKET TYPE: _____

THIS VESSEL CONSTRUCTED AND LABELED IN ACCORDANCE WITH ASME UNFIRED PRESSURE VESSEL CODE-SECTION VIII (CURRENT ISSUE)

VESSEL DESIGN PRESSURE ___ PSIG AT ___ °F
VESSEL HYDROSTATIC TEST PRESSURE ___ PSIG
JACKET DESIGN PRESSURE ___ PSIG AT ___ °F
JACKET HYDROSTATIC TEST PRESSURE ___ PSIG

ALL FLANGE BOLTING TO STRADDLE ℄'S UNLESS OTHERWISE SHOWN

UNIT WEIGHT (LESS DRIVE) _____ LBS

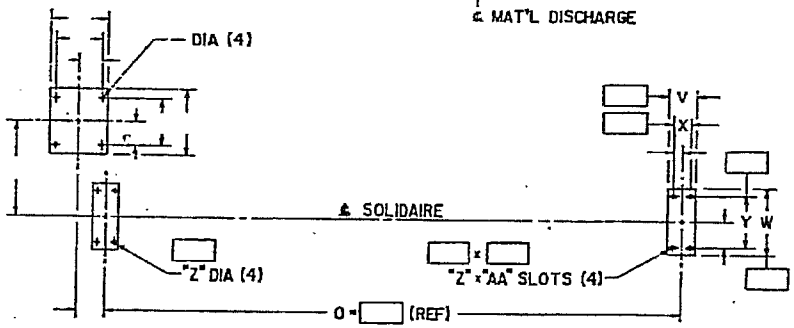

MOUNTING HOLE PATTERN

REV.	DATE	ECN NO.	DESCRIPTION	DR	CHK

bepex corporation

TITLE: SOLIDAIRE ASS'Y

SCALE NONE | DRAWING NO | REV D

MICROFILM SCALE — 3" ON ORIGINAL

TOLERANCES UNLESS OTHERWISE SPECIFIED: FRACTIONS ±; DECIMALS .XX ±, .XXX ±; ANGLES ±; HOLES + .010 − .000

SEE THE METHOD 4

DRAWN FOR BRAND NAME

APP. CHK. DR.

NEXT ASSY. | DWG. JOB NO. | SHEET OF

DIM TO | FAST NO.

Quotation #M-08-Q-14824-A
Date: April 25, 2008

STANDARD UNIT DIMENSIONS FOR SOLIDAIRE MODEL SJS 16-10:

A = 16	B = 120	C = 149	D = 182	E = 5
F = 13.5	G = 14.5	H = 8.5	J = 60	K = 4
L = 2	M = 2	N = 2.5	O = 116.5	P = 132
Q = 6	R = 4	S = 4.7805	T = 13	U = 15
V = 11	W = 16	X = 3.5	Y = 10	Z = 0.688
AA = 1.5	BB = 14.5	CC = 0.375	DD = 0.5	

STANDARD UNIT DIMENSIONS FOR SOLIDAIRE MODEL SJS 30-20:

A = 30	B = 240	C = 280	D = 318	E = 7
F = 14	G = 20	H = 10.5	J = 80	K = 6
L = 3	M = 3	N = 3.18	O = 237	P = 259
Q = 12	R = 4	S = 8.437	T = 22	U = 24
V = 11	W = 28	X = 7	Y = 22	Z = 0.813
AA = 2.5	BB = 23.5	CC = 0.5	DD = 0.5	

Quotation #M-08-Q-14824-A
Date: April 25, 2008

EXHIBIT "D"

EQUIPMENT SPECIFICATIONS

Item	Qty.	Description
200	One	**730-DSY-01 VANADIUM STEAM DRYER - BEPEX SOLIDAIRE MODEL SJS 30-20, FABRICATED IN 316/316L STAINLESS STEEL FOR PRODUCT CONTACT SURFACES, DESIGNED AND CONSTRUCTED AS FOLLOWS:**

A. Rotor construction with manually adjustable conveying paddles. 250 rpm shaft speed. 316/316L stainless steel materials of construction.

B. Vessel body to be cylindrical shaped with flanged end plates. Vessel body and end plates to have insulation clips. Insulation by others. 316/316L stainless steel materials of construction.

C. Jacket is standard plate design, 3 section, designed for steam service. Each section has flanged inlet and outlet connections, one drain coupling connection, and one vent coupling connection. All jacket flanges to be 150#. Carbon steel materials of construction.

D. Shaft seals are double lip design, with Teflon inner seal and Viton outer seal. 5-10 SCFM per seal, purge gas flow rate.

E. Out board bearings are spherical roller, self-aligning, with pillow block housings. Grease lubricated. L-10 life is 50,000 hours

F. Gasket materials are white silicone.

G. Carbon steel saddle supports.

H. Motor Design

Size =	75 hp, 1.15 S.F.
Type =	TEFC
Power =	460 V, 3 Ph, 60 Hz.

I. Drive is belt type, with OSHA approved guard.

Quotation #M-08-Q-14824-A
Date: April 25, 2008

EXHIBIT "D"

EQUIPMENT SPECIFICATIONS

Item | Qty. | Description

J. Mechanical Design:

	Matl's	Design Temp. Max. (°F)	Design Temp. Min. (°F)	Design Press (psig)	ASME U-Stamp
Jacket	CS	400	-20	150	Yes
Vessel Body	316/316L	400	-20	2	No
Rotor	316/316L	400	-20	----	

K. Heat Transfer Surface Area

Jacket 150 ft^2

L. Dimensional Data (approx.) - without motor/drive:

Length = 350 inches
Width = 50 inches
Height = 50 inches
Weight = 8000 lbs

M. Spare Parts to include 2 bearings, lip seals, gaskets, and set of 15 paddles and paddle nuts

Quotation #M-08-Q-14824-A
Date: April 25, 2008

EXHIBIT "D"

EQUIPMENT SPECIFICATIONS

Item	Qty.	Description
210	One	**VANADIUM DRYER DUST COLLECTOR**

A. Reverse pulse type dust collector to be mounted directly on the Bepex Solidaire vent. Filter bags removed through a side access door. Unit to include bag catching grid designed to support one man.

B. All gas/product contact parts to be 316 stainless steel. Polyester filter bags to supply 66 ft2 of filter area.

C. Solid state timer designed for continuous operation with adjustable pulse and dwell time settings. Timer to be mounted in a NEMA 4 enclosure with input of 120-1-60. Differential pressure gauge included.

D. External 304 stainless steel compressed air header assembly complete with three (3) aluminum diaphragm and brass solenoid valves. All pre-piped and wired into a NEMA 4 terminal strip enclosure and mounted on the air header. Estimated compressed air usage will be 4 SCFM @ 90-100 psig.

E. The units housing will have a 304 stainless steel jacket rated for 150 psig steam. This jacket will not cover the clean air section or the filter bag access door. Insulation to be by others.

220	One	**VANADIUM DRYER DUST COLLECTOR FAN**

A. Single inlet centrifugal fan with 316 stainless steel for gas contact surfaces. Gas tight construction, with 316 stainless John Crane shaft seals.

B. 2 hp, 1800 rpm, 460-3-60, TEFC motor with belt drive.

C. The fan will deliver 300 acfm of exhaust air against -10 inch w.g. set point. Fan speed to be 3130 rpm @ 1.17 hp.

Quotation #M-08-Q-14824-A
Date: April 25, 2008

EXHIBIT "E"

UTILITIES

		Uranium Dryer	Vanadium Dryer
(E-1)	STEAM:		
	Quantity (lb/hr): (Design)	165	640
	Quantity (lb/hr): (Maximum)	200	750
	Supply Pressure (psig):	93	93
	Supply Temperature (°F):	333	333
	Condensate Temperature (°F):	333	333
(E-2)	COMPRESSED AIR (each seal):		
	Quantity (SCFH): (Design)	3	5
	Quantity (SCFH): (Maximum)	5	10
	Supply Pressure (psig):	10	10
	Supply Temperature (°F):	Ambient	Ambient
	COMPRESSED AIR (Dust Collector Pulsing):		
	Quantity (SCFH): (Design)	3	5
	Quantity (SCFH): (Maximum)	5	10
	Supply Pressure (psig):	10	10
	Supply Temperature (°F):	Ambient	Ambient

(E-3) MOTOR LIST:

Item No.	Conn. Hp	Approx. Bhp	Motor Rpm	Power Source V/Ph/Hz	Enclosure
100	20	16	1800	460/3/60	TEFC
200	75	60	1800	460/3/60	TEFC
120	2	1.6	1800	460/3/60	TEFC
220	2	1.6	1800	460/3/60	TEFC

Quotation #M-08-Q-14824-A
Date: April 25, 2008

EXHIBIT "F"

PERFORMANCE WARRANTY

F-1: FEED STOCK DEFINITION (Uranium Dryer)

Feed Rate (lb/hr):	**320**
Feed Composition	
$UO_4 \cdot 2H_2O$ (lb/hr)	**192**
Water (lb/hr)	**128**
Solid Specific Gravity:	**6.0**
Moisture Spec. Heat, Liquid (Btu/lb-°F):	**1.0**
Moisture Spec. Heat, Vapor (Btu/lb-°F):	**0.4**
Moisture Latent Heat, Vaporiz. (Btu/lb-°F):	**970.3**
Moisture Mol. Weight:	**18**
Moisture Normal Boiling Point (°F):	**194**

F-3: OPERATING CONDITIONS (Uranium Dryer)

Purge Gas Flow Rate (lb/hr):	**45**
Purge Gas Inlet Temp (°F):	**330**
Inlet Jacket Temp (°F):	**333**
Bed Temp (°F):	**194**
Rotor Speed (rpm):	**500**
EXHAUST GAS	
Flow Rate (ACFM):	**70**
Temperature (°F):	**~190**

F-1: FEED STOCK DEFINITION (Vanadium Dryer)

Feed Rate (lb/hr):	**1273**
Feed Composition	
NH_4VO_3 (lb/hr)	**764**
Water (lb/hr)	**509**
Solid Specific Gravity:	**2.3**
Moisture Spec. Heat, Liquid (Btu/lb-°F):	**1.0**
Moisture Spec. Heat, Vapor (Btu/lb-°F):	**0.4**
Moisture Latent Heat, Vaporiz. (Btu/lb-°F):	**970.3**
Moisture Mol. Weight:	**18**
Moisture Normal Boiling Point (°F):	**194**

F-3: OPERATING CONDITIONS (Vanadium Dryer)

Purge Gas Flow Rate (/hr):	**170**
Purge Gas Inlet Temp (°F):	**330**
Inlet Jacket Temp (°F):	**333**
Bed Temp (°F):	**194**
Rotor Speed (rpm):	**250**
EXHAUST GAS	
Flow Rate (ACFM):	**270**
Temperature (°F):	**~190**

F-2: AMBIENT AIR CONDITIONS

Plant Location:	**Bedrock, CO**
Installation (Indoors/Outdoors):	**Indoors-unheated**
Max. AmbientTemp (°F), W/S*:	**101.5/-20**
Wet Bulb Temp (°F), W/S*:	**25/56**
Barometric Press. (psia):	**12**
Elevation (ft):	**5600**

* Design/Winter/Summer

SOLIDAIRE®

Bepex
Particle Processing Technology

A compact, high efficiency thin film dryer, cooler, heater, reactor.

The Bepex Solidaire is a highly versatile rotor and paddle design for use in continuous drying, heating, cooling, reacting and crystallizing applications.

The unit is capable of high heat transfer, high agitation and adjustable short-to-medium residence times.

Free-flowing solids, slurries and gels can all be processed using the Solidaire, as well as wet cakes from filters and centrifuges. Even heat sensitive materials can be dried.

THE BASIC UNIT

Essentially, the Solidaire consists of a horizontal mechanical agitator rotating within a cylindrical housing. The housing is equipped with a heat transfer jacket which may be constructed for steam or liquid heat transfer media. Jacket operating pressures up to 150 psig are typical. The housing can be designed to operate above or below atmospheric pressure. Attached to the agitator are a large number of narrow, flat, adjustable-pitch paddles which sweep close to the inner surface of the cylindrical housing.
Paddle arrangement and agitator tip speed combine to move material in a thin, annular spiral from inlet to discharge along the housing's inner shell. The result, maximum heat transfer efficiency.

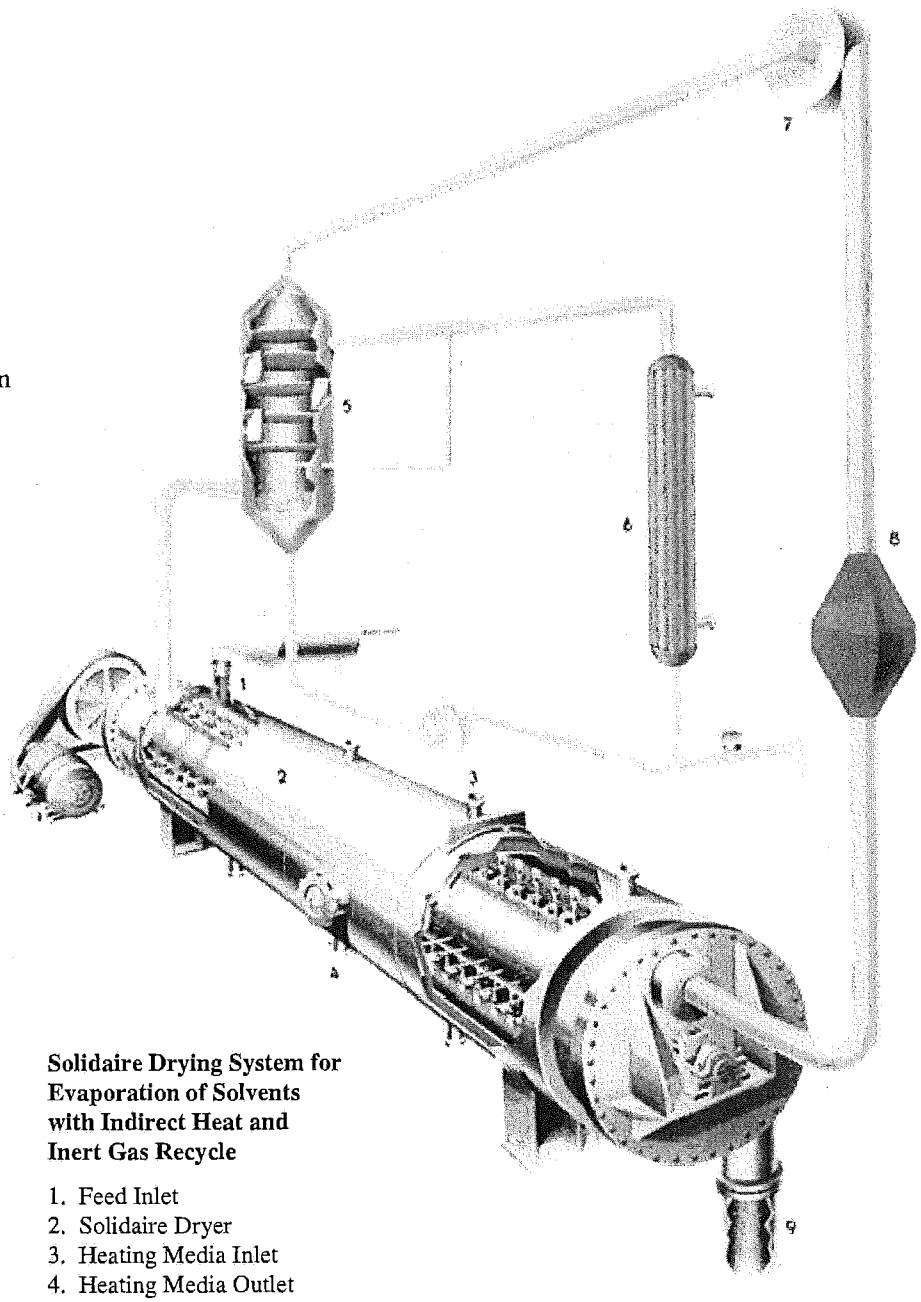

Solidaire Drying System for Evaporation of Solvents with Indirect Heat and Inert Gas Recycle

1. Feed Inlet
2. Solidaire Dryer
3. Heating Media Inlet
4. Heating Media Outlet
5. Scrubber Condenser
6. Pump-around Cooler
7. Recirculating Fan
8. Inert Gas Heater
9. Product Discharge

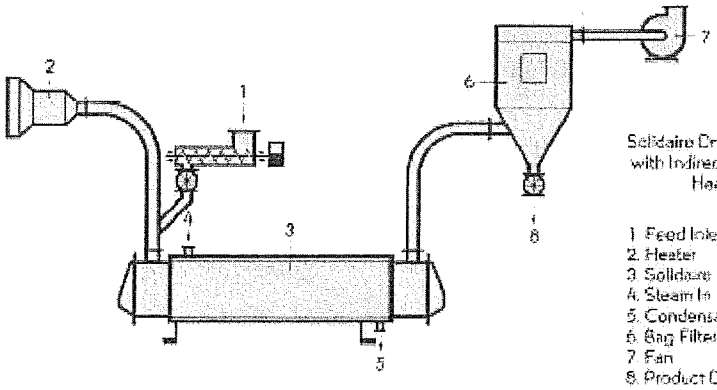

Solidaire Drying System with Indirect and Direct Heat Exchange

1. Feed Inlet
2. Heater
3. Solidaire Dryer
4. Steam In
5. Condensate Out
6. Bag Filter
7. Fan
8. Product Discharge

SOLIDAIRE DRYING SYSTEM WITH INDIRECT AND DIRECT HEAT EXCHANGE

1. Feed Inlet
2. Heater
3. Solidaire Dryer
4. Steam In
5. Condensate Out
6. Bag Filter
7. Fan
8. Product Discharge

WIDE RESIDENCE TIME RANGE/HIGH HEAT TRANSFER COEFFICIENTS

Residence times in the Solidaire can be varied from seconds to approximately 20 minutes by adjusting paddle pitch or by changing rotor speed.

High paddle tip speed (2,000-4,000 fpm) creates turbulence in a thin material layer, breaking up agglomerates and continually exposing new surfaces. Increased heat and mass transfer are the result, with heat transfer coefficients on the order of 20-100 BTU/Hr/Ft^2/°F possible.

THREE OPERATING MODES

The Solidaire operates in three basic heat-source modes.

•Heat can be transferred indirectly through the cylindrical housing wall by conduction.
•Direct heat transfer can be achieved by convection, using a gas flow as the heat source.
•Various combinations of direct and indirect heat provide a third method.

Either indirect heat or a combination of direct and indirect heat can be provided to minimize heat consumption.

MECHANICAL SIMPLICITY

With fixed heat transfer surfaces and outboard bearings and seals, the Solidaire requires minimal maintenance when compared to other indirect dryers.

TYPICAL PROCESSING MODES

Indirect Heat

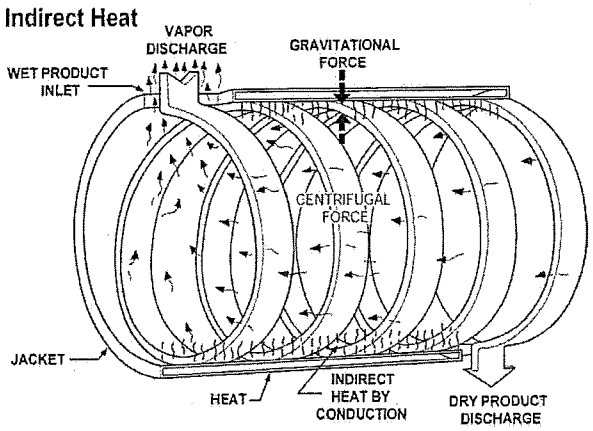

Direct and Indirect Heat

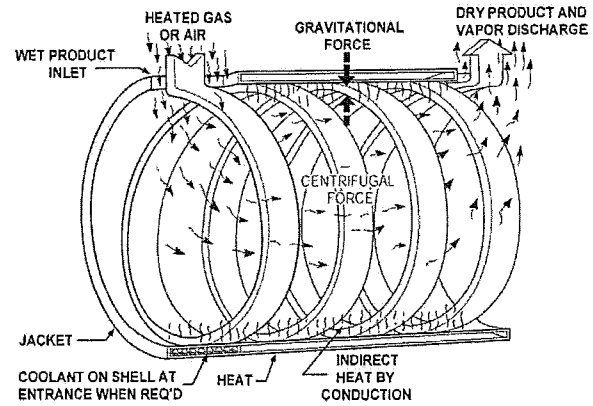

Bepex
Particle Processing Technology

APPLICATIONS

Food and Pharmaceuticals
Artificial Sweeteners
Coagulated Blood
Coffee Grounds
Fish Protein
Food Mixes
Food Seasonings
Grain Products
Starch Products
Tobacco
Vitamins

Chemicals
Acids, Organic
Agricultural Chemicals
Ammonium Diurinate
Ammonium Nitrate
Charcoal
Detergent Intermediates
Diatomaceous Earth
Gypsum
Isophthalic Acid
Magnesium Dioxide
Magnesium Phosphate
Terephthalic Acid
Zinc Hydroxide

Polymers
ABS
Acetal Resin
Butadiene Styrene Latex
Cellulose Acetate
Carboxymethylcellulose
Nylon
Polycarbonate
Polyester
Polyethylene
Polypropylene
Polyvinyl Acetate
Polyvinyl Chloride

BENEFITS OF THE SOLIDAIRE PROCESSING SYSTEM

- Thin Layer Processing
- High Heat Transfer Coefficient
- Maximum Drying Efficiency
- Product Versatility
- Application Versatility
- Wide Residence Time Range
- Mechanical Simplicity

Model	Dimension Inches			Diam In	RPM Range		RPM Range		Jacket Area SF	Cross Section Area SF	Approx Shipping Weight lbs
	A	B	C		Min	Max	Min	Max			
8-4	104	14	18	8	350	1520	3	5	8	0.30	600
10-6	116	16	20	10	400	1050	3	10	15	0.45	1,275
16-10	168	22	28	16	250	660	5	15	40	1.25	1,900
24-12	210	40	40	24	170	460	10	50	70	2.30	5,500
24-14	234	40	40	24	170	460	10	50	82	2.30	6,100
24-16	258	40	40	24	170	460	10	50	98	2.30	6,750
30-14	240	48	46	30	144	360	15	75	105	3.70	8,200
30-16	264	48	46	30	144	360	15	75	120	3.70	9,000
30-20	312	48	46	30	144	360	15	75	150	3.70	10,500
36-16	269	54	52	36	130	310	20	100	145	5.30	11,100
36-20	317	54	52	36	130	310	20	100	180	5.30	13,150
36-22	341	54	52	36	130	310	20	100	200	5.30	14,000
42-16	273	60	58	42	100	280	30	100	170	7.20	15,200
42-22	345	60	58	42	100	280	30	100	235	7.20	19,100
42-26	393	60	58	42	100	280	30	100	280	7.20	22,400
48-30	447	66	66	48	100	260	30	125	340	7.70	25,600
54-34	512	72	74	54	90	240	40	150	470	10.0	43,000
60-38	568	78	81	60	75	200	60	200	585	12.6	51,000
72-38	592	90	93	72	65	175	60	250	715	15.7	71,300
72-45	668	90	93	72	65	175	60	250	840	18.7	83,000
88-50	746	100	105	88	50	100	75	300	1150	25.0	92,700

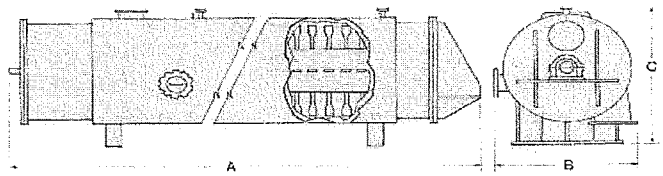

OPTIONAL CONFIGURATIONS

Depending upon your individual needs, Bepex can help you set up a variety of processing arrangements using various combinations of heaters, condensers, cooling systems, fans and filters.

To determine the Solidaire configuration best suited for your particular product, Bepex maintains a variety of units at its laboratory to test heat transfer and drying characteristics. These characteristics, together with other influencing factors, are evaluated to ascertain the required system for your product. Bepex also has rental units available for pilot testing at customer plants.

Product Sales and Testing, Manufacturing, Parts and Service
333 NE Taft Street, Minneapolis, MN 55413
612-331-4370•1-800-607-2470•Fax: 612-627-1444

3. FARR BAGHOUSE

CH2MHILL

FARR
Air Pollution Control

Date: Mar 11, 2008

Pinion Ridge 365541

Model GS16 Shown

QUOTATION

FARR GOLD SERIES® Modular Dust Collector

- Looks like a safe because it's built like a safe!
- The Gold Series utilizes Gold Cone cartridge technology to deliver clean air and long life while utilizing the smallest floor space of any dust collector available today.
- Enhanced performance features with ease of installation and service make the Gold Series the ultimate choice for cleaning the work environment of irritating dust and fumes.

Model: GS72/60
Quantity: 1
Filter Quantity: 60
System Volume Rating: 39,000 CFM @ 10.00 Inches SP
Application: Ore Dust

Gold Cone® Filters

- Gold Cone filters have an expanded capacity due to the patented inner cone of filtration media.
- The inner cone provides uniform dispersion of back-pulsed air and opens up more useable space for airflow in the dust collector.
- Multiple filter media options and pleat spacing are available to best suit your specific application and dust.
- All Farr filter media offerings deliver a minimum of 99.99% separation efficiency down to 0.5 micron by weight.

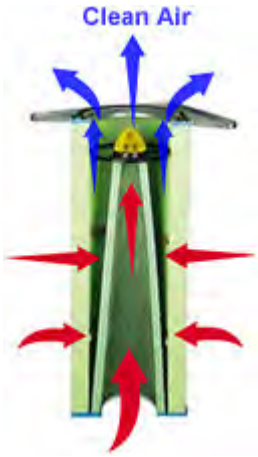

Housing

- Gold Series module is constructed of 7 gauge steel.
- Door, hopper, inlet and panels are all of 10 gauge steel.
- Most other dust collectors on the market are only 12 gauge or thinner.
- Hopper has standard 60 degree slope with 10" discharge(s), unless otherwise specified herein.

High Entry Inlet

- Farr's high cross flow inlet eliminates upward can velocities associated with traditional hopper inlets.
- Channel baffles installed in the inlet protect the filters from incoming dust and separates the larger dust particles directly into the hopper, reducing the load on the filters.

Powder Paint Finish

- Baked on, durable Dupont ® powder coat paint. All carbon steel components are 5-stage acid washed prior to powder coating for maximum adhesion of the paint. The paint color shall be Farr Green.
- Painted inside and outside for for weather/corrosion resistance, unless otherwise specified.

Automatic Filter Cleaning

- Filters are automatically back-flush cleaned with periodic pulses of compressed air.
- Vertical design of the Farr cartridges provides more efficient pulsing of dust, thus eliminating uneven dust loading associated with horizontally mounted cartridges.
- Powerful cleaning system delivers 100% more cleaning energy than horizontal filter designs and includes: 6" compressed air header, nozzled purge pipes, diaphragms, and solenoid valves in NEMA 4 enclosure. Diaphragms are factory plumbed to the solenoids.

Filter Access

- Tool-less quick-open access door(s) to super-fast cartridge change-out system that does not require entry into the collector.
- Cam-operated clamp bars provide easy filter clamping and sealing.
- Most competitive units use a laborious threaded handle system for door removal, in which knobs can be lost and threads can bind.

Support Leg Structure

- 54" clearance under the hopper discharge flange.
- Designed for seismic zone 3 and 100 mph wind load.

HemiPleat Cartridges - Polytech Std Green

- This revolutionary pleat allows 100% of the filter media to remain open for dust capture and improved airflow
- The open pleats also allow the dust to be cleaned better by the pulse system
- Utilizes Polytech Standard Green media providing 19,500 sq. feet for an A/C ratio of 2.0:1

Large Pyramid Hopper

- This optional design reduces the number of dust discharge points for a given model, minimizing collection devices such as drums or bins.

Staggered Channel Inlet Baffle

- Installed in the high entry cross-flow inlet plenum. Provides diffusion of inlet air stream and protects the cartridges from coarse and mildly abrasive materials.

Increase Leg Length - 3 Extra Feet

- Standard hopper clearance is 54 inches. This adder increases the clearance by 3 feet.

Hopper Viewport (8" Dia)

- Hinged, quick-open aluminum view port with Plexiglas window. One per hopper. Provides tool-less access to clean out hopper.

Platform and Ladder

- Provides permanent access to cartridge access doors in the filter module.

Self Dumping Hopper (SDH) - 2 cubic yard capacity

- The SDH provides a hopper that allows the user to remove large volumes of dust from the bottom of the dust collector via a fork truck, and then simply pull a lever to dump the hopper into a larger waste container. Includes sealed lid, 14” slide gate under dust collector, and quick disconnect flex hose.

(3) Special Abrasion Resistant Inlets for Mining

UHMW wear liner for inlets

Heavy Duty Copper solenoid valve connectors.

100 HP Top Mounted Fan - Class IV 406 PLR
Arrangement 4 w/ Outlet damper

(2) Severe Duty Rotary Air Valves -HD 12" R.A.V.
1 HP TENV motor, Mill & Chemical Spec

(2) 12 x 12 Pneumatic Slide Gates

Integrated Control Panel - Main fusable disconnect
100 HP Soft Start; (2) 1 HP Motor Starters w/ short circuit & overload protection
AB programmable Logic Controller
FARR FDC Pulse Controller
(3) H/O/A Selectors for fan and air locks
(3) Motor run pilot lamps
(4) Alarm Indicator lamp
(1) Auto/Off continuous selector for pulse cleaning

Additional set of (60) Gold Cone Filters

Total Price FOB Shipping Point

Freight to Bedrock, CO (budget)

The customer assumes the responsibility for contacting their insurance underwriter and advising Farr APC in regard to specific application requirements of explosion venting or if additional fire protection and safety equipment may be required. The buyer is also cautioned to adhere to prescribed OSHA, NFPA, Federal, State and Local codes and regulations applicable to industrial ventilation systems, which Farr APC equipment may be applied on.

***

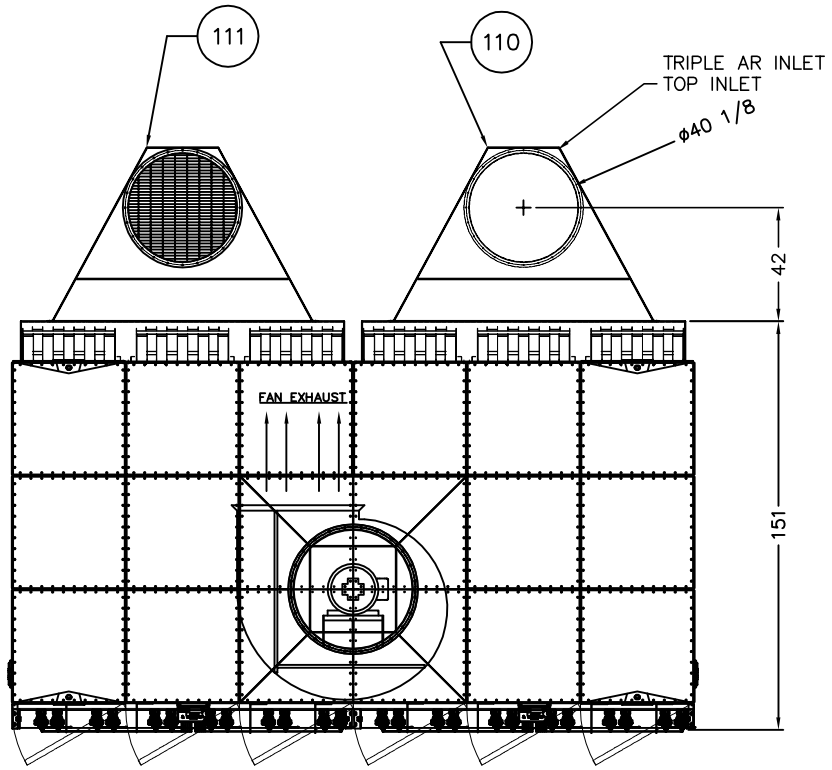

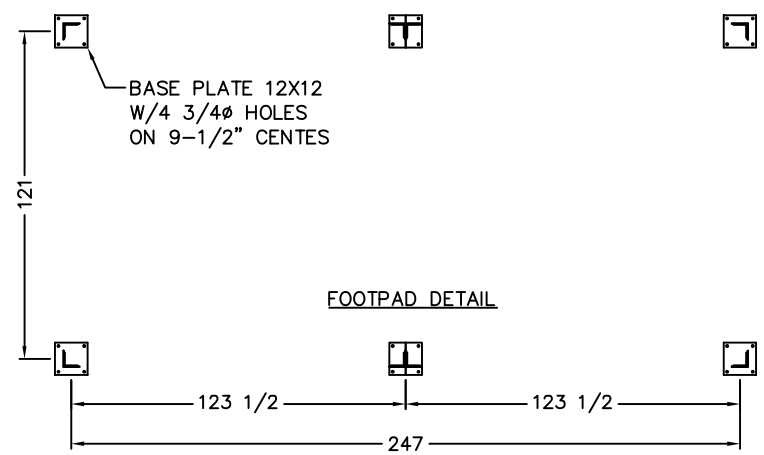

MODEL: GS72/60

FINISH: LIGHT GRAY RAL 7035

APPLICATION DATA:

FILTERS: HEMIPLEAT GOLDCONE
W/325 SF MEDIA

CFM: 40,050 @ 11"W.G.
AIR-TO-CLOTH RATIO: 1.92:1
DUST LOADING: N/A

APPLICATION: CRUSHERS AND CONVEYORS

SHIPPING INFO:

EQUIPMENT END USER: PHELPS

SHIP ALL FILTERS IN BOXES IN
INCLOSED TRUCK.

SHIP A/R INLET AND TRIPLE INLET
LOOSE.

SPECIAL DESIGN FEATURES
(1) COPPER TUBING CONNECTIONS TO DIAPHRAGM VALVES.
(2) DIAPHRAGM VALVES WITH COMPRESSION PORT FITTINGS.
(3) DUAL 8" ACCESS DOORS W/ 6" VIEWPORTS IN CLEAN AIR PLENUM.
(4) BLOWER HAS A PREMIUM EFFICIENCY, SEVERE DUTY/CHEMICAL PROCESSING RATED MOTOR.
(5) ABRASIVE INLET USES STANDARD K&B ANGLE RINGS.

QTY	ITEM NO.	DRAWING NO	PART DESCRIPTION
1	101	212900004	GS72/60 BOM,COPPER LINES,VWPRT,UN
2	102	212907002	GS HOPPER 3X3 12" DIS, 97"H,7GA,UNP
1	103	215189001	GS SUPPORT ASSY, 174-1/8"H
2	104	206314007	GS HOPPER TO FILT KIT 3X3
1	105	212909001	LEG BOLT KITS
60	106	211497005	GS FLTR ELEMT HMPTU-325
2	107	212615001	ROTARY AIR LOCK 12"X12"
1	108	205768072	GS72 SUPPORT HARDWARE KIT
1	109	215190001	FAN PANEL, FOR 100 HP NYB
1	110	215191001	GS INLET,AR,TRPL,40",UHMW
1	111	215191002	GS INLET,AR,TRPL,40",UHMW,GRATING
110 LBS	112	208165044	PNT,PWDR LIGHT GRAY RAL7035
10 GAL	113	215159044	PNT,ENAM LIGHT GRAY RAL 7035
5 GAL	114	004038343	PRIMER ENMAR 460-072 GRAY
1	115	215170001	CONTROL PANEL, AUTO-OUT, PHELPS
1	116	215204001	REGULATOR,COMPRESSED AIR,1" NPT, WILKERSON
1	117	203364002	VALVE, BALL 1"
1	118	215192001	PRESSURE SWITCH
1	119	215349001	FAN MOUNTING HARDWARE KIT
1	120	215350001	AIRLOCK MOUNTING HARDWARE KIT

SPECIFICATIONS:
1. MODULAR CONSTRUCTION FROM 10 Ga & 7 Ga. HRCS.
2. SOLID STATE TIMER CONTROLS REQUIRE 120/240 VAC SINGLE PHASE 50/60 HZ.
3. SOLENOIDS REQUIRE 120/1/60 VAC.
4. NEMA 4 RATING ON ELECTRICAL ENCLOSURES.
5. CLEANING SYSTEM REQUIRES 6.0 CF PER VALVE PER PULSE OF CLEAN DRY COMPRESSED AIR AT 90 PSI.
6. HOUSING IS RATED FOR +/- 25" W.G.
7. WEIGHTS: COLLECTOR & FILTER: 13,420
HOPPERS: 5342
SUPPORT: 2200
FAN: 3511
AIRLOCKS: 1150
TOTAL WEIGHT: 25,623

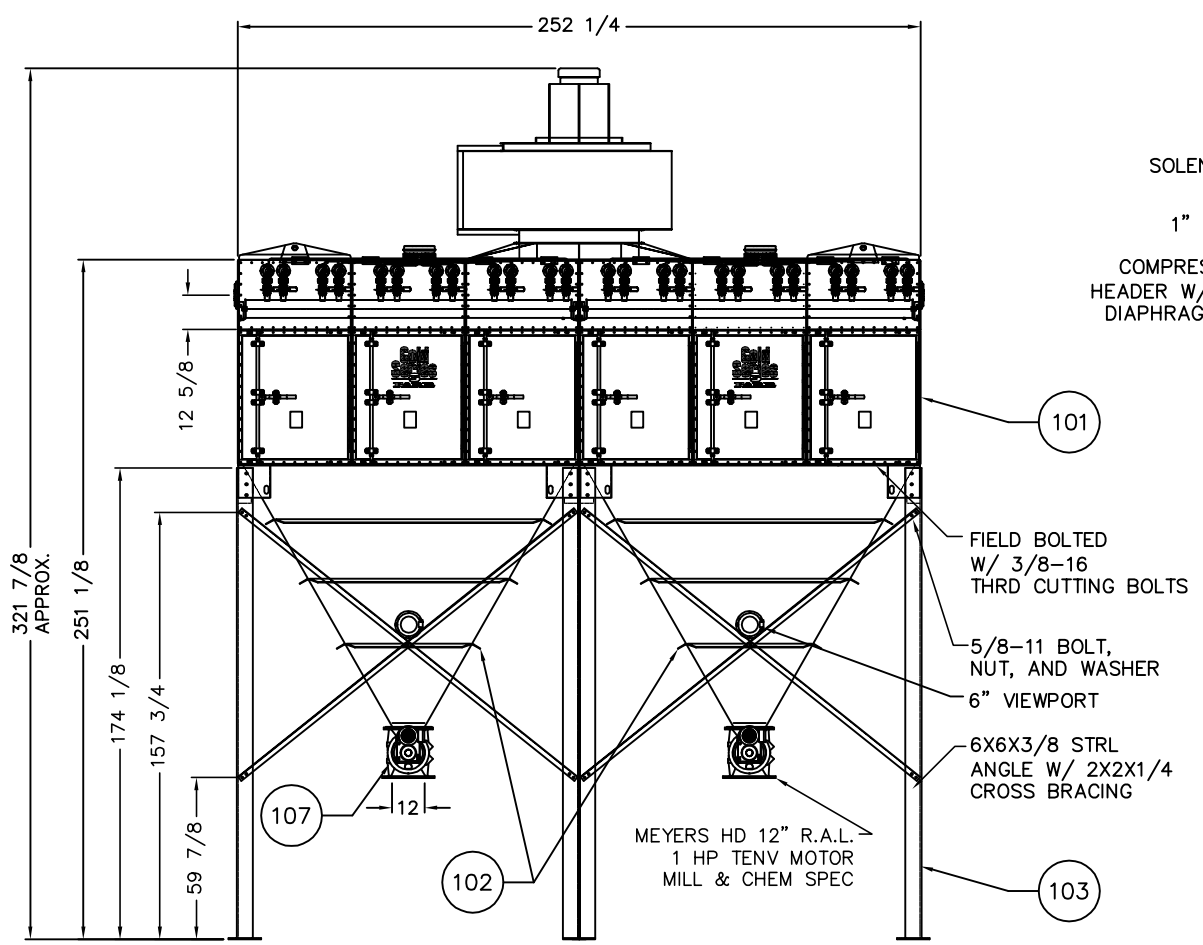

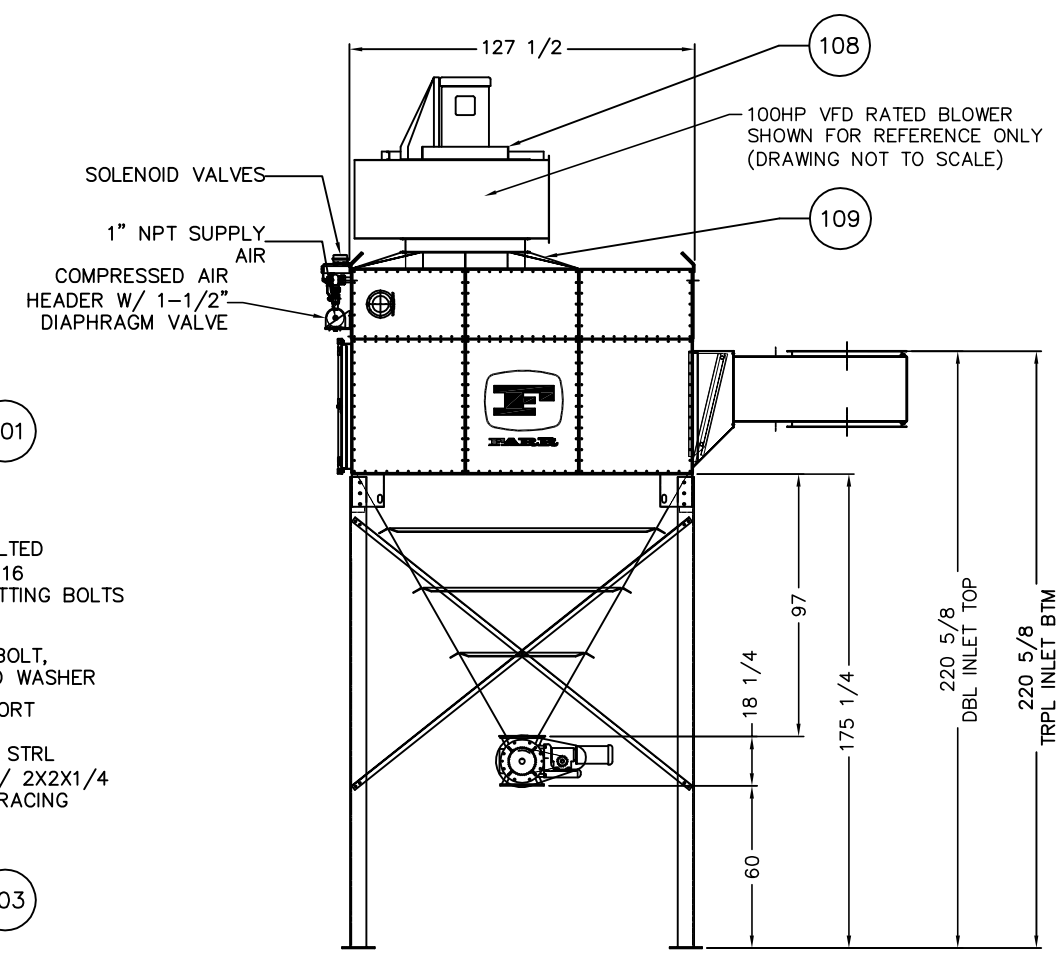

**THE CUSTOMER ASSUMES THE RESPONSIBILITY FOR CONTACTING THEIR INSURANCE UNDERWRITER AND ADVISING CAMFIL/FARR IN REGARD TO SPECIFIC APPLICATION REQUIREMENTS OF EXPLOSION VENTING OR IF ADDITIONAL FIRE PROTECTION AND SAFETY EQUIPMENT MAY BE REQUIRED. THE BUYER IS ALSO CAUTIONED TO ADHERE TO PRESCRIBED OSHA, NFPA, FEDERAL, STATE AND LOCAL CODES AND REGULATIONS APPLICABLE TO INDUSTRIAL VENTILATION SYSTEMS, WHICH CAMFIL/FARR EQUIPMENT MAY BE APPLIED ON.

REV	DATE	DESCRIPTION	DISP	EWO	DFT	CK	APP
A	11-15-07	FIRST ISSUE	-	-	DG		

UNLESS OTHERWISE NOTED:
DIMENSIONS ARE IN INCHES
INSIDE BEND RADII = 1 METAL THICKNESS
TOLERANCES ARE:
1 PLACE DECIMAL ± 1/8
2 PLACE DECIMAL ±
3 PLACE DECIMAL ±
ANGULAR ±

DO NOT SCALE PRINT

MAC PAC DATA

PROD CLASS SUB CLASS	UNIT OF MEASURE
4020	EA

CROSS REF -
NEXT ASSEMBLY
SCALE 1:36

GS72/60 DUST COLLECTOR
W/ 100 HP FAN

SITE	SHEET	SIZE	DRAWING NO.	REV
JB-Eng	1 OF 3	D		

MORSER REVISION B

The New York Blower Company

Fan-to-Size
Fan Selection Data

Project:	365541
Location:	PINION RIDGE
Contact:	

Fan Tagging: FARR APC

Fan Design

Product:	Backward Inclined SWSI Class IV	Arrangement:	4
Size/Model:	406	Drive type:	Direct
Wheel Type:	PLR	AMCA Performance Class:	4
Wheel Material:	Mild Steel		
Wheel Width:	74.0 %	Wheel Diameter:	100.0 %

The fan housing width (M) for this narrow-width fan will be 26.75 inches. This is a reduction of 3.625 inches from standard. Please adjust related full-width drawing dimensions such as H, O, R, and Q accordingly.

Operating Conditions

Volume Flow Rate:	39,000 CFM	Fan Speed:	1770 rpm
Fan Static Pressure:	10.0 in wg	Fan Input Power:	92.8 bhp
Outlet Velocity:	4678 ft/min	VP/SP ratio:	0.1117
Altitude (above mean sea level):	5,600 ft	Operating Temperature:	70 Deg F
Operating Inlet Airstream Density:	0.0613 lb/ft3		
Maximum Operating Temperature:	70 Deg F	Maximum Safe Operating Speed:	1945 rpm

Operating cost is $11,201.00 for 2,080. hours with a 90% efficient motor when energy unit cost per kW-hr is 0.07

Air performance data modified for these fan accessories/configurations:

Outlet Damper

Conditions at 70 Deg F and 5,600 ft

Volume Flow Rate:	39,000 CFM	Fan Speed:	1770 rpm
Fan Static Pressure:	10.0 in wg	Fan Input Power:	92.8 bhp
Density at Altitude (5,600 ft) :	0.0613 lb/ft3	Max. Safe Speed at 70 Deg F:	1945 rpm

Sound Power Level Ratings Levels expressed in dB (power levels reference 10^(-12) watts)

Center Frequency (Hz):	**63**	**125**	**250**	**500**	**1000**	**2000**	**4000**	**8000**	
Octave Bands:	**1**	**2**	**3**	**4**	**5**	**6**	**7**	**8**	**Overall**
Total Fan Power Levels*:	118.1	117.7	117.1	113.1	110.1	106.1	100.4	96.1	123.2
Inlet Power Levels**:	115.1	114.7	114.1	110.1	107.1	103.1	97.4	93.1	120.2
Outlet Power Levels**:	115.1	114.7	114.1	110.1	107.1	103.1	97.4	93.1	120.2

*As corrected for point of operation (location on fan curve)
**Unsilenced Inlet and Outlet power ratings are 3 dB lower than total fan power levels under the assumption that "half" of the sound power can be attributed to each opening. Silenced power ratings include this 3 dB reduction as well as the silencer attenuation.

Estimated Sound Pressure Levels Expressed in dB (pressure levels reference $2x10^{-7}$ microbar)

Directivity/Reflection Factor (Q) is 2, hemispherical radiation; Distance is 5 ft.; A-weighting is in use.

The estimated sound pressure level outside the fan due to an open inlet OR outlet is 101.1 dBA at 5.0 feet. The estimated sound pressure level outside the fan when BOTH inlet and outlet are ducted is 88.0 dBA at 5.0 feet (Housing Radiated Noise).

Your Representative:
Airsystem Sales, Inc.; PO BOX 171365; Memphis, TN 38120-1365; Phone: (662) 890-8961; Fax: (662) 890-8964; E-Mail: swilliams@airsystemsales.com

365541

The New York Blower Company

Fan-to-Size

Backward Inclined SWSI Class IV
406 PLR, 74.0% Width
Class: 4; Arr.: 4
Outlet Damper
Tag: FARR APC

Volume Flow Rate: 39,000 CFM
Fan Static Press.: 10.0 in wg
Speed: 1770 rpm
Power: 92.8 bhp

Temp.: 70 Deg F
Altitude: 5,600 ft
Density: 0.0613 lb/ft3
Outlet Velocity: 4678 ft/min

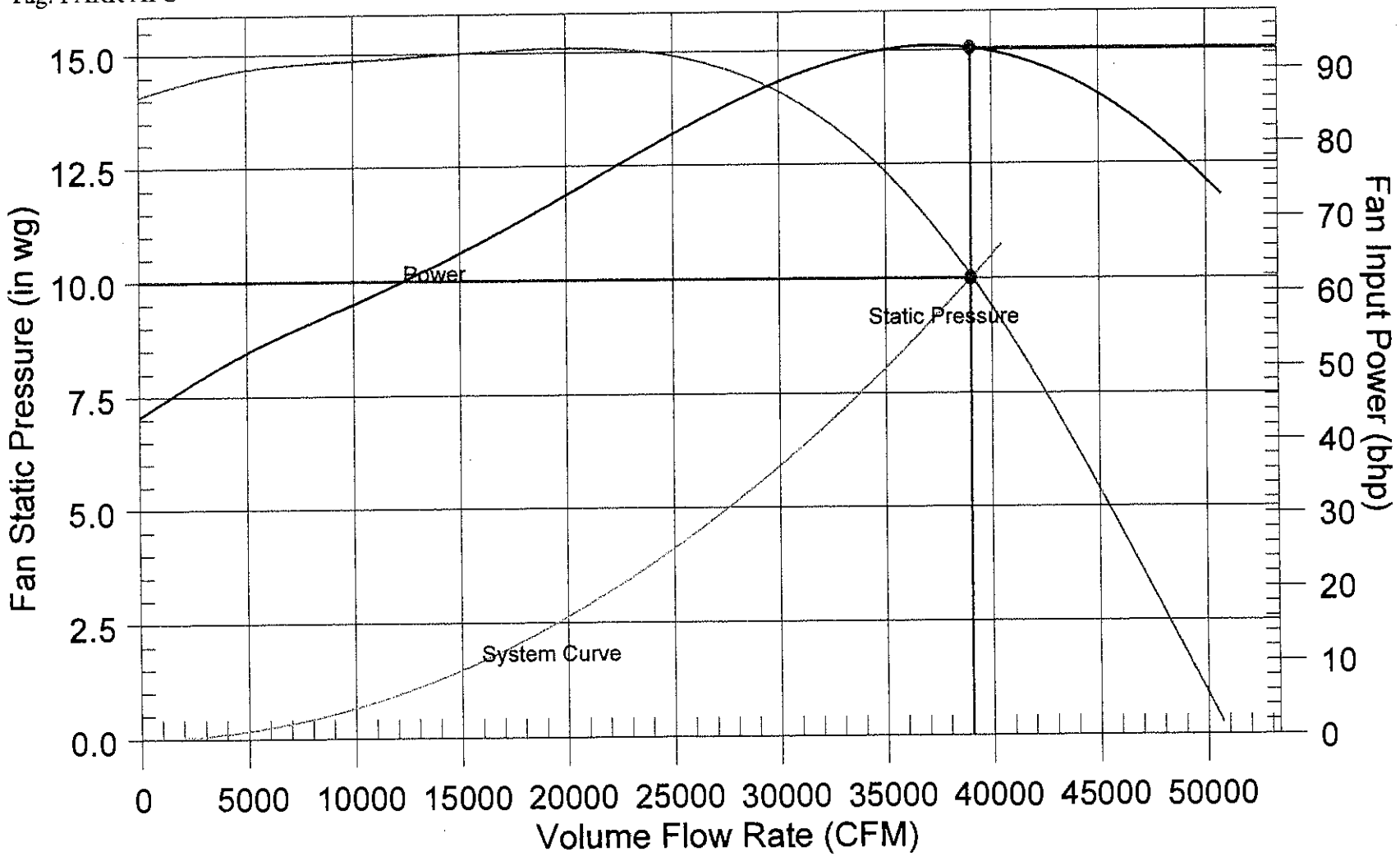

[v1.74.85-R -- October 2007] Date Printed: 3/10/2008

Copyright ©1999 The New York Blower Company.

Your Sales Representative:
Airsystem Sales, Inc.
Phone: (662) 890-8961

Version: 1.74.85-R (October 2007)

Printed: 03/10/2008 PDF. Calc Mode: 2

365541

4. HEIL SCRUBBERS

SERIES 730
COUNTERCURRENT SCRUBBERS

Series 730 Countercurrent Scrubbers

The Heil Series 730 Countercurrent Scrubber is specifically designed to efficiently remove corrosive, noxious and/or nuisance gases from process or ventilation air streams.

The air stream entering the scrubber is first contacted by the scrubbing solution as it drains from the packed bed to the integral sump below. A spray header located above the packing properly distributes the scrubbing solution across the top of the packing. The air stream then moves upward through the packed bed countercurrently to downward flowing liquid. Traveling a torturous route through the packing extends the contact time between air and liquid, as well as increasing the intimacy of gas/liquid contact.

The type of gas and the desired removal efficiency will determine the bed depth, packing size, irrigation rate and chemical requirement.

The gas then passes through the liquid spray above the packing. Prior to leaving the scrubber, the scrubbed air passes through a mist eliminator (Heilex EB 2-Bend Mist Eliminator Blades or mesh pad) to remove entrained droplets.

Series 730 Applications

Heil Series 730 Countercurrent Scrubbers are ideally suited for service in a wide variety of applications in industries such as chemical, pulp & paper, steel & metal finishing, fertilizer, and pharmaceutical. In addition, the Series 730 Countercurrent Scrubber has been used successfully for the control of odors generated in water and waste water treatment, laboratory exhausts, heat transfer, and degassifying.

The Series 730 Countercurrent Scrubbers are effective for the removal of corrosive and/or noxious fumes, and mists (5-7 microns and larger) from a gas stream.

Series 730 Features

Principal features of the Series 730 Countercurrent Scrubber are:

High efficiency — Proper sizing of the unit, selection of packing and packing depth, irrigation rate, and chemical feed can result in efficiencies of 99% or better. Standard units contain 2, 5½, or 10 feet of packing. Units are custom designed to the specific requirements of each individual application.

Low initial cost — Pre-engineered standard designs are available from 400 CFM to 65,000 CFM.

Low operating cost — The static pressure drop at the rated capacity is less than 4"w.c. for the standard 5½ deep bed. In addition, scrubbing solutions can be recirculated using the integral pump. This reduces fresh water consumption and eliminates the need for extra tankage for the scrubber solution.

Versatile — The Series 730 Countercurrent Scrubber is designed to handle a wide variety of applications from removal of acid gases to degassifying a contaminated liquid. Units can be staged in series to achieve maximum efficiencies even on the most difficult applications.

Extended service life — The Series 730 Countercurrent Scrubber has been designed with maximum corrosion resistance as a primary consideration. The wide selection of corrosion resistant materials feature Rigidon FRP (fiberglass reinforced plastic) as a standard material with stainless steel and other alloy construction available.

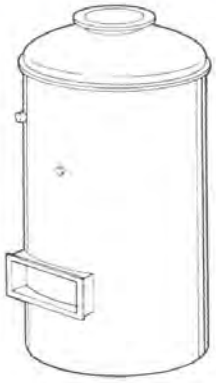

Series 730 Equipment Selection

The key factor in selecting the right countercurrent scrubber for a given application are gas volume to be ventilated, type of contaminant(s) present, quantity of contaminant present, and the required removal efficiency.

Heil's engineers will gladly assist in the selection of a countercurrent scrubber, as well as sizing and selection of accessory items, such as pumps, fans, chemical feed systems, etc. to make a complete scrubber system.

Heil's engineers will then provide a specific quotation on the appropriate scrubber and/or system.

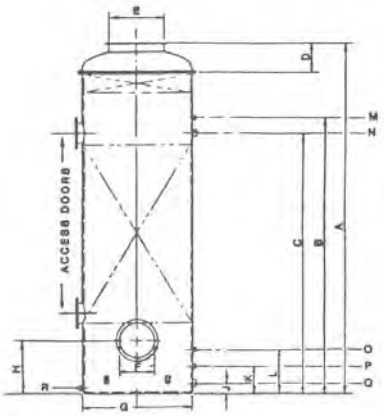

731 THRU 733

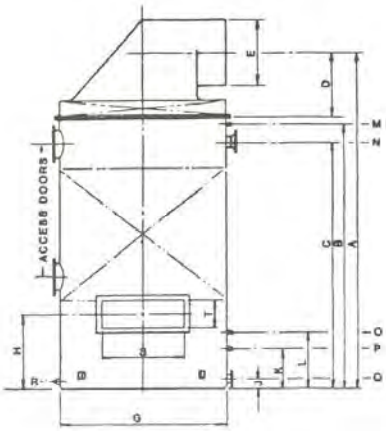

734 THRU 7312

SIZE	CFM	GPM	A	B	C	D	E	F	G	H	J	K	L	M	N	O	P	Q	R	S	T
731	400	5	128	110	107	6	6	6	12	28	2	16	20	3/8	1	1	1½	2	1½	–	–
731.5	1000	11	130	111	111	7	10	10	18	30	2	16	20	3/8	1	1	1½	2	1½	–	
732	1700	19	135	114	112	9	12	12	24	31	2	16	20	3/8	1	1	1½	2	1½	–	–
732.5	2600	30	140	118	115	10	14	14	30	32	2	16	20	3/8	1½	1	1½	2	1½	–	–
733	3700	43	146	123	117	11	16	16	36	33	2	16	20	3/8	1½	1	1½	2	1½	–	–
734	6500	75	157	124	116	23	20	–	48	32	3½	18	22	½	2	1	2	3	2	30	12
735	10000	120	161	126	122	25	24	–	60	34	3½	19	24	½	3	1½	2	4	2	45	12
736	15000	170	178	134	132	34	30	–	72	38	3½	19	24	½	3	1½	2	4	2	42	21
737	20000	230	179	138	137	31	36	–	84	42	6¼	23	29	½	4	1½	2	6	2	52	21
738	25000	300	182	138	140	34	42	–	96	42	6¼	23	29	½	4	2	3	6	2	62	21
739	34000	380	182	138	135	34	42	–	108	42	6¼	23	29	½	6	2	3	6	2	72	21
7310	42000	480	199	140	138	49	48	–	120	44	7½	26	32	½	6	2	3	8	2	82	21
7311	50000	600	200	144	141	46	54	–	132	46	7½	26	36	¾	6	2	4	8	2	96	24
7312	65000	720	197	144	142	43	60	–	144	48	7½	26	36	¾	6	2	4	8	2	120	24

NOTES: (1) Dimensions are nominal and are based on 5' 6" packed bed.
(2) Outlet configurations shown are standard. Dished heads are available in all sizes.

HEIL PROCESS EQUIPMENT

Heil Process Equipment
34250 Mills Road
Avon, Ohio 44011
Phone: (440) 327-6051
Fax: (440) 327-7088

Important - The data and information represented herein refers to typical values by the methods or apparatuses indicated and should be so considered. Since processing variables are a major factor in product performance, this information should serve only as a guide. Any information presented herein should not be assumed to be free of patent coverage nor taken as an inducement or encouragement to infringe if patents exist claiming the methods, apparatuses or products herein described. No warranty, therefore, is thereby given concerning the existence or non-existence of any patents claiming any pertinent subject matter presented herein. The company assumes no obligation, express or implied, or liability for use of the information and data presented.

SERIES 770
WATER JET SCRUBBERS

Series 770 Water Jet Scrubbers

The Heil Series 770 Water Jet Scrubbers are designed for the removal of soluble gases and particulate matter, and direct-contact condensation. The open design combined with a high liquid flow-rate permits collection of sticky and/or gummy particulate, as well as gas which decomposes upon contact with water, e.g. $SiCl_4$, H_2SiF_6.

A high liquid flow at pressures up to 100 psig directed into the throat of the venturi induces a gas flow into the venturi. Gas/liquid contact occurs in the throat of the venturi where the contaminant gas or particulate matter is scrubbed. Leaving the throat, the gas is allowed to expand in the venturi's diverging section prior to entering the separator tank. Once in separator tank, the gas stream makes several sharp changes in direction, causing entrained water droplets to impinge on the tank wall or the liquid surface. The scrubbed gas then exits the separator and is exhausted to atmosphere. Where extremely high efficiencies are required, water jet scrubbers can be arranged in series.

The standard Series 770 Water Jet Scrubbers are custom designed to meet the specific requirements of each application.

Series 770 Applications

Heil Series 770 Water Jet Scrubbers have been used successfully for control corrosive and/or noxious gases and particulate matter in fertilizer, pulp and paper, pharmaceuticals, and chemical plants.

The design of the Series 770 Water Jet Scrubber makes it the ideal choice for control of exhausts from epitaxial reactors. The scrubber is selected to provide adequate dilution (up to 100:1) of the incoming gas. The high liquid flow deluges the incoming gas, trapping most of the silicon dioxide (a decomposition product of $SiCl_4$) while also absorbing the HCl gas. Two Series 770 Water Jets in series have been tested in excess of 98% efficiency.

Series 770 Features

Principal features of the Series 770 Water Jet Scrubber are:

Low initial cost — The Series 770 Water Jet is capable of inducing gas flows up to 95,000 CFM against static resistances up to 8" W.C. without using a fan. Pre-engineered standard designs are available over the range of capacities.

Low maintenance cost — No moving internal parts to wear. The spray nozzles used to direct the spray to the throat have large orifices to eliminate the potential for plugging. The open design enables the Series 770 Water Jet Scrubber to be highly effective controlling heavy solids loadings, as well as sticky or tacky materials which could clog other scrubbers.

High efficiency — Proper sizing of the unit and selection of irrigation rate, pressure, and chemical addition will result in efficiencies up to 90% for soluble gases for a single Series 770 Water Jet. Particulate collection efficiency can exceed 99%.

Versatile — The Series 770 Water Jet Scrubber can be specified for a wide variety of gas scrubbing applications. In addition they can be operated in series with another Series 770 Water Jet or other type scrubbers, e.g. Series 730 Countercurrent Scrubber, etc., to achieve maximum efficiencies even for the most difficult of applications.

Extended Service Life — Individual units are designed with maximum corrosion resistance as a primary consideration. The wide selection of corrosion resistant materials feature Rigidon FRP (fiberglass reinforced plastic) as a standard material with stainless steel and other alloy construction available.

Series 770 Equipment Selection

The air or gas volume required to ventilate the process is the principal guide in selecting the proper sized scrubber. Where the specific volume of air required is not already known, references such as the Industrial Ventilation Handbook should be consulted.

After determining the total air volume to be scrubbed, the efficiency of the unit must then be selected. The required efficiency will depend upon several factors including type of particulate, size distribution, quantity, concentration, plant environment, local, state and federal codes.

Heil's engineers will then assist in determination of pressure drop, recirculation rate, specific material selection, as well as sizing and specification of accessory items (pumps, recirculation tanks, fans, etc.) to make the system complete. Heil's engineers will then provide a specific quotation on the appropriate scrubber and/or system.

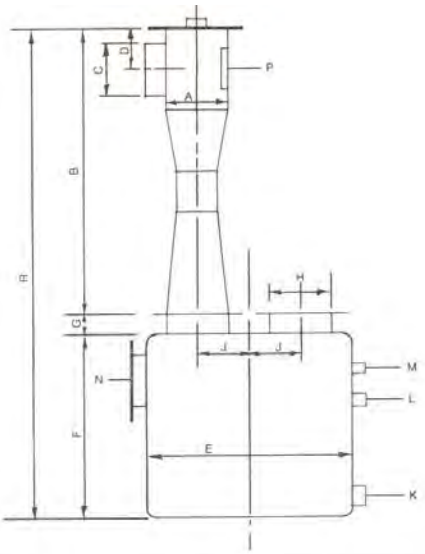

SIZE	A	B	C	D	E	F	G	H	J	K	L	M	N	P	Q	R	OPERATING RANGE-CFM
3	3"	24"	3"	4½"	24"	27"	4"	3"	7½"	1½"	1"	1"	–	–	1"	55"	20-120
6	6	42	6	6	36	36	4	6	12	2	1	1	–	–	1	82	80-480
10	10	54	8	8	42	42	4	8	14	3	1½	1	–	9x9	1½	100	200-1400
12	12	62	10	10	48	48	4	10	16	3	1½	1	18x18	9x9	2	114	250-2000
18	18	101	16	14	60	54	4	16	19	4	3	1½	18x18	9x9	3	159	500-4500
24	24	120	20	18	72	66	4	20	23	6	3	2	18x18	9x9	4	190	1000-8000
30	30	139	24	21	84	69	4	24	27	8	4	3	22	18x18	6	212	2000-12000
36	36	175	30	22	96	90	4	30	27	8	4	3	22	18x18	6	269	2500-17500
48	48	252	42	28	108	120	6	42	27	10	6	4	22	18x18	8	378	5000-35000
60	60	307	54	34	132	144	6	54	33	12	6	4	22	18x18	10	457	7500-45000
72	72	329	60	40	144	162	6	60	36	14	8	4	22	18x18	12	497	10000-70000
84	84	399	72	46	168	162	6	72	42	16	8	6	22	18x18	14	567	13000-95000

NOTES: (1) All dimensions are approximate.
(2) Fittings 6" and smaller - Sch. 80 PVC; 8" and larger FRP flanged.
(3) Rectangular access doors are flush type.
(4) Separator tanks sizes 30 and larger have ASME dished heads.

HEIL PROCESS EQUIPMENT

34250 Mills Rd.
Avon, OH 44011
PH: 440-327-6051
FX: 440-327-7088

Important - The data and information represented herein refers to typical values by the methods or apparatuses indicated and should be so considered. Since processing variables are a major factor in product performance, this information should serve only as a guide. Any information presented herein should not be assumed to be free of patent coverage nor taken as an inducement or encouragement to infringe if patents exist claiming the methods, apparatuses or products herein described. No warranty, therefore, is thereby given concerning the existence or non-existence of any patents claiming any pertinent subject matter presented herein. The company assumes no obligation, express or implied, or liability for use of the information and data presented.

5. SAG MILL PROCESS SCRUBBER

11.0 EQUIPMENT DATA

CONDITION OF SERVICES (Design)

Equipment Tag: 120-DCS-01	Equipment Name: SAG Mill Dust Scrubber
Site Criteria	See Spec. MM-2200-SP-003
Emissions Source	SAG Mill Feeder and Discharge
Required Flow Rate, scfm	2000
Fan Inlet Pressure, in wg	10-15
Feed Stream Constituents	Ore Dust and Crushed Ore Vapor
Acid Gas Concentration, ppm	--
Feed Stream Temperature, F	70
Particulate Size, µm	2 - 40
Particulate Type (dust, precipitate, etc...)	Ore Dust and Crushed Ore Vapor
Particulate Load, ppm	10
Transport Velocity, ft/min	3500
Capture Velocity, ft/min	250
Duty Cycle, hr/day	24

EQUIPMENT DATA SHEET (Seller Supplied Data)

Equipment Tag:120-DCS-01 ; Equipment Name: SAG Mill Dust Scrubber	
Wet Scrubber Data	
Scrubber Type	Variable Throat Venturi Type
Scrubber Material	304 / FRP
Scrubber Dimensions, ft	SIZE 18 SCR DATA SHEET
Packing Media Type (as required)	N/A
Scrubber Pressure Range, in wg	10"
Removal Efficiency, %	99 5 MICRON
Mist Eliminator Data	
Mist Eliminator Type	CHEVRON
Mist Eliminator Material	NORYL
Mist Eliminator Dimensions, ft	2
Water Removal Efficiency, %	99 40 MICRON +
Exhaust Stack Data	
Exhaust Stack Material	CARBON STEEL
Exhaust Stack Dimensions, ft	12" ϕ x 35'
Exhaust Fan Data	
Fan Type	CENT.
Fan Material	CARBON STEEL
Fan Capacity, scfm	2000
Fan Motor Power, HP	15
Fan Discharge	To Atmosphere via Exhaust Stack

THIS DOCUMENT IS THE PROPERTY OF CH2M HILL. ALL RIGHTS RESERVED. THIS DOCUMENT SHALL DISCLOSED TO THIRD PARTIES WITHOUT WRITTEN APPROVAL FROM CH2M HILL.

Equipment Tag:120-DCS-01 ; Equipment Name: SAG Mill Dust Scrubber	
Recirculation Pump Data	
Recirculation Pump Type	Horizontal ANSI Centrifugal
Pump Flow, gpm	250
Pump NPSHR, ft	60
Pump Material	
Pump Dimensions, in	TBD
Pump Power, HP	10
Pump Seal Type	TBD
Pump Seal Material	"
Pump Coupling Type	"
Water Feed System Data	
Water Feed System Type	
Spray Header Material	316L SS
Spray Nozzle Type	
Spray Nozzle Pattern	FULL CONE
Spray Nozzle Material	316L SS
Spray Water Recirc Rate, gpm	250
Water Conditioning System Data	
Water Conditioning Type	N/A
Water Conditioning Chemicals	
Metering Pump Type	
Metering Pump Flow, gpm	
Duct Data	
Duct Material	CARBON STEEL
Duct Dimensions, ft	15
Duct Wall Thickness, inch	TBD
Duct Lining Type	TBD
Structural Data	
Structural Support Type	N/A
Structural Support Material	
Structural Support Dimensions, ft	
Structural Support Coating	

THIS DOCUMENT IS THE PROPERTY OF CH2M HILL. ALL RIGHTS RESERVED. THIS DOCUM
DISCLOSED TO THIRD PARTIES WITHOUT WRITTEN APPROVAL FROM CH2M HILL.

6. LEACH VENT PROCESS SCRUBBER

CONDITION OF SERVICES (Design)

Equipment Tag: 220-GHS-01	Equipment Name: Leach Vent Gas Scrubber
Site Criteria	See Spec. MM-2200-SP-003
Emissions Source	Pre-Leach and Leach Tanks
Required Flow Rate, scfm	2500
Fan Inlet Pressure, in wg	10-15
Feed Stream Constituents	Sulfuric Acid Vapor
Acid Gas Concentration, ppm	10
Feed Stream Temperature, F	200
Particulate Size, µm	< 10
Particulate Type (dust, precipitate, etc…)	Dust
Particulate Load, ppm	<1
Transport Velocity, ft/min	3500
Capture Velocity, ft/min	250
Duty Cycle, hr/day	24

EQUIPMENT DATA SHEET (Seller Supplied Data)

Equipment Tag:220-GHS-01 ; Equipment Name: Leach Vent Gas Scrubber	
Wet Scrubber Data	
Scrubber Type	Variable Throat Venturi Type
Scrubber Material	~~SS~~ FRP
Scrubber Dimensions, ft	SIZE 18 REF. DATA SHT.
Packing Media Type (as required)	N/A
Scrubber Pressure Range, in wg	10"
Removal Efficiency, %	99 5 MICRON +
Mist Eliminator Data	
Mist Eliminator Type	MESH PAD
Mist Eliminator Material	POLYPROPYLENE
Mist Eliminator Dimensions, ft	~~[illegible]~~ 2.5
Water Removal Efficiency, %	99 10 MICRON +
Exhaust Stack Data	
Exhaust Stack Material	CARBON STEEL
Exhaust Stack Dimensions, ft	12"ϕ x 35'
Exhaust Fan Data	
Fan Type	CENT.
Fan Material	CARBON STEEL
Fan Capacity, scfm	2500
Fan Motor Power, HP	~~[illegible]~~ 20
Fan Discharge	To Atmosphere via Exhaust Stack
Recirculation Pump Data	

THIS DOCUMENT IS THE PROPERTY OF CH2M HILL. ALL RIGHTS RESERVED. THIS DOCUMENT SHALL NOT BE DISCLOSED TO THIRD PARTIES WITHOUT WRITTEN APPROVAL FROM CH2M HILL.

Equipment Tag:220-GHS-01 ; Equipment Name: Leach Vent C	
Recirculation Pump Type	**Horizontal ANSI C**
Pump Flow, gpm	250
Pump NPSHR, ft	60
Pump Material	FRP
Pump Dimensions, in	TBD
Pump Power, HP	10
Pump Seal Type	TBD
Pump Seal Material	"
Pump Coupling Type	"
Water Feed System Data	
Water Feed System Type	
Spray Header Material	**316L SS**
Spray Nozzle Type	
Spray Nozzle Pattern	FULL CO
Spray Nozzle Material	**316L SS**
Spray Water Recirc Rate, gpm	250
Water Conditioning System Data	
Water Conditioning Type	N/A
Water Conditioning Chemicals	
Metering Pump Type	
Metering Pump Flow, gpm	
Duct Data	
Duct Material	CARBON ST
Duct Dimensions, ft	15
Duct Wall Thickness, inch	TBD
Duct Lining Type	"
Structural Data	
Structural Support Type	N/A
Structural Support Material	
Structural Support Dimensions, ft	
Structural Support Coating	

THIS DOCUMENT IS THE PROPERTY OF CH2M HILL. ALL RIGHTS RESERVED. T
DISCLOSED TO THIRD PARTIES WITHOUT WRITTEN APPROVAL FROM CH2M HI

7. URANIUM PRECIPITATION PROCESS SCRUBBER

CONDITION OF SERVICES (Design)

Equipment Tag: 530-GHS-01	Equipment Name: Uranium Vent Gas Scrubber
Site Criteria	See Spec. MM-2200-SP-003
Emissions Source	Uranium SX, Uranium Thickener, Uranium Dryer, Vacuum System
Required Flow Rate, scfm	2000
Fan Inlet Pressure, in wg	10-15
Feed Stream Constituents	Water Vapor and Uranium Particulate
Acid Gas Concentration, ppm	--
Feed Stream Temperature, F	225
Particulate Size, µm	2 - 40
Particulate Type (dust, precipitate, etc...)	Uranium Particulate
Particulate Load, ppm	10
Transport Velocity, ft/min	3500
Capture Velocity, ft/min	250
Duty Cycle, hr/day	24

EQUIPMENT DATA SHEET (Seller Supplied Data)

Equipment Tag:530-GHS-01 ; Equipment Name: Uranium Vent Gas Scrubber	
Wet Scrubber Data	
Scrubber Type	Variable Throat Venturi Type
Scrubber Material	304 /FRP
Scrubber Dimensions, ft	SIZE 18 REF. DATA SHT.
Packing Media Type (as required)	N/A
Scrubber Pressure Range, in wg	10"
Removal Efficiency, %	99 5 MICRON
Mist Eliminator Data	
Mist Eliminator Type	CHEVRON
Mist Eliminator Material	NORYL
Mist Eliminator Dimensions, ft	2
Water Removal Efficiency, %	99 40 MICRON +
Exhaust Stack Data	
Exhaust Stack Material	CARBON STEEL
Exhaust Stack Dimensions, ft	12"ϕ x 35'
Exhaust Fan Data	
Fan Type	CENT.
Fan Material	CARBON STEEL
Fan Capacity, scfm	2000
Fan Motor Power, HP	15

THIS DOCUMENT IS THE PROPERTY OF CH2M HILL. ALL RIGHTS RESERVED. THIS DOCUMENT SHALL NOT BE DISCLOSED TO THIRD PARTIES WITHOUT WRITTEN APPROVAL FROM CH2M HILL.

Equipment Tag:530-GHS-01 ; Equipment Name: Uranium Vent Gas Scrubber	
Fan Discharge	**To Atmosphere via Exhaust Stack**
Recirculation Pump Data	
Recirculation Pump Type	**Horizontal ANSI Centrifugal**
Pump Flow, gpm	250
Pump NPSHR, ft	60
Pump Material	
Pump Dimensions, in	TBD
Pump Power, HP	10
Pump Seal Type	TBD
Pump Seal Material	"
Pump Coupling Type	"
Water Feed System Data	
Water Feed System Type	
Spray Header Material	**316L SS**
Spray Nozzle Type	
Spray Nozzle Pattern	FULL CONE
Spray Nozzle Material	**316L SS**
Spray Water Recirc Rate, gpm	250
Water Conditioning System Data	
Water Conditioning Type	N/A
Water Conditioning Chemicals	
Metering Pump Type	
Metering Pump Flow, gpm	
Duct Data	
Duct Material	CARBON STEEL
Duct Dimensions, ft	15
Duct Wall Thickness, inch	TBD
Duct Lining Type	"
Structural Data	
Structural Support Type	N/A
Structural Support Material	
Structural Support Dimensions, ft	
Structural Support Coating	

THIS DOCUMENT IS THE PROPERTY OF CH2M HILL. ALL RIGHTS RESERVED. THIS DOCUMENT SHALL NC
DISCLOSED TO THIRD PARTIES WITHOUT WRITTEN APPROVAL FROM CH2M HILL.

8. VANADIUM PRECIPITATION PROCESS SCRUBBER

CONDITION OF SERVICES (Design)

Equipment Tag: 730-GHS-01	**Equipment Name: Vanadium Vent Gas Scrubber #1**
Site Criteria	**See Spec. MM-2200-SP-003**
Emissions Source	**Vanadium Furnace, Casting Wheel, Rotary Kiln**
Required Flow Rate, scfm	**1000**
Fan Inlet Pressure, in wg	**10-15**
Feed Stream Constituents	**Vanadium Particulate, Ammonia, 5g/L H2SO4**
Acid Gas Concentration, ppm	**--**
Feed Stream Temperature, F	**225**
Particulate Size, µm	**2 – 40**
Particulate Type (dust, precipitate, etc…)	**Vanadium Particulate**
Particulate Load, ppm	**10**
Transport Velocity, ft/min	**3500**
Capture Velocity, ft/min	**250**
Duty Cycle, hr/day	**24**

EQUIPMENT DATA SHEET (Seller Supplied Data)

Equipment Tag:730-GHS-01 ; Equipment Name: Vanadium Vent Gas Scrubber #1	
Wet Scrubber Data	
Scrubber Type	**Seller to Specify** VENTURI AND PACKED TOWER
Scrubber Material	FRP
Scrubber Dimensions, ft	SIZE 16'5"732 REF. DATA SHT
Packing Media Type (as required)	2" HELLEX
Scrubber Pressure Range, in wg	13"
Removal Efficiency, %	99
Mist Eliminator Data	
Mist Eliminator Type	MESH PAD
Mist Eliminator Material	POLYPROPYLENE
Mist Eliminator Dimensions, ft	2
Water Removal Efficiency, %	99 10 MICRON
Exhaust Stack Data	
Exhaust Stack Material	FRP
Exhaust Stack Dimensions, ft	8"ϕ x35'
Exhaust Fan Data	
Fan Type	CENT.
Fan Material	FRP
Fan Capacity, scfm	1000

THIS DOCUMENT IS THE PROPERTY OF CH2M HILL. ALL RIGHTS RESERVED. THIS DOCUMENT SHALL NOT BE DISCLOSED TO THIRD PARTIES WITHOUT WRITTEN APPROVAL FROM CH2M HILL

Equipment Tag:730-GHS-01 ; Equipment Name: Vanadium Vent Gas Scrubber #1	
Fan Motor Power, HP	
Fan Discharge	**To Atmosphere via Exhaust Stack**
Recirculation Pump Data	
Recirculation Pump Type	**Horizontal ANSI Centrifugal**
Pump Flow, gpm	225
Pump NPSHR, ft	60
Pump Material	FRP
Pump Dimensions, in	TBD
Pump Power, HP	10
Pump Seal Type	TBD
Pump Seal Material	"
Pump Coupling Type	"
Water Feed System Data	
Water Feed System Type	
Spray Header Material	**316L SS**
Spray Nozzle Type	
Spray Nozzle Pattern	FULL CONE
Spray Nozzle Material	**316L SS**
Spray Water Recirc Rate, gpm	
Water Conditioning System Data	
Water Conditioning Type	pH
Water Conditioning Chemicals	50 - 20% H_2SO_4
Metering Pump Type	LMI
Metering Pump Flow, gpm	0 - 2GPH
Duct Data	
Duct Material	FRP
Duct Dimensions, ft	15
Duct Wall Thickness, inch	TBD
Duct Lining Type	NONE
Structural Data	
Structural Support Type	N/A
Structural Support Material	
Structural Support Dimensions, ft	
Structural Support Coating	

'HIS DOCUMENT IS THE PROPERTY OF CH2M HILL. ALL RIGHTS RESERVED. THIS DOCUMENT SHALL NOT B
)ISCLOSED TO THIRD PARTIES WITHOUT WRITTEN APPROVAL FROM CH2M HILL.

9. VANADIUM PACKAGING PROCESS SCRUBBER

CONDITION OF SERVICES (Design)

Equipment Tag: 730-GHS-02	Equipment Name: Vanadium Vent Gas Scrubber #2
Site Criteria	See Spec. MM-2200-SP-003
Emissions Source	Vanadium Precipitation and Oxidation Tanks, Vanadium Dryer, and Vanadium Vacuum System
Required Flow Rate, scfm	5000
Fan Inlet Pressure, in wg	10-15
Feed Stream Constituents	Vanadium Particulates
Acid Gas Concentration, ppm	--
Feed Stream Temperature, F	250
Particulate Size, µm	2 – 40
Particulate Type (dust, precipitate, etc…)	Furnace Exhaust Particulate, Vanadium Particulate
Particulate Load, ppm	200
Transport Velocity, ft/min	3500
Capture Velocity, ft/min	250
Duty Cycle, hr/day	24

EQUIPMENT DATA SHEET (Seller Supplied Data)

Equipment Tag:730-GHS-02 ; Equipment Name: Vanadium Vent Gas Scrubber #2	
Wet Scrubber Data	
Scrubber Type	Variable Throat Venturi
Scrubber Material	304/FRP
Scrubber Dimensions, ft	SIZE 24 REF. DATA SHT.
Packing Media Type (as required)	N/A
Scrubber Pressure Range, in wg	10
Removal Efficiency, %	99
Mist Eliminator Data	
Mist Eliminator Type	CHEVRON
Mist Eliminator Material	NORYL
Mist Eliminator Dimensions, ft	3
Water Removal Efficiency, %	99
Exhaust Stack Data	
Exhaust Stack Material	CARBON STEEL
Exhaust Stack Dimensions, ft	16"ϕ x 35'
Exhaust Fan Data	
Fan Type	CENT.
Fan Material	CARBON STEEL

THIS DOCUMENT IS THE PROPERTY OF CH2M HILL. ALL RIGHTS RESERVED. THIS DOCUMENT SHALL NOT BE DISCLOSED TO THIRD PARTIES WITHOUT WRITTEN APPROVAL FROM CH2M HILL

Equipment Tag:730-GHS-02 ; Equipment Name: Vanadium Vent Gas Scrubber #2	
Fan Capacity, scfm	5000
Fan Motor Power, HP	40
Fan Discharge	**To Atmosphere via Exhaust Stack**
Recirculation Pump Data	
Recirculation Pump Type	**Horizontal ANSI Centrifugal**
Pump Flow, gpm	350
Pump NPSHR, ft	60
Pump Material	
Pump Dimensions, in	TBD
Pump Power, HP	10
Pump Seal Type	TBD
Pump Seal Material	"
Pump Coupling Type	"
Water Feed System Data	
Water Feed System Type	
Spray Header Material	**316L SS**
Spray Nozzle Type	
Spray Nozzle Pattern	FULL CONE
Spray Nozzle Material	**316L SS**
Spray Water Recirc Rate, gpm	
Water Conditioning System Data	
Water Conditioning Type	N/A
Water Conditioning Chemicals	
Metering Pump Type	
Metering Pump Flow, gpm	
Duct Data	
Duct Material	CARBON STEEL
Duct Dimensions, ft	15
Duct Wall Thickness, inch	TBD
Duct Lining Type	"
Structural Data	
Structural Support Type	N/A
Structural Support Material	
Structural Support Dimensions, ft	
Structural Support Coating	

THIS DOCUMENT IS THE PROPERTY OF CH2M HILL. ALL RIGHTS RESERVED. THIS DOCUMENT SHALL NO
DISCLOSED TO THIRD PARTIES WITHOUT WRITTEN APPROVAL FROM CH2M HILL.

10. UDEQ MEMO FROM REGG OLSON

State of Utah

Department of
Environmental Quality

Richard W. Sprott
Executive Director

DIVISION OF AIR QUALITY
Cheryl Heying
Director

JON M. HUNTSMAN, JR.
Governor

GARY HERBERT
Lieutenant Governor

MEMORANDUM

TO: **Permitting Branch**

FROM: **Regg Olsen**

DATE: **March 10, 2008**

SUBJECT: Emission Factors for Paved and Unpaved Haul Roads

---

1. The question of how to deal with the emission factors for paved and unpaved haul roads has risen when using AP-42 emission factors. Using current AP-42 emission factors shows higher emission rates for paved roads than unpaved roads. This does not seem practical; we also want to encourage sources to pave roads when appropriate, not remove paved haul roads to get lower calculated emissions!

2. With these problems, sources have taken the task upon themselves to search out the best solution which at times has developed additional problems as they try to document and we try to validate their approach. We have also been concerned with consistency across industry. This memo is intended to provide some assistance on the issue for permit engineers and sources alike. Every Approval Order is a case-by-case determination and site specific with conditions unique to the site; implementation of this document will be likewise.

3. Beginning with the date of this memo, permit engineers should allow applicants to use the recommended equation found in AP-42 13.2.2 for Unpaved Haul Roads and add the appropriate control efficiencies outlined below to that equation. Due to the flexibility this approach provides, the UDAQ will strictly adhere to the outlined control efficiencies. A source can still choose to use the AP-42 equation for Paved Haul Roads found in AP-42, 13.2.1 if they choose, but the approach outlined in this memo can serve as an alternative.

4. The equation for unpaved haul roads is found in AP-42 13.2.2 and is:

$$E = k\,(s/12)^a (W/3)^b$$

where,
k, a and b are empirical constants found in AP-42
E = size-specific emission factor (lb/VMT)
s = surface material silt content (%)
W = mean vehicle weight (tons)

The "s" factor above, the surface material silt content should be determined for each site for Option 1 and 2 below. For Options 3, 4, and 5, due to the nature of the control, the default value of 4.8% shall be used.

5. Control Options

Control	Control Efficiency (%)
Basic Watering	70
Basic Watering and Road Base	75
Chemical Suppressant and Watering	85
Pave Road Surface with Sweeping and Watering	90
Pave Road with Vacuum Sweeping and Watering	95

OPTION 1. Basic Watering, 70% -

This option is performed with natural soil in place and applying water, when warranted to obtain and never exceed a 20% opacity limit at the densest point of the plume behind the vehicle.

OPTION 2. Basic Watering and Road Base, 75% -

Cover unpaved roads with low silt content material (i.e., recycled asphalt, recycled concrete, recycled road base, or gravel to a minimum depth of four inches) and watering occurs as needed to adhere to a 20% opacity limit at the densest point of the plume behind the vehicle.

OPTION 3. Chemical Suppressant and Watering, 85% -

In AP-42, Section 13.2.2 Unpaved Roads on page 13.2.2-13 it states:

The control effectiveness of chemical dust suppressants appears to depend on (a) the dilution rate used in the mixture; (b) the application rate (volume of solution per unit road surface area); (c) the time between applications; (d) the size, speed and amount of traffic during the period between applications; and (e) meteorological conditions (rainfall, freeze/thaw cycles, etc.) during the period. Other factors that affect the performance of dust suppressants include other traffic characteristics (e. g., cornering, track-on from unpaved areas, etc.) and road characteristics (e. g., bearing strength, grade, etc.). The variables in

the above factors and differences between individual dust control products make the control efficiencies of chemical dust suppressants difficult to estimate. Past field testing of emissions from controlled unpaved roads has shown that chemical dust suppressants provide a PM-10 control efficiency of about 80 percent when applied at regular intervals of 2 weeks to 1 month.

This paragraph states that chemical suppression can obtain 80% control efficiency. By adding water as needed, we can add an additional 5% control, bringing the total control efficiency to 85%.

OPTION 4. Pave Road Surface with Sweeping and Watering, 90% -

Paving of the road surface would involve applying a surface of asphalt or concrete in order to make a relatively flat surface that can easily be swept and flushed with water. This option would involve having a sweeper on site and sweeping of the road surface followed by a water flush.

OPTION 5. Pave Road with Vacuum Sweeping and Watering, 95% -

Paving of the road surface would involve applying a surface of asphalt or concrete in order to make a relatively flat surface that can easily be swept, vacuumed, and flushed with water. This option would involve having a vacuum sweeper on site that would travel each paved road surface followed by a water truck to flush the surface.

6. The greatest variable in applying these controls is the frequencies of watering, sweeping, and/or vacuuming. Factors such as the number of vehicles passing across different segments of road and seasonal conditions, such as evaporation rate, precipitation and temperature can dictate when a surface is or is not controlled. The frequencies of watering, vacuuming, and sweeping will be on a case by case basis as conditions warrant and based on the location of the source (attainment area vs. non-attainment area, etc).

7. These factors and the controls associated with them are established as a minimum requirement. Along with the controls stated above, additional site specific controls could be required. For example, due to the size and location a source, they could be required to add a cattle guard or rumble strips in between the sections of unpaved and paved roads to minimize track out. Installing road base on the shoulders of paved road could also be added to control track out onto the paved haul road sections.

8. In addition to each of the factors and controls above, a 15 mph speed limit should also be required on all haul roads at the facility.

9. Questions concerning this memo should be directed to either your Section or Branch Manager.

cc: Air Standards Branch
Technical Analysis Section (Inventory)

11. ROADWAY DESIGN RECOMMENDATIONS REPORT

KLEINFELDER
Bright People. Right Solutions.

611 Corporate Circle, Suite C
Golden, CO
80401

p| 303.237.6601
f | 303.237.6602

kleinfelder.com

October 30, 2008
File 89241-6

Ms. Kimberly Finke-Morrison
Golder Associates, Inc.
44 Union Boulevard, Suite 300
Lakewood, Colorado 80228

Subject: Roadway Pavement Design Recommendations
Piñon Ridge Project
Montrose County, Colorado

Dear Ms. Morrison:

This report presents recommendations for roadway design at the Piñon Ridge Project located in Montrose County, Colorado. A site vicinity map is provided on Figure A-1 in Appendix A. Kleinfelder's work was performed as part of the Phase 2 Geotechnical Investigation and consisted of subsurface exploration, laboratory testing, design team meetings, engineering analyses, and preparation of this report.

PROJECT DESCRIPTION

This design report includes recommendations for the main access drive into the facility, which includes the haul road to the ore pad and access to the mill facility. The design also includes the administration building access drives and parking, employee parking at the mill, and secondary roads to monitoring stations and the project perimeter. The main roadways will be gravel surfaced while the secondary roads will be two-track dirt roads. The main roadways will be one-lane in each direction with a roadway width of 22 feet. In addition a 2-foot shoulder will be constructed on each edge. The deceleration lane off State Highway 90 into the site and the initial approximately 150 feet of the entry road to the project boundary will be asphalt surfaced and designed by a separate consultant.

American Association of State Highway and Transportation Officials (AASHTO) and United States Department of the Interior (DOI) design procedures were followed for roadway design. The Colorado Department of Transportation (CDOT) Design Manual was also consulted.

Copyright 2008 Kleinfelder

SUBGRADE MATERIAL

The subgrade materials were evaluated by reviewing data from the following sources:

- Geotechnical Design Recommendations, Mill and Infrastructure, Piñon Ridge Project, Montrose County, Colorado, report by Kleinfelder West, Inc., dated October 15, 2008.
- Phase 2 Geotechnical Field and Laboratory Program report by Golder Associates Inc., dated September 2008.
- Subsurface information obtained from Phase I Baseline Characterization Investigation, conducted by Kleinfelder West, Inc. as part of the permit application.

The borings and tests pits from the referenced data that were used in the roadway design are shown at the approximate locations indicated on the Borings and Test Pits Roadway Pavement Design (Figure A-2). The subgrade soils identified from these borings and test pits consisted mainly of wind blown loess comprised of silty and clayey sand to sandy clay and silt. Boring logs from the referenced investigations are attached in Appendix B.

Soil standard property testing performed on samples of the subgrade materials indicated an AASHTO classification of A-2-4, A-2-6, A-4 and A-6 with a group index of 0 to 3. The subgrade materials were classified primarily as A-4 and A-2-4 depending upon the amount of silt/clay fines. Test results not provided in the referenced reports are presented in Appendix C and Table C-1 at the front of the appendix summarizes test data from all borings used in the analysis. These soils are considered fair to good subgrade material by AASHTO. The distribution of AASHTO classification is presented in the following table.

AASHTO CLASSIFICATION	PERCENTAGE OF SUBGRADE
A-4	50
A-2-4	44
A-2-6	3
A-6	3

Hveem Stabilometer R-value testing performed on samples of the A-4 and A-6 subgrade soils measured R-values of 28 and 14, respectively, reference Figures C.1 and C.2. An R-value of 14 was used for roadway design. For design purposes, this R-

Copyright 2008 Kleinfelder

value was converted to a California Bearing Ratio (CBR) of 2.7 by using correlation equations to a resilient modulus of 4,060 pounds per square inch (psi) calculated from the R-value.

CONCLUSIONS AND RECOMMENDATIONS

A roadway section is a layered system designed to distribute concentrated traffic loads to the subgrade. Performance of the roadway structure is directly related to the physical properties of the subgrade soils and traffic loadings. Soils are represented for design purposes by means of a soil support value, which is empirically related to strength.

Design Traffic:

Daily traffic for the mill site was provided by the client. Typical daily traffic is expected to consist of 42 haul trucks using the main haul road and ore pad roads, 2 chemical tanker trucks or large delivery trucks using the main haul road and access roadways to the mill, and 88 passenger cars and 4 light delivery trucks accessing both the administration building and mill area. Maximum weight for the haul trucks is expected to be around 40 tons. Trucks will be both end dump and side dump vehicles legal for state highways. A maximum wheel load of approximately 4,500 pounds was determined from the traffic data.

Ore will be hauled to the site and stockpiled during mill construction, but will consist of about 12 trucks per day. Approximately 30 construction vehicles are estimated per day during construction. Assuming construction vehicles will be similar in weight to the haul trucks, Kleinfelder believe traffic during construction will be similar to operational traffic.

Design Sections:

The DOI Design of Mine Haulage Roads - A Manual, 1977 was used to design the main access road and ore pad haulage roads. The DOI manual uses a maximum wheel load and CBR value to obtain aggregate roadway thickness. Using a CBR value of 2.7 for the subgrade soils and a maximum wheel load of 5,400 pounds (increased 20 percent per DOI procedures), a 17-inch aggregate roadway section was determined using Figure 18 from the DOI manual. The recommended aggregate section should consist of a 5-inch surface course of CDOT Class 6 aggregate base course over 12 inches of CDOT Class 1 aggregate base course. The DOI roadway thickness design chart and supporting calculations are attached in Appendix D.

Copyright 2008 Kleinfelder

AASHTO low-volume road design procedures were used for thickness design of mill roadway and drive areas that will by used by passenger cars and small trucks along with occasional chemical and delivery trucks, but will not be used by heavy mine haul trucks. Traffic loadings for these roadways were calculated using the above traffic mix and were converted to an 18-kip equivalent single axle load (ESAL) value of 40,000 using a 20-year design life. Pavement damage was computed using the AASHTO trial aggregate base thickness procedure and serviceability loss and rutting depth criteria of 2.5 and 2.0 inches, respectively.

Rutting controlled the design and an aggregate roadway total section of 14.5 inches was calculated. We recommend the design section consist of 5 inches CDOT Class 6 aggregate base course over 9.5 inches of CDOT Class 1 aggregate base course. Kleinfelder recommends the aggregate section for parking areas total 12 inches comprised of 4 inches of CDOT Class 6 base course over 8 inches of CDOT Class 1 base course. Calculations are presented in Appendix D. A summary of the recommended aggregate roadway design sections is presented in the following table.

AGGREGATE ROADWAY DESIGN SECTIONS

Roadway Type	CDOT Class 6 Aggregate Base Course (in.)	CDOT Class 1 Aggregate Base Course (in.)	Total Section Thickness (in.)
Main Access Road / Ore Pad Haulage Road	5.0	12.0	17.0
Mill Roadway / Administration Access Drive	5.0	9.5	14.5
Mill/Administration Parking Areas	4.0	8.0	12.0
Roadway Shoulders	5.0	-	5.0

Copyright 2008 Kleinfelder

Aggregate Materials:

Aggregate base course should conform to CDOT Standard Specifications for Road and Bridge Construction, latest edition. Class 6 and Class 1 aggregate base course should meet the requirements of Section 703.03 and design and construction should meet the requirements of Section 304. The gradation requirement for Class 6 should be modified for the percentage of material passing the No. 200 sieve to a range of 6 to 12 percent rather than the 3 to 12 percent passing specified by CDOT. This modification requires slightly more fines and provides more binder for a gravel-surfaced roadway.

Subgrade Preparation:

Prior to placing the pavement section, the subgrade should be scarified to a depth of 8 inches, adjusted to a moisture content within 2 percent of optimum moisture content and compacted to 95 percent of the maximum standard Proctor density as determined by ASTM Method D698.

The completed pavement subgrade should be proofrolled with a heavily loaded pneumatic-tired vehicle after preparation. Pavement design procedures assume a stable subgrade. Areas that deform under heavy wheel loads are not stable and should be removed and replaced to achieve a stable subgrade prior to paving.

Maintenance:

Periodic maintenance of aggregate roadways will extend roadway life. Blading of all roadways should be performed at least twice a year. As the roadway deteriorates over time fresh aggregate base course will have to be added to the surface. Estimated aggregate loss based on AASHTO procedures and the average daily traffic is approximately 2 inches per year.

LIMITATIONS

This report has been prepared in accordance with generally accepted geotechnical engineering principles and practices in this area at this time. Kleinfelder makes no warranty either express or implied. The conclusions and recommendations submitted in this report are based upon the data obtained from the borings drilled at the locations shown on Figure A-2 and Kleinfelder site observations.

Copyright 2008 Kleinfelder

This report has been prepared for the exclusive use of Golder Associates, Inc. and Energy Fuels Resources for pavement thickness design purposes. Kleinfelder is not responsible for technical interpretations by others of our exploratory information that has not been described or documented in this report. As the project evolves, Kleinfelder should be retained to provide continued consultation and field services to review and monitor the implementation of our recommendations and to verify that the recommendations have been appropriately interpreted. Observation and testing of pavement materials and construction should be in accordance with the project Technical Specifications.

Please feel free to contact us if you have any questions or need additional information.

Respectfully submitted,

KLEINFELDER WEST, INC.

David H. Adams, P.E.
Senior Professional

Adam D. Tschida, P.E.
Geotechnical Manager

DHA:ADT:jw

Cc: Energy Fuels Resources

Enclosures: Appendix A – Vicinity Map, Location of Borings and Test Pits for Roadway Pavement Design
Appendix B – Logs of Pavement Borings and Pits
Appendix C – Laboratory Test Results
Appendix D – Roadway Thickness Calculations and Design Charts

Copyright 2008 Kleinfelder

12. MILDOS-AREA REPORT (PARTIAL)

DRAFT

MILDOS-AREA ASSESSMENT OF OFF-SITE RADIATION DOSES

Rev. B Date: 06/02/09

IN SUPPORT OF THE APPLICATION FOR LICENSE FOR SOURCE MATERIAL MILLING

PIÑON RIDGE URANIUM MILL
Montrose County, Colorado

Submitted to:

Radiation Management Unit
Colorado Department of Public Health and Environment

Prepared for:

ENERGY FUELS RESOURCES
44 Union Blvd., Suite 600
Lakewood, Colorado 80228

Prepared by:

Kleinfelder
8300 Jefferson NE, Suite B
Albuquerque, NM 87111

Project No. 83088
DCN 83088.5M-ALB08RP001

DRAFT

MILDOS-AREA ASSESSMENT OF OFF-SITE RADIATION DOSES

Rev. B

IN SUPPORT OF THE APPLICATION FOR A
LICENSE FOR SOURCE MATERIAL MILLING FOR THE

PIÑON RIDGE URANIUM MILL
Montrose County, Colorado

Submitted to:

Radiation Management Unit
Colorado Department of Public Health and Environment

Prepared for: Energy Fuels Resources
Lakewood, Colorado

Prepared by: Kleinfelder
Albuquerque, New Mexico

Author: _____
Noel Savignac, Ph.D.

Approved: _____
Alan K. Kuhn, PE, PG, CEG
Project Manager

Project No. 83088
DCN 83088.5M-ALB08RP001
Date: 06/02/09

Copyright 2009, Kleinfelder

TABLE OF CONTENTS

SECTION		PAGE
1.0	INTRODUCTION	1
	1.1 Site Location	1
2.0	Purpose and Scope	1
3.0	Methods	2
	3.1 MILDOS-AREA Computer Code	2
	3.2 MILDOS-AREA Source Terms	2
	3.3 Tailings Emissions	2
	3.4 Ore Hauling and Storage	3
	3.5 Ore Crushing and Grinding	3
	3.6 Dispersed Ore and Tailings	3
	3.7 Population Distribution	4
	3.8 Receptors	4
	3.9 Time Steps	4
	3.10 Food Pathway Parameter	4
	3.11 Weather	5
4.0	Results	5
	4.1 MILDOS-AREA Determination of Off-Site Radiation Doses	5
5.0	Conclusions	7
6.0	References	8

TABLES

Table 1	Average Agricultural Production for Colorado	5
Table 2	Anticipated Off-Site Radiation Doses from the Piñon Ridge Uranium Mill Radiation Dose in mrem/yr	6
Table 3	Population Doses	7

APPENDICES

M1 MILDOS-AREA Report PRtails.rad - Off Site Radiation Doses from Piñon Ridge Tailings.

M2 MILDOS-AREA Report PRore.rad - Off Site Radiation Doses from Piñon Ridge ore.

M3 MILDOS-AREA Report PRC+G.rad - Off Site Radiation Doses from Piñon Ridge Crushing and Grinding.

M4 MILDOS-AREA Report PRdisore.rad - Off Site Radiation Doses from Piñon Ridge Dispersed Ore and Tailings Around Mill Site.

Copyright 2009, Kleinfelder

1.0 INTRODUCTION

Energy Fuels Resources Corporation (EFR) proposes to license, construct, and operate a conventional acid leach uranium and vanadium mill at the Piñon Ridge Mill site (the "Site") in western Montrose County, Colorado. Site facilities will include an administration building, a 17-acre mill, tailing ponds totaling 90 acres, an 80-acre evaporation pond, a 5-acre ore storage pad, and an access road. The mill will process ore produced from mines within a reasonable truck-hauling distance. The mill will process up to 500 tons of ore per day but is designed to accommodate subsequent expanded production capacity of up to 1,000 tons per day. The expected operating life of the mill is 20 to 40 years.

The Piñon Ridge Mill is subject to regulation by the State of Colorado, and the mill license (Radioactive Source Material License) will be issued and administered by the Colorado Department of Public Health and Environment (CDPHE). The activities described in this document were performed as part of the baseline characterization required for the Environmental Report (ER) in accordance with Section 3.8.8, Part 3, 6 CCR 1007-1 (CDPHE, 2001). This report presents the results of the MILDOS-AREA evaluation of off-site radiation doses conducted by Noel Savignac Consultants for Kleinfelder for EFR in support of the license application for milling up to 500 tons of ore per day.

1.1 Site Location

The proposed Piñon Ridge Mill (Site) is located in the Paradox Valley at 16910 Highway 90, approximately 14 miles west of Naturita, in Montrose County, Colorado. The Site's legal description is the Southwest ¼ of the Southeast ¼ of Section 5, all of Section 8, the North ¼ of Section 17, and the Southeast ¼ of the Northwest ¼ of Section 17, Township 46 North, Range 17 West, of the New Mexico Principal Base and Meridian. The Site is located on both the Davis Mesa Quadrangle and Bull Canyon Quadrangle 1:24,000 United States Geological Survey (USGS) topographic/geologic maps. The Site location with respect to major topographic features is shown in Figure 1.

2.0 PURPOSE AND SCOPE

The radiation doses are determined from airborne releases from the mill site. Releases of radioactive material from the mill to surface water and groundwater are not anticipated and were not addressed in this study. The computer code MILDOS-AREA was used to calculate radiation doses because the computational methods have been used successfully to calculated radiation doses since 1984 when the code was modified to include large area sources (Strenge and Bander, 1984). CDPHE and the Nuclear Regulatory Commission require the use of the code. The proposed Piñon Ridge Mill design data and the effluent data from the NUREG-0706, Final Generic Impact Statement on Uranium Milling, were entered into MILDOS-AREA to calculate off-site radiation doses because effluent data is not available for a mill that has not been constructed.

The regulations require that the radiation doses determined using MILDOS-AREA be less than the 100 mrem/year for the mill's airborne emissions to be in compliance with CCR 1007-1, 4.14. The radiation doses presented in this study are to the nearest tenth of a mrem (x.x) for comparison with the 100 mrem/yr radiation limit. Population doses are presented to the nearest thousandth of a person-rem (x.xxx) so that a difference in source terms can be observed.

Copyright 2009, Kleinfelder

3.0 METHODS

3.1 MILDOS-AREA Computer Code

The MILDOS-AREA Computer code was used to calculate the off-site radiation doses within an 80 km radius of the Piñon Ridge Uranium Mill. The computer code was developed by Argonne National Laboratories for the Nuclear Regulatory Commission staff to perform routine radiological impact and compliance evaluation for new uranium mills. The code uses a sector-averaged Gaussian plume dispersion model to calculate the transport of radiological emissions from point sources and different area sources. Mechanisms such as radioactive decay, plume depletion by deposition, ingrowth of daughter products, and resuspension of deposited radionuclides are included in the transport model. The pathways considered are: inhalation, external exposure from ground shine, and cloud immersion; and ingestion of vegetables, meat. and milk. Only airborne releases of radioactive materials are considered; releases to surface water and to groundwater are not addressed in MILDOS-AREA. The latest version of MILDOS-AREA (1998) was used to calculate off-site radiation dose from operation of the Piñon Ridge Uranium Mill.

3.2 MILDOS-AREA Source Terms

Major sources of radioactive effluents from the Piñon Ridge Uranium Mill are gaseous and particulate emissions into the air. Both types of emissions originate from the tailings in the tailings cells, ore hauling and stockpiles, ore crushing and grinding in the mill, and dispersed ore and/or tailings around the mill and tailings area. Emissions of yellowcake from the mill are negligible due to the use of a vacuum dryer to dry the yellowcake prior to barreling for shipment offsite. The Final Generic Environmental Impact Statement on Uranium Milling (NUREG-0706) quantifies the emissions from a mill that processes ore containing 226 pCi/gram Ra-226. Since the Piñon Ridge Mill will be handling ore containing an estimated average of 390 pCi/gram Ra-226, all the emissions quantified in NUREG-0706 were increased by the ratio of the activities, 390/226 or a factor of 1.7. The size of the tailings cells and the ore stockpile were entered into MILDOS-AREA directly without being scaled. Assumed emissions from the Piñon Ridge Uranium Mill for entry into MILDOS-AREA are provided below.

3.3 Tailings Emissions

NUREG-0706 Tailings Emissions Volume 1, page 5.8:

U-238 and U-234	(8.7 mCi/yr)(1.7)(E-3 Ci/mCi)	= 0.015 Ci/yr
Th-230	(120 mCi/yr)(1.7)(E-3 Ci/mCi)	= 0.204 Ci/yr
Ra-226	(120 mCi/yr)(1.7)(E-3 Ci/mCi)	= 0.204 Ci/yr
Pb-210 (at equilibrium)	(120 mCi/yr)(1.7)(E-3 Ci/mCi)	= 0.204 Ci/yr

Rn-222 (NUREG-0706, p. 5.8, footnote b) (70 Ci/yr)(1.7) = 119 Ci/yr

Tailings area - Although the EFR tailings cell design shows three, 30-acre cells, NESHAP regulations in 40CFR61 limit tailings area to two, 40-acre tailings cells.

$$2(40 \text{ acres})(\text{km}^2/247.1 \text{ acre}) = 0.24 \text{ km}^2$$

Location relative to yellowcake dryer - 0.5 km North, 0.0 km East

Copyright 2009, Kleinfelder

3.4 Ore Hauling and Storage

NUREG-0706 Tailings Emissions Volume 1, page 5.8:

U-238 and U-234	(0.67 mCi/yr)(1.7)(E-3 Ci/mCi)	= 0.001 Ci/yr
Th-230	(0.67 mCi/yr)(1.7)(E-3 Ci/mCi)	= 0.001 Ci/yr
Ra-226	(0.67 mCi/yr)(1.7)(E-3 Ci/mCi)	= 0.001 Ci/yr
Pb-210 (at equilibrium)	(0.67 mCi/yr)(1.7)(E-3 Ci/mCi)	= 0.001 Ci/yr

Rn-222 (NUREG-0706, p. 5.8, footnote b) (34 Ci/yr)(1.7)(0.2) = 11.6 Ci/yr
(0.2 from NUREG-0706, p. G4 is the fraction of Rn-222 released)

Ore pile (5 acres)(km^2/247.1 acre) = 0.02 km^2

Location relative to yellowcake dryer - 0.0 km North, 0.3 km East

3.5 Ore Crushing and Grinding

NUREG-0706 Tailings Emissions Volume 1, page 5.8:

U-238 and U-234	(0.67 mCi/yr)(1.7)(E-3 Ci/mCi)	= 0.001 Ci/yr
Th-230	(0.67 mCi/yr)(1.7)(E-3 Ci/mCi)	= 0.001 Ci/yr
Ra-226	(0.67 mCi/yr)(1.7)(E-3 Ci/mCi)	= 0.001 Ci/yr
Pb-210 (at equilibrium)	(0.67 mCi/yr)(1.7)(E-3 Ci/mCi)	= 0.001 Ci/yr

Rn-222 (NUREG-0706, p. 5.8, footnote b) (34 Ci/yr)(1.7)(0.2) = 11.6 Ci/yr
(0.2 from NUREG-0706, p. G4 is the fraction of Rn-222 released)

Area (17 acres)(km^2/247.1 acres) = 0.07 km^2

Location relative to yellowcake dryer - 0.0 km North, 0.0 km East

3.6 Dispersed Ore and Tailings

NUREG-0706 Tailings Emissions Volume 1, page 5.8:

U-238 and U-234	Negligible
Th-230	Negligible
Ra-226	Negligible
Pb-210	Negligible
Rn-222 (footnote b)	(48 Ci/yr)(1.7)(0.2) = 16. Ci/yr

(0.2 from NUREG-0706, p. G4 as fraction of Rn-222 released)

Area (30 acres) (km^2/247.1 acre) = 0.12 km^2

Location relative to yellowcake dryer - 0.0 km North, 0.0 km East

Copyright 2009, Kleinfelder

3.7 Population Distribution

The population distribution within the 80 km radius of the mill is the average 2006 population (http://en.wikipedia.org) in each segment of an 80 km radius circle from the Site. Circular segments were formed by concentric circles 5 km to 80 km in 10 km increments from the Site bisected by the 16 compass directions in the circle. The population in each segment was the product of the area of each segment multiplied by the county population density, plus the population of any of the 12 largest cities or towns that occur in that segment. For circles less than five km, one person was designated for each segment.

3.8 Receptors

Receptors are defined as locations within 80 km radius of the Site where radiation doses are calculated by MILDOS-AREA, plus the location of Telluride. These include:

- The nearest residences, Cooper and Carver
- The North, East, South, and West EFR property boundary fences
- The EFR office building
- Bedrock, CO
- Delta, CO
- Dove Creek, CO
- La Sal, UT
- Moab, UT
- Monticello, UT
- Montrose, CO
- Naturita, CO
- Norwood, CO
- Nucla, CO
- Paradox, CO
- Pleasant View, CO
- Redvale, CO
- Slick Rock, CO
- Telluride, CO

Not all cities and towns with the 80 km radius circle from the site were selected as receptors. The list of receptors selected consisted of larger cities and smaller cities or towns distant from one another yet representative of areas within the 80 km radius.

3.9 Time Steps

The population within the 80 km radius circle from the Site and the radionuclide concentrations from the sources were assumed to be constant for five years from 2008.

3.10 Food Pathway Parameter

Default values of 0.5 were used for the "Fraction of Total Annual Livestock Feed Requirements." The food production rates were obtained from Regulatory Guide 3.51, "Calculational Models for Estimating Radiation Doses to Man from Airborne Radioactive Materials Resulting from Uranium Milling Operations," page 35, and are presented in Table 1.

Copyright 2009, Kleinfelder

Table 1
Average Agricultural Production for Colorado

Colorado Average Productivity	kg/yr per km^2
Vegetables	2800
Meat	3200
Milk	1400

3.11 Weather

Weather data were obtained from the 30-meter meteorological tower on-site for the time period April 2008 to March 2009. The wind frequencies by stability class, by compass direction, and by wind speed category were converted to the STAR format for use in MILDOS-AREA. The dominant wind direction was 12.9% from the WNW.

4.0 RESULTS

4.1 MILDOS-AREA Determination of Off-Site Radiation Doses

The off-site radiation doses are presented in Table 2 and are summarized below.

- Estimated radiation doses at the nearest residences to the Site were 0.2 mrem/yr at the Cooper residence and 0.1 mrem/yr at the Carver residence.
- The highest fence-line radiation dose was 3.6 mrem/yr at the East Fence boundary of the Site. However, no one lives or works at that location.
- The radiation dose at the EFR office building was 2.7 mrem/yr.
- All communities within an 80 km radius circle of the Site plus Telluride had projected radiation doses less than 0.1 mrem/yr.

Table 2 also demonstrates that the tailings in the impoundment area produce the greatest off-site radiation dose from the Site. The ore stockpile and ore handling, the crushing and grinding or ore in the mill, and the ore and/or tailings that are usually dispersed around the mill mainly as windblown material are all minor sources of radiation dose to people living and working around the Site.

Table 2
Anticipated Off-Site Radiation Doses from the Piñon Ridge Uranium Mill
Radiation Dose in mrem/yr

Location	Tailings	Ore	Crush and Grind	Dispersed Tailings	Total
Cooper Residence	0.2	<0.1	<0.1	<0.1	0.2
Carver Residence	0.1	<0.1	<0.1	<0.1	0.1
Office Building	2.4	<0.1	0.1	0.2	2.7
North Fence	1.2	<0.1	<0.1	0.1	1.3
East Fence	2.9	0.2	0.2	0.3	3.6
South Fence	0.4	<0.1	0.2	0.2	0.8
West Fence	1.0	<0.1	<0.1	0.2	1.2
Bedrock, CO	TDB				
Delta, CO	<0.1	<0.1	<0.1	<0.1	<0.1
Dove Creek, CO	<0.1	<0.1	<0.1	<0.1	<0.1
La Sal, UT	TBD				
Moab, UT	<0.1	<0.1	<0.1	<0.1	<0.1
Monticello, UT	<0.1	<0.1	<0.1	<0.1	<0.1
Montrose, CO	<0.1	<0.1	<0.1	<0.1	<0.1
Naturita, CO	<0.1	<0.1	<0.1	<0.1	<0.1
Norwood, CO	TBD				
Nucla, CO	<0.1	<0.1	<0.1	<0.1	<0.1
Paradox, CO	TBD				
Pleasant View, CO	<0.1	<0.1	<0.1	<0.1	<0.1
Red Vale, CO	<0.1	<0.1	<0.1	<0.1	<0.1
Slick Rock, CO	<0.1	<0.1	<0.1	<0.1	<0.1
Telluride, CO	<0.1	<0.1	<0.1	<0.1	<0.1

Population doses within 80 km radius of the site and beyond 80 km radius from the Site are shown in Table 3. Population doses can be used to assess the radiological impact on people living in the vicinity of one uranium mill compared to the impact of people living in the vicinity of another uranium mill.

Table 3
Population Doses

Source	Person-rem Within 80 km Radius	Person-rem Beyond 80 km Radius
Tailings	0.408	0.307
Ore Pile and Handling	0.018	0.000
Crushing and Grinding	0.003	0.000
Dispersed Ore and Tailings	0.025	0.000
TOTAL	0.454	0.307

Each off-site radiation dose projected by MILDOS-AREA can be compared to the 100 mrem/yr dose limit for individual members of the public including radon and its progeny but excluding natural background radiation (Colorado Radiation Control regulations in 6 CCR 1007-1-4.14). At none of the locations within the 80 km radius did the dose exceed the 100 mrem/yr limit. The maximum dose was calculated to occur at the EFR's East Fence boundary where no one lives. That dose was 3.6 mrem, which is 3.6% of the maximum allowable dose. The maximum radiation dose at the nearest residence was 0.2 mrem/yr. The maximum dose at towns or cities within the 80 km radius was less than 0.1 mrem/yr. The doses presented in Table 2 can be compared to an average estimate of 365 mrem/yr per U.S. citizen from naturally occurring radiation in the environment and 3 mrem from a typical cross-country airline flight.

5.0 CONCLUSIONS

The MILDOS-AREA modeling of off-site radiation dose from the Piñon Ridge Uranium Mill effluents indicates that the mill will have a minimal radiological impact within 80 km radius of the mill. The maximum dose of 3.6 mrem/yr occurs at the East Fence property boundary, which is equivalent to 3.6% of the maximum allowable dose of 100 mrem/yr. At the nearest residences, the Cooper and Carver residences, the dose is considerably smaller at 0.2 and 0.1 mrem/yr, respectively. For the cities and towns in the general area, the dose is estimated to be less than 0.1 mrem/yr. Based on an assessment of the radiological impact from the Piñon Ridge Uranium Mill on people living in the general area of the mill, the mill is well suited for the site selected.

6.0 REFERENCES

Colorado Department of Public Health and Environment, 2001, 6 CCR 1007-1, Part 18, State Board of Health Licensing Requirements for Uranium and Thorium Processing: Hazardous Materials and Waste Management Division, Radiation Control, Effective November 30, 2001.

Environmental Protection Agency, 1993, "Data Quality Objectives Process for Superfund: Interim Final Guidance," EPA/540/G-93/071, in Brent Pulsipher, Statistical Sciences, Pacific Northwest National Laboratory (http://dqo.pnl.gov/background.htm).

Nuclear Regulatory Commission, 1980, "Final Generic Environmental Impact Statement on Uranium Milling Summary and Text," NUREG-0706 Vol. I.

Nuclear Regulatory Agency, 1980, "Final Generic Environmental Impact Statement on Uranium Milling," NUREG-0706 Vol. III, Appendix G.

Nuclear Regulatory Commission, 1982, "Calculational Models for Estimating Radiation Doses to Man from Airborne Radioactive Materials Resulting from Uranium Milling Operations," Regulatory Guide 3.51.

Nuclear Regulatory Commission, 1987, "Methods for Estimating Radioactive and Toxic Airborne Source Terms for Uranium Milling Operations," Regulatory Guide 3.59.

Strange, D.L., and T.J. Bander, 1984, MILDOS – A Computer Program for Calculating Environmental Radiation Doses from Uranium Recovery Operations, NUREG/CR-2011, PNL:-3767, Pacific Northwest Laboratory, Richland, WA, for the U.S. Nuclear Regulatory Commission, Washington, D.C.

Yuan, Y. C., J. H. C. Wang, and A. Zielen, 1998, "MILDOS-AREA: An Enhanced Version of MILDOS for Large-Area Sources," ANL/ES-161.

Copyright 2009, Kleinfelder

13. ESTIMATING RELEASES AND WASTE TREAMENT EFFICIENCIES FOR THE TRI FORM (PARTIAL)

560488002

ESTIMATING RELEASES AND WASTE-TREATMENT EFFICIENCIES FOR THE TOXIC CHEMICAL RELEASE INVENTORY FORM

Section 313 of the
Emergency Planning and Community
Right-to-Know Act of 1986

PN 3687-33, 3687-40, 3687-52
Contract No. 68-02-4248
Work Assignment No. P2-10, P2-17 and P3-4

U.S. ENVIRONMENTAL PROTECTION AGENCY
OFFICE OF PESTICIDES AND TOXIC SUBSTANCES
WASHINGTON, D.C. 20460

December 1987

where

F_{vap} = fraction of fluid vaporized, dimensionless

C_{pl} = heat capacity of liquid at a constant pressure at temperature of system, Btu/lb-°F

T_1 = temperature of liquid in system, °F

T_b = boiling point of liquid at atmospheric pressure, °F

H_{vap} = heat of vaporization, Btu/lb

This fraction can be multiplied by the generation rate obtained with equations in Subsection 6.2.1 (liquid discharge) or Subsection 6.2.4 (two-phase discharge) to obtain the quantity of chemical emitted to air as it is being discharged.

For a chemical in a mixture, use the boiling point and heat capacity of the chemical as before. The system temperature will be the same for all the chemicals in the mixture. Multiply the fraction flashed by the release rate calculated according to instructions for mixtures in Section 6.2.1.

6.2.3 Vaporization Model

A liquid chemical that is spilled onto the ground may spread out over an area, vaporize, and thus result in an air emission. A vaporization model developed by Clements can be used to estimate the rate of evaporation if the size (area) of the spill is known or can be estimated. This is a simple vaporization model, but other available spill models (TRC 1986) are more complex and may require more input data.

$$W = \frac{MKAP^{\circ}}{RT_1}$$

where

W = vapor generation rate, lb/second

M = molecular weight of chemical

A = area of spill, ft^2

P° = vapor pressure of chemical, psia, at temperature T_1 [can assume 25°C (77°F) if not known]

R = universal gas constant, 10.73 psia-ft^3/°R-lb mole

T_1 = temperature of liquid spilled, °R = °F + 460

K = gas-phase mass transfer coefficient, ft/second

$$K = 0.00438\ (U)^{0.78}\left[\frac{D}{3.1 \times 10^{-4}}\right]^{2/3}$$

where D = diffusion coefficient for chemical in air, ft²/second
U = Windspeed, miles/h

Diffusion coefficients can be found in chemical handbooks, usually in cm^2/second (converted to ft^2/second by multiplying cm²/second by 1.08 x 10^{-3}).

If D is not available, use the following equation instead to calculate K.

$$K = 0.00438\ (U)^{0.78}\ \left(\frac{18}{M}\right)^{1/3},\ \text{ft/second}$$

For a chemical in a spilled mixture, use the partial pressure, P_A, for the chemical instead of the chemical's vapor pressure. See Section 3.1.1 to calculate P_A; M and K remain chemical specific parameters.

6.2.4 Two-Phase Discharge

This method, which is based on the Fauske/Cude method, involves calculating the rate of discharge from two-phase (liquid-gas) critical flows. It is applicable to releases of saturated liquids stored under pressure at a temperature above the normal boiling point, and it is valid only if the calculated fraction of liquid flashing (see Section 6.2.2) is less than 1. This method assumes that the two phases (as discharged) are homogeneous and in mutual equilibrium. A simple empirical method, it yields approximate solutions. Alternative methods are required for more complex situations. The accuracy of this method is questionable for discharges involving long lengths of pipe where two-phase flow may develop within the line.

Two-phase critical flows can occur in failures of connections to the vapor space of vessels containing superheated liquids under pressure. They can also occur in failures of pipework containing superheated liquids remote from the vessel, where a fully developed critical flow would be established. Critical flow exists when velocity of the fluid attains sonic velocity, which can be determined by calculating the critical pressure ratio and using the

14. EPA EPCRA EXAMPLE CALCULATIONS

United States
Environmental Protection
Agency

Office of Pollution
Prevention and Toxics
Washington, DC 20460

EPA 745-R-99-007
July 1999

Emergency Planning and Community Right-To-Know Act Section 313 Reporting Guidance for Semiconductor Manufacturing

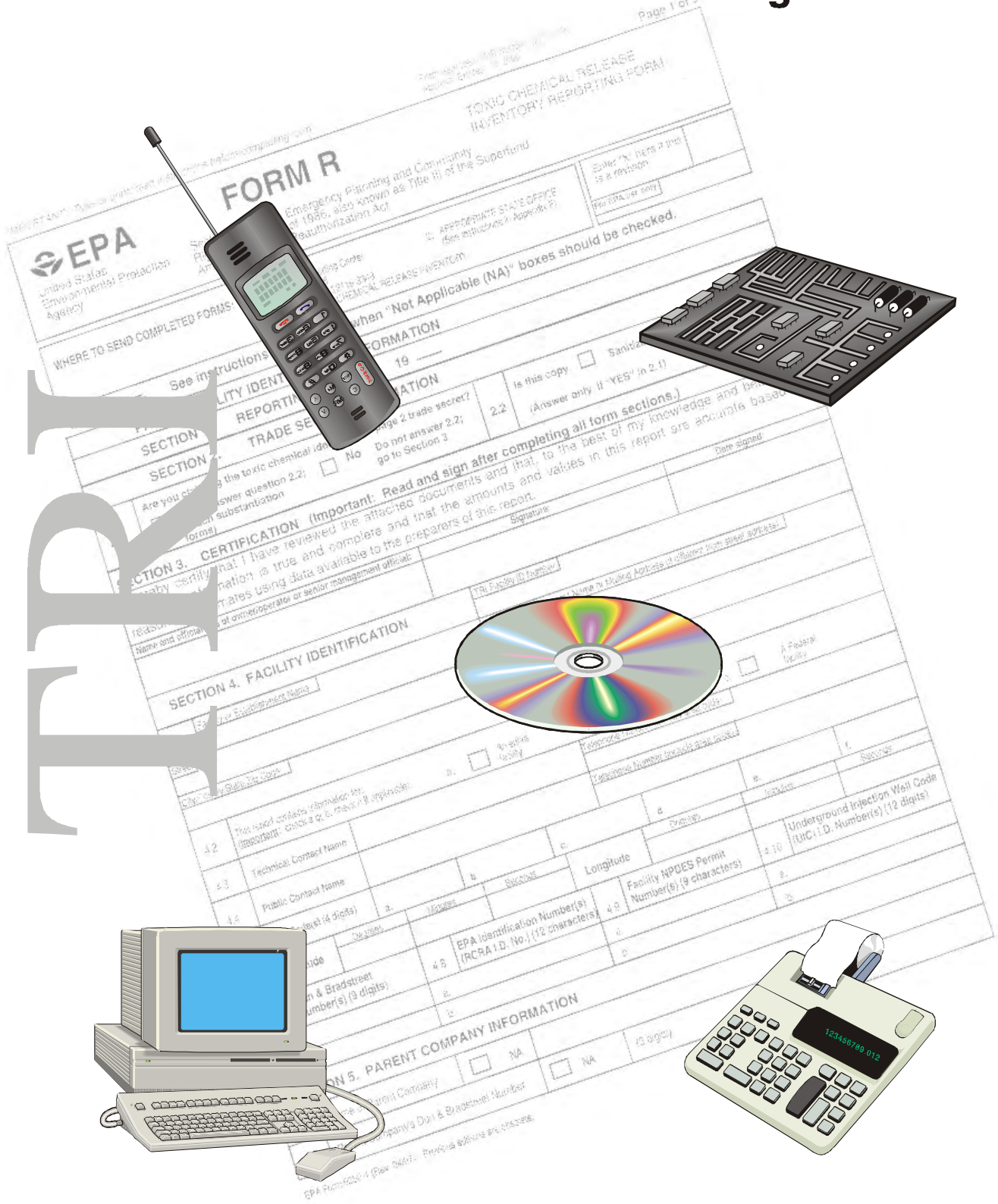

Example - Cleaning

Your facility uses methanol as a cleaner in a wet bath that is operated 5 days a week, 50 weeks per year, for 8 hours each day.

You can estimate methanol emissions using mass transfer kinetics and the following equation (from *Estimating Releases and Waste Treatment Efficiencies for the Toxic Chemical Release and Inventory Form*):

$$W_x = \frac{Mw_x \times K \times A \times P_{vap,x}}{R \times T}$$

where:

W_x	=	Evaporation rate of pollutant X (lb/sec)
Mw_x	=	Molecular weight of pollutant X (lb/lb-mole)
K	=	Gas-phase mass transfer coefficient (ft/sec)
	=	$0.00438 \times U^{0.78} \times (18/Mw_x)^{1/3}$
U	=	Wind speed (miles/hr)
A	=	Surface area (ft^2)
$P_{vap,x}$	=	Vapor pressure of pollutant X (psia)
R	=	Ideal gas constant (10.73 psia × ft^3/ R × lb-mole)
T	=	Temperature of bath (R)

Given the following data:

Mw_x	=	32 lb methanol/lb-mole
U	=	1.7 miles/hr (default value)
A	=	1 ft^2 (assumed surface area of your bath)
$P_{vap,x}$	=	1.91 psia (pure vapor pressure of methanol)
T	=	533 R, R = (9/5) × (C + 273)
R	=	10.73 psia × ft^3/ R × lb-mole

First, calculate the mass transfer coefficient, K:

$$K = 0.00438 \times U^{0.78} \times (18/Mw_x)^{1/3}$$
$$= 0.00547 \text{ (ft/sec)}$$

Then, calculate W_x:

$$W_x = \frac{Mw_x \times K \times A \times P_{vap,x}}{R \times T}$$

$$= (32 \text{ lb/mole}) \times (0.00547 \text{ ft/sec}) \times (1 \text{ ft}^2) \times (1.91 \text{ psia}) \div (10.73 \text{ psia ft}^3) \div (\text{ R} \times \text{lb-mole}) \div (533 \text{ R})$$

$$= 5.84 \times 10^{-5} \text{ lb/sec}$$

You can then calculate your annual emissions as follows:

Annual Methanol Emissions = Emissions (lb/sec) × operating schedule

$$= (5.84 \times 10^{-5} \text{ lb/sec}) \times \left(\frac{60 \text{ sec}}{\text{minute}}\right) \times \left(\frac{60 \text{ min}}{\text{hr}}\right) \times \left(\frac{8 \text{ hr}}{\text{day}}\right) \times \left(\frac{5 \text{ days}}{\text{wk}}\right) \times \left(\frac{50 \text{ wks}}{\text{yr}}\right)$$

$$= 420 \text{ lb/yr}$$

15. TANKS ANALYSIS FILES

TANKS 4.0.9d
Emissions Report - Detail Format
Tank Indentification and Physical Characteristics

Identification

User Identification:	Kerosene Tank
City:	Montrose
State:	Colorado
Company:	Energy Fuels
Type of Tank:	Vertical Fixed Roof Tank
Description:	Uranium SX Kerosene Storage Tank

Tank Dimensions

Shell Height (ft):		20.00
Diameter (ft):		18.00
Liquid Height (ft) :		20.00
Avg. Liquid Height (ft):		10.00
Volume (gallons):		38,071.33
Turnovers:		5.31
Net Throughput(gal/yr):		202,222.00
Is Tank Heated (y/n):	N	

Paint Characteristics

Shell Color/Shade:	White/White
Shell Condition	Good
Roof Color/Shade:	White/White
Roof Condition:	Good

Roof Characteristics

Type:	Cone	
Height (ft)		0.56
Slope (ft/ft) (Cone Roof)		0.06

Breather Vent Settings

Vacuum Settings (psig):	-0.03
Pressure Settings (psig)	0.03

Meterological Data used in Emissions Calculations: Grand Junction, Colorado (Avg Atmospheric Pressure = 12.37 psia)

TANKS 4.0.9d
Emissions Report - Detail Format
Liquid Contents of Storage Tank

Kerosene Tank - Vertical Fixed Roof Tank
Montrose, Colorado

Mixture/Component	Month	Daily Liquid Surf. Temperature (deg F) Avg.	Min.	Max.	Liquid Bulk Temp (deg F)	Vapor Pressure (psia) Avg.	Min.	Max.	Vapor Mol. Weight.	Liquid Mass Fract.	Vapor Mass Fract.	Mol. Weight	Basis for Vapor Pressure Calculations
Jet kerosene	All	55.06	48.57	61.56	52.95	0.0073	0.0057	0.0089	130.0000			162.00	Option 1: VP50 = .006 VP60 = .0085

TANKS 4.0.9d
Emissions Report - Detail Format
Detail Calculations (AP-42)

Kerosene Tank - Vertical Fixed Roof Tank
Montrose, Colorado

Annual Emission Calcaulations

Standing Losses (lb):	7.3906
Vapor Space Volume (cu ft):	2,592.4030
Vapor Density (lb/cu ft):	0.0002
Vapor Space Expansion Factor:	0.0459
Vented Vapor Saturation Factor:	0.9961
Tank Vapor Space Volume:	
Vapor Space Volume (cu ft):	2,592.4030
Tank Diameter (ft):	18.0000
Vapor Space Outage (ft):	10.1875
Tank Shell Height (ft):	20.0000
Average Liquid Height (ft):	10.0000
Roof Outage (ft):	0.1875
Roof Outage (Cone Roof)	
Roof Outage (ft):	0.1875
Roof Height (ft):	0.5625
Roof Slope (ft/ft):	0.0625
Shell Radius (ft):	9.0000
Vapor Density	
Vapor Density (lb/cu ft):	0.0002
Vapor Molecular Weight (lb/lb-mole):	130.0000
Vapor Pressure at Daily Average Liquid Surface Temperature (psia):	0.0073
Daily Avg. Liquid Surface Temp. (deg. R):	514.7342
Daily Average Ambient Temp. (deg. F):	52.9333
Ideal Gas Constant R (psia cuft / (lb-mol-deg R)):	10.731
Liquid Bulk Temperature (deg. R):	512.6233
Tank Paint Solar Absorptance (Shell):	0.1700
Tank Paint Solar Absorptance (Roof):	0.1700
Daily Total Solar Insulation Factor (Btu/sqft day):	1,578.3125
Vapor Space Expansion Factor	
Vapor Space Expansion Factor:	0.0459
Daily Vapor Temperature Range (deg. R):	25.9688
Daily Vapor Pressure Range (psia):	0.0032
Breather Vent Press. Setting Range(psia):	0.0600
Vapor Pressure at Daily Average Liquid Surface Temperature (psia):	0.0073
Vapor Pressure at Daily Minimum Liquid Surface Temperature (psia):	0.0057
Vapor Pressure at Daily Maximum Liquid Surface Temperature (psia):	0.0089
Daily Avg. Liquid Surface Temp. (deg R):	514.7342
Daily Min. Liquid Surface Temp. (deg R):	508.2420
Daily Max. Liquid Surface Temp. (deg R):	521.2264
Daily Ambient Temp. Range (deg. R):	25.6333
Vented Vapor Saturation Factor	
Vented Vapor Saturation Factor:	0.9961
Vapor Pressure at Daily Average Liquid: Surface Temperature (psia):	0.0073

Vapor Space Outage (ft):	10.1875
Working Losses (lb):	4.5480
Vapor Molecular Weight (lb/lb-mole):	130.0000
Vapor Pressure at Daily Average Liquid Surface Temperature (psia):	0.0073
Annual Net Throughput (gal/yr.):	202,222.0000
Annual Turnovers:	5.3117
Turnover Factor:	1.0000
Maximum Liquid Volume (gal):	38,071.3330
Maximum Liquid Height (ft):	20.0000
Tank Diameter (ft):	18.0000
Working Loss Product Factor:	1.0000
Total Losses (lb):	11.9386

TANKS 4.0.9d
Emissions Report - Detail Format
Individual Tank Emission Totals

Emissions Report for: Annual

Kerosene Tank - Vertical Fixed Roof Tank
Montrose, Colorado

	Losses(lbs)		
Components	Working Loss	Breathing Loss	Total Emissions
Jet kerosene	4.55	7.39	11.94

TANKS 4.0.9d
Emissions Report - Detail Format
Tank Indentification and Physical Characteristics

Identification

User Identification:	Organic Makeup Tank
City:	Montrose
State:	Colorado
Company:	Energy Fuels
Type of Tank:	Vertical Fixed Roof Tank
Description:	Uranium SX Organic Makeup Tank 94% Kerosene, 1% Trimethylamine, 3% Isodecanol (VOC emissions modeled as 100% kerosene)

Tank Dimensions

Shell Height (ft):		10.00
Diameter (ft):		10.00
Liquid Height (ft) :		10.00
Avg. Liquid Height (ft):		5.00
Volume (gallons):		5,875.21
Turnovers:		34.42
Net Throughput(gal/yr):		202,222.00
Is Tank Heated (y/n):	N	

Paint Characteristics

Shell Color/Shade:	White/White
Shell Condition	Good
Roof Color/Shade:	White/White
Roof Condition:	Good

Roof Characteristics

Type:	Cone	
Height (ft)		0.31
Slope (ft/ft) (Cone Roof)		0.06

Breather Vent Settings

Vacuum Settings (psig):	-0.03
Pressure Settings (psig)	0.03

Meterological Data used in Emissions Calculations: Grand Junction, Colorado (Avg Atmospheric Pressure = 12.37 psia)

TANKS 4.0.9d
Emissions Report - Detail Format
Liquid Contents of Storage Tank

Organic Makeup Tank - Vertical Fixed Roof Tank
Montrose, Colorado

Mixture/Component	Month	Daily Liquid Surf. Temperature (deg F) Avg.	Min.	Max.	Liquid Bulk Temp (deg F)	Vapor Pressure (psia) Avg.	Min.	Max.	Vapor Mol. Weight.	Liquid Mass Fract.	Vapor Mass Fract.	Mol. Weight	Basis for Vapor Pressure Calculations
Jet kerosene	All	55.06	48.57	61.56	52.95	0.0073	0.0057	0.0089	130.0000			162.00	Option 1: VP50 = .006 VP60 = .0085

TANKS 4.0.9d
Emissions Report - Detail Format
Detail Calculations (AP-42)

Organic Makeup Tank - Vertical Fixed Roof Tank
Montrose, Colorado

Annual Emission Calcaulations	
Standing Losses (lb):	1.1451
Vapor Space Volume (cu ft):	400.8803
Vapor Density (lb/cu ft):	0.0002
Vapor Space Expansion Factor:	0.0459
Vented Vapor Saturation Factor:	0.9980
Tank Vapor Space Volume:	
Vapor Space Volume (cu ft):	400.8803
Tank Diameter (ft):	10.0000
Vapor Space Outage (ft):	5.1042
Tank Shell Height (ft):	10.0000
Average Liquid Height (ft):	5.0000
Roof Outage (ft):	0.1042
Roof Outage (Cone Roof)	
Roof Outage (ft):	0.1042
Roof Height (ft):	0.3125
Roof Slope (ft/ft):	0.0625
Shell Radius (ft):	5.0000
Vapor Density	
Vapor Density (lb/cu ft):	0.0002
Vapor Molecular Weight (lb/lb-mole):	130.0000
Vapor Pressure at Daily Average Liquid Surface Temperature (psia):	0.0073
Daily Avg. Liquid Surface Temp. (deg. R):	514.7342
Daily Average Ambient Temp. (deg. F):	52.9333
Ideal Gas Constant R (psia cuft / (lb-mol-deg R)):	10.731
Liquid Bulk Temperature (deg. R):	512.6233
Tank Paint Solar Absorptance (Shell):	0.1700
Tank Paint Solar Absorptance (Roof):	0.1700
Daily Total Solar Insulation Factor (Btu/sqft day):	1,578.3125
Vapor Space Expansion Factor	
Vapor Space Expansion Factor:	0.0459
Daily Vapor Temperature Range (deg. R):	25.9688
Daily Vapor Pressure Range (psia):	0.0032
Breather Vent Press. Setting Range(psia):	0.0600
Vapor Pressure at Daily Average Liquid Surface Temperature (psia):	0.0073
Vapor Pressure at Daily Minimum Liquid Surface Temperature (psia):	0.0057
Vapor Pressure at Daily Maximum Liquid Surface Temperature (psia):	0.0089
Daily Avg. Liquid Surface Temp. (deg R):	514.7342
Daily Min. Liquid Surface Temp. (deg R):	508.2420
Daily Max. Liquid Surface Temp. (deg R):	521.2264
Daily Ambient Temp. Range (deg. R):	25.6333
Vented Vapor Saturation Factor	
Vented Vapor Saturation Factor:	0.9980
Vapor Pressure at Daily Average Liquid: Surface Temperature (psia):	0.0073

Vapor Space Outage (ft):	5.1042
Working Losses (lb):	4.5480
Vapor Molecular Weight (lb/lb-mole):	130.0000
Vapor Pressure at Daily Average Liquid Surface Temperature (psia):	0.0073
Annual Net Throughput (gal/yr.):	202,222.0000
Annual Turnovers:	34.4196
Turnover Factor:	1.0000
Maximum Liquid Volume (gal):	5,875.2057
Maximum Liquid Height (ft):	10.0000
Tank Diameter (ft):	10.0000
Working Loss Product Factor:	1.0000
Total Losses (lb):	5.6931

TANKS 4.0.9d
Emissions Report - Detail Format
Individual Tank Emission Totals

Emissions Report for: Annual

Organic Makeup Tank - Vertical Fixed Roof Tank
Montrose, Colorado

	Losses(lbs)		
Components	Working Loss	Breathing Loss	Total Emissions
Jet kerosene	4.55	1.15	5.69

TANKS 4.0.9d
Emissions Report - Detail Format
Tank Indentification and Physical Characteristics

Identification

User Identification:	Sulfuric Acid Storage Tank #1
City:	Montrose
State:	Colorado
Company:	Energy Fuels
Type of Tank:	Vertical Fixed Roof Tank
Description:	Sulfuric Acid Storage Tank #1

Tank Dimensions

Shell Height (ft):		28.00
Diameter (ft):		28.00
Liquid Height (ft) :		28.00
Avg. Liquid Height (ft):		14.00
Volume (gallons):		128,972.52
Turnovers:		22.74
Net Throughput(gal/yr):		2,932,441.00
Is Tank Heated (y/n):	N	

Paint Characteristics

Shell Color/Shade:	White/White
Shell Condition	Good
Roof Color/Shade:	White/White
Roof Condition:	Good

Roof Characteristics

Type:	Cone	
Height (ft)		0.88
Slope (ft/ft) (Cone Roof)		0.06

Breather Vent Settings

Vacuum Settings (psig):	-0.03
Pressure Settings (psig)	0.03

Meterological Data used in Emissions Calculations: Grand Junction, Colorado (Avg Atmospheric Pressure = 12.37 psia)

TANKS 4.0.9d
Emissions Report - Detail Format
Liquid Contents of Storage Tank

Sulfuric Acid Storage Tank #1 - Vertical Fixed Roof Tank
Montrose, Colorado

Mixture/Component	Month	Daily Liquid Surf. Temperature (deg F) Avg.	Min.	Max.	Liquid Bulk Temp (deg F)	Vapor Pressure (psia) Avg.	Min.	Max.	Vapor Mol. Weight.	Liquid Mass Fract.	Vapor Mass Fract.	Mol. Weight	Basis for Vapor Pressure Calculations
Sulfuric Acid	All	55.06	48.57	61.56	52.95	0.0004	0.0002	0.0006	98.0800			98.08	Option 1: VP50 = .000245 VP60 = .000551

TANKS 4.0.9d
Emissions Report - Detail Format
Detail Calculations (AP-42)

Sulfuric Acid Storage Tank #1 - Vertical Fixed Roof Tank
Montrose, Colorado

Annual Emission Calcaulations	
Standing Losses (lb):	1.0407
Vapor Space Volume (cu ft):	8,800.1246
Vapor Density (lb/cu ft):	0.0000
Vapor Space Expansion Factor:	0.0456
Vented Vapor Saturation Factor:	0.9997
Tank Vapor Space Volume:	
Vapor Space Volume (cu ft):	8,800.1246
Tank Diameter (ft):	28.0000
Vapor Space Outage (ft):	14.2917
Tank Shell Height (ft):	28.0000
Average Liquid Height (ft):	14.0000
Roof Outage (ft):	0.2917
Roof Outage (Cone Roof)	
Roof Outage (ft):	0.2917
Roof Height (ft):	0.8750
Roof Slope (ft/ft):	0.0625
Shell Radius (ft):	14.0000
Vapor Density	
Vapor Density (lb/cu ft):	0.0000
Vapor Molecular Weight (lb/lb-mole):	98.0800
Vapor Pressure at Daily Average Liquid Surface Temperature (psia):	0.0004
Daily Avg. Liquid Surface Temp. (deg. R):	514.7342
Daily Average Ambient Temp. (deg. F):	52.9333
Ideal Gas Constant R (psia cuft / (lb-mol-deg R)):	10.731
Liquid Bulk Temperature (deg. R):	512.6233
Tank Paint Solar Absorptance (Shell):	0.1700
Tank Paint Solar Absorptance (Roof):	0.1700
Daily Total Solar Insulation Factor (Btu/sqft day):	1,578.3125
Vapor Space Expansion Factor	
Vapor Space Expansion Factor:	0.0456
Daily Vapor Temperature Range (deg. R):	25.9688
Daily Vapor Pressure Range (psia):	0.0004
Breather Vent Press. Setting Range(psia):	0.0600
Vapor Pressure at Daily Average Liquid Surface Temperature (psia):	0.0004
Vapor Pressure at Daily Minimum Liquid Surface Temperature (psia):	0.0002
Vapor Pressure at Daily Maximum Liquid Surface Temperature (psia):	0.0006
Daily Avg. Liquid Surface Temp. (deg R):	514.7342
Daily Min. Liquid Surface Temp. (deg R):	508.2420
Daily Max. Liquid Surface Temp. (deg R):	521.2264
Daily Ambient Temp. Range (deg. R):	25.6333
Vented Vapor Saturation Factor	
Vented Vapor Saturation Factor:	0.9997
Vapor Pressure at Daily Average Liquid: Surface Temperature (psia):	0.0004

Vapor Space Outage (ft):	14.2917
Working Losses (lb):	2.7389
Vapor Molecular Weight (lb/lb-mole):	98.0800
Vapor Pressure at Daily Average Liquid Surface Temperature (psia):	0.0004
Annual Net Throughput (gal/yr.):	2,932,441.0000
Annual Turnovers:	22.7369
Turnover Factor:	1.0000
Maximum Liquid Volume (gal):	128,972.5159
Maximum Liquid Height (ft):	28.0000
Tank Diameter (ft):	28.0000
Working Loss Product Factor:	1.0000
Total Losses (lb):	3.7796

TANKS 4.0.9d
Emissions Report - Detail Format
Individual Tank Emission Totals

Emissions Report for: Annual

Sulfuric Acid Storage Tank #1 - Vertical Fixed Roof Tank
Montrose, Colorado

	Losses(lbs)		
Components	Working Loss	Breathing Loss	Total Emissions
Sulfuric Acid	2.74	1.04	3.78

TANKS 4.0.9d
Emissions Report - Detail Format
Tank Indentification and Physical Characteristics

Identification

User Identification:	Sulfuric Acid Storage Tank #2
City:	Montrose
State:	Colorado
Company:	Energy Fuels
Type of Tank:	Vertical Fixed Roof Tank
Description:	Sulfuric Acid Storage Tank #2

Tank Dimensions

Shell Height (ft):		28.00
Diameter (ft):		28.00
Liquid Height (ft) :		28.00
Avg. Liquid Height (ft):		14.00
Volume (gallons):		128,972.52
Turnovers:		22.74
Net Throughput(gal/yr):		2,932,441.00
Is Tank Heated (y/n):	N	

Paint Characteristics

Shell Color/Shade:	White/White
Shell Condition	Good
Roof Color/Shade:	White/White
Roof Condition:	Good

Roof Characteristics

Type:	Cone	
Height (ft)		0.88
Slope (ft/ft) (Cone Roof)		0.06

Breather Vent Settings

Vacuum Settings (psig):	-0.03
Pressure Settings (psig)	0.03

Meterological Data used in Emissions Calculations: Grand Junction, Colorado (Avg Atmospheric Pressure = 12.37 psia)

TANKS 4.0.9d
Emissions Report - Detail Format
Liquid Contents of Storage Tank

Sulfuric Acid Storage Tank #2 - Vertical Fixed Roof Tank
Montrose, Colorado

Mixture/Component	Month	Daily Liquid Surf. Temperature (deg F) Avg.	Min.	Max.	Liquid Bulk Temp (deg F)	Vapor Pressure (psia) Avg.	Min.	Max.	Vapor Mol. Weight.	Liquid Mass Fract.	Vapor Mass Fract.	Mol. Weight	Basis for Vapor Pressure Calculations
Sulfuric Acid	All	55.06	48.57	61.56	52.95	0.0004	0.0002	0.0006	98.0800			98.08	Option 1: VP50 = .000245 VP60 = .000551

TANKS 4.0.9d
Emissions Report - Detail Format
Detail Calculations (AP-42)

Sulfuric Acid Storage Tank #2 - Vertical Fixed Roof Tank
Montrose, Colorado

Annual Emission Calcaulations	
Standing Losses (lb):	1.0407
Vapor Space Volume (cu ft):	8,800.1246
Vapor Density (lb/cu ft):	0.0000
Vapor Space Expansion Factor:	0.0456
Vented Vapor Saturation Factor:	0.9997
Tank Vapor Space Volume:	
Vapor Space Volume (cu ft):	8,800.1246
Tank Diameter (ft):	28.0000
Vapor Space Outage (ft):	14.2917
Tank Shell Height (ft):	28.0000
Average Liquid Height (ft):	14.0000
Roof Outage (ft):	0.2917
Roof Outage (Cone Roof)	
Roof Outage (ft):	0.2917
Roof Height (ft):	0.8750
Roof Slope (ft/ft):	0.0625
Shell Radius (ft):	14.0000
Vapor Density	
Vapor Density (lb/cu ft):	0.0000
Vapor Molecular Weight (lb/lb-mole):	98.0800
Vapor Pressure at Daily Average Liquid Surface Temperature (psia):	0.0004
Daily Avg. Liquid Surface Temp. (deg. R):	514.7342
Daily Average Ambient Temp. (deg. F):	52.9333
Ideal Gas Constant R (psia cuft / (lb-mol-deg R)):	10.731
Liquid Bulk Temperature (deg. R):	512.6233
Tank Paint Solar Absorptance (Shell):	0.1700
Tank Paint Solar Absorptance (Roof):	0.1700
Daily Total Solar Insulation Factor (Btu/sqft day):	1,578.3125
Vapor Space Expansion Factor	
Vapor Space Expansion Factor:	0.0456
Daily Vapor Temperature Range (deg. R):	25.9688
Daily Vapor Pressure Range (psia):	0.0004
Breather Vent Press. Setting Range(psia):	0.0600
Vapor Pressure at Daily Average Liquid Surface Temperature (psia):	0.0004
Vapor Pressure at Daily Minimum Liquid Surface Temperature (psia):	0.0002
Vapor Pressure at Daily Maximum Liquid Surface Temperature (psia):	0.0006
Daily Avg. Liquid Surface Temp. (deg R):	514.7342
Daily Min. Liquid Surface Temp. (deg R):	508.2420
Daily Max. Liquid Surface Temp. (deg R):	521.2264
Daily Ambient Temp. Range (deg. R):	25.6333
Vented Vapor Saturation Factor	
Vented Vapor Saturation Factor:	0.9997
Vapor Pressure at Daily Average Liquid: Surface Temperature (psia):	0.0004

Vapor Space Outage (ft):	14.2917
Working Losses (lb):	2.7389
Vapor Molecular Weight (lb/lb-mole):	98.0800
Vapor Pressure at Daily Average Liquid Surface Temperature (psia):	0.0004
Annual Net Throughput (gal/yr.):	2,932,441.0000
Annual Turnovers:	22.7369
Turnover Factor:	1.0000
Maximum Liquid Volume (gal):	128,972.5159
Maximum Liquid Height (ft):	28.0000
Tank Diameter (ft):	28.0000
Working Loss Product Factor:	1.0000
Total Losses (lb):	3.7796

TANKS 4.0.9d
Emissions Report - Detail Format
Individual Tank Emission Totals

Emissions Report for: Annual

Sulfuric Acid Storage Tank #2 - Vertical Fixed Roof Tank
Montrose, Colorado

	Losses(lbs)		
Components	Working Loss	Breathing Loss	Total Emissions
Sulfuric Acid	2.74	1.04	3.78

TANKS 4.0.9d
Emissions Report - Detail Format
Tank Indentification and Physical Characteristics

Identification

User Identification:	Sulfuric Acid Storage Tank #3
City:	Montrose
State:	Colorado
Company:	Energy Fuels
Type of Tank:	Vertical Fixed Roof Tank
Description:	Sulfuric Acid Storage Tank #3

Tank Dimensions

Shell Height (ft):		28.00
Diameter (ft):		28.00
Liquid Height (ft) :		28.00
Avg. Liquid Height (ft):		14.00
Volume (gallons):		128,972.52
Turnovers:		22.74
Net Throughput(gal/yr):		2,932,441.00
Is Tank Heated (y/n):	N	

Paint Characteristics

Shell Color/Shade:	White/White
Shell Condition	Good
Roof Color/Shade:	White/White
Roof Condition:	Good

Roof Characteristics

Type:	Cone	
Height (ft)		0.88
Slope (ft/ft) (Cone Roof)		0.06

Breather Vent Settings

Vacuum Settings (psig):	-0.03
Pressure Settings (psig)	0.03

Meterological Data used in Emissions Calculations: Grand Junction, Colorado (Avg Atmospheric Pressure = 12.37 psia)

TANKS 4.0.9d
Emissions Report - Detail Format
Liquid Contents of Storage Tank

Sulfuric Acid Storage Tank #3 - Vertical Fixed Roof Tank
Montrose, Colorado

Mixture/Component	Month	Daily Liquid Surf. Temperature (deg F) Avg.	Min.	Max.	Liquid Bulk Temp (deg F)	Vapor Pressure (psia) Avg.	Min.	Max.	Vapor Mol. Weight.	Liquid Mass Fract.	Vapor Mass Fract.	Mol. Weight	Basis for Vapor Pressure Calculations
Sulfuric Acid	All	55.06	48.57	61.56	52.95	0.0004	0.0002	0.0006	98.0800			98.08	Option 1: VP50 = .000245 VP60 = .000551

TANKS 4.0.9d
Emissions Report - Detail Format
Detail Calculations (AP-42)

Sulfuric Acid Storage Tank #3 - Vertical Fixed Roof Tank
Montrose, Colorado

Annual Emission Calcaulations	
Standing Losses (lb):	1.0407
Vapor Space Volume (cu ft):	8,800.1246
Vapor Density (lb/cu ft):	0.0000
Vapor Space Expansion Factor:	0.0456
Vented Vapor Saturation Factor:	0.9997
Tank Vapor Space Volume:	
Vapor Space Volume (cu ft):	8,800.1246
Tank Diameter (ft):	28.0000
Vapor Space Outage (ft):	14.2917
Tank Shell Height (ft):	28.0000
Average Liquid Height (ft):	14.0000
Roof Outage (ft):	0.2917
Roof Outage (Cone Roof)	
Roof Outage (ft):	0.2917
Roof Height (ft):	0.8750
Roof Slope (ft/ft):	0.0625
Shell Radius (ft):	14.0000
Vapor Density	
Vapor Density (lb/cu ft):	0.0000
Vapor Molecular Weight (lb/lb-mole):	98.0800
Vapor Pressure at Daily Average Liquid Surface Temperature (psia):	0.0004
Daily Avg. Liquid Surface Temp. (deg. R):	514.7342
Daily Average Ambient Temp. (deg. F):	52.9333
Ideal Gas Constant R (psia cuft / (lb-mol-deg R)):	10.731
Liquid Bulk Temperature (deg. R):	512.6233
Tank Paint Solar Absorptance (Shell):	0.1700
Tank Paint Solar Absorptance (Roof):	0.1700
Daily Total Solar Insulation Factor (Btu/sqft day):	1,578.3125
Vapor Space Expansion Factor	
Vapor Space Expansion Factor:	0.0456
Daily Vapor Temperature Range (deg. R):	25.9688
Daily Vapor Pressure Range (psia):	0.0004
Breather Vent Press. Setting Range(psia):	0.0600
Vapor Pressure at Daily Average Liquid Surface Temperature (psia):	0.0004
Vapor Pressure at Daily Minimum Liquid Surface Temperature (psia):	0.0002
Vapor Pressure at Daily Maximum Liquid Surface Temperature (psia):	0.0006
Daily Avg. Liquid Surface Temp. (deg R):	514.7342
Daily Min. Liquid Surface Temp. (deg R):	508.2420
Daily Max. Liquid Surface Temp. (deg R):	521.2264
Daily Ambient Temp. Range (deg. R):	25.6333
Vented Vapor Saturation Factor	
Vented Vapor Saturation Factor:	0.9997
Vapor Pressure at Daily Average Liquid: Surface Temperature (psia):	0.0004

Vapor Space Outage (ft):	14.2917
Working Losses (lb):	2.7389
Vapor Molecular Weight (lb/lb-mole):	98.0800
Vapor Pressure at Daily Average Liquid Surface Temperature (psia):	0.0004
Annual Net Throughput (gal/yr.):	2,932,441.0000
Annual Turnovers:	22.7369
Turnover Factor:	1.0000
Maximum Liquid Volume (gal):	128,972.5159
Maximum Liquid Height (ft):	28.0000
Tank Diameter (ft):	28.0000
Working Loss Product Factor:	1.0000
Total Losses (lb):	3.7796

TANKS 4.0.9d
Emissions Report - Detail Format
Individual Tank Emission Totals

Emissions Report for: Annual

Sulfuric Acid Storage Tank #3 - Vertical Fixed Roof Tank
Montrose, Colorado

	Losses(lbs)		
Components	Working Loss	Breathing Loss	Total Emissions
Sulfuric Acid	2.74	1.04	3.78

TANKS 4.0.9d
Emissions Report - Detail Format
Tank Indentification and Physical Characteristics

Identification

User Identification:	Uranium SX Barren Organic Tank
City:	Montrose
State:	Colorado
Company:	Energy Fuels
Type of Tank:	Vertical Fixed Roof Tank
Description:	Uranium SX Barren Organic Tank

Tank Dimensions

Shell Height (ft):	19.00
Diameter (ft):	24.00
Liquid Height (ft) :	19.00
Avg. Liquid Height (ft):	9.50
Volume (gallons):	64,298.25
Turnovers:	3.15
Net Throughput(gal/yr):	202,222.00
Is Tank Heated (y/n):	N

Paint Characteristics

Shell Color/Shade:	White/White
Shell Condition	Good
Roof Color/Shade:	White/White
Roof Condition:	Good

Roof Characteristics

Type:	Cone
Height (ft)	0.75
Slope (ft/ft) (Cone Roof)	0.06

Breather Vent Settings

Vacuum Settings (psig):	-0.03
Pressure Settings (psig)	0.03

Meterological Data used in Emissions Calculations: Grand Junction, Colorado (Avg Atmospheric Pressure = 12.37 psia)

TANKS 4.0.9d
Emissions Report - Detail Format
Liquid Contents of Storage Tank

Uranium SX Barren Organic Tank - Vertical Fixed Roof Tank
Montrose, Colorado

Mixture/Component	Month	Daily Liquid Surf. Temperature (deg F) Avg.	Min.	Max.	Liquid Bulk Temp (deg F)	Vapor Pressure (psia) Avg.	Min.	Max.	Vapor Mol. Weight.	Liquid Mass Fract.	Vapor Mass Fract.	Mol. Weight	Basis for Vapor Pressure Calculations
Jet kerosene	All	55.06	48.57	61.56	52.95	0.0073	0.0057	0.0089	130.0000			162.00	Option 1: VP50 = .006 VP60 = .0085

TANKS 4.0.9d
Emissions Report - Detail Format
Detail Calculations (AP-42)

Uranium SX Barren Organic Tank - Vertical Fixed Roof Tank
Montrose, Colorado

Annual Emission Calcaulations	
Standing Losses (lb):	12.5766
Vapor Space Volume (cu ft):	4,410.7961
Vapor Density (lb/cu ft):	0.0002
Vapor Space Expansion Factor:	0.0459
Vented Vapor Saturation Factor:	0.9963
Tank Vapor Space Volume:	
Vapor Space Volume (cu ft):	4,410.7961
Tank Diameter (ft):	24.0000
Vapor Space Outage (ft):	9.7500
Tank Shell Height (ft):	19.0000
Average Liquid Height (ft):	9.5000
Roof Outage (ft):	0.2500
Roof Outage (Cone Roof)	
Roof Outage (ft):	0.2500
Roof Height (ft):	0.7500
Roof Slope (ft/ft):	0.0625
Shell Radius (ft):	12.0000
Vapor Density	
Vapor Density (lb/cu ft):	0.0002
Vapor Molecular Weight (lb/lb-mole):	130.0000
Vapor Pressure at Daily Average Liquid Surface Temperature (psia):	0.0073
Daily Avg. Liquid Surface Temp. (deg. R):	514.7342
Daily Average Ambient Temp. (deg. F):	52.9333
Ideal Gas Constant R (psia cuft / (lb-mol-deg R)):	10.731
Liquid Bulk Temperature (deg. R):	512.6233
Tank Paint Solar Absorptance (Shell):	0.1700
Tank Paint Solar Absorptance (Roof):	0.1700
Daily Total Solar Insulation Factor (Btu/sqft day):	1,578.3125
Vapor Space Expansion Factor	
Vapor Space Expansion Factor:	0.0459
Daily Vapor Temperature Range (deg. R):	25.9688
Daily Vapor Pressure Range (psia):	0.0032
Breather Vent Press. Setting Range(psia):	0.0600
Vapor Pressure at Daily Average Liquid Surface Temperature (psia):	0.0073
Vapor Pressure at Daily Minimum Liquid Surface Temperature (psia):	0.0057
Vapor Pressure at Daily Maximum Liquid Surface Temperature (psia):	0.0089
Daily Avg. Liquid Surface Temp. (deg R):	514.7342
Daily Min. Liquid Surface Temp. (deg R):	508.2420
Daily Max. Liquid Surface Temp. (deg R):	521.2264
Daily Ambient Temp. Range (deg. R):	25.6333
Vented Vapor Saturation Factor	
Vented Vapor Saturation Factor:	0.9963
Vapor Pressure at Daily Average Liquid: Surface Temperature (psia):	0.0073

Vapor Space Outage (ft):	9.7500
Working Losses (lb):	4.5480
Vapor Molecular Weight (lb/lb-mole):	130.0000
Vapor Pressure at Daily Average Liquid Surface Temperature (psia):	0.0073
Annual Net Throughput (gal/yr.):	202,222.0000
Annual Turnovers:	3.1451
Turnover Factor:	1.0000
Maximum Liquid Volume (gal):	64,298.2513
Maximum Liquid Height (ft):	19.0000
Tank Diameter (ft):	24.0000
Working Loss Product Factor:	1.0000
Total Losses (lb):	17.1247

TANKS 4.0.9d
Emissions Report - Detail Format
Individual Tank Emission Totals

Emissions Report for: Annual

Uranium SX Barren Organic Tank - Vertical Fixed Roof Tank
Montrose, Colorado

	Losses(lbs)		
Components	Working Loss	Breathing Loss	Total Emissions
Jet kerosene	4.55	12.58	17.12

TANKS 4.0.9d
Emissions Report - Detail Format
Tank Indentification and Physical Characteristics

Identification

User Identification:	Uranium SX Loaded Organic Tank
City:	Montrose
State:	Colorado
Company:	Energy Fuels
Type of Tank:	Vertical Fixed Roof Tank
Description:	Uranium SX Loaded Organic Tank

Tank Dimensions

Shell Height (ft):	19.00
Diameter (ft):	24.00
Liquid Height (ft) :	19.00
Avg. Liquid Height (ft):	9.50
Volume (gallons):	64,298.25
Turnovers:	3.15
Net Throughput(gal/yr):	202,222.00
Is Tank Heated (y/n):	N

Paint Characteristics

Shell Color/Shade:	White/White
Shell Condition	Good
Roof Color/Shade:	White/White
Roof Condition:	Good

Roof Characteristics

Type:	Cone
Height (ft)	0.75
Slope (ft/ft) (Cone Roof)	0.06

Breather Vent Settings

Vacuum Settings (psig):	-0.03
Pressure Settings (psig)	0.03

Meterological Data used in Emissions Calculations: Grand Junction, Colorado (Avg Atmospheric Pressure = 12.37 psia)

TANKS 4.0.9d
Emissions Report - Detail Format
Liquid Contents of Storage Tank

Uranium SX Loaded Organic Tank - Vertical Fixed Roof Tank
Montrose, Colorado

Mixture/Component	Month	Daily Liquid Surf. Temperature (deg F) Avg.	Min.	Max.	Liquid Bulk Temp (deg F)	Vapor Pressure (psia) Avg.	Min.	Max.	Vapor Mol. Weight.	Liquid Mass Fract.	Vapor Mass Fract.	Mol. Weight	Basis for Vapor Pressure Calculations
Jet kerosene	All	55.06	48.57	61.56	52.95	0.0073	0.0057	0.0089	130.0000			162.00	Option 1: VP50 = .006 VP60 = .0085

TANKS 4.0.9d
Emissions Report - Detail Format
Detail Calculations (AP-42)

Uranium SX Loaded Organic Tank - Vertical Fixed Roof Tank
Montrose, Colorado

Annual Emission Calcaulations	
Standing Losses (lb):	12.5766
Vapor Space Volume (cu ft):	4,410.7961
Vapor Density (lb/cu ft):	0.0002
Vapor Space Expansion Factor:	0.0459
Vented Vapor Saturation Factor:	0.9963
Tank Vapor Space Volume:	
Vapor Space Volume (cu ft):	4,410.7961
Tank Diameter (ft):	24.0000
Vapor Space Outage (ft):	9.7500
Tank Shell Height (ft):	19.0000
Average Liquid Height (ft):	9.5000
Roof Outage (ft):	0.2500
Roof Outage (Cone Roof)	
Roof Outage (ft):	0.2500
Roof Height (ft):	0.7500
Roof Slope (ft/ft):	0.0625
Shell Radius (ft):	12.0000
Vapor Density	
Vapor Density (lb/cu ft):	0.0002
Vapor Molecular Weight (lb/lb-mole):	130.0000
Vapor Pressure at Daily Average Liquid Surface Temperature (psia):	0.0073
Daily Avg. Liquid Surface Temp. (deg. R):	514.7342
Daily Average Ambient Temp. (deg. F):	52.9333
Ideal Gas Constant R (psia cuft / (lb-mol-deg R)):	10.731
Liquid Bulk Temperature (deg. R):	512.6233
Tank Paint Solar Absorptance (Shell):	0.1700
Tank Paint Solar Absorptance (Roof):	0.1700
Daily Total Solar Insulation Factor (Btu/sqft day):	1,578.3125
Vapor Space Expansion Factor	
Vapor Space Expansion Factor:	0.0459
Daily Vapor Temperature Range (deg. R):	25.9688
Daily Vapor Pressure Range (psia):	0.0032
Breather Vent Press. Setting Range(psia):	0.0600
Vapor Pressure at Daily Average Liquid Surface Temperature (psia):	0.0073
Vapor Pressure at Daily Minimum Liquid Surface Temperature (psia):	0.0057
Vapor Pressure at Daily Maximum Liquid Surface Temperature (psia):	0.0089
Daily Avg. Liquid Surface Temp. (deg R):	514.7342
Daily Min. Liquid Surface Temp. (deg R):	508.2420
Daily Max. Liquid Surface Temp. (deg R):	521.2264
Daily Ambient Temp. Range (deg. R):	25.6333
Vented Vapor Saturation Factor	
Vented Vapor Saturation Factor:	0.9963
Vapor Pressure at Daily Average Liquid: Surface Temperature (psia):	0.0073

Vapor Space Outage (ft):	9.7500
Working Losses (lb):	4.5480
Vapor Molecular Weight (lb/lb-mole):	130.0000
Vapor Pressure at Daily Average Liquid Surface Temperature (psia):	0.0073
Annual Net Throughput (gal/yr.):	202,222.0000
Annual Turnovers:	3.1451
Turnover Factor:	1.0000
Maximum Liquid Volume (gal):	64,298.2513
Maximum Liquid Height (ft):	19.0000
Tank Diameter (ft):	24.0000
Working Loss Product Factor:	1.0000
Total Losses (lb):	17.1247

TANKS 4.0.9d
Emissions Report - Detail Format
Individual Tank Emission Totals

Emissions Report for: Annual

Uranium SX Loaded Organic Tank - Vertical Fixed Roof Tank
Montrose, Colorado

	Losses(lbs)		
Components	Working Loss	Breathing Loss	Total Emissions
Jet kerosene	4.55	12.58	17.12

TANKS 4.0.9d
Emissions Report - Detail Format
Tank Indentification and Physical Characteristics

Identification

User Identification:	Vanadium SX Barren Organic Tank
City:	Montrose
State:	Colorado
Company:	Energy Fuels
Type of Tank:	Vertical Fixed Roof Tank
Description:	Vanadium SX Barren Organic Tank

Tank Dimensions

Shell Height (ft):		19.00
Diameter (ft):		24.00
Liquid Height (ft) :		19.00
Avg. Liquid Height (ft):		9.50
Volume (gallons):		64,298.25
Turnovers:		3.15
Net Throughput(gal/yr):		202,222.00
Is Tank Heated (y/n):	N	

Paint Characteristics

Shell Color/Shade:	White/White
Shell Condition	Good
Roof Color/Shade:	White/White
Roof Condition:	Good

Roof Characteristics

Type:	Cone	
Height (ft)		0.75
Slope (ft/ft) (Cone Roof)		0.06

Breather Vent Settings

Vacuum Settings (psig):	-0.03
Pressure Settings (psig)	0.03

Meterological Data used in Emissions Calculations: Grand Junction, Colorado (Avg Atmospheric Pressure = 12.37 psia)

TANKS 4.0.9d
Emissions Report - Detail Format
Liquid Contents of Storage Tank

Vanadium SX Barren Organic Tank - Vertical Fixed Roof Tank
Montrose, Colorado

Mixture/Component	Month	Daily Liquid Surf. Temperature (deg F) Avg.	Min.	Max.	Liquid Bulk Temp (deg F)	Vapor Pressure (psia) Avg.	Min.	Max.	Vapor Mol. Weight.	Liquid Mass Fract.	Vapor Mass Fract.	Mol. Weight	Basis for Vapor Pressure Calculations
Jet kerosene	All	55.06	48.57	61.56	52.95	0.0073	0.0057	0.0089	130.0000			162.00	Option 1: VP50 = .006 VP60 = .0085

TANKS 4.0.9d
Emissions Report - Detail Format
Detail Calculations (AP-42)

Vanadium SX Barren Organic Tank - Vertical Fixed Roof Tank
Montrose, Colorado

Annual Emission Calcaulations	
Standing Losses (lb):	12.5766
Vapor Space Volume (cu ft):	4,410.7961
Vapor Density (lb/cu ft):	0.0002
Vapor Space Expansion Factor:	0.0459
Vented Vapor Saturation Factor:	0.9963
Tank Vapor Space Volume:	
Vapor Space Volume (cu ft):	4,410.7961
Tank Diameter (ft):	24.0000
Vapor Space Outage (ft):	9.7500
Tank Shell Height (ft):	19.0000
Average Liquid Height (ft):	9.5000
Roof Outage (ft):	0.2500
Roof Outage (Cone Roof)	
Roof Outage (ft):	0.2500
Roof Height (ft):	0.7500
Roof Slope (ft/ft):	0.0625
Shell Radius (ft):	12.0000
Vapor Density	
Vapor Density (lb/cu ft):	0.0002
Vapor Molecular Weight (lb/lb-mole):	130.0000
Vapor Pressure at Daily Average Liquid Surface Temperature (psia):	0.0073
Daily Avg. Liquid Surface Temp. (deg. R):	514.7342
Daily Average Ambient Temp. (deg. F):	52.9333
Ideal Gas Constant R (psia cuft / (lb-mol-deg R)):	10.731
Liquid Bulk Temperature (deg. R):	512.6233
Tank Paint Solar Absorptance (Shell):	0.1700
Tank Paint Solar Absorptance (Roof):	0.1700
Daily Total Solar Insulation Factor (Btu/sqft day):	1,578.3125
Vapor Space Expansion Factor	
Vapor Space Expansion Factor:	0.0459
Daily Vapor Temperature Range (deg. R):	25.9688
Daily Vapor Pressure Range (psia):	0.0032
Breather Vent Press. Setting Range(psia):	0.0600
Vapor Pressure at Daily Average Liquid Surface Temperature (psia):	0.0073
Vapor Pressure at Daily Minimum Liquid Surface Temperature (psia):	0.0057
Vapor Pressure at Daily Maximum Liquid Surface Temperature (psia):	0.0089
Daily Avg. Liquid Surface Temp. (deg R):	514.7342
Daily Min. Liquid Surface Temp. (deg R):	508.2420
Daily Max. Liquid Surface Temp. (deg R):	521.2264
Daily Ambient Temp. Range (deg. R):	25.6333
Vented Vapor Saturation Factor	
Vented Vapor Saturation Factor:	0.9963
Vapor Pressure at Daily Average Liquid: Surface Temperature (psia):	0.0073

Vapor Space Outage (ft):	9.7500
Working Losses (lb):	4.5480
Vapor Molecular Weight (lb/lb-mole):	130.0000
Vapor Pressure at Daily Average Liquid Surface Temperature (psia):	0.0073
Annual Net Throughput (gal/yr.):	202,222.0000
Annual Turnovers:	3.1451
Turnover Factor:	1.0000
Maximum Liquid Volume (gal):	64,298.2513
Maximum Liquid Height (ft):	19.0000
Tank Diameter (ft):	24.0000
Working Loss Product Factor:	1.0000
Total Losses (lb):	17.1247

TANKS 4.0.9d
Emissions Report - Detail Format
Individual Tank Emission Totals

Emissions Report for: Annual

Vanadium SX Barren Organic Tank - Vertical Fixed Roof Tank
Montrose, Colorado

	Losses(lbs)		
Components	Working Loss	Breathing Loss	Total Emissions
Jet kerosene	4.55	12.58	17.12

TANKS 4.0.9d
Emissions Report - Detail Format
Tank Indentification and Physical Characteristics

Identification

User Identification:	Vanadium SX Loaded Organic Tank
City:	Montrose
State:	Colorado
Company:	Energy Fuels
Type of Tank:	Vertical Fixed Roof Tank
Description:	Vanadium SX Loaded Organic Tank

Tank Dimensions

Shell Height (ft):		19.00
Diameter (ft):		24.00
Liquid Height (ft) :		19.00
Avg. Liquid Height (ft):		9.50
Volume (gallons):		64,298.25
Turnovers:		3.15
Net Throughput(gal/yr):		202,222.00
Is Tank Heated (y/n):	N	

Paint Characteristics

Shell Color/Shade:	White/White
Shell Condition	Good
Roof Color/Shade:	White/White
Roof Condition:	Good

Roof Characteristics

Type:	Cone	
Height (ft)		0.75
Slope (ft/ft) (Cone Roof)		0.06

Breather Vent Settings

Vacuum Settings (psig):	-0.03
Pressure Settings (psig)	0.03

Meterological Data used in Emissions Calculations: Grand Junction, Colorado (Avg Atmospheric Pressure = 12.37 psia)

TANKS 4.0.9d
Emissions Report - Detail Format
Liquid Contents of Storage Tank

Vanadium SX Loaded Organic Tank - Vertical Fixed Roof Tank
Montrose, Colorado

Mixture/Component	Month	Daily Liquid Surf. Temperature (deg F) Avg.	Min.	Max.	Liquid Bulk Temp (deg F)	Vapor Pressure (psia) Avg.	Min.	Max.	Vapor Mol. Weight.	Liquid Mass Fract.	Vapor Mass Fract.	Mol. Weight	Basis for Vapor Pressure Calculations
Jet kerosene	All	55.06	48.57	61.56	52.95	0.0073	0.0057	0.0089	130.0000			162.00	Option 1: VP50 = .006 VP60 = .0085

TANKS 4.0.9d
Emissions Report - Detail Format
Detail Calculations (AP-42)

Vanadium SX Loaded Organic Tank - Vertical Fixed Roof Tank
Montrose, Colorado

Annual Emission Calcaulations	
Standing Losses (lb):	12.5766
Vapor Space Volume (cu ft):	4,410.7961
Vapor Density (lb/cu ft):	0.0002
Vapor Space Expansion Factor:	0.0459
Vented Vapor Saturation Factor:	0.9963
Tank Vapor Space Volume:	
Vapor Space Volume (cu ft):	4,410.7961
Tank Diameter (ft):	24.0000
Vapor Space Outage (ft):	9.7500
Tank Shell Height (ft):	19.0000
Average Liquid Height (ft):	9.5000
Roof Outage (ft):	0.2500
Roof Outage (Cone Roof)	
Roof Outage (ft):	0.2500
Roof Height (ft):	0.7500
Roof Slope (ft/ft):	0.0625
Shell Radius (ft):	12.0000
Vapor Density	
Vapor Density (lb/cu ft):	0.0002
Vapor Molecular Weight (lb/lb-mole):	130.0000
Vapor Pressure at Daily Average Liquid Surface Temperature (psia):	0.0073
Daily Avg. Liquid Surface Temp. (deg. R):	514.7342
Daily Average Ambient Temp. (deg. F):	52.9333
Ideal Gas Constant R (psia cuft / (lb-mol-deg R)):	10.731
Liquid Bulk Temperature (deg. R):	512.6233
Tank Paint Solar Absorptance (Shell):	0.1700
Tank Paint Solar Absorptance (Roof):	0.1700
Daily Total Solar Insulation Factor (Btu/sqft day):	1,578.3125
Vapor Space Expansion Factor	
Vapor Space Expansion Factor:	0.0459
Daily Vapor Temperature Range (deg. R):	25.9688
Daily Vapor Pressure Range (psia):	0.0032
Breather Vent Press. Setting Range(psia):	0.0600
Vapor Pressure at Daily Average Liquid Surface Temperature (psia):	0.0073
Vapor Pressure at Daily Minimum Liquid Surface Temperature (psia):	0.0057
Vapor Pressure at Daily Maximum Liquid Surface Temperature (psia):	0.0089
Daily Avg. Liquid Surface Temp. (deg R):	514.7342
Daily Min. Liquid Surface Temp. (deg R):	508.2420
Daily Max. Liquid Surface Temp. (deg R):	521.2264
Daily Ambient Temp. Range (deg. R):	25.6333
Vented Vapor Saturation Factor	
Vented Vapor Saturation Factor:	0.9963
Vapor Pressure at Daily Average Liquid: Surface Temperature (psia):	0.0073

Vapor Space Outage (ft):	9.7500
Working Losses (lb):	4.5480
Vapor Molecular Weight (lb/lb-mole):	130.0000
Vapor Pressure at Daily Average Liquid Surface Temperature (psia):	0.0073
Annual Net Throughput (gal/yr.):	202,222.0000
Annual Turnovers:	3.1451
Turnover Factor:	1.0000
Maximum Liquid Volume (gal):	64,298.2513
Maximum Liquid Height (ft):	19.0000
Tank Diameter (ft):	24.0000
Working Loss Product Factor:	1.0000
Total Losses (lb):	17.1247

TANKS 4.0.9d
Emissions Report - Detail Format
Individual Tank Emission Totals

Emissions Report for: Annual

Vanadium SX Loaded Organic Tank - Vertical Fixed Roof Tank
Montrose, Colorado

	Losses(lbs)		
Components	Working Loss	Breathing Loss	Total Emissions
Jet kerosene	4.55	12.58	17.12

TANKS 4.0.9d
Emissions Report - Detail Format
Tank Indentification and Physical Characteristics

Identification

User Identification:	950-TKH-04
City:	Montrose County
State:	Colorado
Company:	Energy Fuels
Type of Tank:	Horizontal Tank
Description:	Gasoline storage tank

Tank Dimensions

Shell Length (ft):		12.50
Diameter (ft):		5.83
Volume (gallons):		2,000.00
Turnovers:		26.00
Net Throughput(gal/yr):		52,000.00
Is Tank Heated (y/n):	N	
Is Tank Underground (y/n):	N	

Paint Characteristics

Shell Color/Shade:	White/White
Shell Condition	Good

Breather Vent Settings

Vacuum Settings (psig):	-0.03
Pressure Settings (psig)	0.03

Meterological Data used in Emissions Calculations: Grand Junction, Colorado (Avg Atmospheric Pressure = 12.37 psia)

TANKS 4.0.9d
Emissions Report - Detail Format
Liquid Contents of Storage Tank

950-TKH-04 - Horizontal Tank
Montrose County, Colorado

Mixture/Component	Month	Daily Liquid Surf. Temperature (deg F) Avg.	Min.	Max.	Liquid Bulk Temp (deg F)	Vapor Pressure (psia) Avg.	Min.	Max.	Vapor Mol. Weight.	Liquid Mass Fract.	Vapor Mass Fract.	Mol. Weight	Basis for Vapor Pressure Calculations
Gasoline (RVP 9)	All	55.06	48.57	61.56	52.95	4.1804	3.6638	4.7542	67.0000			92.00	Option 4: RVP=9, ASTM Slope=3

TANKS 4.0.9d
Emissions Report - Detail Format
Detail Calculations (AP-42)

950-TKH-04 - Horizontal Tank
Montrose County, Colorado

Annual Emission Calcaulations

Standing Losses (lb):	421.3316
Vapor Space Volume (cu ft):	212.5384
Vapor Density (lb/cu ft):	0.0507
Vapor Space Expansion Factor:	0.1763
Vented Vapor Saturation Factor:	0.6076
Tank Vapor Space Volume:	
Vapor Space Volume (cu ft):	212.5384
Tank Diameter (ft):	5.8300
Effective Diameter (ft):	9.6351
Vapor Space Outage (ft):	2.9150
Tank Shell Length (ft):	12.5000
Vapor Density	
Vapor Density (lb/cu ft):	0.0507
Vapor Molecular Weight (lb/lb-mole):	67.0000
Vapor Pressure at Daily Average Liquid Surface Temperature (psia):	4.1804
Daily Avg. Liquid Surface Temp. (deg. R):	514.7342
Daily Average Ambient Temp. (deg. F):	52.9333
Ideal Gas Constant R (psia cuft / (lb-mol-deg R)):	10.731
Liquid Bulk Temperature (deg. R):	512.6233
Tank Paint Solar Absorptance (Shell):	0.1700
Daily Total Solar Insulation Factor (Btu/sqft day):	1,578.3125
Vapor Space Expansion Factor	
Vapor Space Expansion Factor:	0.1763
Daily Vapor Temperature Range (deg. R):	25.9688
Daily Vapor Pressure Range (psia):	1.0903
Breather Vent Press. Setting Range(psia):	0.0600
Vapor Pressure at Daily Average Liquid Surface Temperature (psia):	4.1804
Vapor Pressure at Daily Minimum Liquid Surface Temperature (psia):	3.6638
Vapor Pressure at Daily Maximum Liquid Surface Temperature (psia):	4.7542
Daily Avg. Liquid Surface Temp. (deg R):	514.7342
Daily Min. Liquid Surface Temp. (deg R):	508.2420
Daily Max. Liquid Surface Temp. (deg R):	521.2264
Daily Ambient Temp. Range (deg. R):	25.6333
Vented Vapor Saturation Factor	
Vented Vapor Saturation Factor:	0.6076
Vapor Pressure at Daily Average Liquid: Surface Temperature (psia):	4.1804
Vapor Space Outage (ft):	2.9150
Working Losses (lb):	346.7735
Vapor Molecular Weight (lb/lb-mole):	67.0000
Vapor Pressure at Daily Average Liquid Surface Temperature (psia):	4.1804
Annual Net Throughput (gal/yr.):	52,000.0000
Annual Turnovers:	26.0000
Turnover Factor:	1.0000
Tank Diameter (ft):	5.8300
Working Loss Product Factor:	1.0000
Total Losses (lb):	768.1052

TANKS 4.0.9d
Emissions Report - Detail Format
Individual Tank Emission Totals

Emissions Report for: Annual

950-TKH-04 - Horizontal Tank
Montrose County, Colorado

	Losses(lbs)		
Components	Working Loss	Breathing Loss	Total Emissions
Gasoline (RVP 9)	346.77	421.33	768.11

TANKS 4.0.9d
Emissions Report - Detail Format
Tank Indentification and Physical Characteristics

Identification

User Identification:	950-TKH-01
City:	Montrose County
State:	Colorado
Company:	Energy Fuels
Type of Tank:	Horizontal Tank
Description:	Main Diesel Storage Tank

Tank Dimensions

Shell Length (ft):	32.50
Diameter (ft):	8.50
Volume (gallons):	12,000.00
Turnovers:	17.00
Net Throughput(gal/yr):	204,000.00
Is Tank Heated (y/n):	N
Is Tank Underground (y/n):	N

Paint Characteristics

Shell Color/Shade:	White/White
Shell Condition	Good

Breather Vent Settings

Vacuum Settings (psig):	-0.03
Pressure Settings (psig)	0.03

Meterological Data used in Emissions Calculations: Grand Junction, Colorado (Avg Atmospheric Pressure = 12.37 psia)

TANKS 4.0.9d
Emissions Report - Detail Format
Liquid Contents of Storage Tank

950-TKH-01 - Horizontal Tank
Montrose County, Colorado

Mixture/Component	Month	Daily Liquid Surf. Temperature (deg F) Avg.	Min.	Max.	Liquid Bulk Temp (deg F)	Vapor Pressure (psia) Avg.	Min.	Max.	Vapor Mol. Weight.	Liquid Mass Fract.	Vapor Mass Fract.	Mol. Weight	Basis for Vapor Pressure Calculations
Distillate fuel oil no. 2	All	55.06	48.57	61.56	52.95	0.0055	0.0043	0.0069	130.0000			188.00	Option 1: VP50 = .0045 VP60 = .0065

TANKS 4.0.9d
Emissions Report - Detail Format
Detail Calculations (AP-42)

950-TKH-01 - Horizontal Tank
Montrose County, Colorado

Annual Emission Calcaulations

Standing Losses (lb):	2.5450
Vapor Space Volume (cu ft):	1,174.6580
Vapor Density (lb/cu ft):	0.0001
Vapor Space Expansion Factor:	0.0458
Vented Vapor Saturation Factor:	0.9988
Tank Vapor Space Volume:	
Vapor Space Volume (cu ft):	1,174.6580
Tank Diameter (ft):	8.5000
Effective Diameter (ft):	18.7593
Vapor Space Outage (ft):	4.2500
Tank Shell Length (ft):	32.5000
Vapor Density	
Vapor Density (lb/cu ft):	0.0001
Vapor Molecular Weight (lb/lb-mole):	130.0000
Vapor Pressure at Daily Average Liquid Surface Temperature (psia):	0.0055
Daily Avg. Liquid Surface Temp. (deg. R):	514.7342
Daily Average Ambient Temp. (deg. F):	52.9333
Ideal Gas Constant R (psia cuft / (lb-mol-deg R)):	10.731
Liquid Bulk Temperature (deg. R):	512.6233
Tank Paint Solar Absorptance (Shell):	0.1700
Daily Total Solar Insulation Factor (Btu/sqft day):	1,578.3125
Vapor Space Expansion Factor	
Vapor Space Expansion Factor:	0.0458
Daily Vapor Temperature Range (deg. R):	25.9688
Daily Vapor Pressure Range (psia):	0.0026
Breather Vent Press. Setting Range(psia):	0.0600
Vapor Pressure at Daily Average Liquid Surface Temperature (psia):	0.0055
Vapor Pressure at Daily Minimum Liquid Surface Temperature (psia):	0.0043
Vapor Pressure at Daily Maximum Liquid Surface Temperature (psia):	0.0069
Daily Avg. Liquid Surface Temp. (deg R):	514.7342
Daily Min. Liquid Surface Temp. (deg R):	508.2420
Daily Max. Liquid Surface Temp. (deg R):	521.2264
Daily Ambient Temp. Range (deg. R):	25.6333
Vented Vapor Saturation Factor	
Vented Vapor Saturation Factor:	0.9988
Vapor Pressure at Daily Average Liquid: Surface Temperature (psia):	0.0055
Vapor Space Outage (ft):	4.2500
Working Losses (lb):	3.4810
Vapor Molecular Weight (lb/lb-mole):	130.0000
Vapor Pressure at Daily Average Liquid Surface Temperature (psia):	0.0055
Annual Net Throughput (gal/yr.):	204,000.0000
Annual Turnovers:	17.0000
Turnover Factor:	1.0000
Tank Diameter (ft):	8.5000
Working Loss Product Factor:	1.0000
Total Losses (lb):	6.0260

TANKS 4.0.9d
Emissions Report - Detail Format
Individual Tank Emission Totals

Emissions Report for: Annual

950-TKH-01 - Horizontal Tank
Montrose County, Colorado

	Losses(lbs)		
Components	Working Loss	Breathing Loss	Total Emissions
Distillate fuel oil no. 2	3.48	2.55	6.03