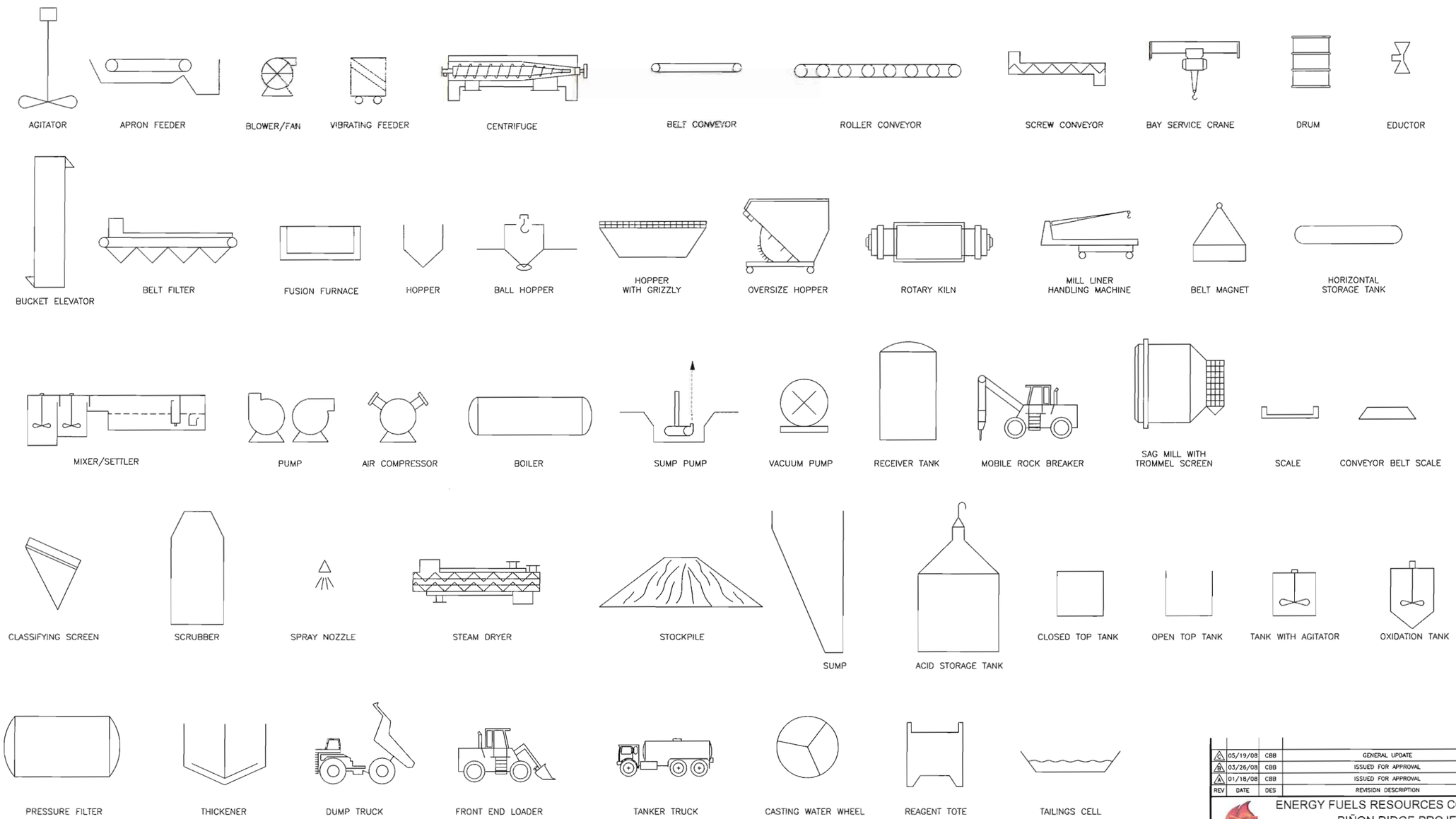

NOTES

1. PROCESS LEGEND FOR LINES IS LOCATED ON DRAWING 100-PI-001 PIPING AND INSTRUMENTATION SYMBOLS

REV	DATE	DES	REVISION DESCRIPTION	CADD	CHK	RVW
3	05/19/08	CBB	GENERAL UPDATE	SJB	KJS	MDSB
2	03/26/08	CBB	ISSUED FOR APPROVAL	SJB	KJS	MDSB
1	01/18/08	CBB	ISSUED FOR APPROVAL	SJB	DES	MDSB

ENERGY FUELS RESOURCES CORPORATION
PIÑON RIDGE PROJECT
MONTROSE COUNTY, COLORADO

MECHANICAL EQUIPMENT SYMBOLS

PROCESS FLOW DIAGRAM

CH2MHILL

PROJECT No.		–	FILE No.	–
DESIGN	CBB	01/08	SCALE –	REV. C
CADD	SJB	01/08	DRAWING	
CHECK	DES	01/08	000-PF-001	
REVIEW	MDSB	01/08		

Plot Time:

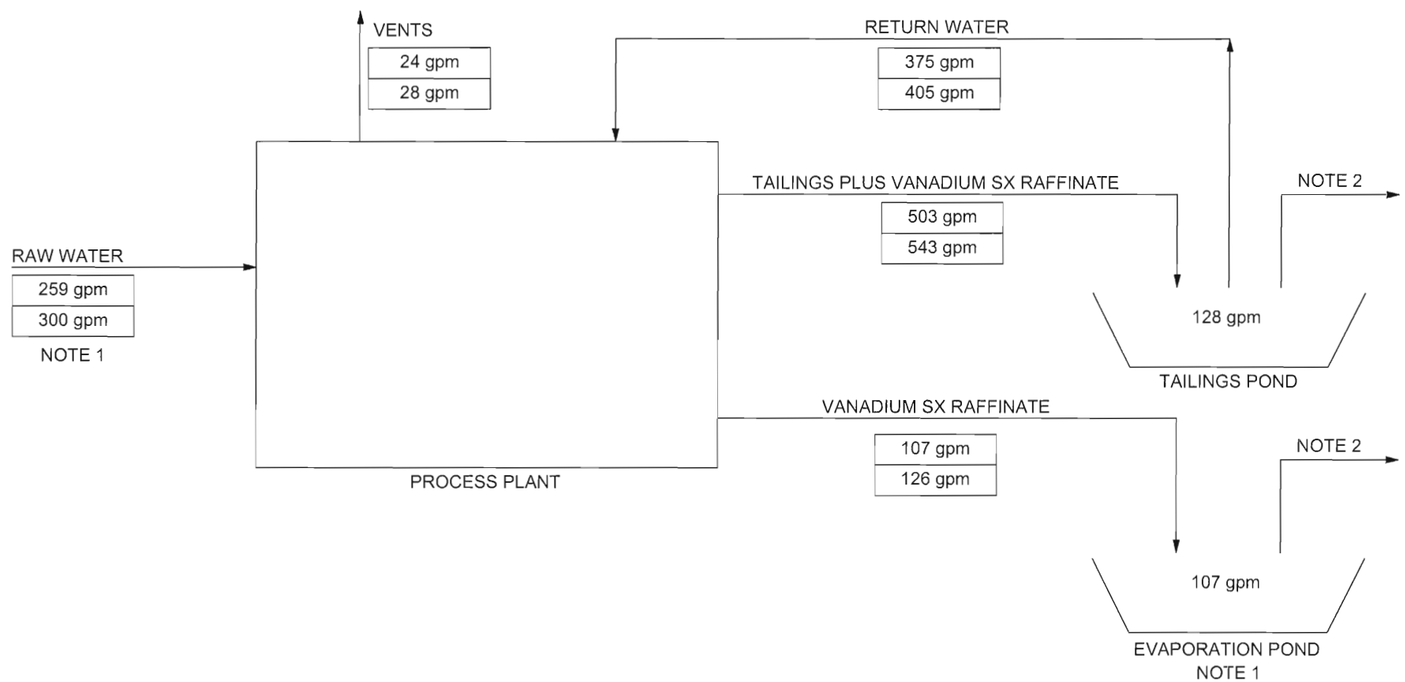

BALANCE
DESIGN

NOTES

1. DESIGN FLOWS INCLUDE INTERMITTENT FLOW RATES.
2. EVAPORATION RATES TO BE PROVIDED BY GOLDER ASSOCIATES INC.

COLORADO REGISTERED PROFESSIONAL ENGINEER DOUGLAS K. MARTIN 26758

Nov 4, 2009

REV	DATE	DES	REVISION DESCRIPTION	CADD	CHK	RVW
D	01/16/09	CBB	GENERAL UPDATE	SJB	KJS	MDSB
C	05/19/08	CBB	GENERAL UPDATE	SJB	KJS	MDSB
B	03/26/08	CBB	GENERAL UPDATE	SJB	KJS	MDSB
A	02/15/08	CBB	ISSUED FOR APPROVAL	SJB	KJS	MDSB

ENERGY FUELS RESOURCES CORPORATION
PIÑON RIDGE PROJECT
MONTROSE COUNTY, COLORADO

PIÑON PROCESS PLANT
OVERALL WATER BALANCE

CH2MHILL

PROJECT No.		365541	FILE No.	–
DESIGN	CBB	02/08	SCALE NONE	REV. C
CADD	SJB	02/08	DRAWING	
CHECK	DES	02/08	000-PF-002	
REVIEW	MDSB	02/08		

Plot Time:

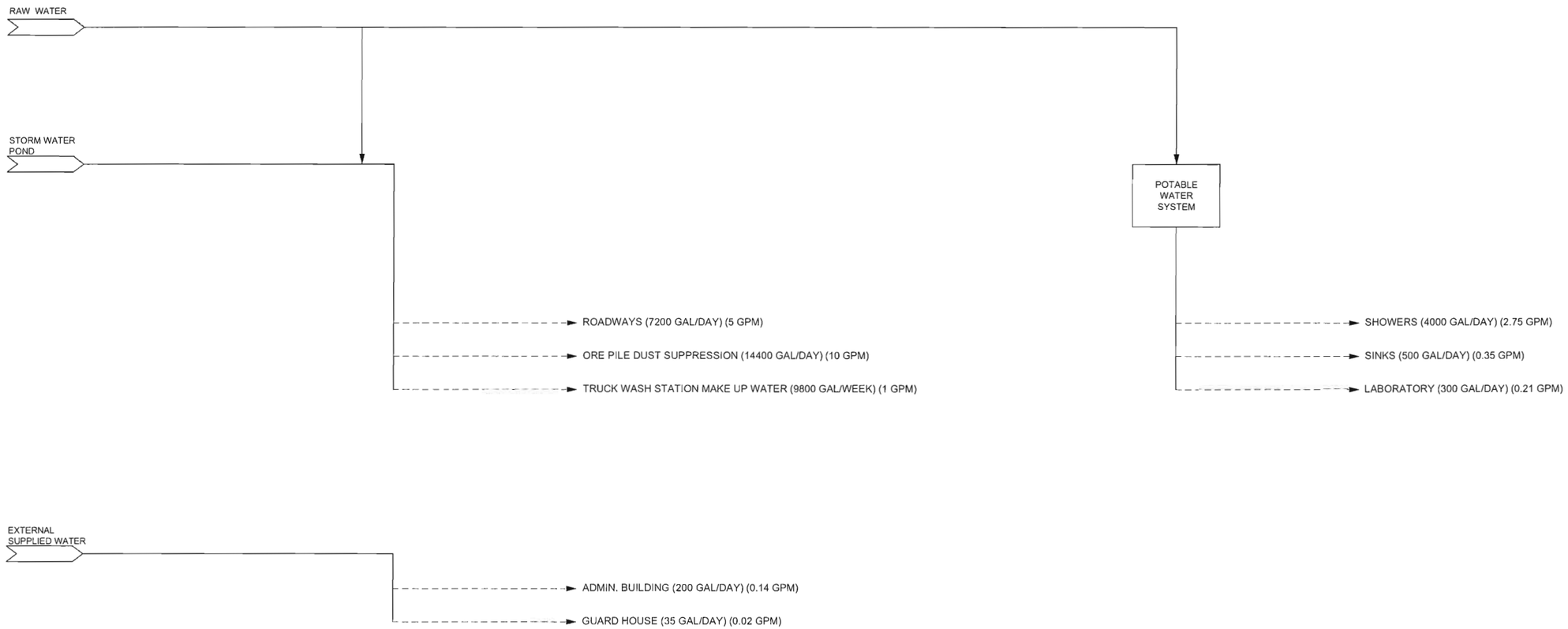

TOTAL INTERMITTENT FLOW USAGE PER DAY IS 19.5GPM

COLORADO REGISTERED PROFESSIONAL ENGINEER
DOUGLAS K. MAXWELL
26758

Nov 4, 2009

REV	DATE	DES	REVISION DESCRIPTION	CADD	CHK	RVW
A	05/01/08	CBB	ISSUED FOR INFORMATION	SJB	CBB	MDSB

ENERGY FUELS RESOURCES CORPORATION
PIÑON RIDGE PROJECT
MONTROSE COUNTY, COLORADO

PIÑON PROCESS PLANT
INTERMITTENT RAW WATER FLOWS

CH2MHILL

PROJECT No.		365541	FILE No.	–
DESIGN	CBB	06/08	SCALE NONE	REV. A
CADD	SJB	06/08	DRAWING	
CHECK	KJS	06/08	000-PF-003	
REVIEW	MDSB	06/08		

Plot Time:

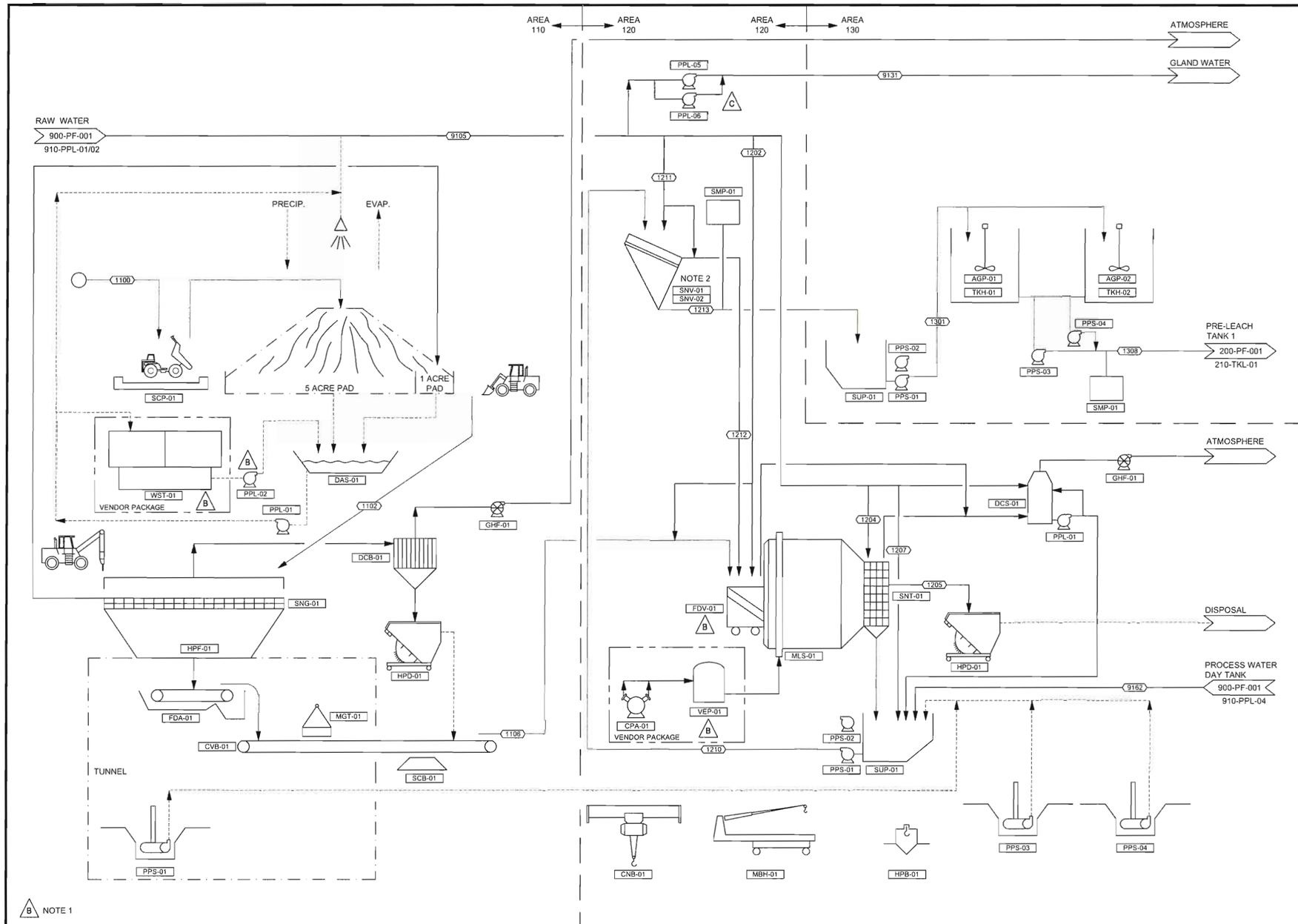

NOTE 1

STREAM	1100	1102	1106	1202	1204	1205	1207	1210	1211	1212	1213	1301	1308	9105	9131	9162
DESCRIPTION	TRUCKED ORE	ROM ORE	SAG MILL FEED	SAG MILL FEED WATER	TROMMEL SCREEN WATER	TROMMEL OVERSIZE	SAG MILL SUMP WATER	FEED TO CLASSIFYING SCREEN	CLASSIFYING SCREEN WATER	CLASSIFYING SCREEN OVERSIZE	CLASSIFYING SCREEN UNDERSIZE	PRE-LEACH STORAGE FEED	PRE-LEACH TANK 1 FEED	SAG GRINDING CIRCUIT	GLAND WATER SERVICE	SAG MILL SUMP PROCESS WATER
MASS DRY SOLIDS, STPH	63.8	63.8	63.8	-	-	0.1	-	127.3	-	63.7	63.7	63.7	42.0	-	-	-
MASS LIQUIDS, STPH	3.4	3.4	3.4	25.4	0.2	-	13.8	68.1	3.2	16.0	55.3	55.3	36.5	42.6	2.5	6.9
MASS TOTAL, STPH	67.2	67.2	67.2	25.4	0.2	0.2	13.8	195.5	3.2	79.7	118.9	118.9	78.5	42.6	2.5	6.9
VOL. FLOW RATE, GPM	-	-	-	101.4	0.6	-	55.2	449.7	12.8	154.1	308.4	308.4	203.4	170.0	10.0	24.4
%SOLIDS	95.0	95.0	95.0	-	-	80.0	-	65.2	-	79.9	53.5	53.5	53.5	-	-	-
S.G. SOLIDS	2.8	2.8	2.8	-	-	2.8	-	2.8	-	2.8	2.8	2.8	2.8	-	-	-
TEMPERATURE deg F	68.0	68.0	68.0	70.2	70.2	69.8	70.2	70.4	70.2	70.3	70.3	70.3	70.3	70.2	70.2	77.3
U, G/L	-	-	-	-	-	-	-	-	-	-	-	-	-	-	-	0.011
V, G/L	-	-	-	-	-	-	-	-	-	-	-	-	-	-	-	0.18
pH	-	-	-	-	-	-	-	-	-	-	-	-	-	-	-	-

ITEM	QTY	DESCRIPTION	HP
		AREA 110	
CVB-01	1	SAG MILL FEED CONVEYOR	20
DAS-01	1	STORM WATER POND	
DCB-01	1	DUST COLLECTING BAGHOUSE	
FDA-01	1	COARSE ORE APRON FEEDER	10
GHF-01	1	BAGHOUSE FAN	100
HPD-01	1	BAGHOUSE DISCHARGE HOPPER	
HPF-01	1	COARSE ORE FEED HOPPER	
MGT-01	1	TRAMP METAL BELT MAGNET	
PPL-01	1	STORM WATER PUMP	2
PPL-02	1	TRUCK WASH STATION SUMP PUMP	5
PPS-01	1	RECLAIM TUNNEL SUMP PUMP	7.5
SCB-01	1	SAG MILL FEED CONVEYOR SCALE	
SCP-01	1	TRUCK SCALE	
SNG-01	1	GRIZZLY SCREEN	
WST-01	1	TRUCK WASH STATION	50
		AREA 120	
CNB-01	1	SAG MILL BAY-SERVICE CRANE 25 / 5 TON	48
CPA-01	1	SAG MILL CLUTCH AIR COMPRESSOR	5
DCS-01	1	SAG MILL DUST SCRUBBER	
FDV-01	1	SAG MILL VIBRATING FEEDER	5
GHF-01	1	SAG MILL DUST SCRUBBER FAN	15
HPB-01	1	SAG MILL BALL HOPPER	
HPD-01	1	TROMMEL DISCHARGE HOPPER	
MBH-01	1	MILL LINER HANDLER	10
MLS-01	1	SAG MILL 14' DIA x 5' EGL	508
PPL-01	1	SAG MILL DUST SCRUBBER PUMP	10
PPL-05/06	2	GLAND WATER SERVICE PUMPS	5
PPS-01/02	2	SAG MILL DISCHARGE PUMPS 4" x 3"	60
PPS-03/04	2	SAG MILL AREA SUMP PUMPS	7.5
SMP-01	1	CLASSIFYING SCREEN U/SIZE SAMPLING SYSTEM	1
SNT-01	1	TROMMEL SCREEN	
SNV-01/02	2	SAG MILL CLASSIFYING SCREENS 28 MESH	5
SUP-01	1	SAG MILL DISCHARGE SUMP	
VEP-01	1	SAG MILL CLUTCH AIR RECEIVER	
		AREA 130	
AGP-01/02	2	PULP STORAGE TANKS 1 AND 2 AGITATORS	125
PPS-01/02	2	SAG MILL CLASSIFYING SCREEN U/SIZE PUMPS 6" x 6"	30
PPS-03/04	2	PRE-LEACH FEED PUMPS 6" x 6"	30
SMP-01	1	PRE-LEACH FEED SAMPLING SYSTEM	1
SUP-01	1	SAG MILL CLASIFYING SCREEN U/SIZE SUMP	
TKH-01/02	2	PULP STORAGE TANKS 1 AND 2 39' DIA x 39'	

NOTES:

1. MASS BALANCE HAS BEEN UPDATED FOR PROCESS CHANGES. MOST FLOW RATES HAVE CHANGED.
2. SAG MILL DISCHARGE TO SPLIT BETWEEN [illegible] SCREENS

COLORADO REGISTERED DOUGLAS K. MACKWELL 26758 PROFESSIONAL ENGINEER

Nov 4, 2009

REV	DATE	DES	REVISION DESCRIPTION	CADD	CHK	RVW
C	05/19/08	CBB	GENERAL UPDATE	SJB	KJS	MDSB
B	03/26/08	CBB	ISSUED FOR APPROVAL	SJB	KJS	MDSB
A	01/18/08	CBB	ISSUED FOR APPROVAL	SJB	DES	MDSB

ENERGY FUELS RESOURCES CORPORATION
PIÑON RIDGE PROJECT
MONTROSE COUNTY, COLORADO

AREA 100
ORE HANDLING AND GRINDING

PROCESS FLOW DIAGRAM

CH2MHILL

PROJECT No.		365541	FILE No.	–
DESIGN	CBB	12/07	SCALE NONE	REV. C
CADD	CJ	12/07	DRAWING	
CHECK	DES	01/08	100-PFD-001	
REVIEW	MDSB	01/08		

Plot Time:

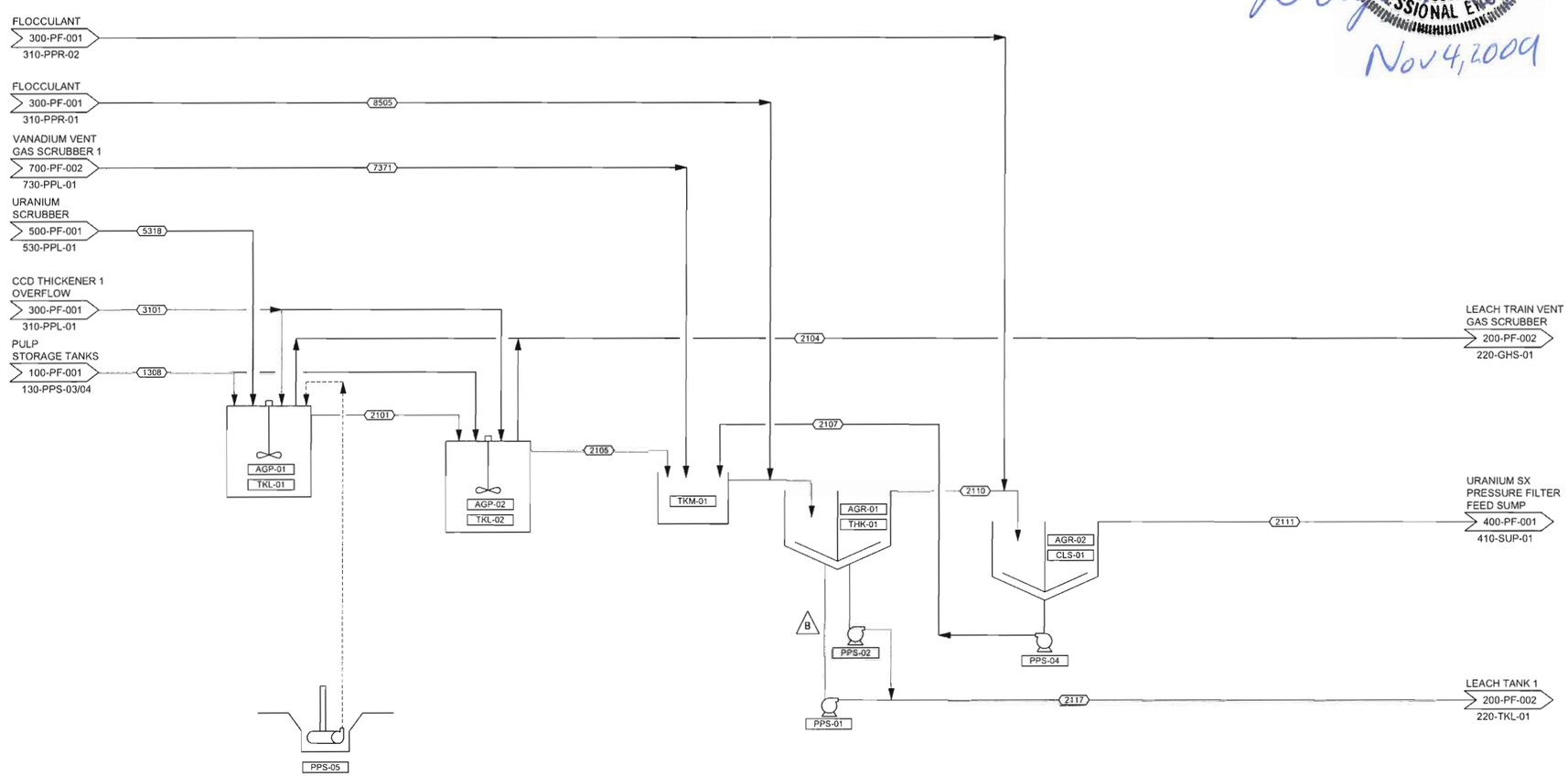

B NOTE 1

STREAM	1308	2101	2104	2105	2107	2110	2111	2117	3101	5318	7371	8505
DESCRIPTION	PRE-LEACH TANK 1 FEED	PRE-LEACH TANK 1 OVERFLOW	PRE-LEACH TANK 1 VENT GAS	PRE-LEACH TANK 2 OVERFLOW	CLARIFIER UNDERFLOW	PRE-LEACH THICKENER OVERFLOW	CLARIFIER OVERFLOW	LEACH TRAIN FEED	CCD THICKENER 1 OVERFLOW	URANIUM SCRUBBER AQUEOUS	VANADIUM SCRUBBER AQUEOUS	PRE-LEACH THICKENER FLOCCULANT
MASS DRY SOLIDS, STPH	42.0	42.7	-	43.2	0.02	0.03	0.007	43.2	0.02	-	0.002	-
MASS LIQUIDS, STPH	36.5	139.2	-	138.2	0.1	136.5	136.3	36.8	104.7	0.06	34.4	0.9
MASS TOTAL, STPH	78.5	182.0	2.0	181.4	0.1	136.5	136.3	80.0	104.7	0.06	34.4	0.9
VOL. FLOW RATE, GPM	203.4	576.9	-	575.2	0.3	505.7	504.6	199.8	377.7	0.2	127.8	3.4
%SOLIDS	53.5	23.5	-	23.8	20.0	-	-	54.0	-	-	-	-
S.G. SOLIDS	2.8	2.7	-	2.7	2.7	2.7	2.7	2.7	2.7	-	2.7	-
TEMPERATURE deg F	70.3	105.7	103.8	106.5	103.0	105.5	103.0	105.5	117.2	165.6	117.7	70.2
U, G/L	-	0.67	-	0.75	0.74	0.74	0.74	0.74	0.68	-	0.74	-
V, G/L	-	1.84	-	1.89	1.88	1.88	1.88	1.88	2.38	-	1.86	-
pH	-	0.6		1.0	1.0	1.0	1.0	1.0	0.2	-	-	-

COLORADO REGISTERED
DOUGLAS K. MAXWELL
26758
PROFESSIONAL ENGINEER

Nov 4, 2009

ITEM	QTY	DESCRIPTION	HP
		AREA 210	
AGP-01/02	2	PRE-LEACH TANKS 1 AND 2 AGITATORS	40
AGR-01	1	PRE-LEACH THICKENER RAKE	22
AGR-02	1	PRE-LEACH CLARIFIER RAKE	12
CLS-01	1	PRE-LEACH CLARIFIER 50' DIA x 12'	
PPS-01/02	2	PRE-LEACH THICKENER UNDERFLOW PUMPS 6" x 6"	25
PPS-04	1	CLARIFIER UNDERFLOW PUMP	1
PPS-05	1	PRE-LEACH AREA SUMP PUMP	7.5
THK-01	1	PRE-LEACH THICKENER 60' DIA x 12'	
TKL-01/02	2	PRE-LEACH TANKS 1 AND 2 21' DIA x 24'	
TKM-01	1	PRE-LEACH THICKENER FEED BOX	

NOTES:

1. MASS BALANCE HAS BEEN UPDATED FOR PROCESS CHANGES. MOST FLOW RATES HAVE CHANGED.

REV	DATE	DES	REVISION DESCRIPTION	CADD	CHK	RVW
3	05/19/08	CBB	GENERAL UPDATE	SJB	KJS	MDSB
2	03/26/08	CBB	ISSUED FOR APPROVAL	SJB	KJS	MDSB
1	01/18/08	CBB	ISSUED FOR APPROVAL	SJB	DES	MDSB

ENERGY FUELS RESOURCES CORPORATION
PIÑON RIDGE PROJECT
MONTROSE COUNTY, COLORADO

AREA 200
PRE-LEACH

PROCESS FLOW DIAGRAM

CH2MHILL

PROJECT No.		365541	FILE No.		-
DESIGN	CBB	12/07	SCALE NONE	REV.	C
CADD	CJ	12/07	DRAWING		
CHECK	DES	01/08	200-PF-001		
REVIEW	MDSB	01/08			

Plot Time:

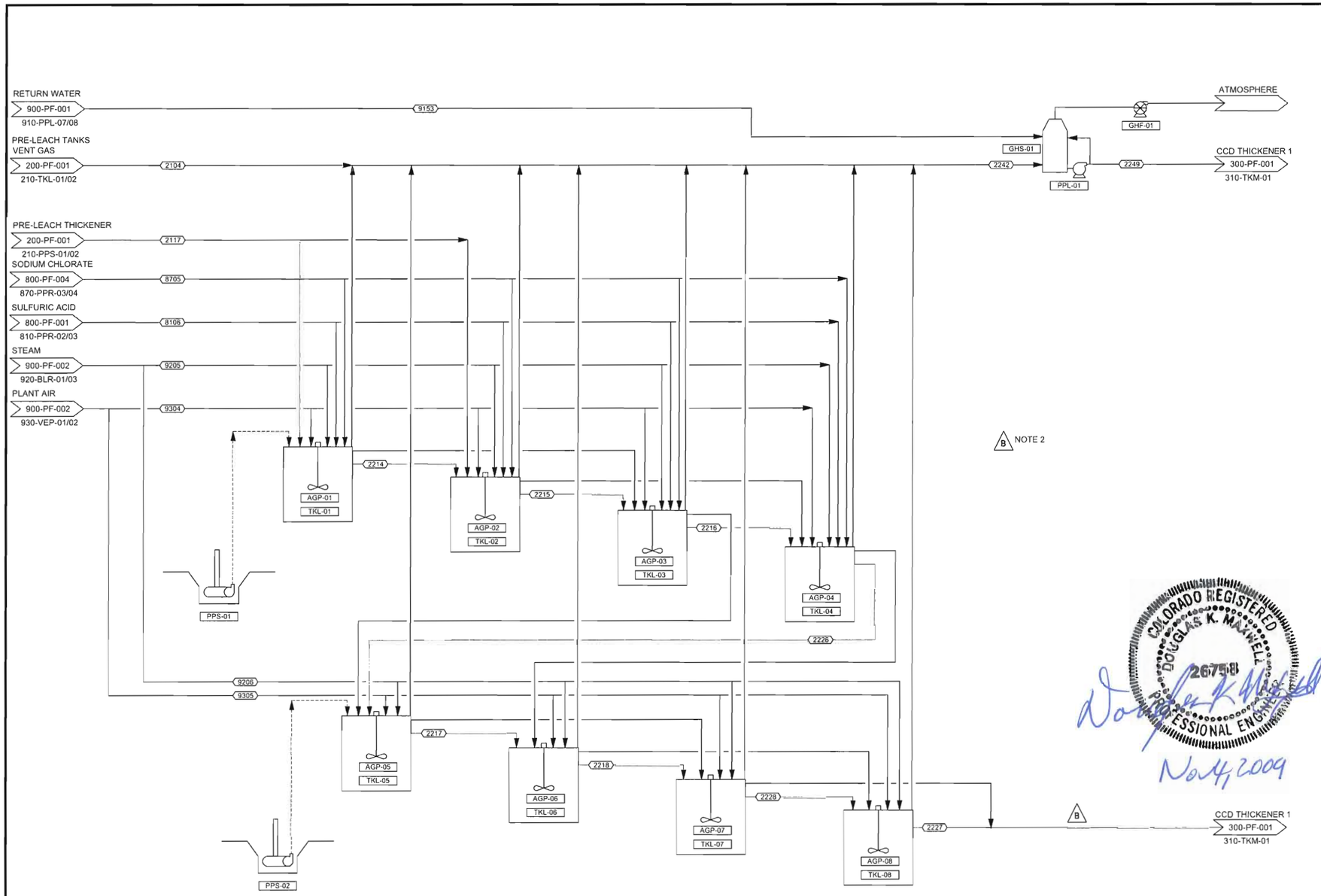

NOTE 1

STREAM	2104	2117	2214	2215	2216	2217	2218	2226	2227	2228	2242	2249	8106	8705	9205	9206	9153	9304	9305
DESCRIPTION	PRE-LEACH TANKS VENT GAS	LEACH TRAIN FEED	LEACH TANK 1 OVERFLOW	LEACH TANK 2 OVERFLOW	LEACH TANK 3 OVERFLOW	LEACH TANK 5 OVERFLOW	LEACH TANK 6 OVERFLOW	LEACH TANK 4 OVERFLOW	LEACH TANK 8 OVERFLOW	LEACH TANK 7 OVERFLOW	PRE-LEACH THICKENER TRAN VENT GAS	LEACH TRAIN SCRUBBER SOLUTION	SULFURIC ACID	SODIUM CHLORATE TANKS 1-4	STEAM TANKS 1-4	STEAM TANKS 5-8	LEACH VENT SCRUBBER WATER	AIR TANKS 1-4	AIR TANKS 5-8
MASS DRY SOLIDS, STPH	-	43.2	43.5	43.7	43.7	43.8	43.8	43.8	43.8	43.8	-	-	-	-	-	-	-	-	-
MASS LIQUIDS, STPH	-	36.8	43.0	43.2	43.6	43.7	43.7	43.9	43.6	43.6	-	0.6	7.3	0.3	-	-	0.5	-	-
MASS TOTAL, STPH	2.0	80.0	86.5	86.9	87.3	87.5	87.4	87.6	87.4	87.4	7.2	0.6	7.3	0.3	2.9	2.1	0.5	0.02	0.02
VOL. FLOW RATE, GPM	-	199.8	218.1	218.1	218.4	218.3	218.2	219.0	218.0	218.1	-	2.3	15.9	-	-	-	1.8	-	-
%SOLIDS	-	54.0	50.3	50.3	50.1	50.0	50.1	49.9	50.1	50.1	-	-	-	-	-	-	-	-	-
S.G. SOLIDS	-	2.7	2.7	2.7	2.7	2.7	2.7	2.7	2.7	2.7	-	-	-	-	-	-	-	-	-
TEMPERATURE deg F	103.8	105.5	185.0	185.0	185.0	185.0	185.0	185.0	185.0	185.0	170.1	144.0	68.0	68.0	332.6	332.6	68.0	104.0	104.0
U, G/L	-	0.74	1.13	1.37	1.51	1.62	1.64	1.56	1.67	1.66	-	0.003	-	-	-	-	-	-	-
V, G/L	-	1.88	3.64	4.57	5.11	5.62	5.73	5.39	5.86	5.82	-	0.02	-	-	-	-	-	-	-
pH	-	1.0	-0.2	-0.2	-0.2	-0.3	-0.2	-0.2	-0.2	-0.2	-	3.5	-1.5	-	-	-	-	-	-

ITEM	QTY	DESCRIPTION	HP
		AREA 220	
AGP-01/08	8	LEACH TANKS 1-8 AGITATORS	40
GHF-01	1	LEACH TRAIN VENT GAS SCRUBBER FAN	20
GHS-01	1	LEACH TRAIN VENT GAS SCRUBBER	
PPL-01	1	LEACH TRAIN VENT GAS SCRUBBER PUMP	10
PPS-01/02	2	LEACH TRAIN AREA SUMP PUMPS 1 AND 2	7.5
TKL-01/08	8	LEACH TANKS 1-8 21' DIA x 24'	

NOTES:

1. MASS BALANCE HAS BEEN UPDATED FOR PROCESS CHANGES. MOST FLOW RATES HAVE CHANGED.
2. CHANGED FROM 2 LEACH TRAINS OF 5 TANKS EACH TO 1 TRAIN OF 8 TANKS. REDUCED TO 1 SCRUBBER.

COLORADO REGISTERED PROFESSIONAL ENGINEER DOUGLAS K. MAXWELL 26758

Nov 4, 2009

REV	DATE	DES	REVISION DESCRIPTION	CADD	CHK	RVW
C	05/19/08	CBB	GENERAL UPDATE	SJB	KJS	MDSB
B	03/26/08	CBB	ISSUED FOR APPROVAL	SJB	KJS	MDSB
A	01/16/08	CBB	ISSUED FOR APPROVAL	SJB	DES	MDSB

ENERGY FUELS RESOURCES CORPORATION
PIÑON RIDGE PROJECT
MONTROSE COUNTY, COLORADO

AREA 200
LEACH TRAIN

PROCESS FLOW DIAGRAM

CH2MHILL

PROJECT No.		365541	FILE No.	–
DESIGN	CBB	12/07	SCALE NONE	REV. C
CADD	CJ	12/07	DRAWING	
CHECK	DES	01/08	200-PF-002	
REVIEW	MDSB	01/08		

Plot Time:

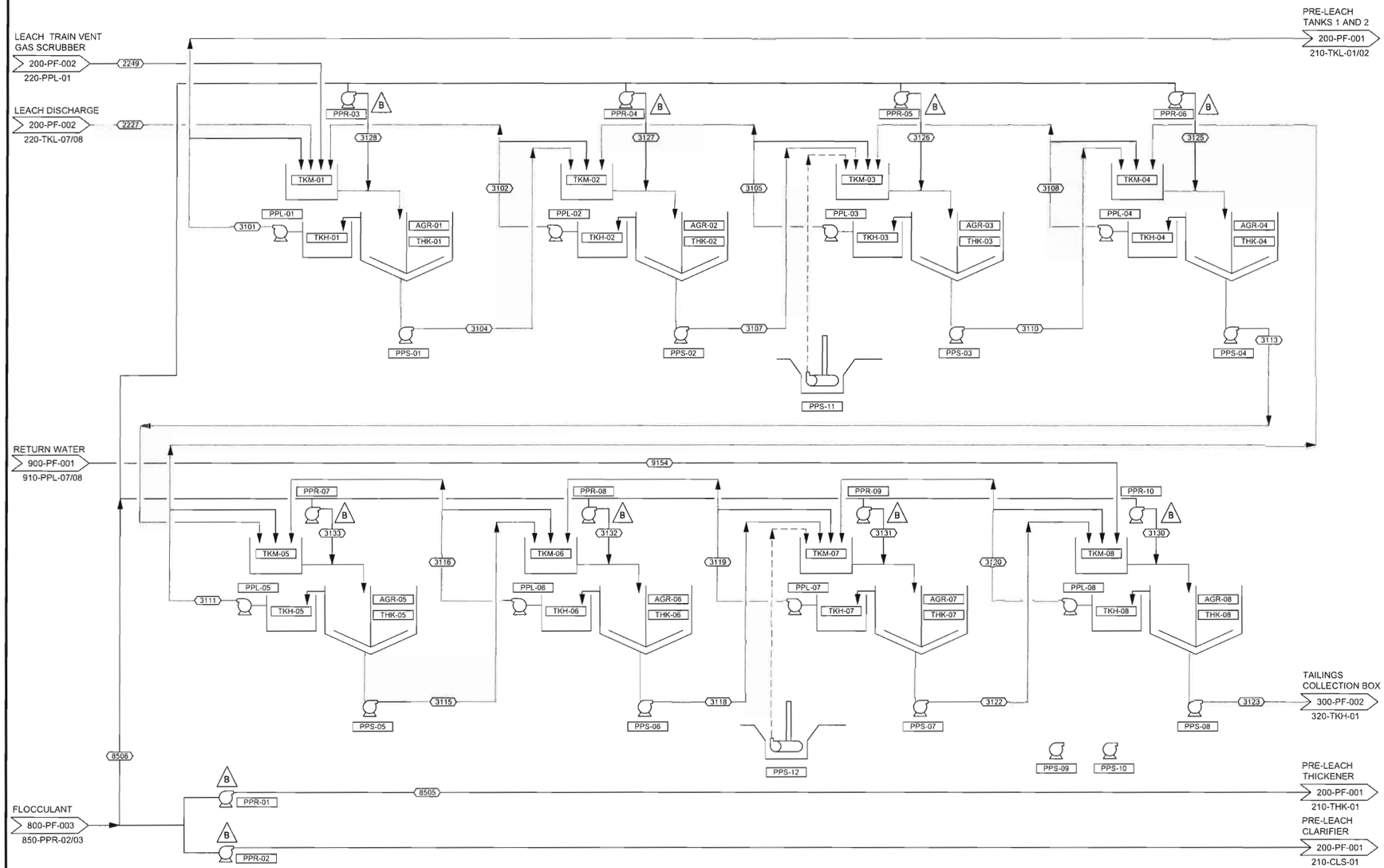

ITEM	QTY	DESCRIPTION	HP
		AREA 310	
AGR-01/08	8	CCD THICKENER 1 - 8 RAKES	22
PPL-01/08	8	CCD THICKENER 1 - 8 OVERFLOW PUMPS 6" x 4"	25
PPR-01	1	PRE-LEACH THICKENER FLOC. METERING PUMP	0.5
PPR-02	1	PRE LEACH CLARIFIER FLOC. METERING PUMP	0.5
PPR-03/10	8	CCD THICKENER 1-8 FLOC. METERING PUMP	0.5
PPS-01/10	10	CCD THICKENER 1 - 8 UNDERFLOW PUMPS 6" x 6"	40
PPS-11/12	2	CCD AREA SUMP PUMPS	7.5
THK-01/08	8	CCD THICKENERS 1 - 8 40' DIA x 10'	
TKH-01/08	8	CCD THICKENER 1 - 8 OVERFLOW PIPES	
TKM-01/08	8	CCD THICKENER 1 - 8 FEED BOXES	

NOTES:

1. MASS BALANCE HAS BEEN UPDATED FOR PROCESS CHANGES. MOST FLOW RATES HAVE CHANGED.

COLORADO REGISTERED PROFESSIONAL DOUGLAS K. MAXWELL 26758

Nov 4, 2009

NOTE 1

STREAM	2227	2249	3101	3102	3104	3105	3107	3108	3110	3111	3113	3115	3116	3118	3119	3120	3122	3123	3125	3126	3127	3128	3130	3131	3132	3133	8505	8506	9154
DESCRIPTION	LEACH TANK 8 OVERFLOW	LEACH TRAIN SCRUBBER AQUEOUS	CCD 1 OVERFLOW	CCD 2 OVERFLOW	CCD 3 OVERFLOW	CCD 3 OVERFLOW	CCD 3 UNDERFLOW	CCD 4 OVERFLOW	CCD 3 UNDERFLOW	CCD 5 OVERFLOW	CCD 4 UNDERFLOW	CCD 5 UNDERFLOW	CCD 6 OVERFLOW	CCD 6 UNDERFLOW	CCD 7 OVERFLOW	CCD 8 OVERFLOW	CCD 7 UNDERFLOW	CCD 8 UNDERFLOW	CCD 4 FLOCCULANT	CCD 3 FLOCCULANT	CCD 2 FLOCCULANT	CCD 1 FLOCCULANT	CCD 8 FLOCCULANT	CCD 7 FLOCCULANT	CCD 6 FLOCCULANT	CCD 5 FLOCCULANT	PRE-LEACH THICKENER FLOCCULANT	CCD THICKENERS FLOCCULANT	CCD THICKENER 48 WATER
MASS DRY SOLIDS, STPH	43.8	-	0.02	0.02	43.8	0.02	43.7	0.02	43.7	0.02	43.6	43.7	0.02	43.6	0.02	0.02	43.6	43.6	-	-	-	-	-	-	-	-	-	0.02	-
MASS LIQUIDS, STPH	43.6	0.6	104.7	103.6	43.8	102.8	43.7	102.3	43.7	101.7	43.6	43.7	101.4	43.6	101.0	100.8	43.6	43.6	0.5	0.6	0.7	0.9	0.2	0.2	0.3	0.3	0.9	3.5	100.7
MASS TOTAL, STPH	87.4	0.6	104.7	103.6	87.6	102.8	87.4	102.3	87.5	101.7	87.3	87.3	101.4	87.2	101.0	100.8	87.2	87.1	0.5	0.6	0.7	0.9	0.2	0.2	0.3	0.4	0.9	3.5	100.7
VOL. FLOW RATE, GPM	218.0	2.3	377.7	379.3	223.6	378.5	224.9	377.4	225.9	375.8	226.0	226.2	374.7	225.9	373.5	373.0	226.0	225.9	1.8	2.2	2.7	3.5	0.6	0.7	1.1	1.4	3.4	14.0	372.4
%SOLIDS	50.1	-	-	-	50.0	-	50.0	-	50.0	-	50.0	50.0	-	50.0	-	-	50.0	50.0	-	-	-	-	-	-	-	-	-	-	-
S.G. SOLIDS	2.7	-	2.7	2.7	2.7	2.7	2.7	2.7	2.7	2.7	2.7	2.7	2.7	2.7	2.7	2.7	2.7	2.7	-	-	-	-	-	-	-	-	-	-	-
TEMPERATURE deg F	185.0	144.0	117.2	88.0	117.2	75.2	88.0	69.7	75.2	67.6	69.7	67.6	67.0	67.0	67.1	67.5	67.1	67.5	70.2	70.2	70.2	70.2	70.2	70.2	70.2	70.2	70.2	70.2	68.0
U, G/L	1.67	0.003	0.68	0.26	0.63	0.12	0.29	0.06	0.14	0.03	0.06	0.03	0.02	0.02	0.01	0.01	0.01	0.01	-	-	-	-	-	-	-	-	-	-	-
V, G/L	5.86	0.02	2.38	0.93	2.21	0.44	1.02	0.22	0.48	0.11	0.24	0.12	0.06	0.07	0.04	0.03	0.04	0.03	-	-	-	-	-	-	-	-	-	-	-
pH	-0.2	3.5	0.2	0.7	0.2	1.0	0.6	1.4	1.0	1.8	1.4	1.8	2.2	2.1	2.5	2.9	2.5	3.0	-	-	-	-	-	-	-	-	-	-	-

REV	DATE	DES	REVISION DESCRIPTION	CADD	CHK	RVW
C	05/19/08	CBB	GENERAL UPDATE	SJB	KJS	MDSB
B	03/26/08	CBB	ISSUED FOR APPROVAL	SJB	KJS	MDSB
A	01/18/08	CBB	ISSUED FOR APPROVAL	SJB	DES	MDSB

ENERGY FUELS RESOURCES CORPORATION
PIÑON RIDGE PROJECT
MONTROSE COUNTY, COLORADO

AREA 300
CCD THICKENERS

PROCESS FLOW DIAGRAM

CH2MHILL

PROJECT No.		365541	FILE No.		–
DESIGN	CBB	12/07	SCALE	NONE	REV. C
CADD	CJ	12/07	DRAWING		
CHECK	DES	01/08	300-PF-001		
REVIEW	MDSB	01/08			

Plot Time:

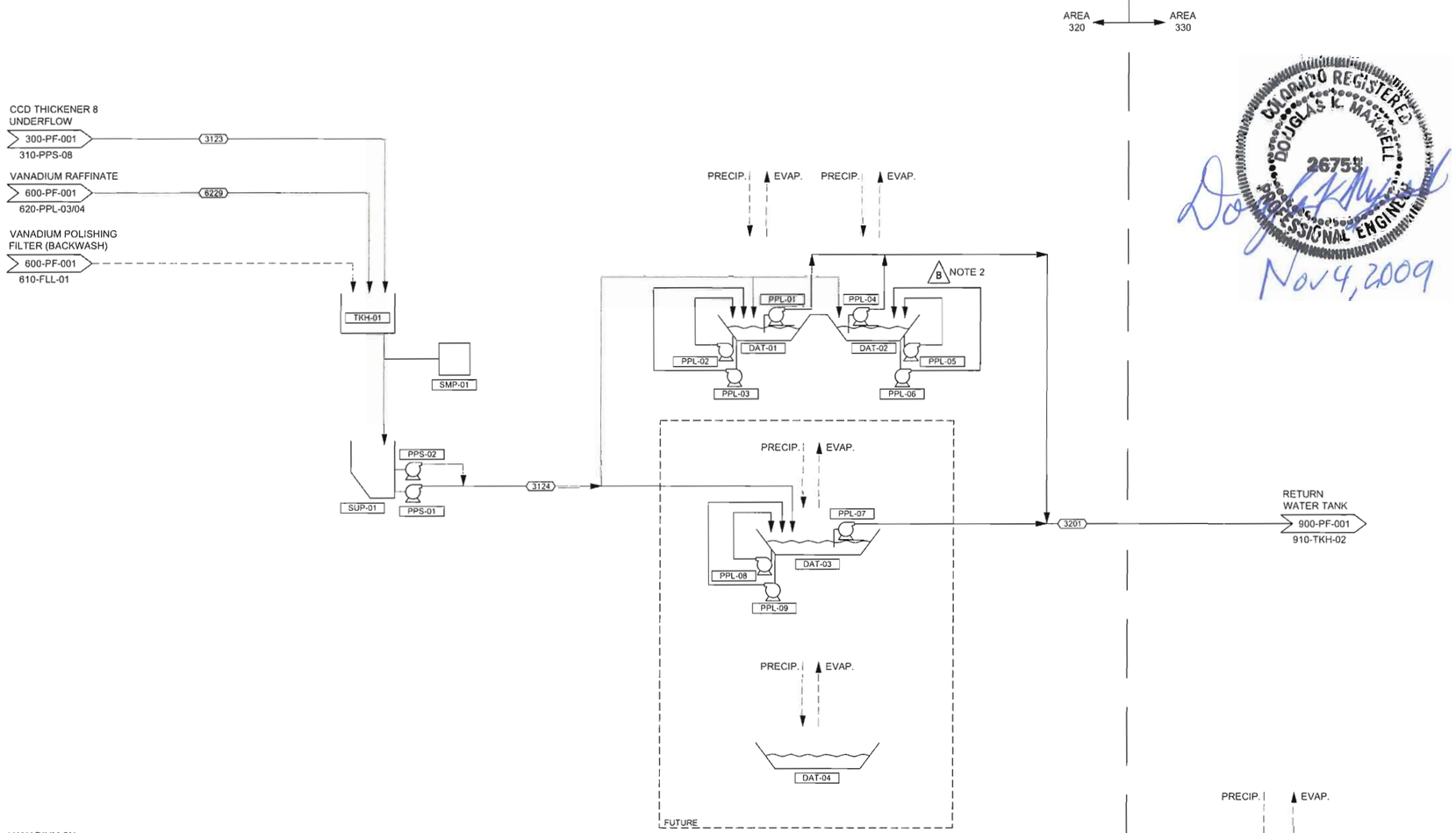

NOTE 1

STREAM	3123	3124	3201	6229	6230
DESCRIPTION	CCD 8 UNDERFLOW	FINAL TAILINGS STREAM	RETURN WATER FROM TAILINGS	VANADIUM RAFFINATE (RETURN)	VANADIUM RAFFINATE
MASS DRY SOLIDS, STPH	43.6	43.6	-	-	-
MASS LIQUIDS, STPH	43.6	118.0	101.1	74.5	28.8
MASS TOTAL, STPH	87.1	161.6	101.1	74.5	28.8
VOL. FLOW RATE, GPM	225.9	502.6	374.2	277.0	107.1
%SOLIDS	50.0	27.0	-	-	-
S.G. SOLIDS	2.7	2.7	-	-	-
TEMPERATURE deg F	67.5	88.1	68.0	102.5	102.5
U. G/L	0.01	0.004	0.004	0.004	0.004
V. G/L	0.03	0.02	0.02	0.02	0.02
pH	3.0	3.4	3.4	4.44	4.44

ITEM	QTY	DESCRIPTION	HP
		AREA 320	
DAT-01	1	TAILINGS CELL A1	
DAT-02	1	TAILINGS CELL A2	
DAT-03	1	TAILINGS CELL B	
DAT-04	1	TAILINGS CELL C	
PPL-01	1	TAILING CELL A1 BARGE PUMP 4" x 3"	40
PPL-02	1	TAILING CELL A1 DRAINAGE PUMP	10
PPL-03	1	TAILING CELL A1 LEAK DETECTION PUMP	1
PPL-04	1	TAILING CELL A2 BARGE PUMP 4" x 3"	40
PPL-05	1	TAILING CELL A2 DRAINAGE PUMP	10
PPL-06	1	TAILING CELL A2 LEAK DETECTION PUMP	1
PPL-07	1	TAILING CELL B BARGE PUMP 4" x 3"	40
PPL-08	1	TAILING CELL B DRAINAGE PUMP	10
PPL-09	1	TAILING CELL B LEAK DETECTION PUMP	1
PPS-01/02	2	TAILINGS PUMPS 6" x 4"	10
SMP-01	1	TAILINGS SAMPLING SYSTEM	1
SUP-01	1	TAILINGS SUMP	
TKH-01	1	TAILINGS COLLECTION BOX	
		AREA 330	
DAW-01	1	EVAPORATION POND	
PPL-01	1	EVAPORATION POND BARGE PUMP	20
PPL-02	1	EVAPORATION POND LEAK DETECTION PUMP	10

NOTES:

1. MASS BALANCE HAS BEEN UPDATED FOR PROCESS CHANGES. MOST FLOW RATES HAVE CHANGED.
2. TAILING CELL AND PUMP BACK SYSTEM DESIGN CHANGED.

COLORADO REGISTERED DOUGLAS K. MAXWELL 26758 PROFESSIONAL ENGINEER
Nov 4, 2009

REV	DATE	DES	REVISION DESCRIPTION	CADD	CHK	RVW
C	05/19/08	CBB	GENERAL UPDATE	SJB	KJS	MDSB
B	03/26/08	CBB	ISSUED FOR APPROVAL	SJB	KJS	MDSB
A	01/18/08	CBB	ISSUED FOR APPROVAL	SJB	DES	MDSB

ENERGY FUELS RESOURCES CORPORATION
PIÑON RIDGE PROJECT
MONTROSE COUNTY, COLORADO

AREA 300
TAILINGS AREA

PROCESS FLOW DIAGRAM

CH2MHILL

PROJECT No.		365541	FILE No.	–
DESIGN	CBB	12/07	SCALE NONE	REV. C
CADD	CJ	12/07	DRAWING	
CHECK	DES	01/08	300-PF-002	
REVIEW	MDSB	01/08		

Plot Time:

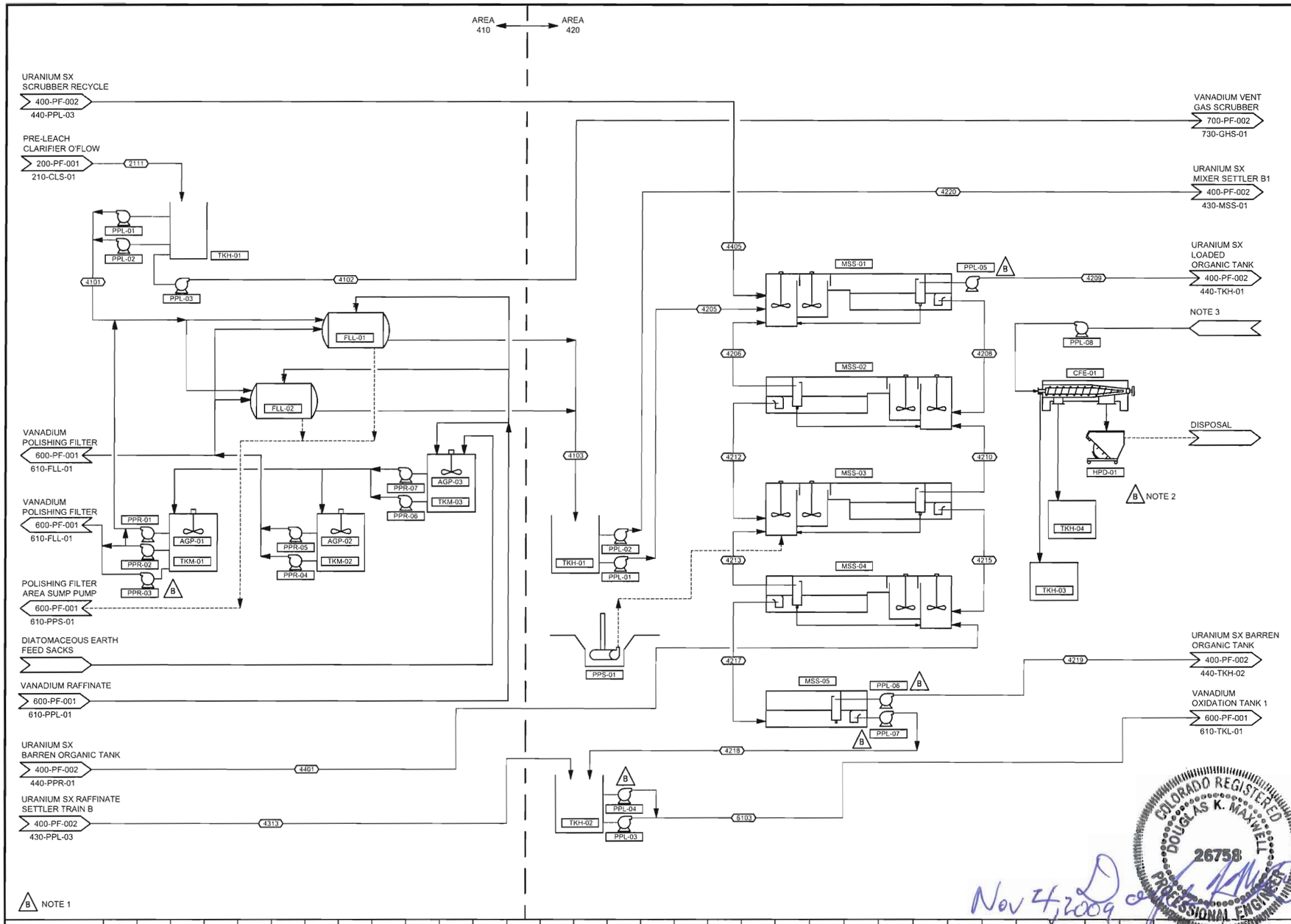

ITEM	QTY	DESCRIPTION	HP
		AREA 410	
AGP-01	1	BODY FEED TANK AGITATOR	2
AGP-02	1	PRECOAT TANK AGITATOR	2
AGP-03	1	DE-PREPARATION TANK AGITATOR	2
FLL-01/02	2	URANIUM POLISHING FILTERS 1 AND 2	0.75
PPL-01/02	2	URANIUM POLISHING FILTER FEED PUMPS 6" x 4"	15
PPL-03	1	VANADIUM VENT GAS SCRUBBER FEED PUMP 3" x 2"	3
PPR-01/03	3	BODY FEED TANK PUMPS	2
PPR-04/05	2	PRECOAT TANK PUMPS	10
PPR-06/07	2	DE-PREPARATION TANK PUMPS	1
TKH-01	1	CLARIFIER OVERFLOW PIPE	
TKM-01	1	BODY FEED TANK	
TKM-02	1	PRECOAT TANK	
TKM-03	1	DE-PREPARATION TANK	
		AREA 420	
CFE-01	1	CRUD CENTRIFUGE	40
HPD-01	1	CRUD SOLIDS DISPOSAL HOPPER	
MSS-01/04	4	URANIUM SX MIXER SETTLERS A1 - A4 20' L x 10.5' W	8
MSS-05	1	URANIUM SX RAFFINATE SETTLER A 20' L x 10.5' W	
PPL-01/02	2	URANIUM SX FEED PUMPS 3" x 2"	10
PPL-03/04	2	URANIUM RAFFINATE PUMPS 6" x 4"	20
PPL-05	1	URANIUM SX MIXER SETTLER A1 ORGANIC PUMP	2
PPL-06	1	URANIUM SX RAFF. SETTLER A ORGANIC PUMP	0.75
PPL-07	1	URANIUM SX RAFF. SETTLER A AQUEOUS PUMP	5
PPL-08	1	CRUD CENTRIFUGE FEED PUMP	1
PPS-01	1	URANIUM SX EXTRACTION AREA SUMP PUMP	7.5
TKH-01	1	URANIUM SX FEED TANK 26' DIA x 20'	
TKH-02	1	URANIUM SX RAFFINATE TANK 18' DIA x 18'	
TKH-03	1	CRUD AQUEOUS TANK	
TKH-04	1	CRUD ORGANIC TANK	

NOTES:

1. MASS BALANCE HAS BEEN UPDATED FOR PROCESS CHANGES. MOST FLOW RATES HAVE CHANGED.
2. CRUD HANDLING SYSTEM ADDED.
3. CRUD CENTRIFUGE FEED PUMP CAN BE HOOKED UP TO ANY MIXER SETTLER IN THE URANIUM CIRCUIT OR THE VANADIUM CIRCUIT FOR CRUD REMOVAL.

STREAM	2111	4101	4102	4103	4205	4206	4208	4209	4210	4212	4213	4215	4217	4218	4219	4220	4313	4401	4405	6103
DESCRIPTION	CLARIFIER OVERFLOW (PPR)	URANIUM FILTER FEED	VANADIUM VENT GAS SCRUBBER FEED	URANIUM FILTER DISCHARGE	URANIUM SX A1 FEED	URANIUM SX A2 ORGANIC	URANIUM SX A1 AQUEOUS	URANIUM SX A1 ORGANIC	URANIUM SX A3 ORGANIC	URANIUM SX A2 AQUEOUS	URANIUM A4 ORGANIC	URANIUM SX A3 AQUEOUS	URANIUM SX A4 AQUEOUS	URANIUM RAFFINATE AQUEOUS	URANIUM RAFFINATE ORGANIC	URANIUM SX B1 FEED	URANIUM SX RAFFINATE AQUEOUS	BARREN ORGANIC FEED	URANIUM SX SCRUBBER AQUEOUS	VANADIUM OXIDATION FEED
MASS DRY SOLIDS, lb/hr	0.007	10.2	3.4	-	-	-	-	-	-	-	-	-	-	-	-	-	-	-	-	-
MASS LIQUIDS, lb/hr	136.3	204458.4	68152.8	204469.7	102164.9	3.0	102596.7	3.0	3.0	102580.0	3.0	102575.0	102486.4	102486.4	0.003	102164.9	101999.0	3.0	487.5	204427.5
MASS TOTAL, lb/hr	136.3	204474.7	68158.2	204475.8	102164.9	29860.3	102627.5	29885.3	29843.6	102610.8	29838.6	102605.8	102517.2	102491.6	25.6	102171.0	102004.2	29750.0	487.6	204494.8
VOL. FLOW RATE, GPM	504.6	378.4	126.1	378.4	189.0	79.7	190.3	79.7	79.7	190.3	79.7	190.3	190.0	189.9	0.07	189.0	188.9	79.5	1.0	378.6
%SOLIDS	-	-	-	-	-	-	-	-	-	-	-	-	-	-	-	-	-	-	-	-
S.G. SOLIDS	2.7	2.7	2.7	-	-	-	-	-	-	-	-	-	-	-	-	-	-	-	-	-
TEMPERATURE deg F	103.0	103.0	103.0	103.0	101.6	105.3	104.9	104.9	104.2	105.3	98.1	104.2	98.1	97.6	97.6	101.6	97.6	101.1	100.6	97.0
U, G/L	0.74	0.74	0.74	0.74	0.75	0.53	0.22	1.76	0.16	0.07	0.04	0.02	0.004	0.004	0.04	0.75	0.004	-	0.003	0.004
V, G/L	1.88	1.88	1.88	1.88	1.88	0.04	1.87	0.04	0.04	1.87	0.04	1.87	1.87	1.87	0.04	1.88	1.88	-	0.02	1.88
pH	1.0	1.0	1.0	1.0	1.0	-	1.0	-	-	1.0	-	1.0	1.1	1.1	-	1.0	1.1	-	1.8	1.1

Nov 4, 2009

COLORADO REGISTERED PROFESSIONAL ENGINEER DOUGLAS K. MAXWELL 26758

REV	DATE	DES	REVISION DESCRIPTION	CADD	CHK	RVW
C	05/19/08	CBB	GENERAL UPDATE	SJB	KJS	MDSB
B	03/26/08	CBB	ISSUED FOR APPROVAL	SJB	KJS	MDSB
A	01/18/08	CBB	ISSUED FOR APPROVAL	SJB	DES	MDSB

ENERGY FUELS RESOURCES CORPORATION
PIÑON RIDGE PROJECT
MONTROSE COUNTY, COLORADO

AREA 400
URANIUM SX - FEED SYSTEM
AND EXTRACTION TRAIN A
PROCESS FLOW DIAGRAM

CH2MHILL

PROJECT No.		365541	FILE No.		–
DESIGN	CBB	12/07	SCALE	NONE	REV. C
CADD	CJ	12/07	DRAWING		
CHECK	DES	01/08	400-PF-001		
REVIEW	MDSB	01/08			

Plot Time: 11/04/09 11:08

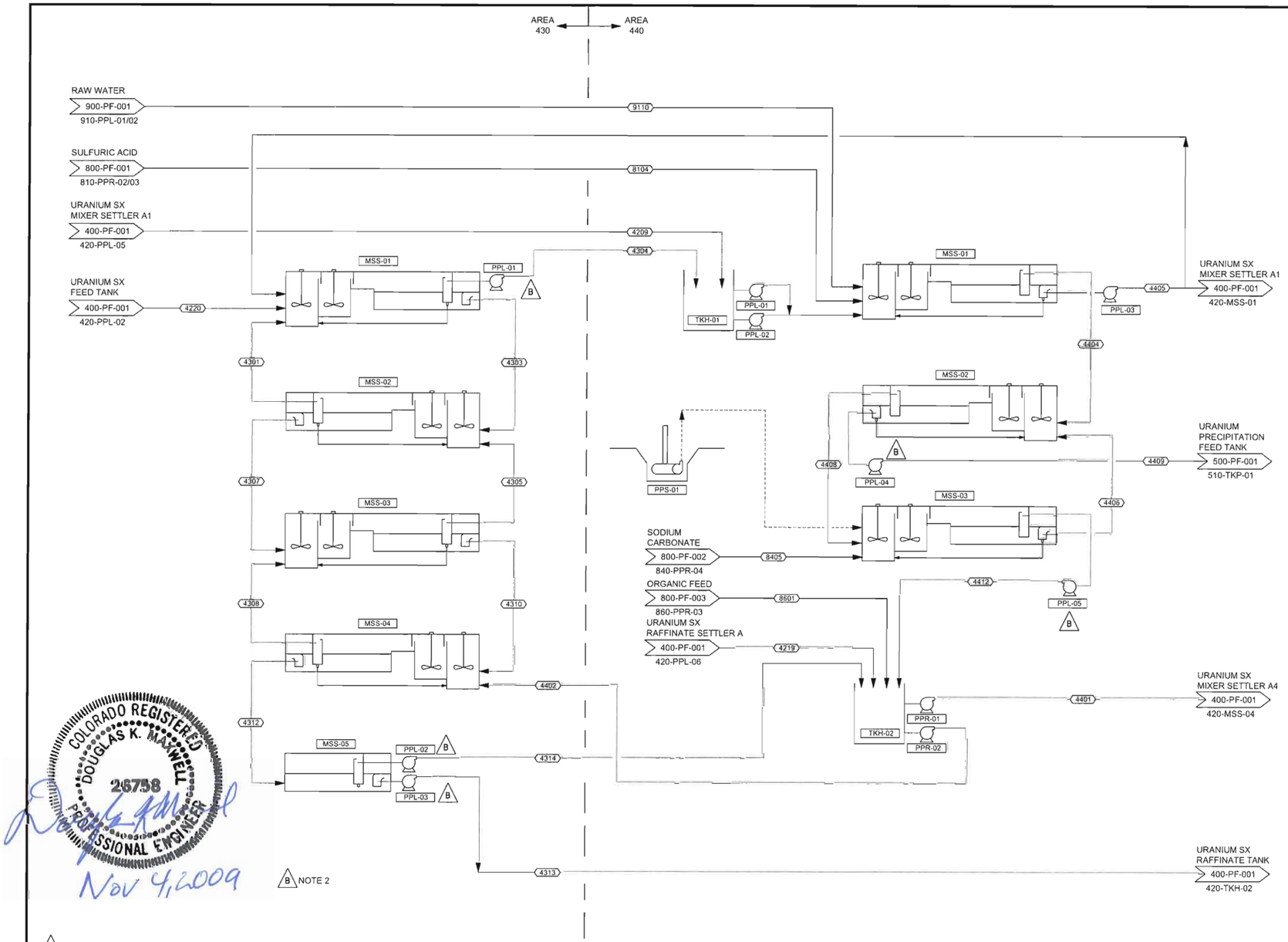

ITEM	QTY	DESCRIPTION	HP
		AREA 430	
MSS-01/04	4	URANIUM SX MIXER SETTLERS B1 -B4 20' L x 10.5' W	8
MSS-05	1	URANIUM SX RAFFINATE SETTLER B 20' L x 10.5' W	
PPL-01	1	URANIUM SX MIXER SETTLER B1 ORGANIC PUMP	2
PPL-02	1	URANIUM SX RAFF. SETTLER B ORGANIC PUMP	0.75
PPL-03	1	URANIUM SX RAFF. SETTLER B AQUEOUS PUMP	5
		AREA 440	
MSS-01	1	URANIUM SX SCRUBBER MIXER SETTLER 15' L x 7.5' W	8
MSS-02/03	2	URANIUM SX STRIPPER MIXER SETTLERS 1 & 2 15' L x 7.5' W	8
PPL-01/02	2	URANIUM SX LOADED ORGANIC PUMPS 4" x 3"	2
PPL-03	1	URANIUM SX SCRUBBER AQUEOUS PUMP	1.5
PPL-04	1	URANIUM STRIPPED LIQUOR PUMP	0.75
PPL-05	1	URANIUM ORGANIC RECYCLE PUMP	7.5
PPR-01/02	2	URANIUM SX BARREN ORGANIC PUMPS 3" X 2"	2
PPS-01	1	URANIUM SX STRIPPING AREA SUMP PUMP	7.5
TKH-01	1	URANIUM SX LOADED ORGANIC TANK 24' DIA x 19'	
TKH-02	1	URANIUM SX BARREN ORGANIC TANK 24' DIA x 19'	

NOTES:

1. MASS BALANCE HAS BEEN UPDATED FOR PROCESS CHANGES. MOST FLOW RATES HAVE CHANGED.
2. MOVED URANIUM SX RAFFINATE TANK TO AREA 420.

STREAM	4209	4219	4220	4301	4303	4304	4305	4307	4308	4310	4312	4313	4314	4401	4402	4404	4405	4406	4408	4409	4412	8104	8405	8601	9110
DESCRIPTION	URANIUM SX B1 ORGANIC	URANIUM RAFFINATE ORGANIC	URANIUM SX B1 FEED	URANIUM SX B2 ORGANIC	URANIUM SX B1 AQUEOUS	URANIUM SX B1 ORGANIC	URANIUM SX B3 ORGANIC	URANIUM SX B2 AQUEOUS	URANIUM SX B3 ORGANIC	URANIUM SX B3 AQUEOUS	URANIUM SX B4 AQUEOUS	URANIUM SX RAFFINATE AQUEOUS	URANIUM RAFFINATE ORGANIC (B)	BARREN ORGANIC FEED A4	BARREN ORGANIC FEED B4	URANIUM SX SCRUBBER ORGANIC	URANIUM SX SCRUBBER AQUEOUS	URANIUM SX STRIPPER 2 AQUEOUS	URANIUM SX STRIPPER 2 ORGANIC	URANIUM SX STRIPPER 1 AQUEOUS	URANIUM SX STRIPPER 2 ORGANIC	URANIUM SX SCRUBBER SULFURIC ACID	URANIUM SX STRIPPER 2 SODIUM CARBONATE	URANIUM SX ORGANIC URANYL-P	URANIUM SX SCRUBBER MIXER SETTLER TWINS
MASS DRY SOLIDS, lb/hr	-	-	-	-	-	-	-	-	-	-	-	-	-	-	-	-	-	-	-	-	-	-	-	-	-
MASS LIQUIDS, lb/hr	3.0	0.003	102164.9	3.0	102109.2	3.0	3.0	102092.5	3.0	102087.5	101999.0	101999.0	0.003	3.0	3.0	6.0	487.5	2421.7	6.0	2421.7	5.9	1.0	2090.0	-	486.5
MASS TOTAL, lb/hr	29885.3	25.6	102171.0	29810.2	102139.9	29841.3	29793.5	102123.2	29788.5	102118.2	102029.7	102004.2	25.5	29750.0	29700.0	59726.4	487.6	2421.9	59726.4	2421.9	59394.5	1.0	2090.0	4.4	486.5
VOL. FLOW RATE, GPM	79.7	0.07	189.0	79.6	189.3	79.6	79.6	189.3	79.6	189.3	189.0	188.9	0.07	79.5	79.4	159.3	1.0	3.9	159.3	3.9	158.7	0.001	3.7	0.01	1.0
%SOLIDS	-	-	-	-	-	-	-	-	-	-	-	-	-	-	-	-	-	-	-	-	-	-	-	-	-
S.G. SOLIDS	-	-	-	-	-	-	-	-	-	-	-	-	-	-	-	-	-	-	-	-	-	-	-	-	-
TEMPERATURE deg F	104.9	97.6	101.6	105.4	104.9	104.9	104.2	105.4	98.1	104.2	98.1	97.5	97.6	101.1	101.1	100.6	100.6	103.7	99.5	99.5	103.7	68.0	68.0	68.0	70.2
U. G/L	1.76	0.04	0.75	0.53	0.22	1.77	0.16	0.07	0.04	0.02	0.00	0.004	0.04	-	-	1.77	0.003	71.69	1.77	71.54	0.004	-	-	-	-
V. G/L	0.04	0.04	1.88	0.04	1.88	0.04	0.04	1.88	0.04	1.88	1.88	1.88	0.04	-	-	0.04	0.02	-	0.04	-	0.04	-	-	-	-
pH	-	-	1.0	-	1.0	-	-	1.0	-	1.0	1.1	1.1	-	-	-	-	1.8	5.4	-	7.7	-	-1.5	11.6	-	-

REV	DATE	DES	REVISION DESCRIPTION	CADD	CHK	RVW
C	05/19/08	CBB	GENERAL UPDATE	SJB	KJS	MDSB
B	03/26/08	CBB	ISSUED FOR APPROVAL	SJB	KJS	MDSB
A	01/18/08	CBB	ISSUED FOR APPROVAL	SJB	DES	MDSB

ENERGY FUELS RESOURCES CORPORATION
PIÑON RIDGE PROJECT
MONTROSE COUNTY, COLORADO

AREA 400
URANIUM SX EXTRACTION TRAIN B,
SCRUB AND STRIP
PROCESS FLOW DIAGRAM

CH2MHILL

PROJECT No.		365541	FILE No.	–
DESIGN	CBB	12/07	SCALE NONE	REV. C
CADD	CJ	12/07	DRAWING	
CHECK	DES	01/08	400-PF-002	
REVIEW	MDSB	01/08		

Plot Time:

COLORADO REGISTERED PROFESSIONAL ENGINEER
DOUGLAS K. MAXWELL
26758
Nov 4, 2009

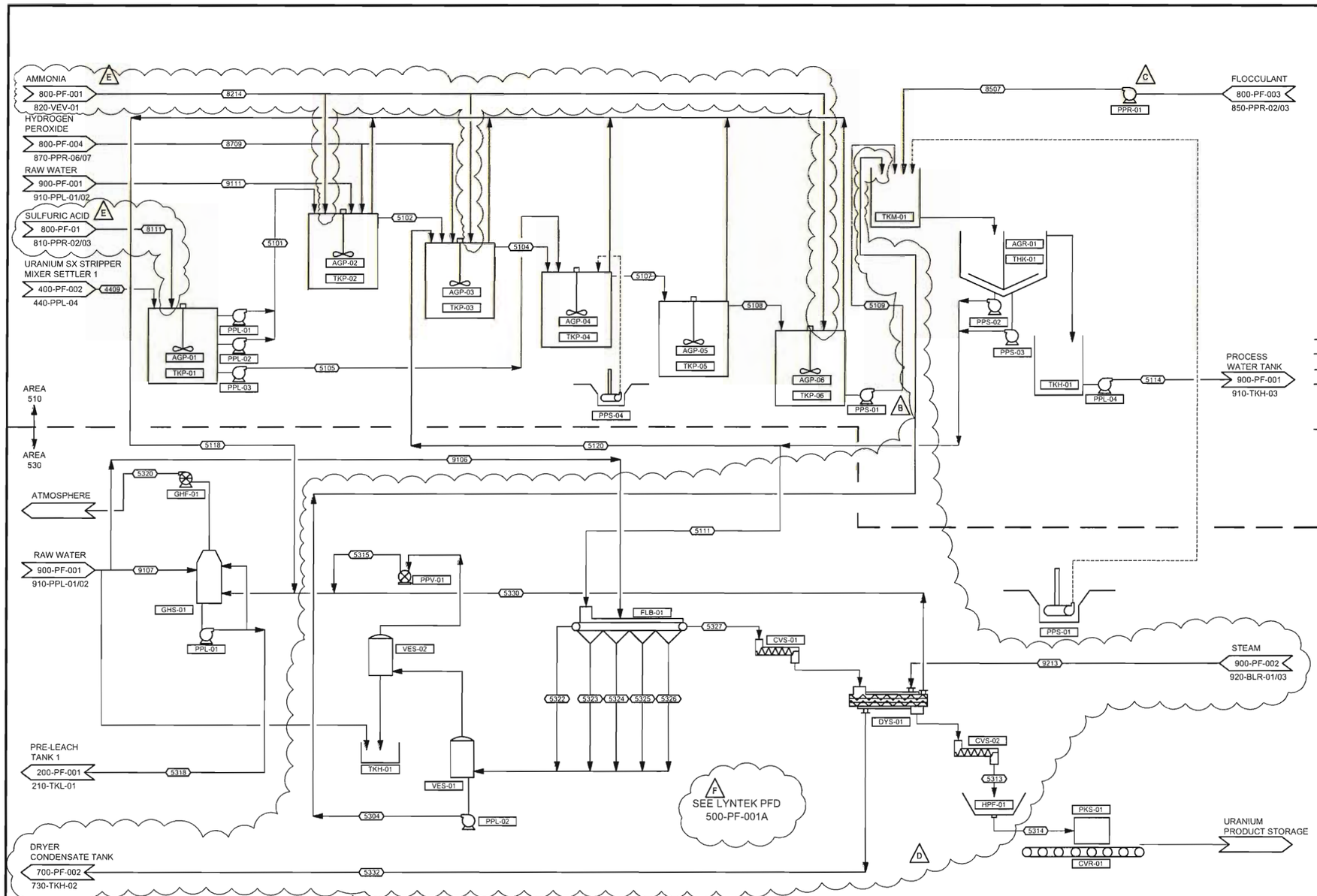

ITEM	QTY	DESCRIPTION	HP
		AREA 510	
AGP-01	1	URANIUM PRECIPITATION FEED TANK AGITATOR	1.5
AGP-02/03	2	URANIUM PRECIPITATION TANKS 2 AND AGITATORS	2
AGP-04/06	3	URANIUM PRECIPITATION TANKS 4 - 6 AGITATORS	5
AGR-01	1	URANIUM THICKENER RAKE	12
PPL-01/03	3	URANIUM PRECIPITATION FEED PUMPS	0.75
PPL-04	1	URANIUM THICKENER OVERFLOW PUMP	5
PPR-01	1	URANIUM THICKENER FLOC. METERING PUMP	0.5
PPS-01	1	URANIUM THICKENER FEED PUMP	1
PPS-02/03	2	URANIUM THICKENER UNDERFLOW PUMPS	1
PPS-04	1	URANIUM PRECIPITATION AREA SUMP PUMP	7.5
THK-01	1	URANIUM THICKENER 32' DIA x 12'	
TKH-01	1	URANIUM THICKENER OVERFLOW PIPE	
TKM-01	1	URANIUM THICKENER MIX FEED BOX	
TKP-01	1	URANIUM PRECIPITATION FEED TANK	
TKP-02/03	2	URANIUM PRECIPITATION TANKS 2 AND 3 5' DIA x 6'	
TKP-04/06	3	URANIUM PRECIPITATION TANKS 4 - 6 8' DIA x 8'	
		AREA 530	
CVR-01	1	URANIUM PRODUCT CONVEYOR	5
~~CVC-01~~	~~1~~	~~WET URANIUM CAKE CONVEYOR~~	~~1~~
~~CVC-02~~	~~1~~	~~DRY URANIUM CAKE CONVEYOR~~	~~1~~
~~DYS-01~~	~~1~~	~~URANIUM STEAM DRYER~~	~~22~~
~~FLD-01~~	~~1~~	~~URANIUM BELT FILTER~~	~~1.5~~
GHF-01	1	URANIUM VENT GAS SCRUBBER FAN	15
GHS-01	1	URANIUM VENT GAS SCRUBBER	
~~HPF-01~~	~~1~~	~~URANIUM PRODUCT FEED HOPPER~~	
PKS-01	1	URANIUM PACKAGING SYSTEM	15
PPL-01	1	URANIUM VENT GAS SCRUBBER PUMP	10
PPL-02	1	URANIUM FILTRATE RECEIVER PUMP	0.5
PPS-01	1	URANIUM PACKAGING AREA SUMP PUMP	10
PPV-01	1	URANIUM VACUUM PUMP	20
TKH-01	1	URANIUM VACUUM SEAL TANK	
VES-01/02	1	URANIUM FILTRATE RECEIVERS 1 AND 2	

NOTES:

1. MASS BALANCE HAS BEEN UPDATED FOR PROCESS CHANGES. MOST FLOW RATES HAVE CHANGED.
2. PRECIPITATION WITH AMMONIA. SULFURIC ACID ADDED THROUGH pH CONTROL.
3. ONLY MADE NECESSARY CHANGES TO STREAMS 5104, 5107, 5108, 5109, 5111, 5114, 5120, 5313, 5314, 5327 TO REFLECT STEADY-STATE OPERATION AND UPSTREAM FEED. NEW NUMBERS ASSUME 100% PLANT AVAILABILITY. DID NOT UPDATE CONCENTRATIONS DENOTED IN (-). DID NOT UPDATE REMAINING STREAMS.

B NOTE 1 D NOTE 2 E

Nov 5, 2009

STREAM	4409	5101	5102	5104	5105	5107	5108	5109	5111	5114	5118	5120	5304	5313	5314
DESCRIPTION	URANIUM SX STRIPPER 1 AMMONIA	URANIUM PRECIPITATION TANK 2 FEED	URANIUM PRECIPITATION TANK 2 OVERFLOW	URANIUM PRECIPITATION TANK 4 FEED	URANIUM PRECIPITATION TANK 4 OVERFLOW	URANIUM PRECIPITATION TANKS OVERFLOW	URANIUM PRECIPITATION TANKS OVERFLOW	URANIUM THICKENER FEED	URANIUM BELT FILTER FEED	URANIUM THICKENER OVERFLOW	URANIUM PRECIPITATION VENT GAS	URANIUM THICKENER UNDERFLOW RECYCLE	URANIUM FILTRATE	URANIUM DRYER DISCHARGE	URANIUM PRODUCT
MASS DRY SOLIDS, lb/hr	-	-	-	329.4	-	329.4	329.4	329.4	164.7	-	-	164.7	-	164.7	164.7
MASS LIQUIDS, lb/hr	2421.7	1931.8	9490.0	9550.5	482.9	10032.3	9959.6	9955.4	109.8	10040.2	-	109.8	261.7	5.4	5.4
MASS TOTAL, lb/hr	2421.9	1932.0	9490.3	9879.9	482.9	10361.7	10358.0	10354.3	274.5	10040.2	154.0	274.5	261.7	170.1	170.1
VOL. FLOW RATE, GPM	3.9	3.1	17.7	18.3	0.8	19.0	19.0	19.0	0.3	18.8	-	0.3	0.5	0.1	0.1
%SOLIDS	-	-	-	3.3	-	3.2	3.2	3.2	60.0	-	-	60.0	-	96.8	96.8
S.G. SOLIDS	-	-	-	6.0	-	6.0	6.0	6.0	6.0	-	-	6.0	-	6.0	6.0
TEMPERATURE deg F	99.5	90.9	84.6	82.0	90.9	81.6	80.7	79.9	76.2	76.2	81.6	76.2	69.8	194.0	194.0
U, G/L	71.54	71.90	12.66	(1.24)	71.92	(0.24)	(0.05)	(0.01)	(0.01)	0.01	-	(0.01)	0.01	-	-
V, G/L	-	-	-	-	-	-	-	-	-	-	-	-	-	-	-
pH	7.7	7.7	4.5	-	7.7	7.8	7.8	7.8	7.8	7.8	-	7.8	7.6	-	-

STREAM	5315	5318	5320	5322	5323	5324	5325	5326	5327	5330	5332	8111	8507	8709	9106	9107	9111	9213	8214
DESCRIPTION	URANIUM VACUUM PUMP DISCHARGE	URANIUM SCRUBBER DISCHARGE	URANIUM SCRUBBER GAS	BELT FILTER VACUUM	BELT FILTRATE #1	BELT FILTRATE #2	BELT FILTRATE #3	BELT FILTRATE #4	URANIUM DRYER FEED	URANIUM DRYER VENT GAS	URANIUM DRYER CONDENSATE	URANIUM PRECIPITATION SULFURIC ACID	URANIUM THICKENER FLOCCULANT	URANIUM PRECIPITATION HYDROGEN PEROXIDE	WATER TO BELT FILTER	SCRUBBER WASH WATER	URANIUM PRECIPITATION TANK 2 WATER	DRYER STEAM	URANIUM PRECIPITATION AMMONIA
MASS DRY SOLIDS, lb/hr	-	-	-	-	-	-	-	-	164.7	-	-	-	-	-	-	-	-	-	-
MASS LIQUIDS, lb/hr	-	115.7	-	-	66.4	65.2	65.2	65.2	54.0	-	64.9	TBD	2.0	59.0	195.6	100.0	7318.1	-	-
MASS TOTAL, lb/hr	-	115.7	298.4	101.2	66.4	65.2	65.2	65.2	218.7	58.6	64.9	-	2.0	59.0	195.6	100.0	7318.1	64.9	28.3
VOL. FLOW RATE, GPM	-	0.2	-	-	0.1	0.1	0.1	0.1	0.2	-	0.1	-	0.004	0.1	0.4	0.2	14.6	-	-
%SOLIDS	-	-	-	-	-	-	-	-	75.3	-	-	-	-	-	-	-	-	-	-
S.G. SOLIDS	-	-	-	-	-	-	-	-	6.0	-	-	-	-	-	-	-	-	-	-
TEMPERATURE deg F	-	165.6	174.9	56.9	74.8	72.8	71.7	71.1	56.9	194.0	194.0	-	70.2	68.0	70.2	70.2	70.2	332.6	-
U, G/L	-	-	-	-	0.01	0.01	0.003	0.001	-	-	-	-	-	-	-	-	-	-	-
V, G/L	-	-	-	-	-	-	-	-	-	-	-	-	-	-	-	-	-	-	-
pH	-	-	-	-	-	-	-	-	-	-	-	-1.5	-	-	-	-	-	-	-

REV	DATE	DES	REVISION DESCRIPTION	CADD	CHK	RVW
A	11/05/09	RRM	REVISED PFD REFERENCE	HDR	-	-
A	11/04/09	-	LYNTEK - CHGS TO PPT & ADD NOTE 3	HDR	-	-
A	07/14/09	RRM	DELETE 530-CVS-01/02,530-DYS-01,530-FLB-01 & 530-HPF-01	KSS	RRM	RRM
A	06/19/08	CBB	GENERAL UPDATE	SJB	KJS	MDSB
B	03/28/08	CBB	ISSUED FOR APPROVAL	SJB	KJS	MDSB
A	01/18/08	CBB	ISSUED FOR APPROVAL	SJB	DES	MDSB

ENERGY FUELS RESOURCES CORPORATION
PIÑON RIDGE PROJECT
MONTROSE COUNTY, COLORADO

AREA 500
URANIUM PRECIPITATION, DRYING AND PACKAGING
PROCESS FLOW DIAGRAM

CH2MHILL

PROJECT No.		385541	FILE No.	-
DESIGN	CBB	12/07	SCALE NONE	REV. E
CADD	CJ	12/07	DRAWING	
CHECK	DES	01/08	500-PF-001	
REVIEW	MDSB	01/08		

COLORADO REGISTERED PROFESSIONAL ENGINEER
DOUGLAS K. MUNDELL
28758

Plot Time: 11/05/09 13:40

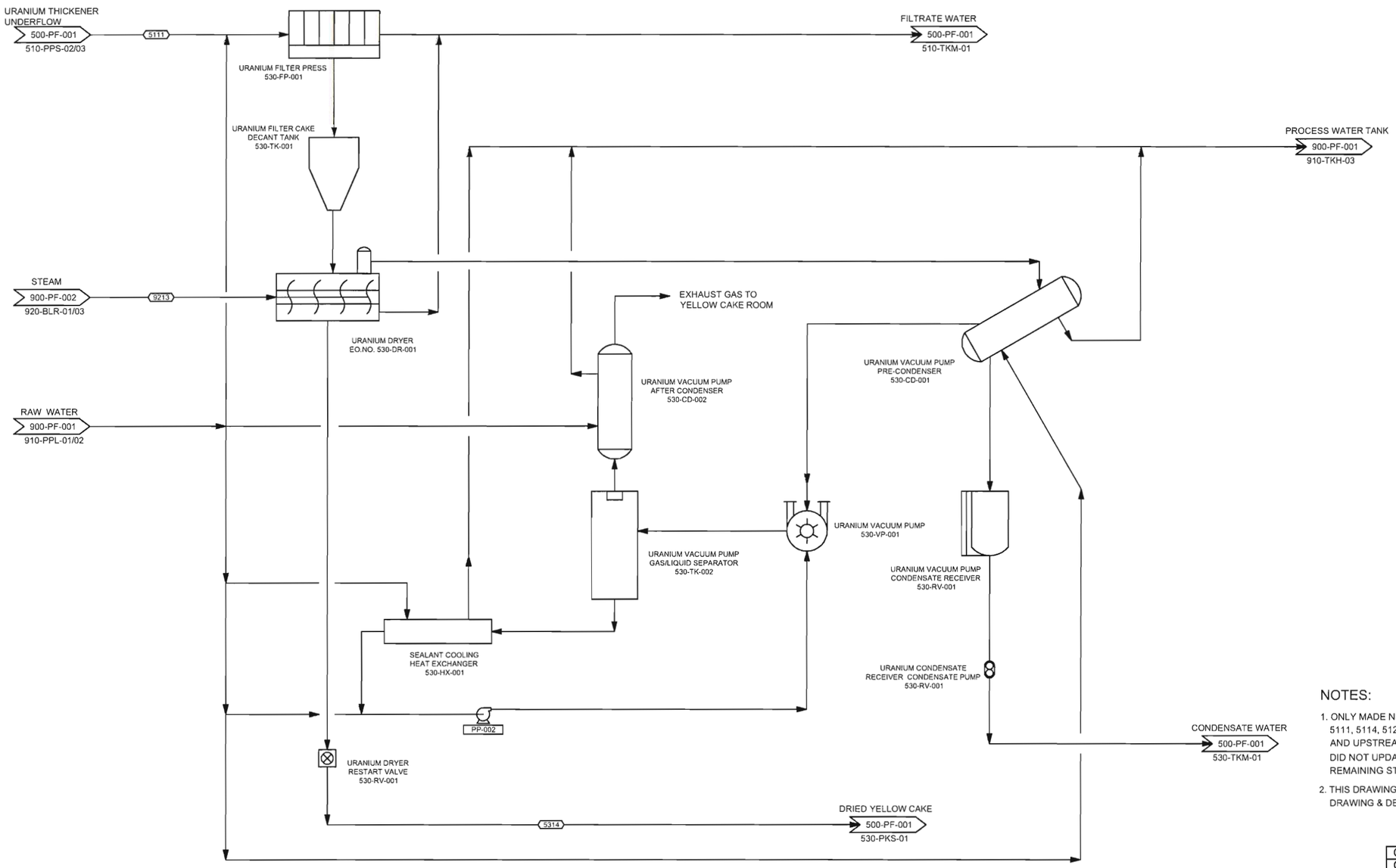

NOTES:

1. ONLY MADE NECESSARY CHANGES TO STREAMS 5104, 5107, 5108, 5109, 5111, 5114, 5120, 5313, 5314, 5327 TO REFLECT STEADY-STATE OPERATION AND UPSTREAM FEED. NEW NUMBERS ASSUME 100% PLANT AVAILABILITY. DID NOT UPDATE CONCENTRATIONS DENOTED IN (-). DID NOT UPDATE REMAINING STREAMS.
2. THIS DRAWING IS AN ADAPTATION OF A LYNTEK-SUGGESTED PROCESS. DRAWING & DESIGN PREPARED AT DIRECTION OF EFR.

STREAM	5111	5314	9213													
DESCRIPTION	URANIUM FILTER FEED	URANIUM PRODUCT	DRYER STEAM													
MASS DRY SOLIDS, lb/hr	164.7	164.7	-													
MASS LIQUIDS, lb/hr	109.8	5.4	-													
MASS TOTAL, lb/hr	274.5	170.1	64.9													
VOL. FLOW RATE, GPM	0.3	0.1	-													
%SOLIDS	60.0	96.8	-													
S.G. SOLIDS	6.0	6.0	-													
TEMPERATURE deg F	76.2	194.0	332.6													
U, G/L	0.01	-	-													
V, G/L	-	-	-													
pH	7.8	-	-													

COLORADO REGISTERED PROFESSIONAL ENGINEER DOUGLAS K. MAXWELL 26758

Nov 5, 2009

NO	REVISIONS	BY	APP	DATE
C	LYNTEK– CHG'D TITLEBLOCK,	HDR	DKM	11/05/09
C	ADD NOTE 2, CHG CHART DATA	–	–	–
B	LYNTEK –ADD NOTE 1	HDR	DKM	11/04/09
A	ISSUED FOR APPROVAL	KSS	RRM	07/14/09

ENERGY FUELS RESOURCES CORPORATION
PIÑON RIDGE PROJECT
MONTROSE COUNTY, COLORADO

AREA 500
URANIUM FILTERING AND DRYING
PROCESS FLOW DIAGRAM

LYNTEK INCORPORATED

DRAWING NO.	DRAWING TITLE
REFERENCE DRAWINGS	

THIS DRAWING WAS PREPARED BY LYNTEK, ALL OF THE INFORMATION CONTAINED THEREIN IS THE PROPERTY OF LYNTEK AND NO REPRODUCTION CAN BE MADE WITHOUT THE PROPER WRITTEN AUTHORIZATION OF LYNTEK.

CAD-OP	KSS	NOV–04–09	DATE.TIME LAST MODIFIED	
CKD.			11/05/09 15:00	
P.M.	RRM	NOV–04–09	DRAWING NO.	REV.
CLIENT			500-PF-001A	B
SCALE:	( )			

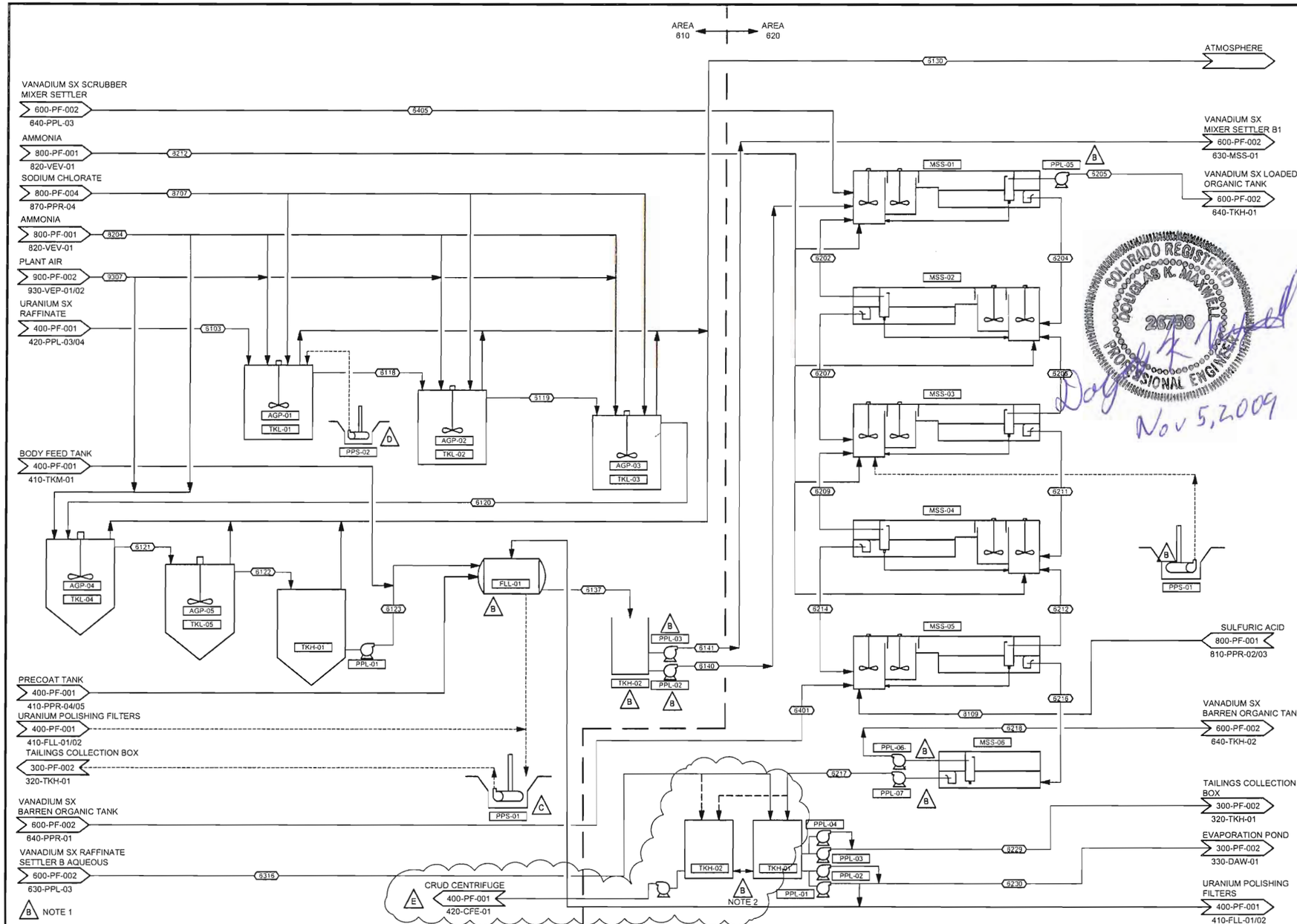

ITEM	QTY	DESCRIPTION	HP
		AREA 610	
AGP-01/03	3	VANADIUM OXIDATION TANKS 1 - 3 AGITATORS	3
AGP-04/05	2	VANADIUM OXIDATION TANKS 4 AND 5 AGITATORS	15
FLL-01	1	VANADIUM POLISHING FILTER	0.75
PPL-01	1	VANADIUM POLISHING FILTER FEED PUMP	25
PPL-02/03	2	VANADIUM SX FEED PUMPS	5
PPS-01	1	POLISHING FILTER AREA SUMP PUMP	7.5
PPS-02	1	VANADIUM OXIDATION AREA SUMP PUMP	7.5
TKH-01	1	VANADIUM POLISHING FILTER FEED TANK 23' DIA x 23'	
TKH-02	1	VANADIUM SX FEED TANK 26' DIA x 20'	
TKL-01/03	3	VANADIUM OXIDATION TANKS 1 - 3 11' DIA x 10'	
TKL-04/05	5	VANADIUM OXIDATION TANKS 4 AND 5 23' DIA x 23'	
		AREA 620	
MSS-01/05	5	VANADIUM SX MIXER SETTLERS A1 - A5 21' L x 10.5 W	8
MSS-06	1	VANADIUM SX RAFFINATE SETTLER A 21' L x 10.5 W	
PPL-01/02	2	VANADIUM RAFFINATE PUMPS 3" x 1.5"	7.5
PPL-03/04	2	VANADIUM RAFFINATE RETURN PUMPS 4" x 3"	15
PPL-05	1	VANADIUM SX MIXER SETTLER A1 ORGANIC PUMP	2
PPL-06	1	VANADIUM SX RAFF. SETTLER A ORGANIC PUMP	0.75
PPL-07	1	VANADIUM SX RAFF. SETTLER A AQUEOUS PUMP	5
PPS-01	1	VANADIUM SX EXTRACTION AREA SUMP PUMP	5
TKH-01	1	VANADIUM SX RAFFINATE TANK 18' DIA x 18'	
TKH-02	1	RAFFINATE BUFFER TANK 26' DIA x 26'	

NOTES:

1. MASS BALANCE HAS BEEN UPDATED FOR PROCESS CHANGES. MOST FLOW RATES HAVE CHANGED.
2. MOVED VANADIUM SX RAFFINATE TANK TO AREA 420 AND ADDED 2 STANDBY PUMPS.

STREAM	6103	6118	6119	6120	6121	6122	6123	6130	6137	6140	6141	6202	6204	6205	6206	6207	6209	6211	6212	6214	6216	6217	6218	6229	6230	6316	6401	6405	8109	8204	8212	8707	9307
DESCRIPTION	VANADIUM OXIDATION FEED	VANADIUM OXIDATION TANK #1 OVERFLOW	VANADIUM OXIDATION TANK #2 OVERFLOW	VANADIUM OXIDATION TANK #3 OVERFLOW	VANADIUM OXIDATION TANK #4 OVERFLOW	VANADIUM OXIDATION TANK #5 OVERFLOW	VANADIUM FILTER FEED	VANADIUM OXIDATION VENT GAS	VANADIUM SX A1 DISCHARGE	VANADIUM SX A1 FEED	VANADIUM SX B1 FEED	VANADIUM SX A2 ORGANIC	VANADIUM SX A1 AQUEOUS	VANADIUM SX A1 ORGANIC	VANADIUM SX A2 ORGANIC	VANADIUM SX A2 AQUEOUS	VANADIUM SX A3 ORGANIC	VANADIUM SX A3 AQUEOUS	VANADIUM SX A4 ORGANIC	VANADIUM SX A4 AQUEOUS	VANADIUM SX A5 AQUEOUS	VANADIUM SX RAFFINATE AQUEOUS(A)	VANADIUM SX RAFFINATE ORGANIC(A)	VANADIUM RAFFINATE RETURN	VANADIUM RAFFINATE	VANADIUM SX RAFFINATE AQUEOUS(B)	VANADIUM SX A5 BARREN ORGANIC	VANADIUM SX A5 BARREN AQUEOUS	VANADIUM SX A5 SULFURIC ACID	VANADIUM OXIDATION AMMONIA	VANADIUM SX (A) AMMONIA	VANADIUM OXIDATION SODIUM CHLORATE	VANADIUM OXIDATION PLANT AIR
MASS DRY SOLIDS, lb/hr	-	-	-	-	-	-	-	-	-	-	-	-	-	-	-	-	-	-	-	-	-	-	-	-	-	-	-	-	-	-	-	-	-
MASS LIQUIDS, lb/hr	204427.5	206335.0	206525.6	206645.4	206590.9	206535.4	206479.3	-	206479.3	103160.6	103160.6	3.0	103565.5	3.0	3.0	103529.0	3.0	103507.1	3.0	103493.9	103470.5	103470.5	-	74.5	28.8	103011.1	3.0	459.1	233.9	-	-	1986.4	-
MASS TOTAL, lb/hr	204494.8	206345.2	206535.9	206655.6	206601.1	206545.6	206489.5	295.2	206489.5	103160.6	103170.9	30050.0	103596.6	30099.0	30002.9	103560.1	29974.6	103538.2	29957.3	103525.0	103501.7	103475.8	25.9	74.5	28.8	103016.4	29698.2	459.2	233.9	273.5	48.2	1986.4	30.0
VOL. FLOW RATE, GPM	378.6	383.5	384.1	384.4	384.1	383.9	383.7	-	383.7	191.7	191.7	80.1	193.0	80.3	80.0	193.2	80.0	193.3	79.9	193.2	192.6	192.5	-	277.0	107.1	191.6	79.3	0.9	0.3	-	-	3.1	-
%SOLIDS	-	-	-	-	-	-	-	-	-	-	-	-	-	-	-	-	-	-	-	-	-	-	-	-	-	-	-	-	-	-	-	-	-
S.G. SOLIDS	-	-	-	-	-	-	-	-	-	-	-	-	-	-	-	-	-	-	-	-	-	-	-	-	-	-	-	-	-	-	-	-	-
TEMPERATURE deg F	97.0	109.3	110.9	111.7	110.6	109.5	108.3	109.7	108.3	107.4	107.4	118.1	114.5	114.5	119.5	118.1	117.8	119.5	103.0	117.8	103.0	102.4	102.4	102.5	102.5	102.5	101.5	109.9	68.0	86.0	86.0	68.0	104.0
U, G/L	0.004	0.004	0.004	0.004	0.004	0.004	0.004	-	0.004	0.004	0.004	0.003	0.004	0.003	0.003	0.004	0.003	0.004	0.003	0.004	0.004	0.004	0.003	0.004	0.004	0.004	0.003	-	-	-	-	-	-
V, G/L	1.88	1.86	1.85	1.85	1.85	1.85	1.86	-	1.86	1.86	1.86	2.63	1.11	4.39	1.56	0.66	0.92	0.40	0.53	0.24	0.02	0.02	0.53	0.02	0.02	0.0	0.005	0.02	-	-	-	-	-
pH	1.1	2.5	2.8	3.0	3.0	3.0	3.0	-	3.0	3.0	3.0	-	4.5	-	-	4.5	-	4.5	-	4.5	4.5	4.5	-	4.44	4.44	4.4	-	1.8	-1.5	-	-	-	-

REV	DATE	DES	REVISION DESCRIPTION	CADD	CHK	RVW
E	11/05/09	RRM	ADD RAFFINATE BUFFER TANK	HDR	-	-
D	06/18/08	CBB	ADDED OXIDATION AREA SUMP PUMP	SJB	KJS	MDSB
C	05/19/08	CBB	GENERAL UPDATE	SJB	KJS	MDSB
B	03/28/08	CBB	ISSUED FOR APPROVAL	SJB	KJS	MDSB
A	01/18/08	CBB	ISSUED FOR APPROVAL	SJB	DES	MDSB

ENERGY FUELS RESOURCES CORPORATION
PIÑON RIDGE PROJECT
MONTROSE COUNTY, COLORADO

AREA 600
VANADIUM OXIDATION AND
SX - EXTRACTION TRAIN A
PROCESS FLOW DIAGRAM

CH2MHILL

PROJECT No.		365541	FILE No.		-
DESIGN	CBB	12/07	SCALE	NONE	REV. E
CADD	CJ	12/07	DRAWING		
CHECK	DES	01/08	600-PF-001		
REVIEW	MDSB	01/08			

Plot Time:11/05/09 11:35

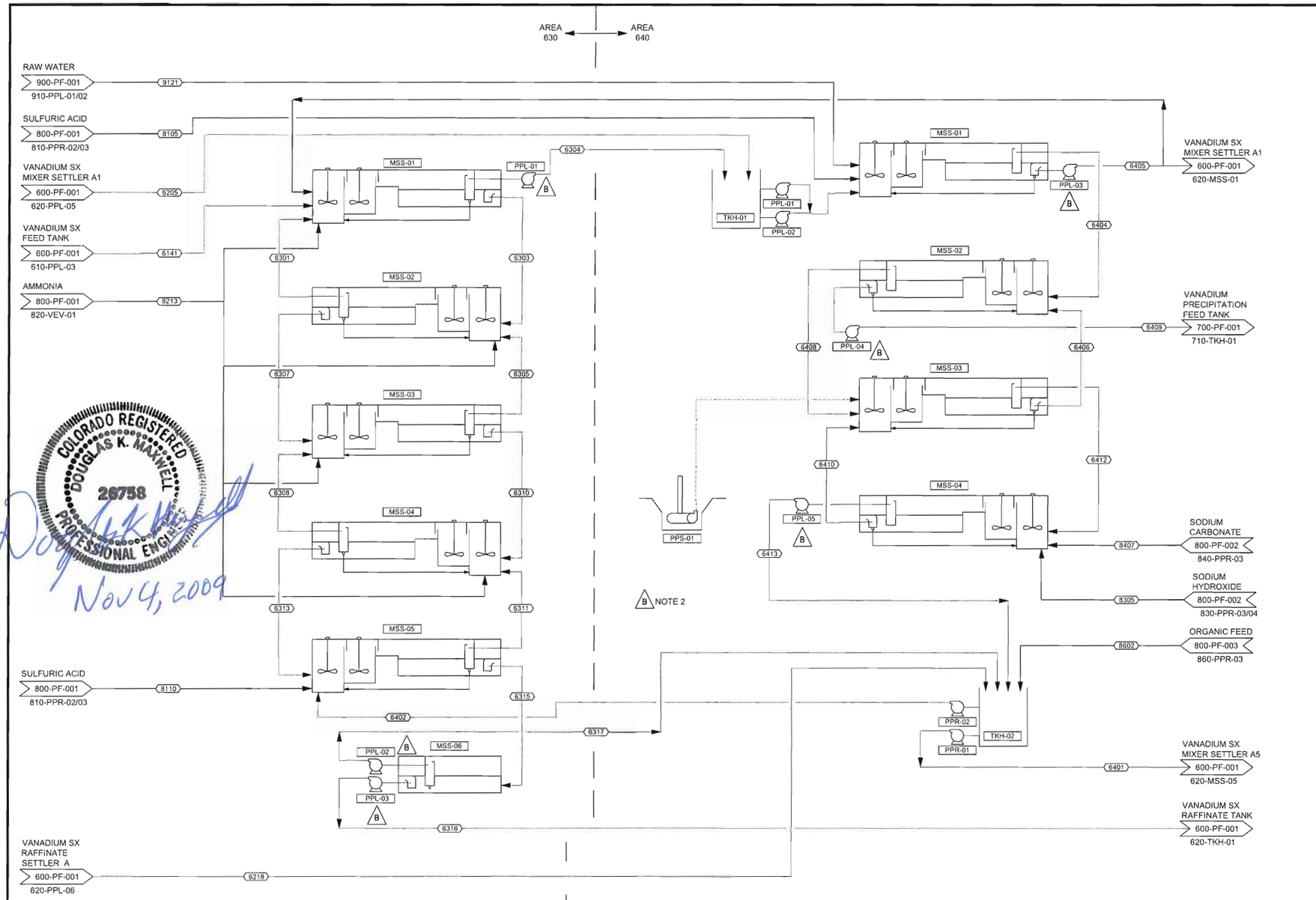

ITEM	QTY	DESCRIPTION	HP
		AREA 630	
MSS-01/05	5	VANADIUM SX MIXER SETTLERS B1 - B5 21' L x 10.5 W	8
MSS-06	1	VANADIUM SX RAFFINATE SETTLER B 21' L x 10.5 W	
PPL-01	1	VANADIUM SX MIXER SETTLER B1 ORGANIC PUMP	2
PPL-02	1	VANADIUM SX RAFF. SETTLER B ORGANIC PUMP	0.75
PPL-03	1	VANADIUM SX RAFF. SETTLER B AQUEOUS PUMP	5
		AREA 640	
MSS-01	1	VANADIUM SX SCRUBBER MIXER SETTLER 15' L x 8' W	8
MSS-02/04	3	VANADIUM SX STRIPPER MIXER SETTLERS 1 - 3 15' L x 8' W	8
PPL-01/02	2	VANADIUM SX LOADED ORGANIC PUMPS 4" x 3"	2
PPL-03	1	VANADIUM SX SCRUBBER AQUEOUS PUMP	1.5
PPL-04	1	VANADIUM STRIPPED LIQUOR PUMP	1
PPL-05	1	VANADIUM RECYCLE ORGANIC PUMP	7.5
PPR-01/02	2	VANADIUM SX BARREN ORGANIC PUMPS 3" x 2"	2
PPS-01	1	VANADIUM SX STRIPPING AREA SUMP PUMP	7.5
TKH-01	1	VANADIUM SX LOADED ORGANIC TANK 24' DIA x 19'	
TKH-02	1	VANADIUM SX BARREN ORGANIC TANK 24' DIA x 19'	

NOTES:

1. MASS BALANCE HAS BEEN UPDATED FOR PROCESS CHANGES. MOST FLOW RATES HAVE CHANGED.
2. REMOVED THE VANADIUM SX REGENERATION MIXER SETTLER.

STREAM	6205	6141	6218	6301	6303	6304	6305	6307	6308	6310	6311	6313	6315	6316	6317	6401	6402	6404	6405	6406	6408	6409	6410	6412	6413	8105	8110	8213	8305	8407	8602	9121
DESCRIPTION	VANADIUM SX A1 ORGANIC	VANADIUM SX B1 FEED	VANADIUM SX RAFFINATE SETTLER A ORGANIC (A)	VANADIUM SX B2 ORGANIC	VANADIUM SX B1 AQUEOUS	VANADIUM SX B1 ORGANIC	VANADIUM SX B3 ORGANIC	VANADIUM SX B2 AQUEOUS	VANADIUM SX B4 ORGANIC	VANADIUM SX B3 AQUEOUS	VANADIUM SX B5 ORGANIC	VANADIUM SX B4 AQUEOUS	VANADIUM SX B5 AQUEOUS	VANADIUM SX RAFFINATE AQUEOUS (B)	VANADIUM SX RAFFINATE ORGANIC (B)	VANADIUM SX A5 BARREN ORGANIC	VANADIUM SX B5 BARREN ORGANIC	VANADIUM SX SCRUBBER ORGANIC	VANADIUM SX SCRUBBER AQUEOUS	VANADIUM SX STRIPPER AQUEOUS	VANADIUM SX STRIPPER ORGANIC	VANADIUM SX STRIPPER H AQUEOUS	VANADIUM SX STRIPPER H ORGANIC	VANADIUM SX STRIPPER AQUEOUS	VANADIUM SX STRIPPER ORGANIC	VANADIUM SX STRIPPER AQ ORGANIC	VANADIUM SX SCRUBBER ORGANIC ACID	VANADIUM SX B5 ORG ACID	VANADIUM SX (B) AMMONIA	VANADIUM SX REGENERATED SODIUM HYDROXIDE	VANADIUM SX STRIPPER SODIUM CARBONATE	VANADIUM SX ORGANIC MAKE-UP	VANADIUM SX SCRUBBER MIXER SETTLER WATER
MASS DRY SOLIDS, lb/hr	-	-	-	-	-	-	-	-	-	-	-	-	-	-	-	-	-	-	-	-	-	-	-	-	-	-	-	-	-	-	-	-
MASS LIQUIDS, lb/hr	3.0	103160.6	-	3.0	103106.1	3.0	3.0	103069.6	3.0	103047.7	3.0	103034.5	103011.1	103011.1	0.003	3.0	3.0	6.0	459.1	3439.7	6.0	4040.5	3379.6	6.0	5.9	1.0	234.0	-	500.0	2678.0	-	458.1
MASS TOTAL, lb/hr	30099.0	103170.9	25.9	30051.3	103137.1	30110.6	30003.3	103100.5	29974.6	103078.6	29957.3	103065.4	103042.1	103016.4	25.8	29698.2	29700.0	60209.4	459.2	3440.1	59608.6	4040.9	3379.9	59548.5	59346.6	1.0	234.0	47.8	500.0	2678.0	0.000001	458.1
VOL. FLOW RATE, GPM	80.3	191.7	-	80.1	192.1	80.3	80.0	192.3	80.0	192.4	79.9	192.3	191.7	191.6	-	79.3	79.3	160.5	0.9	5.9	159.1	6.3	5.9	158.9	158.4	0.001	0.3	-	0.9	4.7	-	0.9
%SOLIDS	-	-	-	-	-	-	-	-	-	-	-	-	-	-	-	-	-	-	-	-	-	-	-	-	-	-	-	-	-	-	-	-
S.G. SOLIDS	-	-	-	-	-	-	-	-	-	-	-	-	-	-	-	-	-	-	-	-	-	-	-	-	-	-	-	-	-	-	-	-
TEMPERATURE deg F	114.5	107.4	102.4	118.1	114.5	114.5	119.5	118.1	117.8	119.5	103.0	117.8	103.0	102.5	102.5	101.5	101.5	109.9	109.9	66.2	68.1	68.1	104.1	66.2	104.1	68.0	68.0	86.0	50.0	68.0	68.0	70.2
U. G/L	0.003	0.004	0.003	0.003	0.004	0.003	0.003	0.004	0.003	0.004	0.003	0.004	0.004	0.004	0.003	0.003	0.003	0.003	-	-	0.003	-	-	0.003	0.003	-	-	-	-	-	-	-
V. G/L	4.39	1.86	0.53	2.6	1.1	4.4	1.6	0.7	0.9	0.4	0.5	0.2	0.02	0.0	0.5	0.005	0.005	4.4	0.02	12.1	0.4	111.7	1.1	0.05	0.005	-	-	-	-	-	-	-
pH	-	3.0	-	-	4.5	-	-	4.5	-	4.5	-	4.5	4.4	4.4	-	-	-	-	1.8	11.3	-	9.2	11.3	-	-	-1.5	-1.5	-	12.0	11.6	-	-

REV	DATE	DES	REVISION DESCRIPTION	CADD	CHK	RVW
3	05/19/08	CBB	GENERAL UPDATE	SJB	KJS	MDSB
2	03/26/08	CBB	ISSUED FOR APPROVAL	SJB	KJS	MDSB
1	01/18/08	CBB	ISSUED FOR APPROVAL	SJB	DES	MDSB

ENERGY FUELS RESOURCES CORPORATION
PIÑON RIDGE PROJECT
MONTROSE COUNTY, COLORADO

AREA 600
VANADIUM SX - EXTRACTION TRAIN B,
SCRUB AND STRIP
PROCESS FLOW DIAGRAM

CH2MHILL

PROJECT No.		365541	FILE No.		-
DESIGN	CBB	12/07	SCALE	NONE	REV. C
CADD	CJ	12/07	DRAWING		
CHECK	DES	01/08	600-PF-002		
REVIEW	MDSB	01/08			

Plot Time:

COLORADO REGISTERED PROFESSIONAL ENGINEER
DOUGLAS K. MAXWELL
26758
Nov 4, 2009

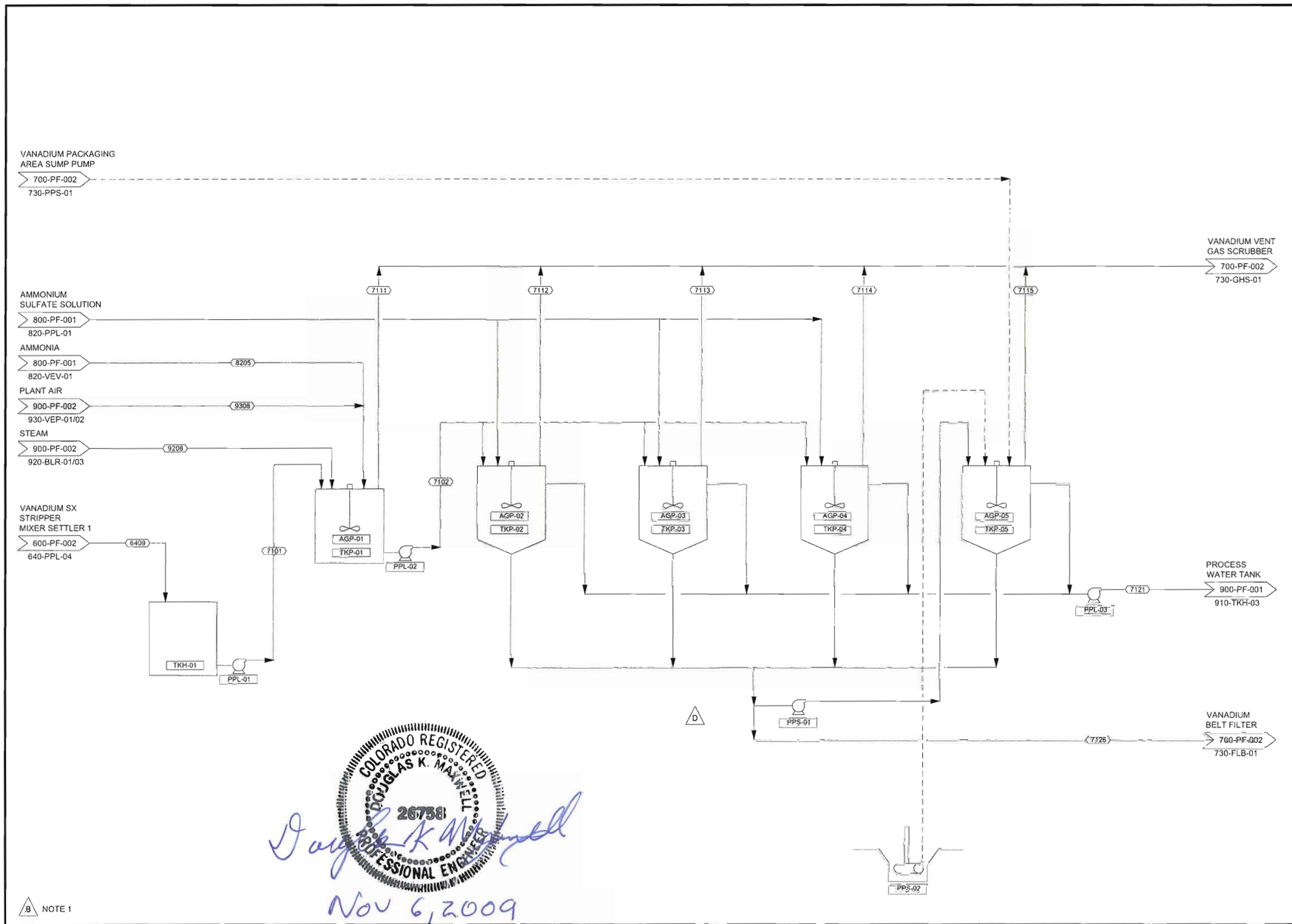

ITEM	QTY	DESCRIPTION	HP
		AREA 710	
AGP-01	1	VANADIUM PRECIPITATION TANKS 1 AGITATOR	5
AGP-02/05	4	VANADIUM PRECIPITATION TANKS 2 - 5 AGITATORS	7.5
PPL-01	1	VANADIUM PRECIPITATION FEED PUMP	1
PPL-02	1	VANADIUM PRECIPITATION TANK 1 PUMP	1
PPL-03	1	VANADIUM PRECIPITATION DECANT PUMP	2
PPS-01	1	VANADIUM PRECIPITATION TANKS 2 - 5 PUMP	3
PPS-02	1	VANADIUM PRECIPITATION AREA SUMP PUMP	7.5
TKH-01	1	VANADIUM PRECIPITATION FEED TANK 8' DIA x 12'	
TKP-01	1	VANADIUM PRECIPITATION TANK 1 8' DIA x 10'	
TKP-02/05	4	VANADIUM PRECIPITATION TANKS 2 - 5	

NOTES:

1. MASS BALANCE HAS BEEN UPDATED FOR PROCESS CHANGES. MOST FLOW RATES HAVE CHANGED.

COLORADO REGISTERED PROFESSIONAL ENGINEER DOUGLAS K. MAXWELL 26758

Nov 6, 2009

NOTE 1

STREAM	6409	7101	7102	7111	7112	7113	7114	7115	7121	7126	8205	8207	9208	9308
DESCRIPTION	VANADIUM SX STRIPPER #1 AQUEOUS	VANADIUM PRECIPITATION TANK 1 FEED	VANADIUM PRECIPITATION TANKS 2-4 FEED	VANADIUM PRECIPITATION TANK 1 VENT GAS	VANADIUM PRECIPITATION TANK 2 VENT GAS	VANADIUM PRECIPITATION TANK 3 VENT GAS	VANADIUM PRECIPITATION TANK 4 VENT GAS	VANADIUM PRECIPITATION TANK 5 VENT GAS	VANADIUM PRECIPITATION COMBINED DECANT	VANADIUM BELT FILTER FEED	VANADIUM PRECIPITATION TANK 1 AMMONIA	VANADIUM PRECIPITATION AMMONIUM SULFATE	VANADIUM PRECIPITATION TANK 1 STEAM	VANADIUM PRECIPITATION TANK 1 PLANT AIR
MASS DRY SOLIDS, lb/hr	-	-		-	-	-	-	-	-	804.5	-	1798.0	-	-
MASS LIQUIDS, lb/hr	4040.5	4048.5	4088.6	-	-	-	-	-	3823.3	1206.6	-	-	-	-
MASS TOTAL, lb/hr	4040.9	4040.9	4089.0	230.0	17.2	17.0	17.0	1.0	3823.6	2011.1	118.6	1798.0	59.5	100.0
VOL. FLOW RATE, GPM	6.3	6.3	6.3	-	-	-	-	-	5.8	2.5	-	2.0	-	-
%SOLIDS	-	-	-	-	-	-	-	-	-	40.0	-	100.0	-	-
S.G. SOLIDS	-	-	-	-	-	-	-	-	-	2.3	-	1.8	-	-
TEMPERATURE deg F	68.1	68.1	149.0	149.0	83.2	83.4	83.4	78.3	82.5	78.3	86.0	68.0	332.6	104.8
U, G/L	-	-	-	-	-	-	-	-	-	-	-	-	-	-
V, G/L	111.7	111.71	112.55	-	-	-	-	-	0.76	0.01	-	-	-	-
pH	9.2	9.2	10.8	-	-	-	-	-	10.8	10.8	-	-	-	-

REV	DATE	DES	REVISION DESCRIPTION	CADD	CHK	RVW
6	06/17/08	CBB	GRAVITY FEED TO BELT FILTER	SJB	KJS	MDSB
5	05/19/08	CBB	GENERAL UPDATE	SJB	KJS	MDSB
4	03/26/08	CBB	ISSUED FOR APPROVAL	SJB	KJS	MDSB
3	01/18/08	CBB	ISSUED FOR APPROVAL	SJB	DES	MDSB

ENERGY FUELS RESOURCES CORPORATION
PIÑON RIDGE PROJECT
MONTROSE COUNTY, COLORADO

AREA 700
VANADIUM PRECIPITATION

PROCESS FLOW DIAGRAM

CH2MHILL

PROJECT No.		365541	FILE No.	–
DESIGN	CBB	12/07	SCALE NONE	REV. C
CADD	CJ	12/07	DRAWING	700-PF-001
CHECK	DES	01/08		
REVIEW	MDSB	01/08		

Plot Time:

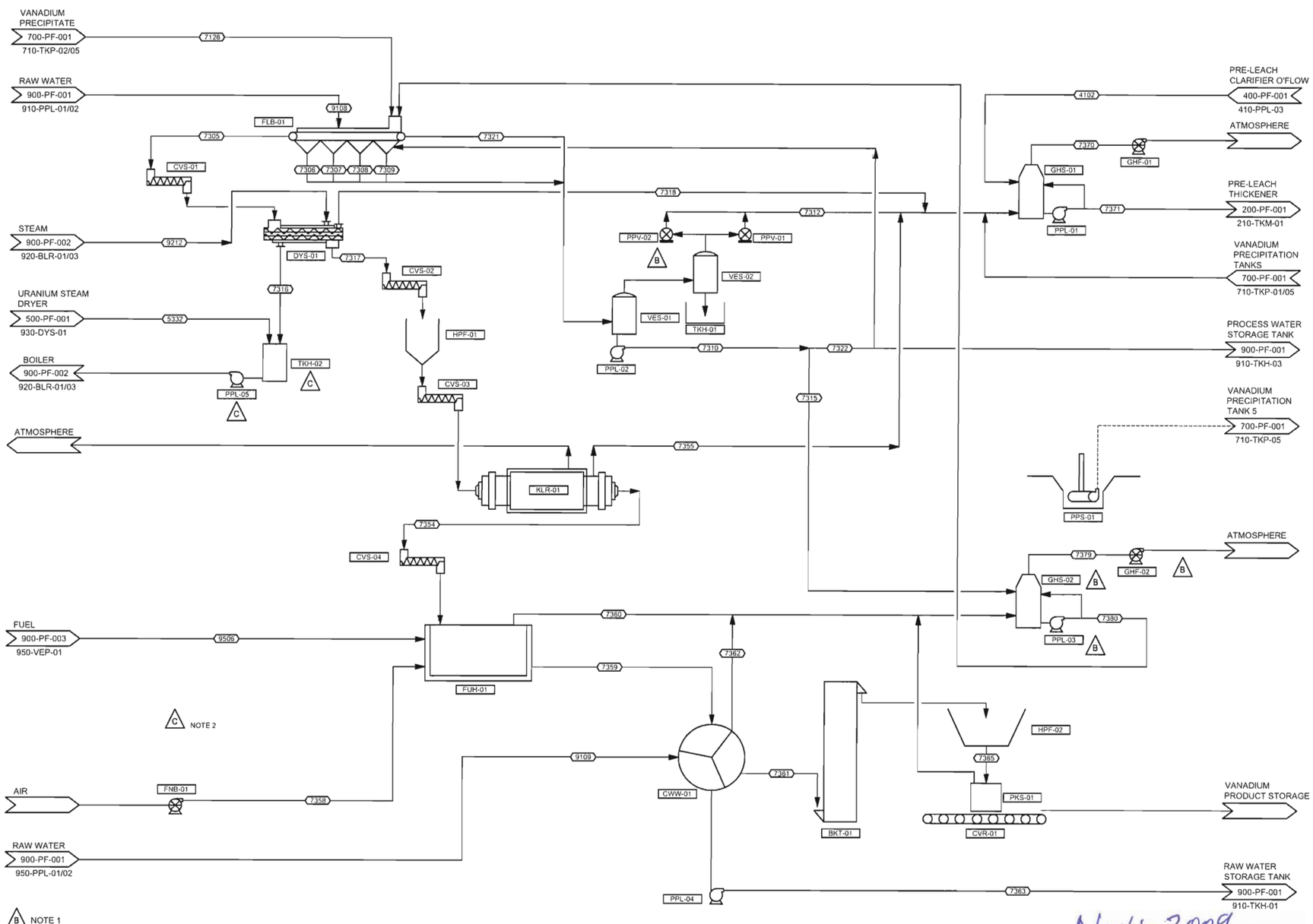

ITEM	QTY	DESCRIPTION	HP
		AREA 730	
BKT-01	1	BUCKET ELEVATOR	5
CVR-01	1	VANADIUM PRODUCT CONVEYOR	5
CVS-01	1	WET VANADIUM CAKE CONVEYOR	1
CVS-02	1	DRY VANADIUM CAKE CONVEYOR	1
CVS-03	1	ROTARY KILN FEED CONVEYOR	0.5
CVS-04	1	GRANULAR VANADIUM CONVEYOR	1
CWW-01	1	CASTING WATER WHEEL	3
DYS-01	1	VANADIUM STEAM DRYER	80
FLB-01	1	VANADIUM BELT FILTER	7
FNB-01	1	FUSION FURNACE COMBUSTION AIR BLOWER	15
FUH-01	1	FUSION FURNACE	
GHF-01	1	VANADIUM VENT GAS SCRUBBER 1 FAN	15
GHF-02	1	VANADIUM VENT GAS SCRUBBER 2 FAN	40
GHS-01/02	2	VANADIUM VENT GAS SCRUBBERS 1 AND 2	
HPF-01	1	ROTARY KILN FEED HOPPER	
HPF-02	1	VANADIUM PRODUCT FEED HOPPER	
KLR-01	1	ROTARY KILN	5
PKS-01	1	VANADIUM PACKAGING SYSTEM	10
PPL-01	1	VANADIUM VENT GAS SCRUBBER 1 PUMP	10
PPL-02	1	VANADIUM FILTRATE RECEIVER PUMP	0.75
PPL-03	1	VANADIUM VENT GAS SCRUBBER 2 PUMP	10
PPL-04	1	CASTING WATER WHEEL RECYCLE PUMP	5
PPL-05	1	DRYER CONDENSATE TANK PUMP	7.5
PPS-01	1	VANADIUM PACKAGING AREA SUMP PUMP	20
PPV-01/02	2	VANADIUM VACUUM PUMPS 1 AND 2	2
TKH-01	1	VANADIUM VACUUM SEAL TANK	
TKH-02	1	DRYER CONDENSATE TANK	
VES-01/02	2	VANADIUM FILTRATE RECEIVERS 1 AND 2	

NOTES:

1. MASS BALANCE HAS BEEN UPDATED FOR PROCESS CHANGES. MOST FLOW RATES HAVE CHANGED.
2. REMOVED ROTARY KILN BURNER
3. IT IS NOT POSSIBLE TO CHECK MASS BALANCE AROUND KILN (KLR-01) DUE TO A LACK OF COMPLETE DATA ON INPUTS. PART OF DISCREPANCY IS ASSUMED TO BE DUE TO CHANGE IN VANADIUM COMPOUNDS.

STREAM	4102	5332	7126	7305	7306	7307	7308	7309	7310	7312	7315	7316	7317	7318	7321	7322	7354	7355	7358	7359	7360	7361	7362	7363	7365	7370	7371	7379	7380	9108	9109	9212	9506	9506
DESCRIPTION	VANADIUM VENT GAS SCRUBBER 1 FEED	URANIUM STEAM CONDENSATE	VANADIUM BELT FILTER FEED	VANADIUM DRYER FEED	BELT FILTRATE #1	BELT FILTRATE #2	BELT FILTRATE #3	BELT FILTRATE #4	VANADIUM FILTRATE	VANADIUM VACUUM PUMP DISCHARGE	VANADIUM BELT FILTRATE TO DRYER 2	VANADIUM DRYER CONDENSATE	ROTARY KILN FEED	VANADIUM DRYER VENT GAS	BELT FILTER VACUUM	VANADIUM BELT FILTRATE TO PROCESS WATER	FUSION FURNACE FEED	ROTARY KILN VENT GAS	AIR TO FUSION FURNACE	CASTING WATER WHEEL FEED	FUSION FURNACE VENT GAS	CASTING WATER WHEEL DISCHARGE	CASTING WATER WHEEL VENT GAS	CASTING WATER WHEEL DISCHARGE	VANADIUM PRODUCT	VANADIUM SCRUBBER 1 GAS	VANADIUM SCRUBBER 1 AQUEOUS	VANADIUM SCRUBBER 2 GAS	VANADIUM SCRUBBER 2 AQUEOUS	WATER TO BELT FILTER	WATER TO CASTING WATER WHEEL	VANADIUM DRYER FUMM	FUSION FURNACE FUEL OIL	FUSION FURNACE FUEL OIL
MASS DRY SOLIDS, lb/hr	3.4	-	804.5	804.5	-	-	-	-	-	-	-	-	808.5	-	-	-	629.4	-	-	-	-	629.4	-	-	629.4	-	3.4	-	-	-	-	-	-	-
MASS LIQUIDS, lb/hr	68152.8	64.9	1206.6	258.1	255.5	255.5	263.2	1108.4	1879.7	-	300.0	261.4	25.4	-	-	1579.7	-	-	-	-	-	-	-	2000.0	-	-	68803.0	-	169.9	774.3	2000.0	-	-	-
MASS TOTAL, lb/hr	68158.2	64.9	2011.1	1062.6	255.5	255.5	263.3	1108.5	1879.8	1013.1	300.0	261.4	833.8	228.7	1010.1	1579.8	629.4	304.5	480.0	629.4	500.4	629.4	100.0	2000.0	629.4	1473.0	68808.4	2730.5	170.0	774.3	2000.0	261.4	20.4	20.4
VOL. FLOW RATE, GPM	126.1	0.1	2.5	1.2	-	-	-	1.7	3.0	-	0.5	0.5	-	-	-	2.6	-	-	-	1.3	-	-	-	4.1	-	-	127.8	-	0.2	1.5	4.0	-	-	-
%SOLIDS	-	-	40.0	75.7	-	-	-	-	-	-	-	-	97.0	-	-	-	100.0	-	-	-	-	100.0	-	-	100.0	-	-	-	-	-	-	-	-	-
S.G. SOLIDS	2.7	-	2.3	2.3	-	-	-	-	-	-	-	-	2.3	-	-	-	3.3	-	-	1.5	-	3.3	-	-	3.3	-	2.7	-	-	-	-	-	-	-
TEMPERATURE deg F	103.0	194.0	78.3	51.8	72.3	73.4	75.2	78.5	69.3	69.3	69.3	194.0	248.0	248.0	51.8	69.3	698.0	698.0	68.0	1472.0	1472.0	204.2	204.2	204.2	204.2	149.6	117.7	138.8	126.8	70.2	70.2	332.6	68.0	68.0
U, G/L	0.74	-	-	-	-	-	-	-	-	-	-	-	-	-	-	-	-	-	-	-	-	-	-	-	-	-	0.74	-	-	-	-	-	-	-
V, G/L	1.88	-	0.01	-	0.001	0.002	0.006	0.010	0.007	-	0.01	-	-	-	-	0.01	-	-	-	353.73	-	-	-	-	-	-	1.86	-	0.01	-	-	-	-	-
pH	1.0	-	10.8	9.4	9.7	10.1	10.6	10.8	10.6	-	10.6	-	-	-	-	10.6	-	-	-	-	-	-	-	-	-	-	-	-	10.9	-	-	-	-	-

Nov 4, 2009

COLORADO REGISTERED PROFESSIONAL ENGINEER
DOUGLAS K. MARNELL
26758

REV	DATE	DES	REVISION DESCRIPTION	CADD	CHK	RVW
4	11/04/09	-	LYNTEK - ADD NOTE 3 VANADIUM PHASE ASSUMPTION	-	-	-
3	05/19/08	CBB	GENERAL UPDATE	SJB	KJS	MDSB
2	03/26/08	CBB	ISSUED FOR APPROVAL	SJB	KJS	MDSB
1	01/18/08	CBB	ISSUED FOR APPROVAL	SJB	DES	MDSB

ENERGY FUELS RESOURCES CORPORATION
PIÑON RIDGE PROJECT
MONTROSE COUNTY, COLORADO

AREA 700
VANADIUM DRYING AND PACKAGING

PROCESS FLOW DIAGRAM

CH2MHILL

PROJECT No.		365541	FILE No.		-
DESIGN	CBB	12/07	SCALE NONE	REV.	D
CADD	CJ	12/07	DRAWING		
CHECK	DES	01/08	700-PF-002		
REVIEW	MDSB	01/08			

Plot Time: 11/04/09 13:13

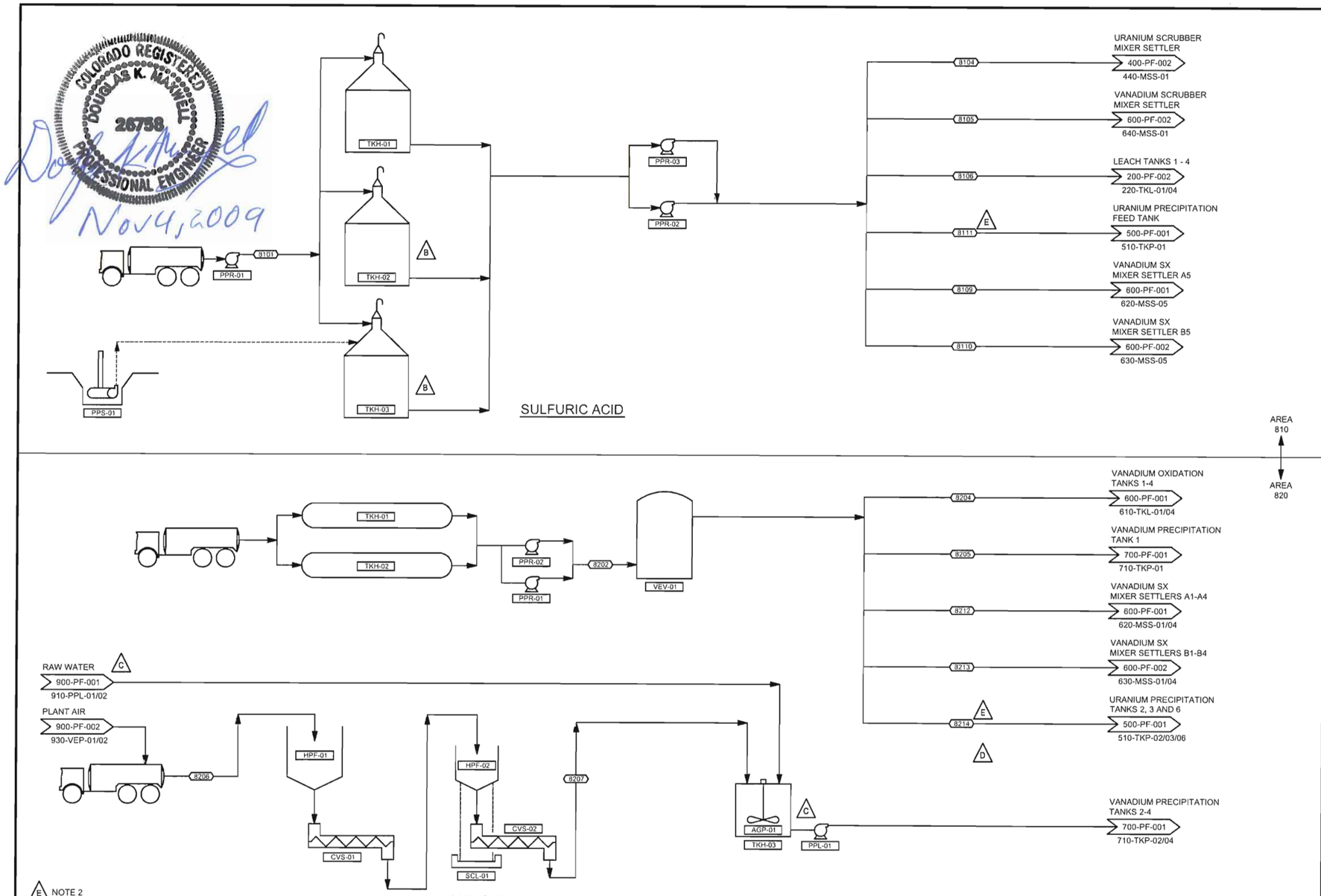

E NOTE 2

B NOTE 1

STREAM	8101	8104	8105	8106	8111 (E)	8109	8110			8202	8204	8205	8206	8207	8212	8213	8214 (E)
DESCRIPTION	SUPPLIED SULFURIC ACID	URANIUM SX SCRUBBER SULFURIC ACID	VANADIUM SX SCRUBBER SULFURIC ACID	SULFURIC ACID TRAIN A	URANIUM PRECIPITATION SULFURIC ACID	VANADIUM SX A5 SULFURIC ACID	VANADIUM SX B5 SULFURIC ACID			SUPPLIED ANHYDROUS AMMONIA	VANADIUM OXIDATION AMMONIA	VANADIUM PRECIPITATION AMMONIA	SUPPLIED AMMONIUM SULFATE	VANADIUM PRECIPITATION AMMONIUM SULFATE	VANADIUM SX (A) AMMONIA	VANADIUM SX (B) AMMONIA	URANIUM PRECIPITATION AMMONIA
MASS DRY SOLIDS, lb/hr	-	-	-	-	-	-	-			-	-	-	1798.0	1798.0	-	-	-
MASS LIQUIDS, lb/hr	15421.0	1.0	1.0	14595.7	TBD	233.9	234.0			488.2	-	-	-	-	-	-	-
MASS TOTAL, lb/hr	15421.0	1.0	1.0	14595.7	-	233.9	234.0			488.2	273.5	118.6	0.9	1798.0	48.2	47.8	28.3
VOL. FLOW RATE, GPM	16.790	0.001	0.001	15.9	-	0.3	0.3			1.2	-	-	2.0	2.0	-	-	-
%SOLIDS	-	-	-	-	-	-	-			-	-	-	100.0	100.0	-	-	-
S.G. SOLIDS	-	-	-	-	-	-	-			-	-	-	1.8	1.8	-	-	-
TEMPERATURE deg F	68.0	68.0	68.0	68.0	-	68.0	68.0			68.0	86.0	86.0	68.0	68.0	86.0	86.0	-
U, G/L	-	-	-	-	-	-	-			-	-	-	-	-	-	-	-
V, G/L	-	-	-	-	-	-	-			-	-	-	-	-	-	-	-
pH	-1.5	-1.5	-1.5	-1.5	-1.5	-1.5	-1.5			12.0	-	-	-	-	-	-	-

ITEM	QTY	DESCRIPTION	HP
		AREA 810	
PPR-01	1	SULFURIC ACID OFF-LOADING PUMP	15
PPR-02/03	2	SULFURIC ACID FEED PUMPS	10
PPS-01	1	SULFURIC ACID AREA SUMP PUMP	7.5
TKH-01/03	3	SULFURIC ACID STORAGE TANKS 28' DIA x 28'	
		AREA 820	
AGP-01	1	AMMONIUM SULFATE SOLUTION TANK AGITATOR	3
CVS-01	1	AMMONIUM SULFATE TRANSFER CONVEYOR	1
CVS-02	1	AMMONIUM SULFATE FEED CONVEYOR	1
HPF-01	1	AMMONIUM SULFATE STORAGE HOPPER 20' DIA x 20'	
HPF-02	1	AMMONIUM SULFATE WEIGH HOPPER	
PPL-01	1	AMMONIUM SULFATE SOLUTION PUMP	0.5
PPR-01/02	2	AMMONIA TRANSFER PUMPS	0.5
SCL-01	1	AMMONIUM SULFATE SCALE	
TKH-01/02	2	AMMONIA STORAGE TANKS	
TKH-03	2	AMMONIUM SULFATE SOLUTION TANK	
VEV-01	1	AMMONIA VAPORIZER	1

NOTES:

1. MASS BALANCE HAS BEEN UPDATED FOR PROCESS CHANGES. MOST FLOW RATES HAVE CHANGED.
2. PRECIPITATION WITH AMMONIA. SULFURIC ACID ADDED THROUGH pH CONTROL.

REV	DATE	DES	REVISION DESCRIPTION	CADD	CHK	RVW
A	11/03/09	-	LYNTEK - PPT CHANGES TO PROCESS	-	-	-
D	06/17/08	CBB	REMOVED AMMONIUM SULFATE CONVEYORS 1-3	SJB	KJS	MDSB
C	05/19/08	CBB	GENERAL UPDATE	SJB	KJS	MDSB
B	03/28/08	CBB	ISSUED FOR APPROVAL	SJB	KJS	MDSB
A	01/18/08	CBB	ISSUED FOR APPROVAL	SJB	DES	MDSB

ENERGY FUELS RESOURCES CORPORATION
PIÑON RIDGE PROJECT
MONTROSE COUNTY, COLORADO

AREA 800
SULFURIC ACID, AMMONIA AND AMMONIUM SULFATE
PROCESS FLOW DIAGRAM

CH2MHILL

PROJECT No.		365541	FILE No.		-
DESIGN	CBB	12/07	SCALE NONE	REV.	E
CADD	SJB	12/07	DRAWING		
CHECK	DES	01/08	800-PF-001		
REVIEW	MDSB	01/08			

Plot Time: 11/04/09 09:50

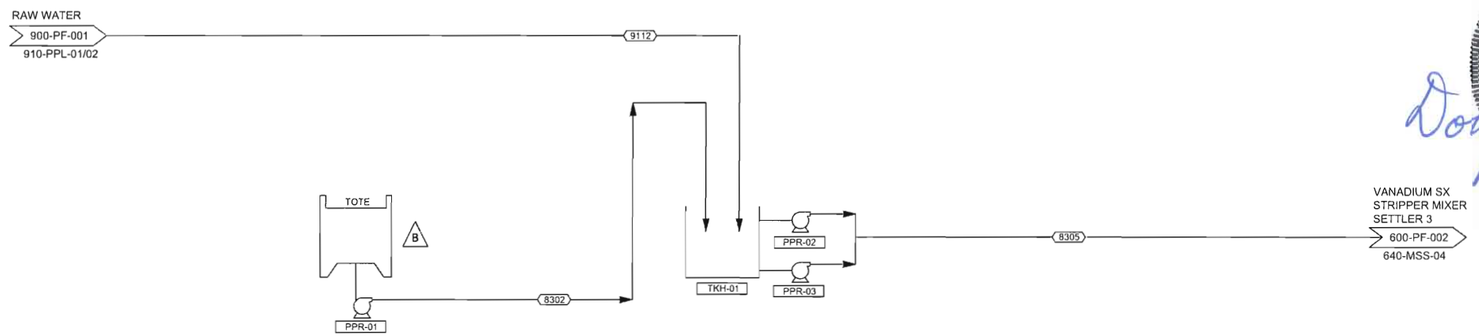

D

SODIUM HYDROXIDE

AREA 830

AREA 840

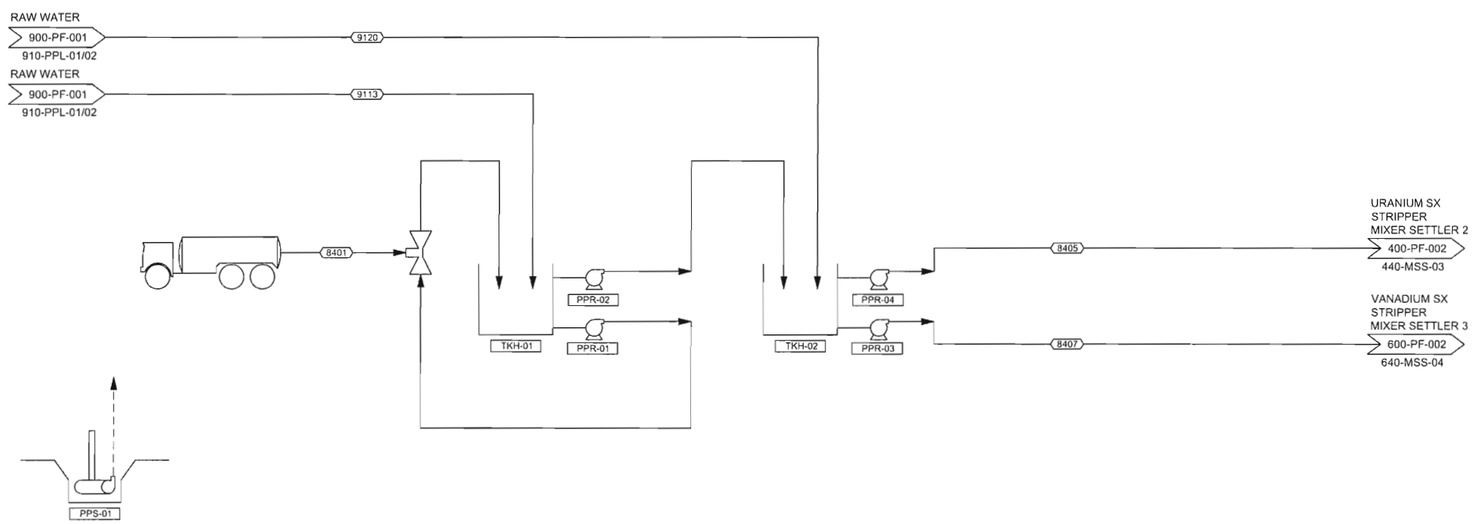

B NOTE 1

SODIUM CARBONATE

STREAM	8302	8305	9112			8401	8405	8407	9113	9120
DESCRIPTION	SUPPLIED SODIUM HYDROXIDE	VANADIUM SX NEUTRALIZED SODIUM HYDROXIDE	SODIUM HYDROXIDE DILUTION WATER			SUPPLIED SODIUM CARBONATE	URANIUM SX STRIPPER RQ SODIUM CARBONATE	VANADIUM SX STRIPPER RQ SODIUM CARBONATE	SODIUM CARBONATE SLURRY WATER	SODIUM CARBONATE DILUTION WATER
MASS DRY SOLIDS, lb/hr	-	-	-			712.9	-	-	-	-
MASS LIQUIDS, lb/hr	50.0	500.0	451.0			-	2090.0	2678.0	1601.8	2458.6
MASS TOTAL, lb/hr	50.0	500.0	451.0			712.9	2090.0	2678.0	1601.8	2458.6
VOL. FLOW RATE, GPM	0.1	0.9	0.9			1.4	3.7	4.7	3.2	4.9
%SOLIDS	-	-	-			-	-	-	-	-
S.G. SOLIDS	-	-	-			-	-	-	-	-
TEMPERATURE deg F	68.0	50.0	70.2			68.0	68.0	68.0	70.2	70.2
U, G/L	-	-	-			-	-	-	-	-
V, G/L	-	-	-			-	-	-	-	-
pH	12.0	12.0	-			-	11.6	11.6	-	-

ITEM	QTY	DESCRIPTION	HP
		AREA 830	
PPR-01	1	SODIUM HYDROXIDE TRANSFER PUMP	0.5
PPR-02/03	2	DILUTE SODIUM HYDROXIDE FEED PUMPS	0.5
TKH-01	1	DILUTE SODIUM HYDROXIDE STORAGE TANK 8' DIA x 12'	
		AREA 840	
PPR-01	1	SODIUM CARBONATE SLURRY RECYCLE PUMP	0.75
PPR-02	1	SODIUM CARBONATE SLURRY TRANSFER PUMP	1.5
PPR-03/04	2	DILUTE SODIUM CARBONATE FEED PUMPS	5
PPS-01	1	SODIUM CARBONATE AREA SUMP PUMP	7.5
TKH-01	1	SODIUM CARBONATE SLURRY STORAGE TANK 15' DIA x 20'	
TKH-02	1	DILUTE SODIUM CARBONATE STORAGE TANK 12' DIA x 18'	

COLORADO REGISTERED
DOUGLAS K. MAXWELL
26758
PROFESSIONAL ENGINEER
Nov 4, 2009

NOTES:

1. MASS BALANCE HAS BEEN UPDATED FOR PROCESS CHANGES. MOST FLOW RATES HAVE CHANGED.

REV	DATE	DES	REVISION DESCRIPTION	CADD	CHK	RVW
6	06/18/08	CBB	REMOVED 830-PPS-01	SJB	KJS	MDSB
5	05/19/08	CBB	GENERAL UPDATE	SJB	KJS	MDSB
4	03/26/08	CBB	ISSUED FOR APPROVAL	SJB	KJS	MDSB
3	01/18/08	CBB	ISSUED FOR APPROVAL	SJB	DES	MDSB

ENERGY FUELS RESOURCES CORPORATION
PIÑON RIDGE PROJECT
MONTROSE COUNTY, COLORADO

AREA 800
SODIUM HYDROXIDE AND
SODIUM CARBONATE
PROCESS FLOW DIAGRAM

CH2MHILL

PROJECT No.		365541	FILE No.		–
DESIGN	CBB	12/07	SCALE NONE	REV.	C
CADD	SJB	12/07	DRAWING		
CHECK	DES	01/08	800-PF-002		
REVIEW	MDSB	01/08			

Plot Time:

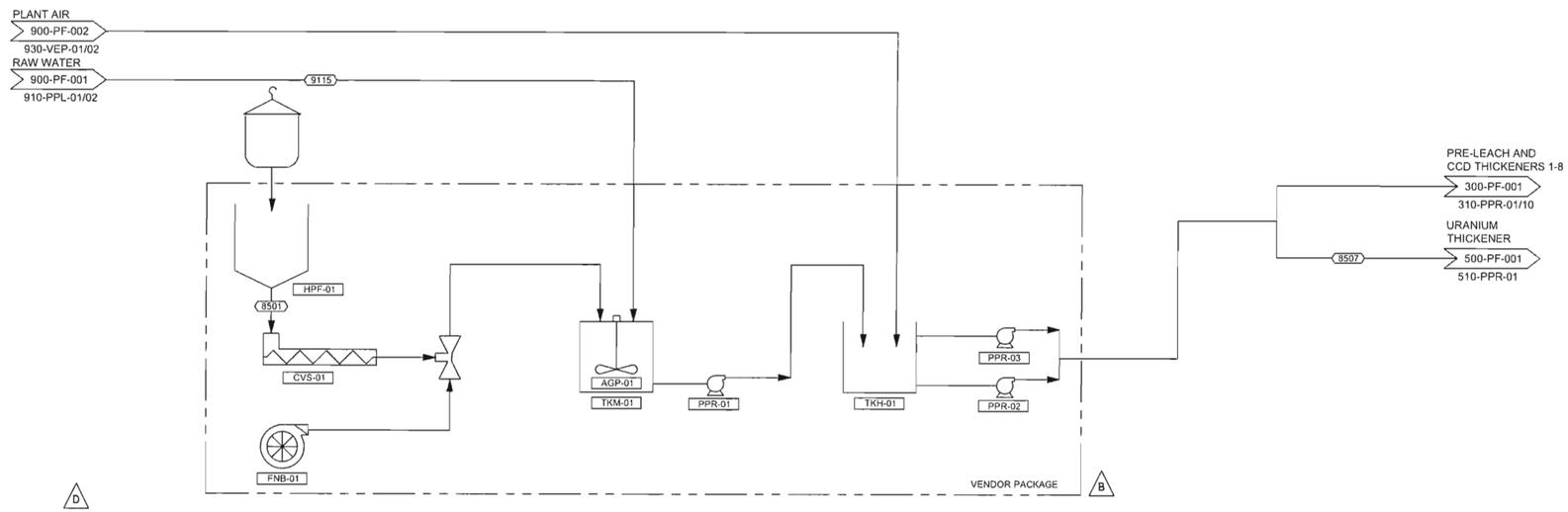

FLOCCULANT

AREA 850
AREA 860

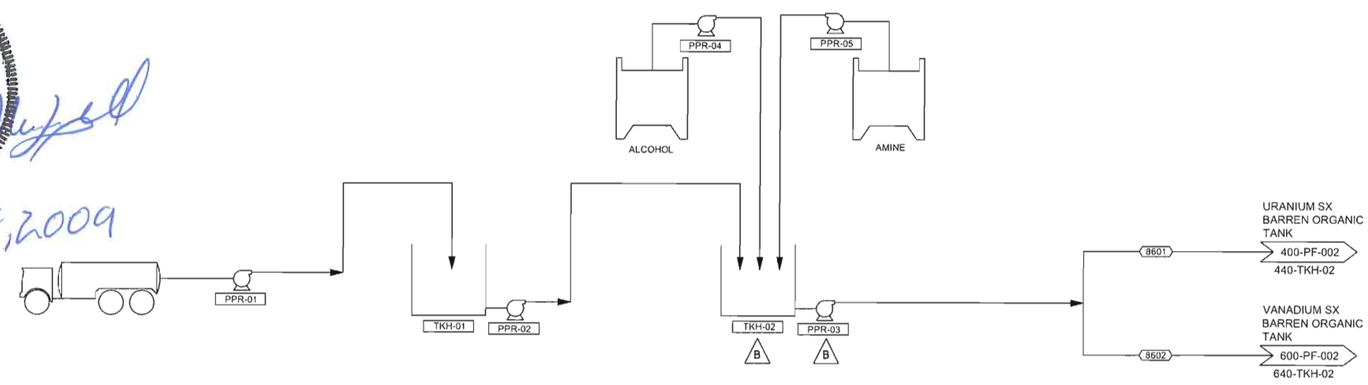

ORGANICS

NOTE 1

STREAM	8501	8507	9115		8601	8602
DESCRIPTION	SUPPLIED DRY FLOCCULANT	URANIUM THICKENER FLOCCULANT	FLOCCULANT MAKE UP WATER		URANIUM SX ORGANIC MAKE UP	VANADIUM SX ORGANIC MAKE UP
MASS DRY SOLIDS, lb/hr	43.7	-	-		-	-
MASS LIQUIDS, lb/hr	-	2.0	8692.8		-	-
MASS TOTAL, lb/hr	43.7	2.0	8692.8		4.4	0.000001
VOL. FLOW RATE, GPM	0.1	0.004	17.4		0.01	-
%SOLIDS	-	-	-		-	-
S.G. SOLIDS	-	-	-		-	-
TEMPERATURE deg F	68.0	70.2	70.2		68.0	68.0
U, G/L	-	-	-		-	-
V, G/L	-	-	-		-	-
pH					-	-

COLORADO REGISTERED
DOUGLAS K. MAXWELL
26758
PROFESSIONAL ENGINEER
Nov 4, 2009

ITEM	QTY	DESCRIPTION	HP
		AREA 850	
AGP-01	1	FLOCCULANT MIX TANK AGITATOR	2
CVS-01	1	FLOCCULANT FEED CONVEYOR	0.5
FNB-01	1	FLOCCULANT BLOWER	3
HPF-01	1	FLOCCULANT FEED HOPPER	
PPR-01	1	FLOCCULANT TRANSFER PUMP	10
PPR-02/03	2	FLOCCULANT FEED PUMPS	5
TKH-01	1	FLOCCULANT STORAGE TANK	
TKM-01	1	FLOCCULANT MIX TANK	
		AREA 860	
PPR-01	1	KEROSENE OFF-LOADING PUMP	5
PPR-02	1	KEROSENE FEED PUMP	3
PPR-03	1	ORGANIC TRANSFER PUMP	5
PPR-04	1	ALCOHOL FEED PUMP	1
PPR-05	1	AMINE FEED PUMP	1
TKH-01	1	KEROSENE STORAGE TANK 18' DIA x 20'	
TKH-02	1	ORGANIC MAKE UP TANK 10' DIA x 10'	

NOTES:

1. MASS BALANCE HAS BEEN UPDATED FOR PROCESS CHANGES. MOST FLOW RATES HAVE CHANGED.

REV	DATE	DES	REVISION DESCRIPTION	CADD	CHK	RVW
6	06/18/08	CBB	REMOVED 850-PPS-01 AND 860-PPS-01	SJB	KJS	MDSB
5	05/19/08	CBB	GENERAL UPDATE	SJB	KJS	MDSB
4	03/26/08	CBB	ISSUED FOR APPROVAL	SJB	KJS	MDSB
3	01/18/08	CBB	ISSUED FOR APPROVAL	SJB	DES	MDSB

ENERGY FUELS RESOURCES CORPORATION
PIÑON RIDGE PROJECT
MONTROSE COUNTY, COLORADO

AREA 800
FLOCCULANT AND ORGANICS

PROCESS FLOW DIAGRAM

CH2MHILL

PROJECT No.		365541	FILE No.		–
DESIGN	CBB	12/07	SCALE	NONE	REV. C
CADD	SJB	12/07	DRAWING		
CHECK	DES	01/08	800-PF-003		
REVIEW	MDSB	01/08			

Plot Time:

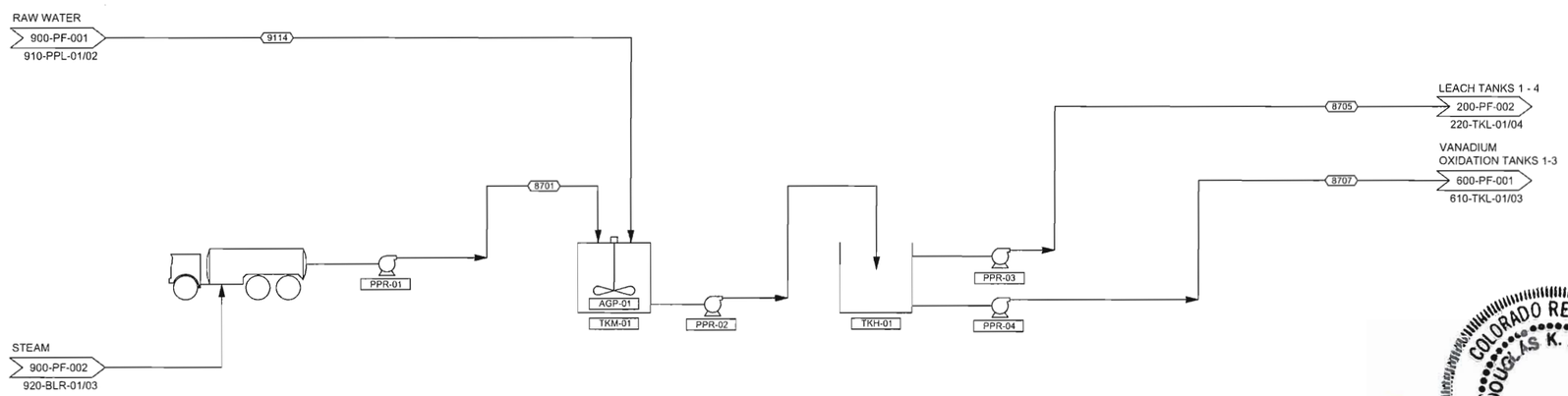

SODIUM CHLORATE

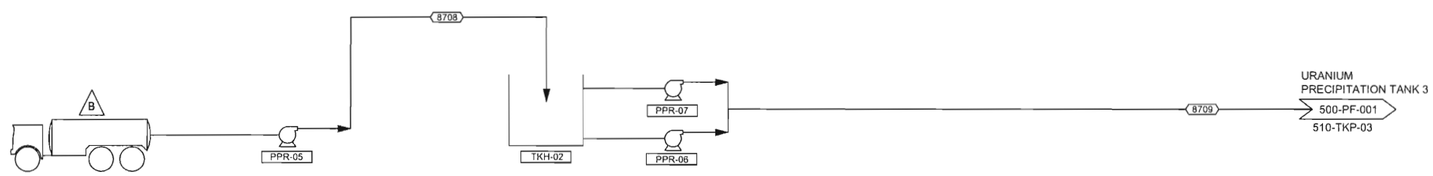

HYDROGEN PEROXIDE

B NOTE 1

STREAM	8701	8705	8707	8708	8709	9114
DESCRIPTION	SUPPLIED SODIUM CHLORATE	SODIUM CHLORATE LEACH TANKS 1-4	VANADIUM OXIDATION SODIUM CHLORATE	SUPPLIED HYDROGEN PEROXIDE	URANIUM PRECIPITATION HYDROGEN PEROXIDE	SODIUM CHLORATE DILUTION WATER
MASS DRY SOLIDS, lb/hr	-	-	-	-	-	-
MASS LIQUIDS, lb/hr	1949.8	513.3	1986.4	59.0	59.0	549.8
MASS TOTAL, lb/hr	1949.8	513.3	1986.4	59.0	59.0	549.8
VOL. FLOW RATE, GPM	2.8	-	3.1	0.1	0.1	1.1
%SOLIDS	-	-	-	-	-	-
S.G. SOLIDS	-	-	-	-	-	-
TEMPERATURE deg F	68.0	68.0	68.0	68.0	68.0	70.2
U, G/L	-	-	-	-	-	-
V, G/L	-	-	-	-	-	-
pH	7.0	-	-	13.0	-	-

ITEM	QTY	DESCRIPTION	HP
		AREA 870	
AGP-01	1	SODIUM CHLORATE MIX TANK AGITATOR	10
PPR-01	1	SODIUM CHLORATE OFF-LOADING PUMP	0.75
PPR-02	1	SODIUM CHLORATE TRANSFER PUMP	2
PPR-03/04	2	SODIUM CHLORATE FEED PUMPS	0.5
PPR-05	1	HYDROGEN PEROXIDE OFF-LOADING PUMP	1
PPR-06/07	2	HYDROGEN PEROXIDE FEED PUMPS	0.5
TKH-01	1	SODIUM CHLORATE STORAGE TANK 24' DIA x 29'	
TKH-02	1	HYDROGEN PEROXIDE STORAGE TANK 9' DIA x 15'	
TKM-01	1	SODIUM CHLORATE MIX TANK 14' DIA x 16'	

NOTES:

1. MASS BALANCE HAS BEEN UPDATED FOR PROCESS CHANGES. MOST FLOW RATES HAVE CHANGED.

REV	DATE	DES	REVISION DESCRIPTION	CADD	CHK	RVW
4	06/18/08	CBB	REMOVED B70-PPS-01	SJB	KJS	MDSB
3	05/19/08	CBB	GENERAL UPDATE	SJB	KJS	MDSB
2	03/26/08	CBB	ISSUED FOR APPROVAL	SJB	KJS	MDSB
1	01/18/08	CBB	ISSUED FOR APPROVAL	SJB	DES	MDSB

ENERGY FUELS RESOURCES CORPORATION
PIÑON RIDGE PROJECT
MONTROSE COUNTY, COLORADO

AREA 800
SODIUM CHLORATE AND
HYDROGEN PEROXIDE
PROCESS FLOW DIAGRAM

CH2MHILL

PROJECT No.		365541	FILE No.		–
DESIGN	CBB	12/07	SCALE	NONE	REV. C
CADD	SJB	12/07	DRAWING		
CHECK	DES	01/08	800-PF-004		
REVIEW	MDSB	01/08			

Plot Time:

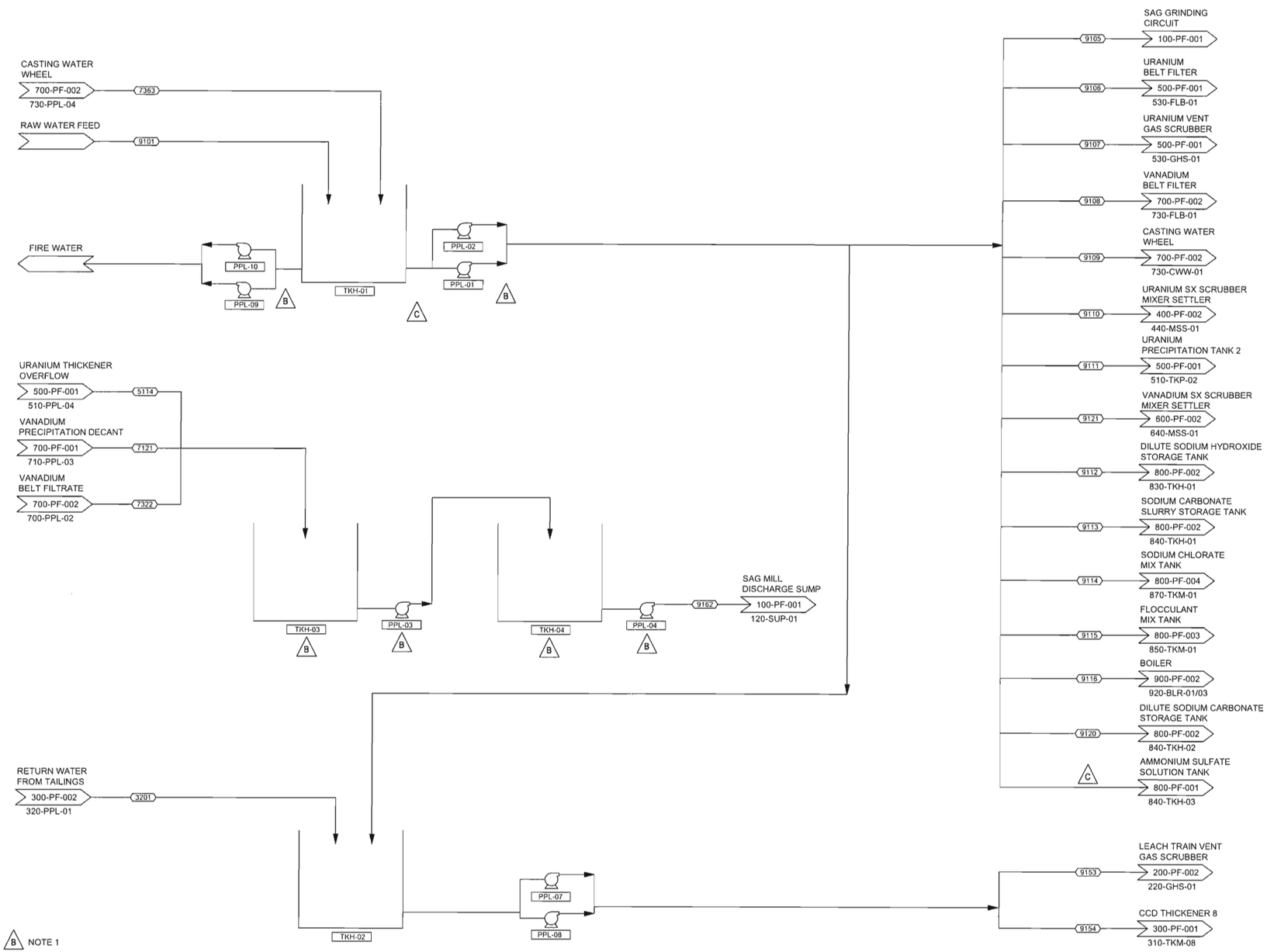

ITEM	QTY	DESCRIPTION	HP
		AREA 910	
PPL-01/02	2	RAW WATER PUMPS 4" x 3"	20
PPL-03	1	PROCESS WATER STORAGE TANK PUMP	1
PPL-04	1	PROCESS WATER DAY TANK PUMP	5
PPL-05/06	2	GLAND WATER SERVICE PUMPS	5
PPL-07/08	2	RETURN WATER PUMPS 4" x 3"	2
PPL-09	1	FIRE WATER JOCKEY PUMP	3
PPL-10	1	FIRE WATER DIESEL PUMP	
TKH-01	1	RAW WATER STORAGE TANK 37' DIA x 40'	
TKH-02	1	RETURN WATER STORAGE TANK 12' DIA x 12'	
TKH-03	1	PROCESS WATER STORAGE TANK 12' DIA x 12'	
TKH-04	1	PROCESS WATER DAY TANK 12' DIA x 12'	

NOTES:

1. MASS BALANCE HAS BEEN UPDATED FOR PROCESS CHANGES. MOST FLOW RATES HAVE CHANGED.

Nov 4, 2009

COLORADO REGISTERED DOUGLAS K. MAXWELL 26758 PROFESSIONAL ENGINEER

STREAM	3201	5114	7121	7322	7363	9101	9105	9106	9107	9108	9109	9110
DESCRIPTION	RETURN WATER FROM TAILINGS	URANIUM THICKENER OVERFLOW	VANADIUM PRECIPITATION DECANT COMBINED WITH	VANADIUM BELT FILTRATE TO PROCESS WATER	CASTING WATER WHEEL WATER DISCHARGE	RAW WATER FEED	SAG GRINDING CIRCUIT	WATER TO URANIUM BELT FILTER	URANIUM VENT GAS SCRUBBER WATER	WATER TO VANADIUM BELT FILTER	CASTING WATER WHEEL	URANIUM SX MIXER SETTLER WATER
MASS DRY SOLIDS, lb/hr	-	-	-	-	-	-	-	-	-	-	-	-
MASS LIQUIDS, lb/hr	101.1	9924.6	3823.3	1579.7	2000.0	129644.1	85128.4	195.6	100.0	774.3	2000.0	486.5
MASS TOTAL, lb/hr	101.1	9924.8	3823.6	1579.8	2000.0	129644.1	85128.4	195.6	100.0	774.3	2000.0	486.5
VOL. FLOW RATE, GPM	374.2	18.8	5.8	2.6	4.1	258.9	170.0	0.4	0.2	1.5	4.0	1.0
%SOLIDS	-	-	-	-	-	-	-	-	-	-	-	-
S.G. SOLIDS	-	-	-	-	-	-	-	-	-	-	-	-
TEMPERATURE deg F	68.0	76.2	82.5	69.3	204.2	68.0	70.2	70.2	70.2	70.2	70.2	70.2
U, G/L	0.004	0.01	-		-	-	-	-	-	-	-	-
V, G/L	0.02	-	0.76	0.01	-	-	-	-	-	-	-	-
pH	3.4	7.8	10.8	10.6	-	-	-	-	-	-	-	-

STREAM	9111	9112	9113	9114	9115	9116	9120	9121	9153	9154	9162
DESCRIPTION	URANIUM PRECIPITATION TANK 2 WATER	SODIUM HYDROXIDE DILUTION WATER	SODIUM CARBONATE SLURRY WATER	SODIUM CHLORATE DILUTION WATER	FLOCCULANT MIXER WATER	BOILER FEED WATER	SODIUM CARBONATE DILUTION WATER	VANADIUM SX SCRUBBER MIXER SETTLER WATER	LEACH VENT SCRUBBER WATER	CCD THICKENER 8 WATER	SAG MILL DISCHARGE PROCESS WATER
MASS DRY SOLIDS, lb/hr	-	-	-	-	-	-	-	-	-	-	-
MASS LIQUIDS, lb/hr	7318.1	451.0	1601.8	549.8	8692.8	16138.3	2458.6	458.1	0.5	201311.1	6.9
MASS TOTAL, lb/hr	7318.1	451.0	1601.8	549.8	8692.8	16138.3	2458.6	458.1	0.5	201321.4	6.9
VOL. FLOW RATE, GPM	14.6	0.9	3.2	1.1	17.4	32.2	4.9	0.9	1.8	372.4	24.4
%SOLIDS	-	-	-	-	-	-	-	-	-	-	-
S.G. SOLIDS	-	-	-	-	-	-	-	-	-	-	-
TEMPERATURE deg F	70.2	70.2	70.2	70.2	70.2	70.2	70.2	70.2	68.0	68.0	77.3
U, G/L	-	-	-	-	-	-	-	-	-	-	0.011
V, G/L	-	-	-	-	-	-	-	-	-	-	0.18
pH	-	-	-	-	-	-	-	-	-	-	-

REV	DATE	DES	REVISION DESCRIPTION	CADD	CHK	RVW
4	05/19/08	CBB	GENERAL UPDATE	SJB	KJS	MDSB
3	03/26/08	CBB	ISSUED FOR APPROVAL	SJB	KJS	MDSB
2	01/18/08	CBB	ISSUED FOR APPROVAL	SJB	DES	MDSB

ENERGY FUELS RESOURCES CORPORATION
PIÑON RIDGE PROJECT
MONTROSE COUNTY, COLORADO

AREA 900
WATER STORAGE

PROCESS FLOW DIAGRAM

CH2MHILL

PROJECT No.		365541	FILE No.		–
DESIGN	CBB	12/07	SCALE	NONE	REV. C
CADD	SJB	12/07	DRAWING		
CHECK	DES	01/08	900-PF-001		
REVIEW	MDSB	01/08			

Plot Time:

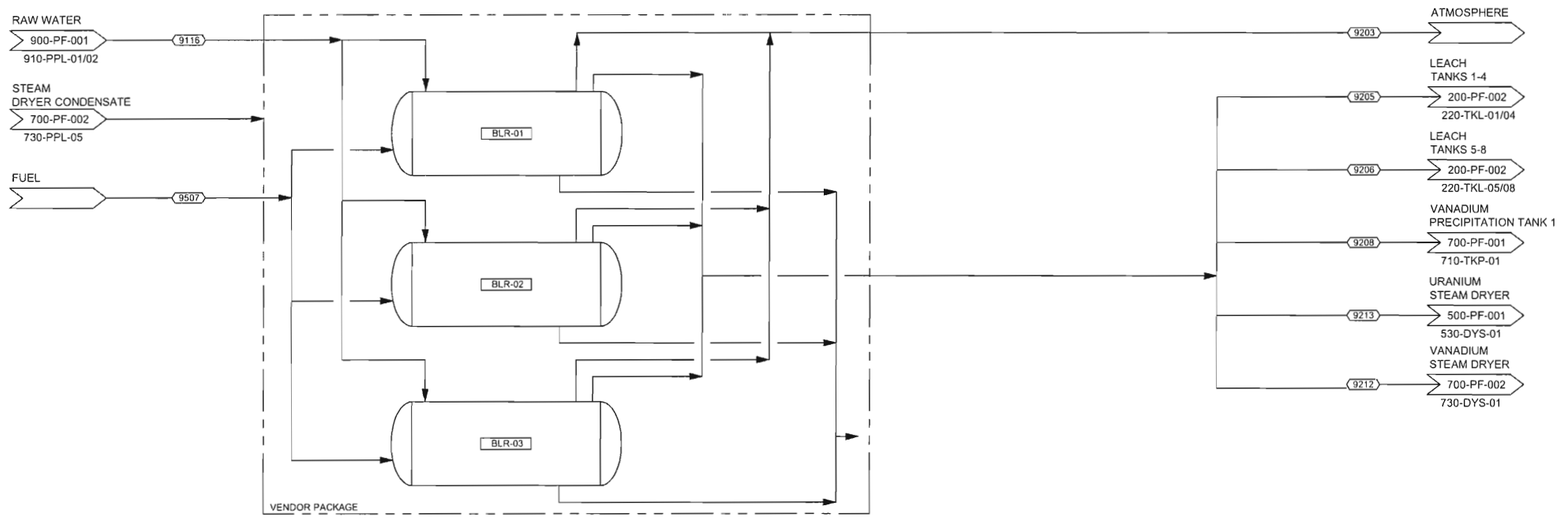

BOILERS

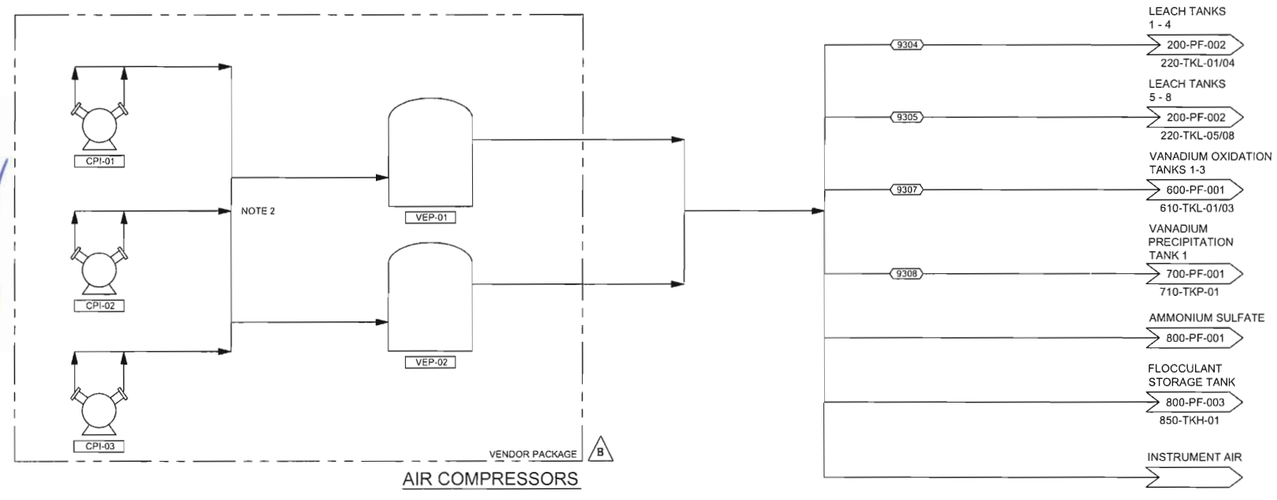

AIR COMPRESSORS

AREA 920

AREA 930

COLORADO REGISTERED
DOUGLAS K. MAXWELL
26758
PROFESSIONAL ENGINEER
Nov 4, 2009

B NOTE 1

STREAM	9116	9203	9205	9206	9208	9212	9213	9507	9304	9305	9307	9308
DESCRIPTION	BOILER FEED WATER	BOILER VENT GAS	STEAM LEACH TANKS 1-4	STEAM LEACH TANKS 5-8	VANADIUM PRECIPITATION TANK 1 STEAM	VANADIUM STEAM DRYER	URANIUM STEAM DRYER	BOILER FUEL	LEACH TANKS 1-4 AIR	LEACH TANKS 5-8 AIR	VANADIUM OXIDATION TANKS AIR	VANADIUM PRECIPITATION TANK #1 PLANT AIR
MASS DRY SOLIDS, lb/hr	-	-	-	-	-	-	-	-	-	-	-	-
MASS LIQUIDS, lb/hr	16138.3	-	-	-	-	-	-	-	-	-	-	-
MASS TOTAL, lb/hr	16138.3	37713.8	5899.0	4111.5	59.5	261.4	64.9	1135.1	40.0	40.0	30.0	100.0
VOL. FLOW RATE, GPM	32.2	-	-	-	-	-	-	-	-	-	-	-
%SOLIDS	-	-	-	-	-	-	-	-	-	-	-	-
S.G. SOLIDS	-	-	-	-	-	-	-	-	-	-	-	-
TEMPERATURE deg F	70.2	394.9	332.6	332.6	332.6	332.6	332.6	68.0	104.0	104.0	104.0	104.0
U, G/L	-	-	-	-	-	-	-	-	-	-	-	-
V, G/L	-	-	-	-	-	-	-	-	-	-	-	-
pH	-	-	-	-	-	-	-	-	-	-	-	-

ITEM	QTY	DESCRIPTION	HP
		AREA 920	
BLR-01/03	3	STEAM BOILERS	
		AREA 930	
CPI-01/03	3	AIR COMPRESSORS	220
VEP-01/02	2	AIR RECEIVERS	

NOTES:

1. MASS BALANCE HAS BEEN UPDATED FOR PROCESS CHANGES. MOST FLOW RATES HAVE CHANGED.
2. VENDOR PACKAGE WILL INCLUDE COOLERS AND DRYERS.

REV	DATE	DES	REVISION DESCRIPTION	CADD	CHK	RVW
C	05/19/08	CBB	GENERAL UPDATE	SJB	KJS	MDSB
B	03/26/08	CBB	ISSUED FOR APPROVAL	SJB	KJS	MDSB
A	01/18/08	CBB	ISSUED FOR APPROVAL	SJB	DES	MDSB

ENERGY FUELS RESOURCES CORPORATION
PIÑON RIDGE PROJECT
MONTROSE COUNTY, COLORADO

AREA 900
BOILERS AND COMPRESSORS

PROCESS FLOW DIAGRAM

CH2MHILL

PROJECT No.		365541	FILE No.		–
DESIGN	CBB	12/07	SCALE	NONE	REV. C
CADD	SJB	12/07	DRAWING		
CHECK	DES	01/08	900-PF-002		
REVIEW	MDSB	01/08			

Plot Time:

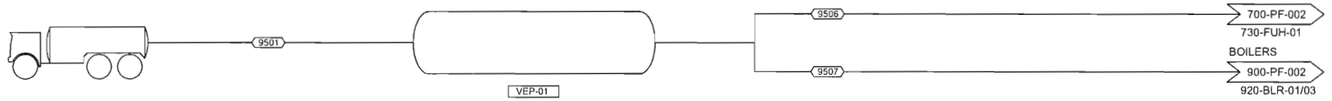

PROPANE

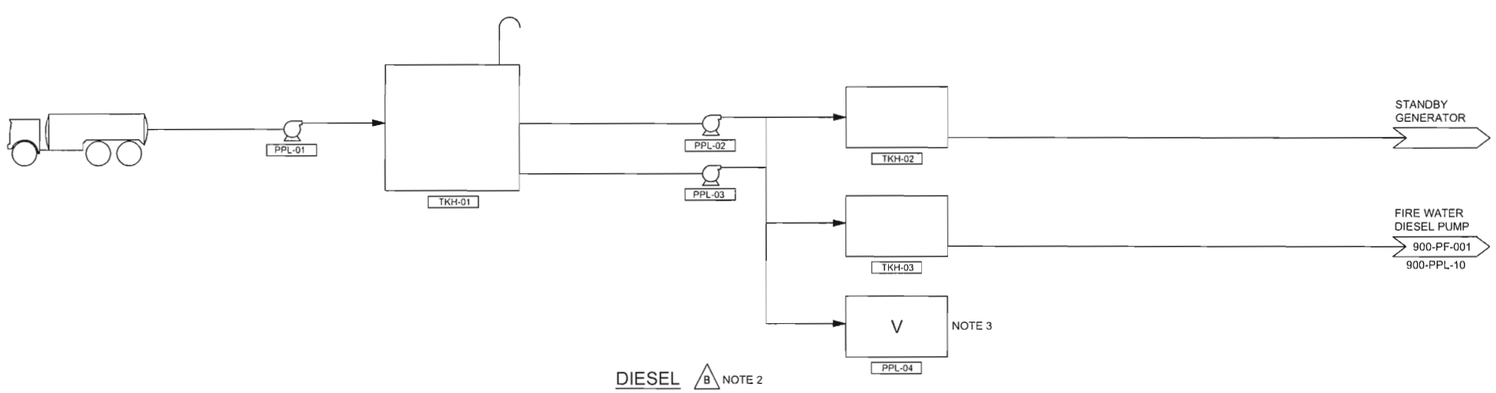

NOTE 1

DIESEL

NOTE 2

STREAM	9501	9506	9507
DESCRIPTION	SUPPLIED FUEL	FUSION FURNACE FUEL	BOILER FUEL
MASS DRY SOLIDS, lb/hr	-	-	-
MASS LIQUIDS, lb/hr	-	-	-
MASS TOTAL, lb/hr	1182.6	20.4	1135.1
VOL. FLOW RATE, GPM	-	-	-
%SOLIDS	-	-	-
S.G. SOLIDS	-	-	-
TEMPERATURE deg F	68.0	68.0	68.0
U, G/L	-	-	-
V, G/L	-	-	-
pH	-	-	-

ITEM	QTY	DESCRIPTION	HP
		AREA 950	
PPL-01	1	DIESEL OFF-LOADING PUMP	3
PPL-02/03	2	DIESEL TRANSFER PUMPS	3
PPL-04	1	DIESEL FUELING PUMP	3
TKH-01	1	DIESEL STORAGE TANK 24' DIA x 30'	
TKH-02	1	STANDBY GENERATOR DIESEL DAY TANK	
TKH-03	1	FIRE WATER PUMP DIESEL DAY TANK	
VEP-01	1	PROPANE STORAGE TANK	

COLORADO REGISTERED
DOUGLAS K. MAXWELL
26758
PROFESSIONAL ENGINEER
Nov 4, 2009

NOTES:

1. MASS BALANCE HAS BEEN UPDATED FOR PROCESS CHANGES. MOST FLOW RATES HAVE CHANGED.
2. ADDED DIESEL STORAGE.
3. DIESEL FUELING PUMP SYSTEM

REV	DATE	DES	REVISION DESCRIPTION	CADD	CHK	RVW
C	05/19/08	CBB	GENERAL UPDATE	SJB	KJS	MDSB
B	03/26/08	CBB	ISSUED FOR APPROVAL	SJB	KJS	MDSB
A	01/18/08	CBB	ISSUED FOR APPROVAL	SJB	DES	MDSB

ENERGY FUELS RESOURCES CORPORATION
PIÑON RIDGE PROJECT
MONTROSE COUNTY, COLORADO

AREA 900
FUEL STORAGE

PROCESS FLOW DIAGRAM

CH2MHILL

PROJECT No.		365541	FILE No.	–
DESIGN	CBB	12/07	SCALE NONE	REV. C
CADD	SJB	12/07	DRAWING	
CHECK	DES	01/08	900-PF-003	
REVIEW	MDSB	01/08		

Plot Time: