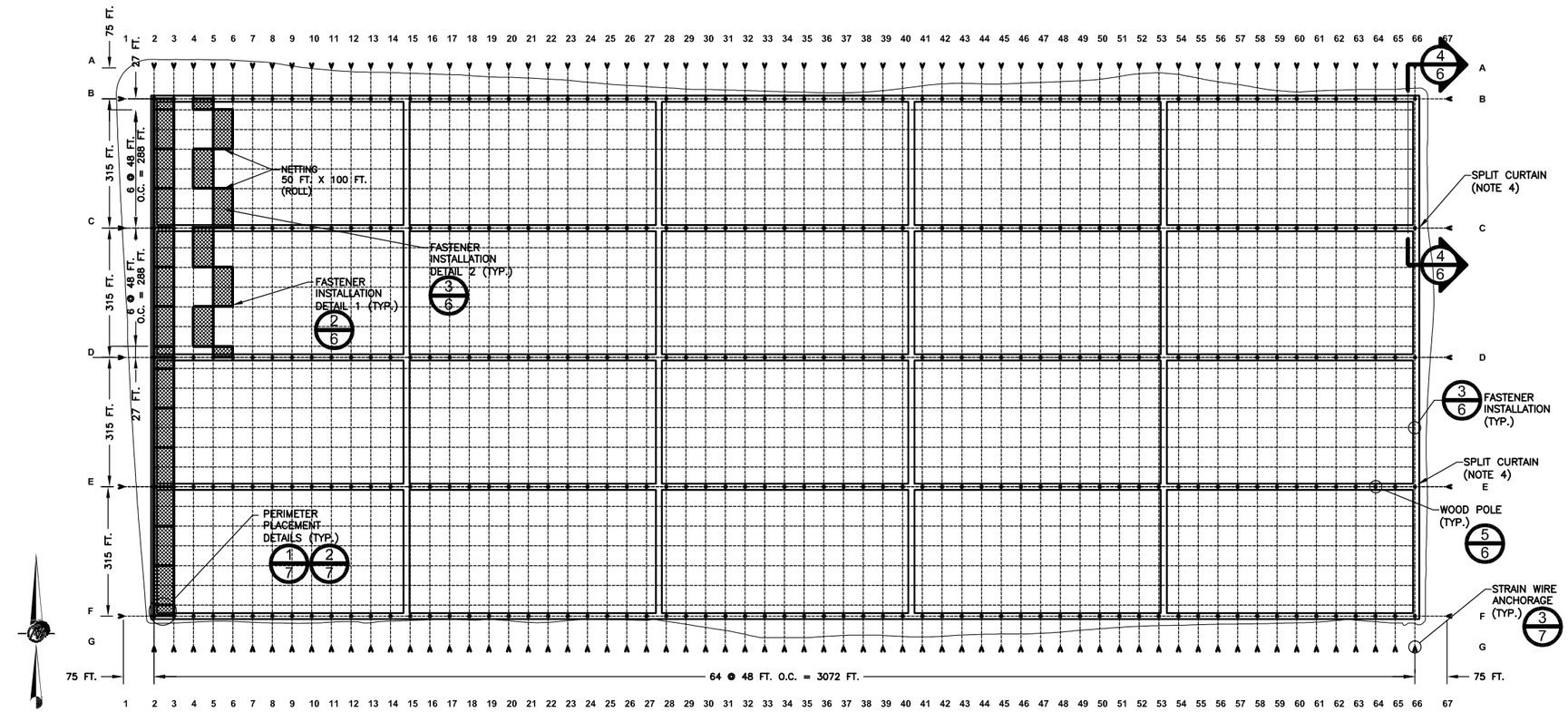

1/6 PLAN VIEW, NETTING PLACEMENT ORIENTATION

1"=150'

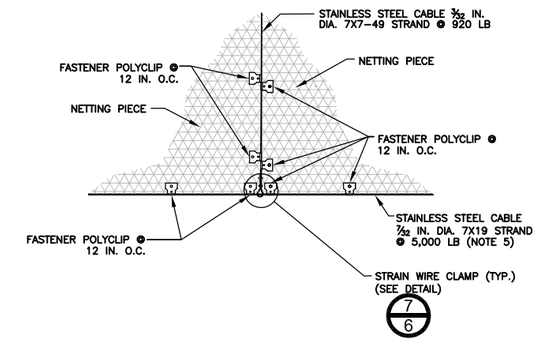

2/6 FASTENER INSTALLATION DETAIL 1

N.T.S.

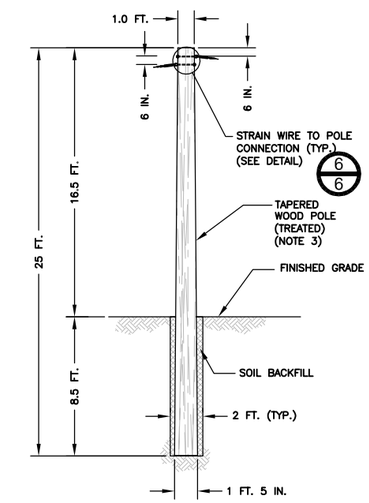

5/6 WOOD POLE DETAIL

N.T.S.

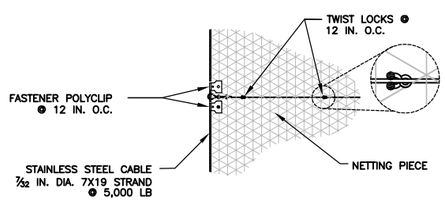

3/6 FASTENER INSTALLATION DETAIL 2

N.T.S.

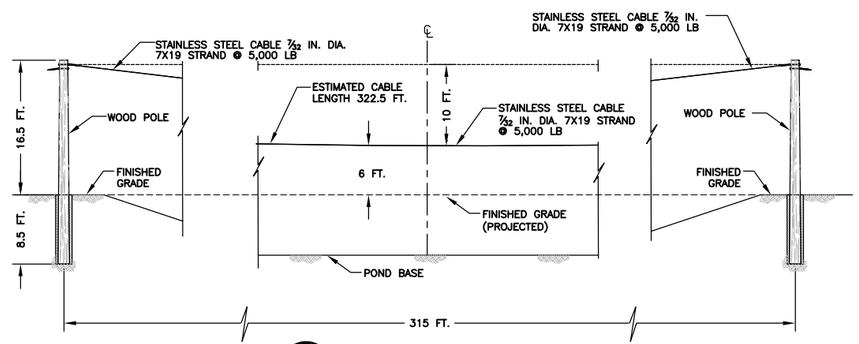

4/6 STRAIN WIRE DISPLACEMENT

N.T.S.

NOTES

1. THE EDGES OF THE NETTING SHALL BE ROLLED AT LEAST 2 TIMES TO ALLOW POLYCLIP TEETH TO GRIP SUFFICIENT NETTING.
2. NETTING PROVIDED WITH 2-INCH OPENINGS.
3. WOOD POLES TO BE TREATED PER THE PROJECT SPECIFICATIONS.
4. PROVIDE SPLIT CURTAINS AT OUTSIDE PERIMETER OF CENTRAL BERMS TO FACILITATE ATV ACCESS.
5. EPOXY-COAT STAINLESS STEEL SUPPORT CABLES.

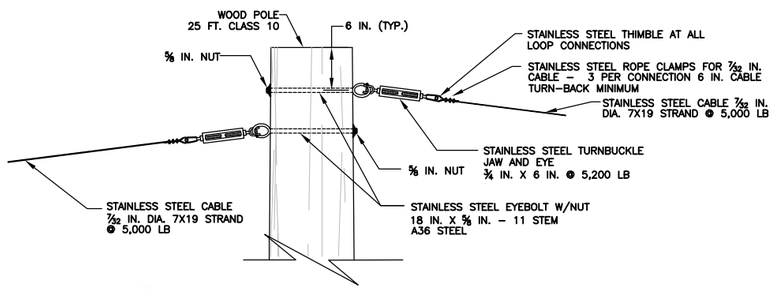

6/6 STRAIN WIRE TO POLE CONNECTION DETAIL

N.T.S.

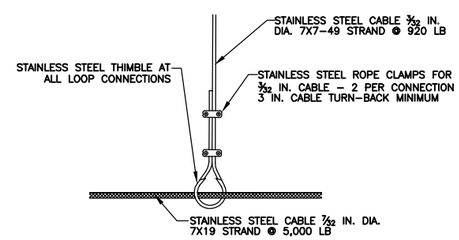

7/6 STRAIN WIRE CLAMPING DETAIL

N.T.S.

REV	DATE	DES	REVISION DESCRIPTION	CADD	CHK	RVW
A	10/8/08	KFM	ISSUED FOR DESIGN REPORT	JWR	KFM	JMJ

PROJECT

ENERGY FUELS RESOURCES CORPORATION
PIÑON RIDGE PROJECT - EVAPORATION PONDS
MONTROSE COUNTY, COLORADO

TITLE

BIRD NETTING PLAN AND DETAILS

Golder Associates
DENVER, COLORADO

PROJECT No.		073-81694	FILE No.	07381694A066
DESIGN	EF	04/08	SCALE AS SHOWN	REV. A
CADD	EF	04/08	6	
CHECK	KFM	04/08		
REVIEW	JMJ	04/08		

Plot Time: 10/07/08 08:58

Dwg Name: N:\073-81694\07381694A066.dwg
Layout Name: DWG6 Machine: DEN1-L-JELLIOTT
Plotted by: Jelliott on 10/07/2008
Last Plot: Oct 07, 2008 08:58 By: Jelliott