DRAWINGS

PIÑON RIDGE PROJECT
EVAPORATION POND DESIGN

DESIGN DRAWINGS PREPARED BY
GOLDER ASSOCIATES INC.
FOR
ENERGY FUELS RESOURCES CORPORATION
MONTROSE COUNTY, COLORADO

DRAWING NUMBER	REVISION	DRAWING TITLE
1	A	TITLE SHEET WITH DRAWING LIST AND LOCATION MAP
2	A	GENERAL PROJECT LAYOUT AND LOCATIONS OF GEOTECHNICAL INVESTIGATIONS
3	A	PHASE I EXCAVATION GRADING PLAN AND ISOPACH
4	A	PHASE II EXCAVATION GRADING PLAN AND ISOPACH
5	A	EVAPORATION POND TYPICAL SECTIONS
6	A	BIRD NETTING PLAN AND DETAILS
7	A	BIRD NETTING DETAILS
8	A	EVAPORATION POND LINER DETAILS
9	A	LEAK COLLECTION AND RECOVERY SYSTEM SECTIONS AND DETAILS

GENERAL NOTES

1. THIS DRAWING SET ILLUSTRATES THE DESIGN REQUIREMENTS FOR CONSTRUCTION OF EVAPORATION PONDS IN UP TO TWO PHASES FOR THE PIÑON RIDGE PROJECT.
2. THE PROPOSED FACILITY IS LOCATED IN SECTIONS 5, 8, AND 17, TOWNSHIP 46 NORTH, RANGE 17 WEST, MONTROSE COUNTY, COLORADO.
3. GOLDER ASSOCIATES INC. (GOLDER) HAS PREPARED THIS DESIGN PACKAGE CONSISTENT WITH THE REQUIREMENTS OF THE COLORADO DEPARTMENT OF PUBLIC HEALTH AND ENVIRONMENT (CDPHE) RULES AND REGULATIONS PERTAINING TO RADIATION CONTROL 6 CCR 1007-1, PART 18.

CONSTRUCTION SEQUENCING

1. PERFORM GENERAL SITE GRADING FOR PHASE I ACCORDING TO THE GENERAL GRADING PLAN.
2. INSTALL WOODEN POLES FOR BIRD NETTING PER THE DESIGN DRAWINGS.
3. PREPARE SUBGRADE WITHIN THE POND CELLS AND INSTALL LINER SYSTEM AS INDICATED.
4. INSTALL BIRD NETTING PER THE DRAWING DETAILS, (SEE DRAWINGS 6 AND 7).
5. IF NECESSITATED BY OPERATIONS WHICH INCLUDES AN INCREASE IN THE MILLING CAPACITY UP TO 1000 TONS PER DAY (TPD) FROM 500 TPD, REPEAT THE ABOVE SEQUENCING FOR PHASE II EXPANSION OF THE EVAPORATION POND SYSTEM.

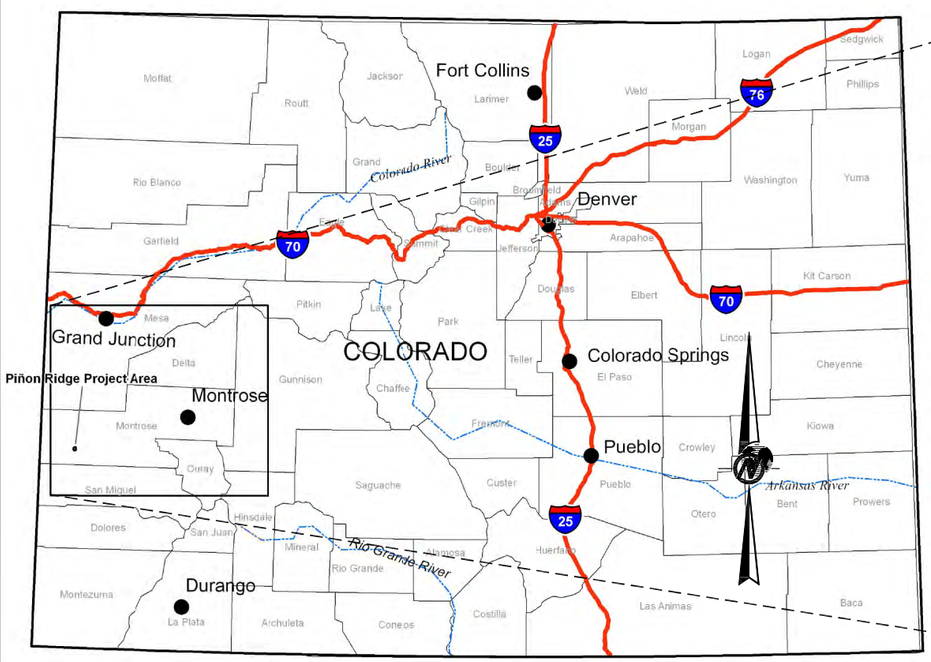

VICINITY MAP

30 0 30
SCALE MILES

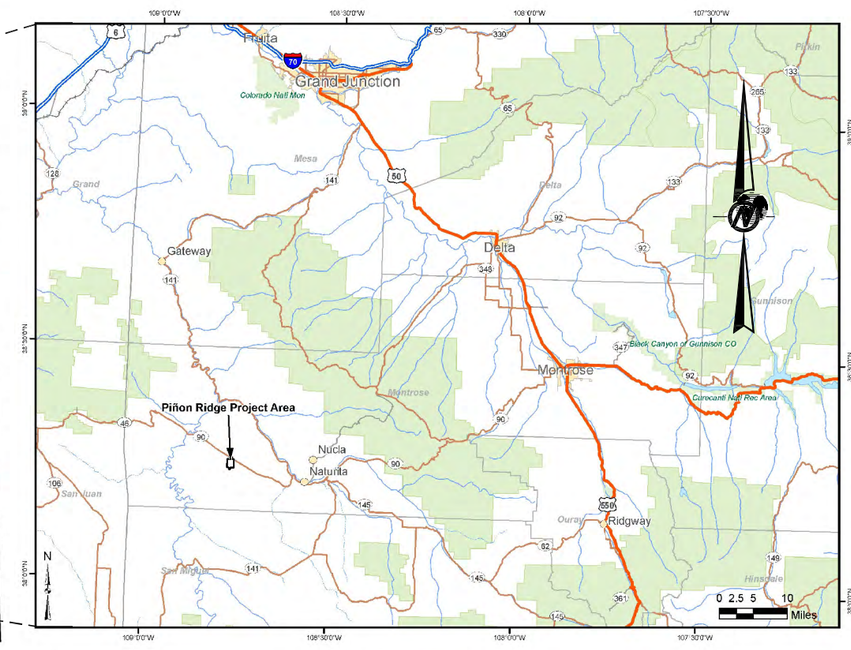

LOCATION SITE MAP

10 0 10
SCALE MILES

REV	DATE	DES	REVISION DESCRIPTION	CADD	CHK	RVW
A	10/8/08	KFM	ISSUED FOR DESIGN REPORT	JDE	KFM	JMJ

PROJECT
ENERGY FUELS RESOURCES CORPORATION
PIÑON RIDGE PROJECT - EVAPORATION PONDS
MONTROSE COUNTY, COLORADO

TITLE
TITLE SHEET WITH DRAWING LIST AND LOCATION MAP

Golder Associates
DENVER, COLORADO

PROJECT No.		073-81694	FILE No.	07381694A031
DESIGN	KFM	2/08	SCALE AS SHOWN	REV. A
CADD	MTM	2/08	DRAWING	1
CHECK	KFM	2/08		
REVIEW	JMJ	2/08		

Plot Time: 10/07/08 08:41

Dwg Name: N:\07\073-81694\07381694A031.dwg
Layout Name: TITLE SHEET - EP Machine: DEN1-L-JELLIOTT
Last Update: Oct 06, 2008 13:48 By: JElliott
Last Plot: Oct 07, 2008 08:41 By: JElliott

Table 2-1 Phase 2 Testpit Locations			
I.D.	Northing	Easting	Elevation
GA-TP-01	1596508.7	2060410.5	5425.1
GA-TP-02	1596555.9	2062587.4	5444.3
GA-TP-03	1595901.2	2060958.5	5439.9
GA-TP-04	1595889.0	2062566.9	5445.8
GA-TP-05	1594959.4	2061470.7	5467.1
GA-TP-06	1594887.2	2062632.2	5456.6
GA-TP-07	1593460.0	2061496.2	5498.2
GA-TP-08	1592971.3	2062039.9	5508.4
GA-TP-09	1591630.0	2061943.2	5542.5
GA-TP-10	1591765.7	2062391.3	5536.1
GA-TP-11	1593903.6	2062412.6	5483.8

Table 2-2 Phase 2 Drillhole Locations			
I.D.	Northing	Easting	Elevation
GA-BH-01	1596809.5	2060098.5	5419.8
GA-BH-02	1596809.4	2060648.6	5430.7
GA-BH-03	1596809.4	2061198.8	5442.3
GA-BH-04	1596809.4	2061749.0	5441.2
GA-BH-05	1596809.5	2062299.1	5432.7
GA-BH-06	1596809.4	2062849.3	5443.9
GA-BH-07	1596186.8	2060098.5	5430.5
GA-BH-08	1596186.8	2060648.7	5433.0
GA-BH-09	1596186.8	2061198.8	5448.9
GA-BH-10	1596186.8	2061749.0	5453.3
GA-BH-11	1596186.8	2062849.3	5443.9
GA-BH-12	1595564.1	2060148.5	5444.4
GA-BH-13	1595564.1	2060698.7	5446.3
GA-BH-14	1595564.1	2061248.8	5459.6
GA-BH-15	1595564.1	2061799.0	5459.3
GA-BH-16	1595564.1	2062349.2	5451.2
GA-BH-17	1595564.1	2062899.4	5446.7
GA-BH-18	1595159.0	2060648.7	5453.5
GA-BH-19	1595158.9	2061198.8	5456.2
GA-BH-20	1595159.0	2062299.2	5458.0
GA-BH-21	1595159.0	2062849.3	5449.5
GA-BH-22	1594658.9	2061198.8	5467.7
GA-BH-23	1594658.9	2061749.0	5476.9
GA-BH-24	1594658.8	2062299.1	5465.7
GA-BH-25	1594658.8	2062849.4	5458.6
GA-BH-26	1594158.7	2060648.7	5472.6
GA-BH-27	1594158.7	2061749.0	5484.4
GA-BH-28	1594158.7	2062299.2	5482.3
GA-BH-29	1594158.7	2062849.3	5473.8
GA-BH-30	1593658.6	2060648.7	5492.3
GA-BH-31	1593658.5	2061198.8	5494.2
GA-BH-32	1593658.5	2061749.0	5491.4
GA-BH-33	1593658.6	2062299.2	5490.7
GA-BH-34	1593658.5	2062849.3	5493.0
GA-BH-35	1593158.4	2061198.8	5506.9
GA-BH-36	1593158.4	2061749.0	5505.3
GA-BH-37	1593158.4	2062299.1	5504.2
GA-BH-38	1593158.4	2062849.3	5500.4
GA-BH-39	1592658.3	2060648.7	5515.8
GA-BH-40	1592658.2	2061198.8	5520.5
GA-BH-41	1592658.3	2061749.0	5517.0
GA-BH-42	1592658.2	2062299.2	5515.4
GA-BH-43	1592658.2	2062849.3	5512.1
GA-BH-44	1591993.8	2062619.9	5531.0
GA-BH-45	1591533.7	2062620.0	5538.8
GA-BH-46	1591533.6	2062159.8	5545.0
GA-BH-47	1591301	2061116	5558
GA-BH-48	1591262	2061811	5556
TB-01	1592383.1	2061089.0	5529.8
TB-02	1592345.1	2061329.2	5530.2
TB-03	1592286.4	2061605.6	5528.5
TB-04	1592228.4	2061863.5	5528.1
TB-05	1592172.2	2062129.9	5528.6
TB-06	1592130.7	2061064.0	5534.2
TB-07	1592093.6	2061309.1	5537.1
TB-08	1592055.3	2061581.3	5536.4
TB-09	1592033.5	2061801.0	5533.1
TB-10	1591994.2	2062062.5	5532.9
TB-11	1591973.6	2061069.1	5538.4
TB-12	1591922.9	2061313.4	5540.6
TB-13	1591810.9	2061522.9	5543.6
TB-14	1591791.3	2061733.9	5540.0
TB-15	1591729.8	2061977.1	5539.5
TB-16	1591740.8	2061024.6	5543.7
TB-17	1591703.0	2061276.2	5547.1
TB-18	1591664.8	2061491.4	5547.3
TB-19	1591639.0	2061662.5	5544.6
TB-20	1591580.9	2061923.1	5543.8
PB-01	1595665.3	2063972.7	5457.5
PB-02	1594878.7	2063676.3	5470.1
PB-03	1594100.2	2063616.5	5486.4
PB-04	1592683.7	2063259.2	5509.7
PB-05	1591673.0	2062844.7	5531.8

Table 2-3 Phase 1 Borehole Locations			
I.D.	Northing	Easting	Elevation
PR1-1	1597859.9	2061661.5	5452
PR1-2	1597335.7	2059249.5	5417
PR1-3	1595950.5	2060110.2	5436
PR1-4	1596313.6	2062461.3	5448
PR1-5	1596763.4	2063490.6	5426
PR1-6	1594993.8	2058978.2	5456
PR1-7	1594770.9	2060386.1	5461
PR1-8	1595232.8	2061816.9	5466
PR1-9	1594698.5	2062045.7	5471
PR1-10	1594329.5	2063839.4	5487
PR1-11	1594197.1	2061358.2	5481
PR1-12	1593384.0	2060405.0	5495
PR1-13	1593400.8	2062173.2	5497
PR1-14	1593338.1	2063190.8	5496
PR1-15	1592361.9	2058840.1	5551
PR1-16	1592065.8	2060628.5	5530
PR1-17	1591874.2	2061530.4	5543
PR1-18	1592020.5	2062213.4	5533
PR1-19	1590853.4	2061719.5	5571
PR1-20	1591043.5	2063607.1	5545

Table 2-4 Phase 1 Monitoring Well Locations			
I.D.	Northing	Easting	Elevation
MW1	1597208.6	2060295.0	5423
MW2	1597132.0	2062819.0	5432
MW3	1595226.9	2059204.8	5448
MW4	1594834.3	2063802.6	5477
MW5	1591190.9	2060280.6	5570
MW6	1591044.0	2062551.0	5553
MW7	1589982.8	2060959.6	5287
MW8	1591822.2	2062942.1	5149
MW9	1592244.1	2060677.5	5122

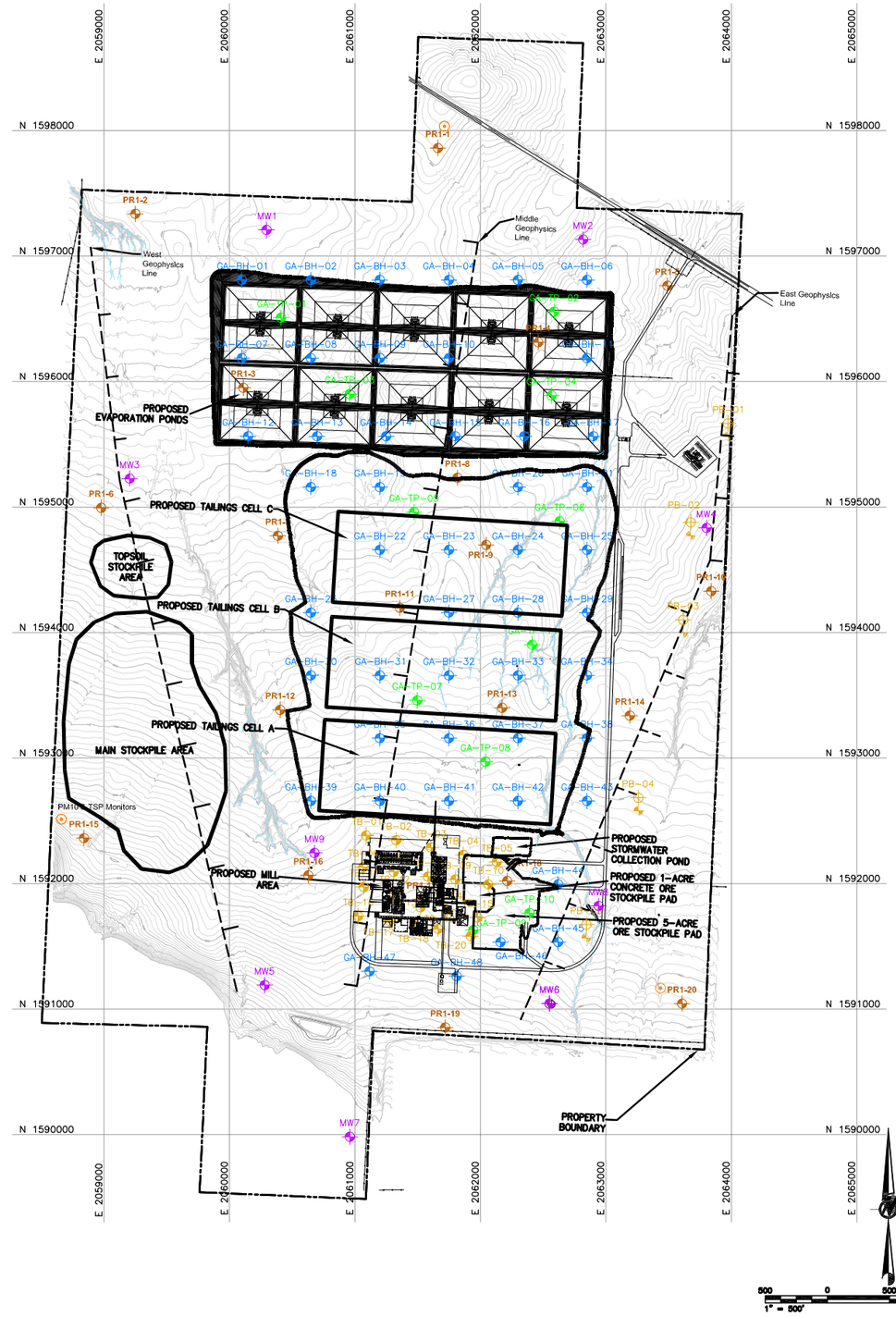

LEGEND

- PR1-20 — KLEINFELDER 2007 GEOTECHNICAL PHASE 1 BORING LOCATIONS
- GA-BH-44 — GOLDER 2007 GEOTECHNICAL PHASE 2 BORING LOCATIONS
- PB-4, TB-15 — KLEINFELDER 2007 GEOTECHNICAL PHASE 2 BORING LOCATIONS
- GA-TP-10 — GOLDER 2007 GEOTECHNICAL PHASE 2 TEST PIT LOCATIONS
- MW5 — KLEINFELDER MONITORING WELL BORING LOCATIONS
- METEOROLOGICAL TOWER / AIR MONITORING STATION
- EFR PROPERTY BOUNDARY
- SEISMIC REFLECTION / REFRACTION LINES
- PROPOSED APPROXIMATE FACILITY AREAS
- EXISTING FENCE LINES

NOTES

1. THE PHASE 1 INVESTIGATION CONDUCTED BY KLEINFELDER INCLUDED INSTALLATION OF MONITORING WELLS (MW-1 THROUGH MW-6), GEOTECHNICAL BOREHOLES (PR-1 THROUGH PR-20), AND THREE GEOPHYSICAL SURVEY LINES. ADDITIONAL MONITORING WELLS (MW-7 THROUGH MW-9) WERE INSTALLED IN 2008.
2. DRILLHOLES GA-BH-1 THROUGH GA-BH-48, TB-1 THROUGH TB-20, AND PB-1 THROUGH PB-5 WERE ADVANCED BY DAKOTA DRILLING OF DENVER, COLORADO, FROM OCTOBER 23 THROUGH DECEMBER 15, 2007. AUGER DRILLING FOR SHALLOW SOIL BORINGS WAS CONDUCTED USING EITHER A CME-55 OR A DIEDRICH 50 DRILL RIG. A DIEDRICH 120 DRILL RIG WAS USED FOR THE DRILLHOLES REQUIRING CORING CAPABILITIES.
3. FOR DRILLHOLES GA-BH-1 THROUGH GA-BH-48, A GOLDER FIELD REPRESENTATIVE LOGGED THE SOIL AND ROCK MATERIALS ENCOUNTERED, COLLECTED SAMPLES OF MATERIALS FOR LABORATORY TESTING, AND OBSERVED AND/OR CONDUCTED IN-SITU TESTING. OTHER PHASE 2 DRILLING WAS OBSERVED BY A KLEINFELDER FIELD REPRESENTATIVE.
4. TEST PITS GA-TP-1 THROUGH GA-TP-11 WERE EXCAVATED ON 11/1/2007 AND 11/2/2007, USING A CATERPILLAR MODEL 430D BACKHOE OPERATED BY HIGH DESERT CONSTRUCTION. A GOLDER FIELD REPRESENTATIVE LOGGED THE TEST PITS AND COLLECTED SAMPLES OF MATERIALS FOR LABORATORY TESTING.

REFERENCES

1. TWO-FOOT CONTOUR BASE MAP PROVIDED BY KLEINFELDER IN JUNE 2008, CREATED FROM DRAWING BY ACCURATE SURVEY & ENGINEERING DATED 9/6/2007.
2. COORDINATES ARE PROVIDED IN A SCALED VERSION (ADJUSTED TO GROUND) OF THE COLORADO STATE PLANE (SOUTH ZONE) COORDINATE SYSTEM USING NAD83 AS THE HORIZONTAL DATUM.
3. ELEVATIONS PROVIDED ARE IN FEET ABOVE MEAN SEA LEVEL USING NAVD88 AS THE VERTICAL DATUM.
4. TABLES 2-1 AND 2-2 REFLECT THE PROPOSED DRILLING LOCATIONS. ACTUAL DRILLING LOCATIONS TYPICALLY VARY BY 5 FEET LATERALLY. THE COORDINATES AND ELEVATIONS LISTED FOR GA-BH-47 AND GA-BH-48 ARE ESTIMATIONS AS THEIR PROPOSED LOCATIONS WERE NOT SURVEYED.
5. ELEVATIONS LISTED IN TABLES 2-3 AND 2-4 ARE ESTIMATED BASED ON THE TOPOGRAPHY AT THE I.D. LOCATION.

REV	DATE	DES	REVISION DESCRIPTION	CADD	CHK	RVW
1	10/8/08	KFM	ISSUED FOR DESIGN REPORT	JWR	KFM	JMJ

PROJECT

ENERGY FUELS RESOURCES CORPORATION
PIÑON RIDGE PROJECT - EVAPORATION PONDS
MONTROSE COUNTY, COLORADO

TITLE

GENERAL PROJECT LAYOUT AND LOCATIONS OF GEOTECHNICAL INVESTIGATIONS

Golder Associates
DENVER, COLORADO

PROJECT No.	073-81694		FILE No.	07381694A045	
DESIGN	JDE	02/08	SCALE AS SHOWN	REV.	A
CADD	JDE	02/08	DRAWING		
CHECK	KFM	02/08	2		
REVIEW	JMJ	02/08			

Dwg. Name: N:\073-81694\07381694A045.dwg
Layout Name: 24x36 Landscape Machine: IENT-L-JELLIOT1
Last Update: Oct 07, 2008 08:45 By: JEllott
Last Plot: Oct 07, 2008 08:45 By: JEllott

Plot Time: 10/07/08 08:45

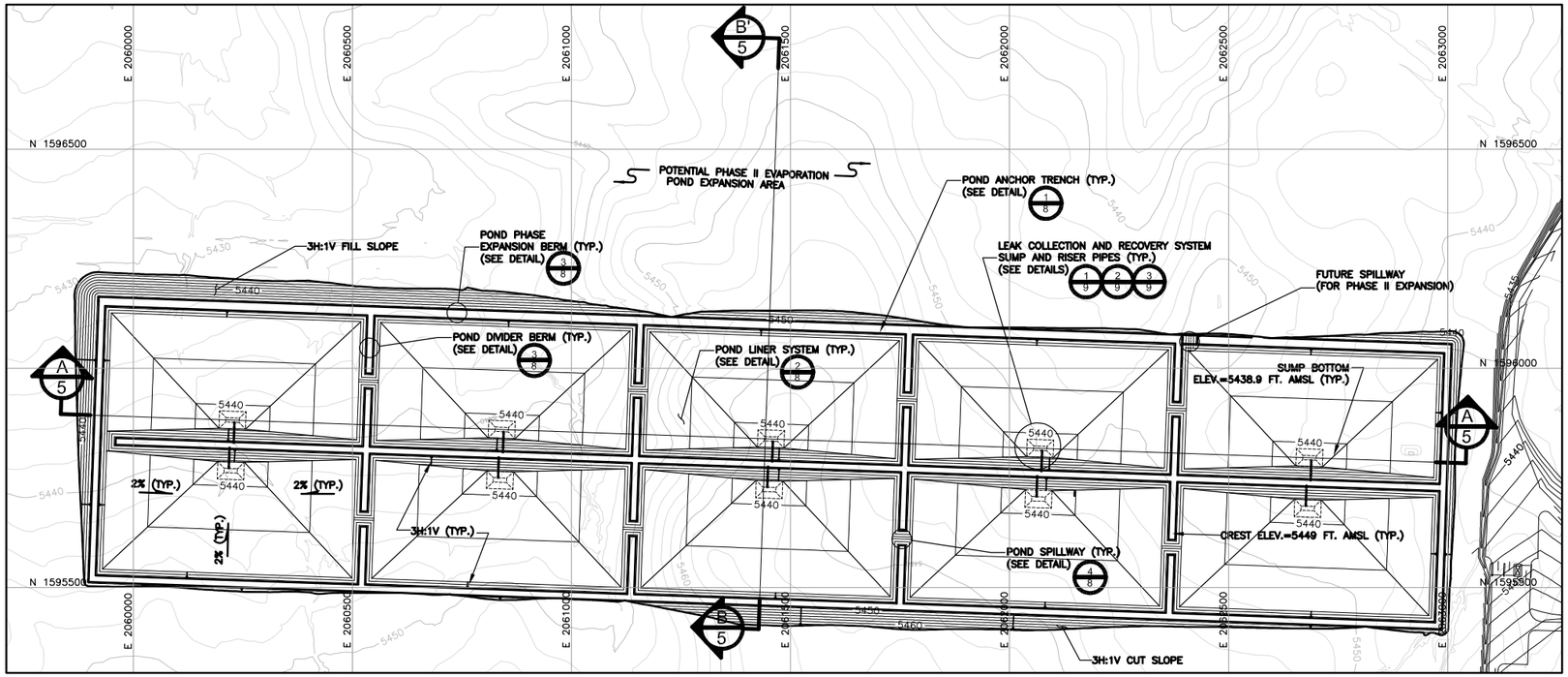

1/3 PHASE I EVAPORATION POND GRADING PLAN

SCALE: 1 IN.= 150 FT.

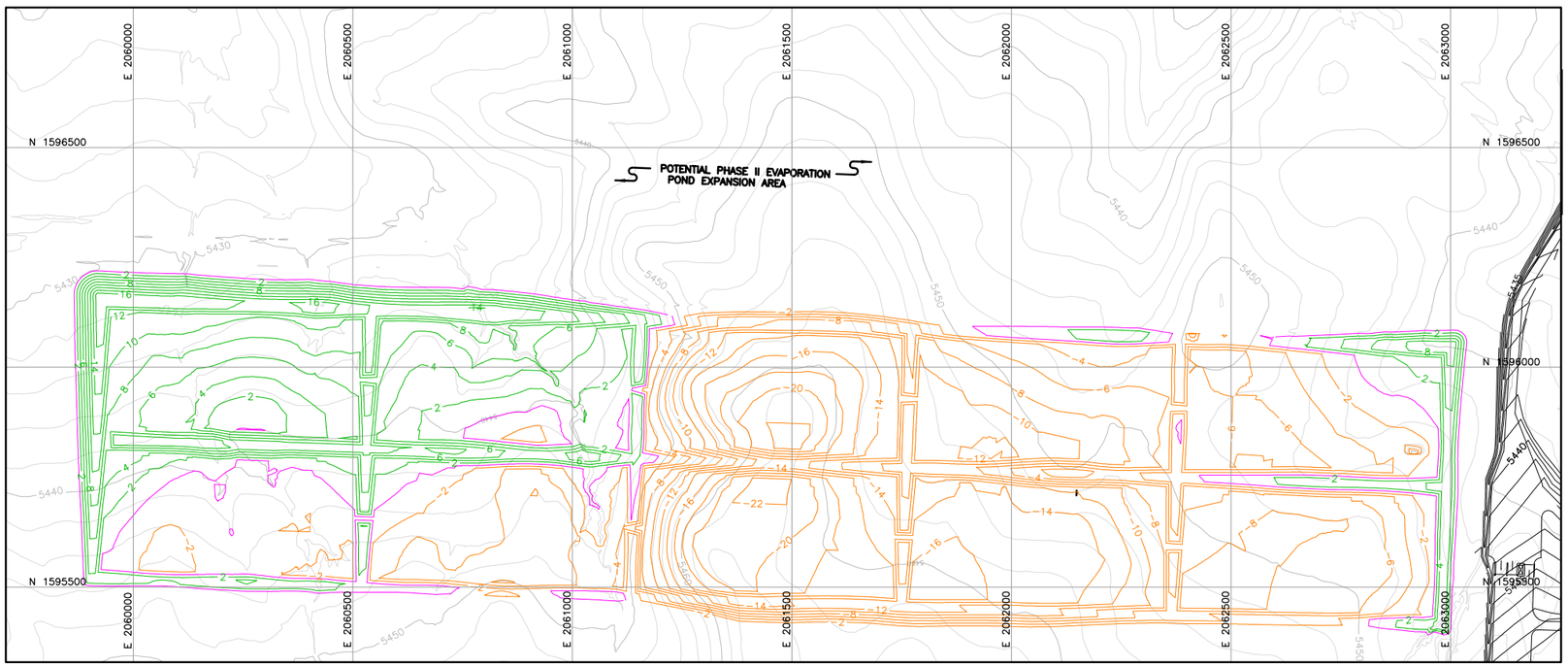

2/3 PHASE I EVAPORATION POND ISOPACH PLAN

SCALE: 1 IN.= 150 FT.

LEGEND

- EXISTING GROUND TOPOGRAPHY (SEE REFERENCE 1)
- PROPOSED FINISHED GRADE TOPOGRAPHY
- TOE / CREST — SLOPE DIRECTION
- ISOPACH CUT CONTOUR
- ISOPACH FILL CONTOUR
- ISOPACH ZERO CONTOUR
- EXISTING FENCE LINE
- LCRS RISER PIPES
- LCRS SUMP BASE GRADING
- A / 5 — CROSS SECTION IDENTIFIER; SHEET WHERE SECTION IS LOCATED

QUANTITIES

	CUT (CU. YDS.)	FILL (CU. YDS.)
EVAPORATION PONDS PHASE I GRADING	460,000	139,000

NOTES

1. GRADING PLAN CONTOURS REPRESENT TOP OF GEOMEMBRANE WITHIN THE EVAPORATION PONDS AND TOP OF STRUCTURAL FILL OUTSIDE THESE LIMITS.

REFERENCES

1. TWO-FOOT CONTOUR BASE MAP PROVIDED BY KLEINFELDER IN JUNE 2008, CREATED FROM DRAWING BY ACCURATE SURVEY & ENGINEERING DATED 9/6/2007.

150 0 150 300
1" = 150' Feet

REV	DATE	DES	REVISION DESCRIPTION	CADD	CHK	RVW
A	10/8/08	KFM	ISSUED FOR DESIGN REPORT	JWR	KFM	JMJ

PROJECT
ENERGY FUELS RESOURCES CORPORATION
PIÑON RIDGE PROJECT - EVAPORATION PONDS
MONTROSE COUNTY, COLORADO

TITLE
PHASE I EXCAVATION GRADING PLAN AND ISOPACH

Golder Associates
DENVER, COLORADO

PROJECT No.	073-81694		FILE No.	07381694A057
DESIGN	GG	03/08	SCALE AS SHOWN	REV. A
CADD	JWR	03/08	DRAWING	3
CHECK	KFM	03/08		
REVIEW	JMJ	03/08		

Dwg Name: N:\073-81694\07381694A057.dwg
Layout Name: 24x36 Landscape Machine: DENT-L-JELLOTT
Last Update By: 2008-08-06 By: pavents
Last Plot: Oct 07, 2008 08:50 By: ejelott

Plot Time:10/07/08 08:50

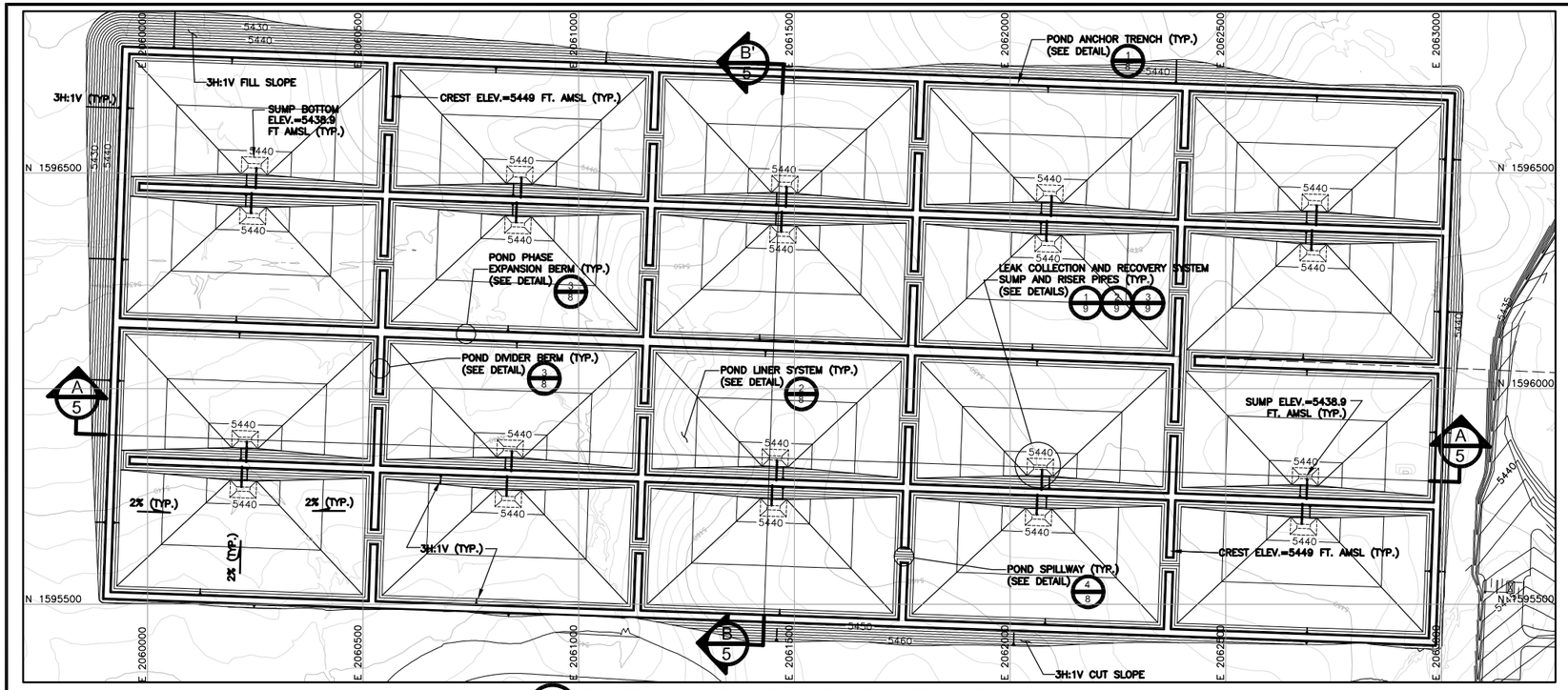

1/4 PHASE I AND II EVAPORATION POND GRADING PLAN

SCALE: 1 IN.= 150 FT.

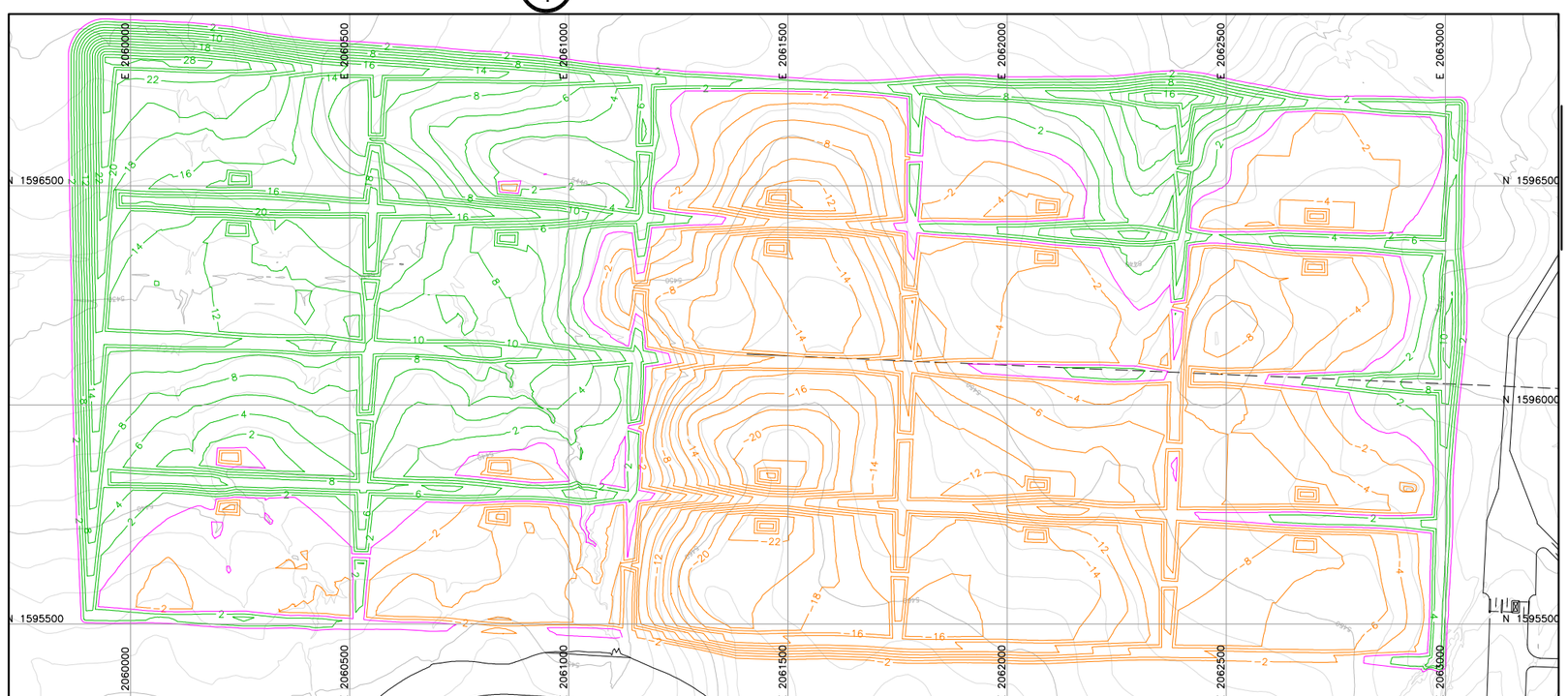

2/4 PHASE I AND II EVAPORATION POND ISOPACH PLAN

SCALE: 1 IN.= 150 FT.

LEGEND

- EXISTING GROUND TOPOGRAPHY (SEE REFERENCE 1)
- PROPOSED FINISHED GRADE TOPOGRAPHY
- TOE / CREST — SLOPE DIRECTION
- ISOPACH CUT CONTOUR
- ISOPACH FILL CONTOUR
- ISOPACH ZERO CONTOUR
- EXISTING FENCE LINE
- LCRS RISER PIPES
- LCRS SUMP BASE GRADING
- A / 8 — CROSS SECTION IDENTIFIER; SHEET WHERE SECTION IS LOCATED

NOTES

1. GRADING PLAN CONTOURS REPRESENT TOP OF GEOMEMBRANE WITHIN THE EVAPORATION PONDS AND TOP OF STRUCTURAL FILL OUTSIDE THESE LIMITS.

REFERENCES

1. TWO-FOOT CONTOUR BASE MAP PROVIDED BY KLEINFELDER IN JUNE 2008, CREATED FROM DRAWING BY ACCURATE SURVEY & ENGINEERING DATED 9/6/2007.

QUANTITIES

	CUT (CU. YDS.)	FILL (CU. YDS.)
EVAPORATION PONDS PHASE I GRADING	460,000	139,000
EVAPORATION PONDS PHASE II GRADING	174,000	426,000

150 0 150 300
1" = 150' Feet

REV	DATE	DES	REVISION DESCRIPTION	CADD	CHK	RVW
1	10/8/08	KFM	ISSUED FOR DESIGN REPORT	JWR	KFM	JMJ

PROJECT
ENERGY FUELS RESOURCES CORPORATION
PIÑON RIDGE PROJECT - EVAPORATION PONDS
MONTROSE COUNTY, COLORADO

TITLE
PHASE II EXCAVATION GRADING PLAN AND ISOPACH

Golder Associates
DENVER, COLORADO

PROJECT No.		073-81694	FILE No.	07381694A056
DESIGN	GG	03/08	SCALE AS SHOWN	REV. A
CADD	JWR	03/08	DRAWING	4
CHECK	KFM	03/08		
REVIEW	JMJ	03/08		

Dwg Name: N:\07\073-81694\07381694A056.dwg
Layout Name: 24x36 Landscape Machine: DENT-L-JELLIOT1
Last Update: Sep 30, 2008 3:20:46 By: jsevents
Last Plot: Oct 07, 2008 08:52 By: ejelliot

Plot Time:10/07/08 08:52

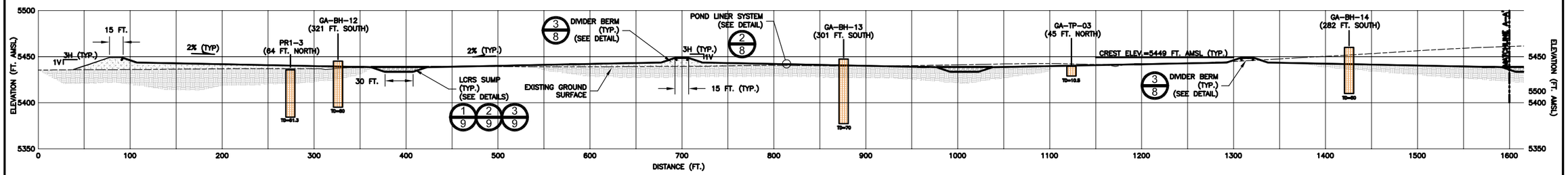

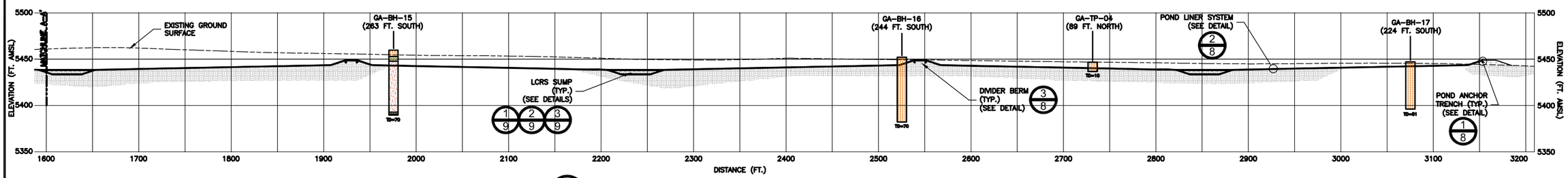

A/5 EVAPORATION POND CROSS SECTION A-A'

SCALE: 1 IN.= 50 FT.

50 0 50
1" = 50' Feet

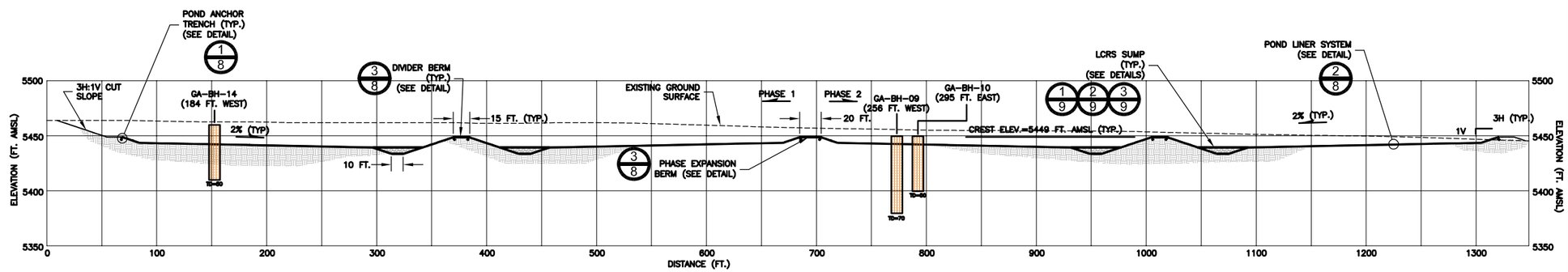

B/5 EVAPORATION POND CROSS SECTION B-B'

SCALE: 1 IN.= 50 FT.

50 0 50
1" = 50' Feet

LEGEND

- EXISTING GROUND SURFACE
- REGRADED SURFACE
- LINER SURFACE
- DETAIL IDENTIFIER (2/8) — SHEET WHERE DETAIL IS LOCATED
- PREPARED SUBGRADE OR EXISTING SUBGRADE
- STRUCTURAL FILL
- LEAK DETECTION FILL
- GA-BH-14 (184 FT. WEST) — BORING/TEST PIT DESIGNATION; OFFSET FROM SECTION LINE
- SIMPLIFIED GEOLOGY
- 15-100 — TOTAL DEPTH OF INVESTIGATION (FEET)
- OVERBURDEN SOILS: CONSISTING PRIMARILY OF LOESS, SOIL CLASSIFIES AS SILTY SAND (SM) AND LEAN SILT (ML) WITH OCCASIONAL LAYERS OF LEAN CLAY (CL), CLAYEY SAND (SC), AND SILTY GRAVEL (GM). BLOW COUNTS FOR 12 INCHES OF PENETRATION TYPICALLY RANGED FROM 10 TO 50 NEAR THE SURFACE (0–10 FT.) AND GREATER THAN 50 BELOW 10 FEET DUE TO SOIL CEMENTATION.
- CLAYSTONE: PREDOMINATELY HERMOSA FORMATION, OCCASIONAL MOENKOPI FORMATION – MODERATELY TO HIGHLY WEATHERED, VERY STIFF TO HARD, OLIVE COLORED, TYPICALLY INTENSELY AND IRREGULARLY FRACTURED.
- GYPSUM: HERMOSA FORMATION, PARADOX MEMBER – FRESH TO SLIGHTLY WEATHERED, VERY WEAK TO WEAK, MOTTLED IN COLOR (BLACK, GRAY, AND WHITE).
- SANDSTONE/SILTSTONE: MOENKOPI AND CUTLER FORMATIONS – SLIGHTLY TO HIGHLY WEATHERED, VERY WEAK TO MEDIUM STRONG, FINE TO VERY FINE GRAINED SAND.

REFERENCES

1. TWO–FOOT CONTOUR BASE MAP PROVIDED BY KLEINFELDER IN JUNE 2008, CREATED FROM DRAWING BY ACCURATE SURVEY & ENGINEERING DATED 9/6/2007.

REV	DATE	DES	REVISION DESCRIPTION	CADD	CHK	RVW
A	10/8/08	KFM	ISSUED FOR DESIGN REPORT	JWR	KFM	JMJ

PROJECT
ENERGY FUELS RESOURCES CORPORATION
PIÑON RIDGE PROJECT - EVAPORATION PONDS
MONTROSE COUNTY, COLORADO

TITLE
EVAPORATION POND TYPICAL SECTIONS

Golder Associates
DENVER, COLORADO

PROJECT No.		073-81694	FILE No.	07381694A067
DESIGN	GG	03/08	SCALE AS SHOWN	REV. A
CADD	JWR	03/08	DRAWING	
CHECK	KFM	03/08	5	
REVIEW	JMJ	03/08		

Plot Time: 10/07/08 08:55

Dwg Name: N:\07\073-81694\07381694A067.dwg
Layout Name: 24x36 Landscape Machine: DEN1-L-JELLO11
Last Plotted: Oct 07, 2008-08:55 By: jellott
Last Plot: Oct 07, 2008-08:55 By: jellott

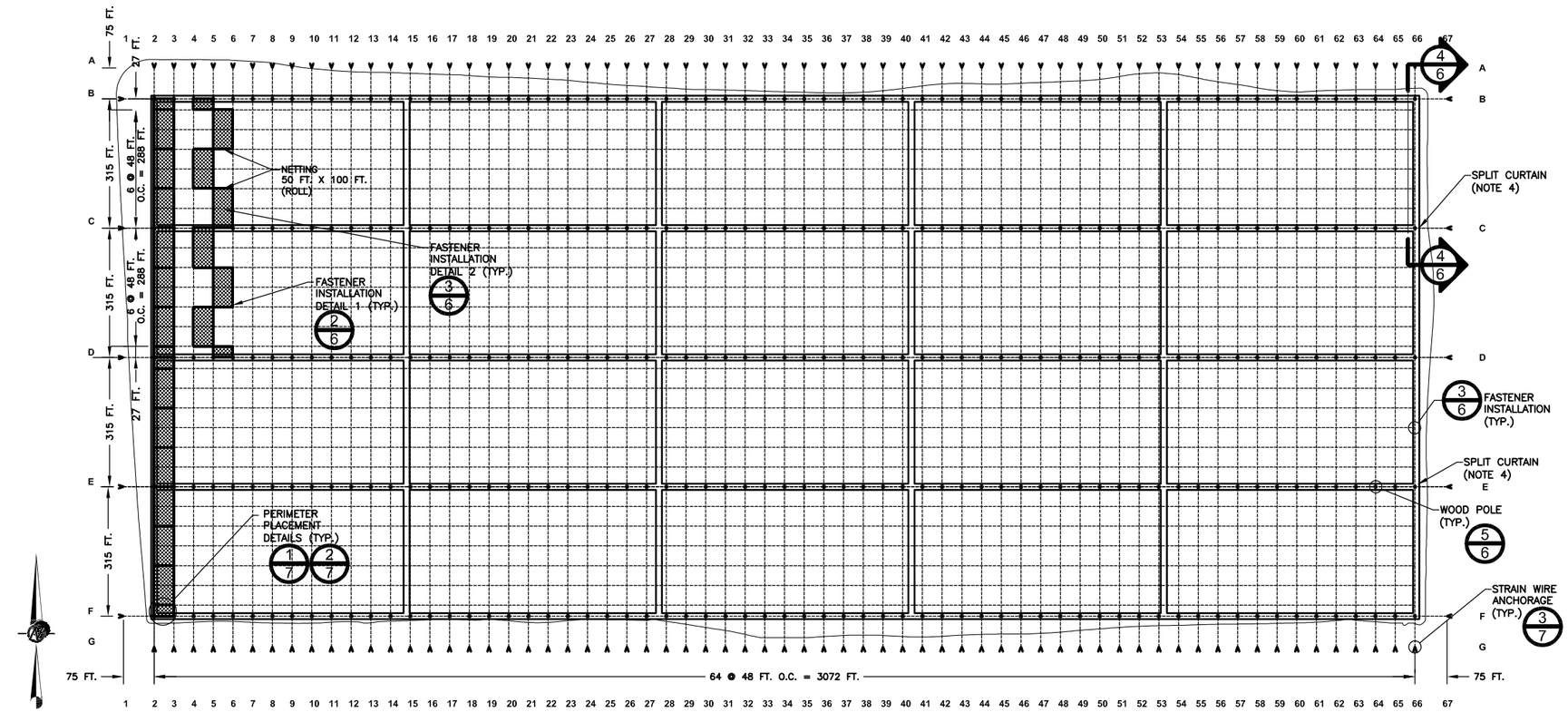

1/6 PLAN VIEW, NETTING PLACEMENT ORIENTATION

1"=150'

150 0 150 300
1" = 150' Feet

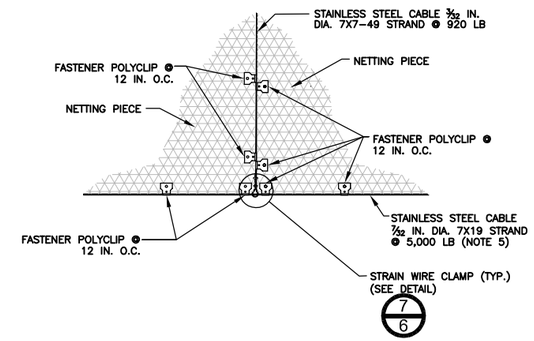

2/6 FASTENER INSTALLATION DETAIL 1

N.T.S.

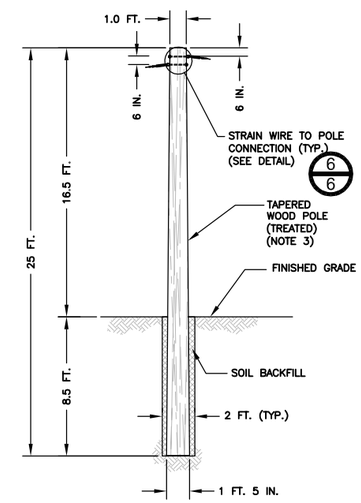

5/6 WOOD POLE DETAIL

N.T.S.

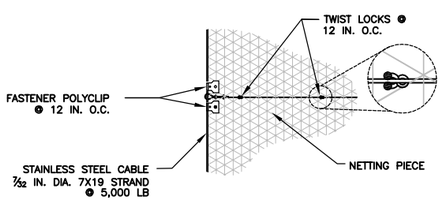

3/6 FASTENER INSTALLATION DETAIL 2

N.T.S.

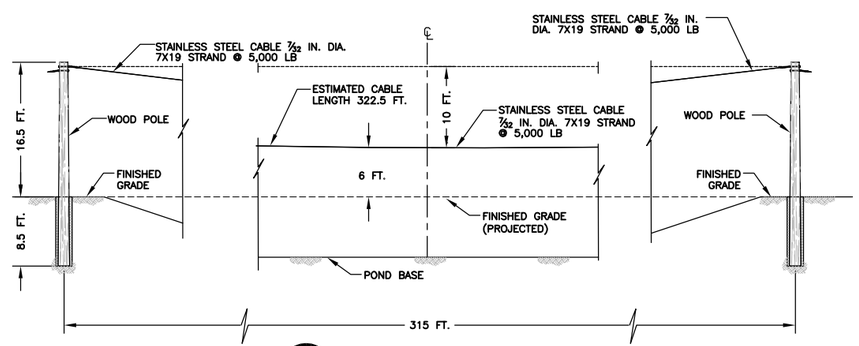

4/6 STRAIN WIRE DISPLACEMENT

N.T.S.

NOTES

1. THE EDGES OF THE NETTING SHALL BE ROLLED AT LEAST 2 TIMES TO ALLOW POLYCLIP TEETH TO GRIP SUFFICIENT NETTING.
2. NETTING PROVIDED WITH 2-INCH OPENINGS.
3. WOOD POLES TO BE TREATED PER THE PROJECT SPECIFICATIONS.
4. PROVIDE SPLIT CURTAINS AT OUTSIDE PERIMETER OF CENTRAL BERMS TO FACILITATE ATV ACCESS.
5. EPOXY-COAT STAINLESS STEEL SUPPORT CABLES.

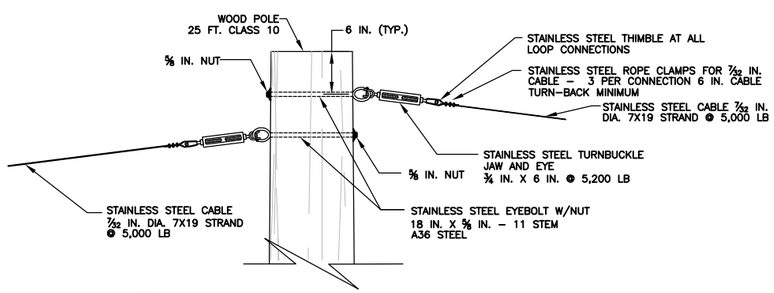

6/6 STRAIN WIRE TO POLE CONNECTION DETAIL

N.T.S.

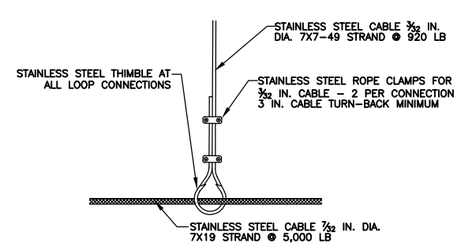

7/6 STRAIN WIRE CLAMPING DETAIL

N.T.S.

REV	DATE	DES	REVISION DESCRIPTION	CADD	CHK	RVW
A	10/8/08	KFM	ISSUED FOR DESIGN REPORT	JWR	KFM	JMJ

PROJECT
ENERGY FUELS RESOURCES CORPORATION
PIÑON RIDGE PROJECT - EVAPORATION PONDS
MONTROSE COUNTY, COLORADO

TITLE
BIRD NETTING PLAN AND DETAILS

Golder Associates
DENVER, COLORADO

PROJECT No.	073-81694		FILE No.	07381694A066
DESIGN	EF	04/08	SCALE AS SHOWN	REV. A
CADD	EF	04/08	6	
CHECK	KFM	04/08		
REVIEW	JMJ	04/08		

Plot Time:10/07/08 08:58

Dwg Name: N:\073-81694\07381694A066.dwg
Layout Name: DWG6 Machine: DEN1-L-JELLIOT1
Last Modified: Oct 07, 2008 08:18 By: jelliott
Last Plot: Oct 07, 2008 08:58 By: jelliott

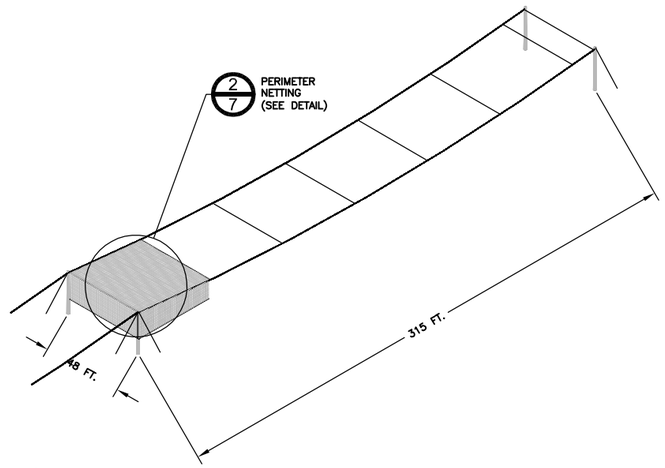

1/7 WOOD POLE LOCATION AND NETTING PLACEMENT PARTIAL VIEW
N.T.S.

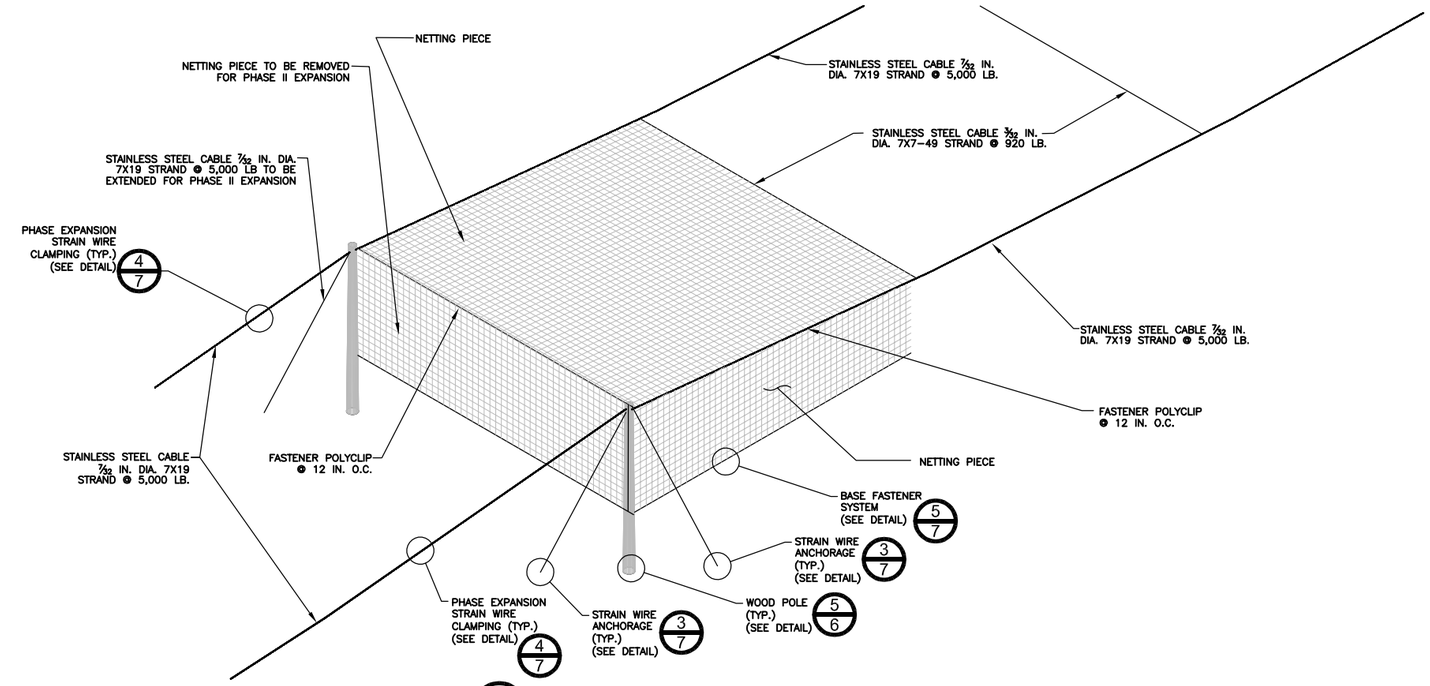

2/7 PERIMETER NETTING PLACEMENT DETAIL
N.T.S.

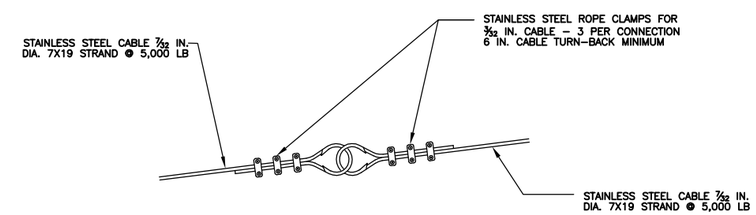

4/7 STRAIN WIRE CLAMPING DETAIL FOR PHASE II EXPANSION
N.T.S.

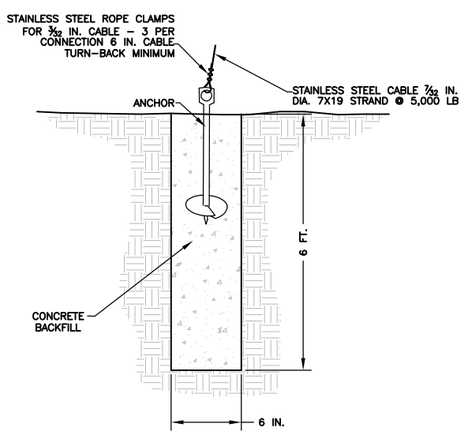

3/7 STRAIN WIRE ANCHORAGE
N.T.S.

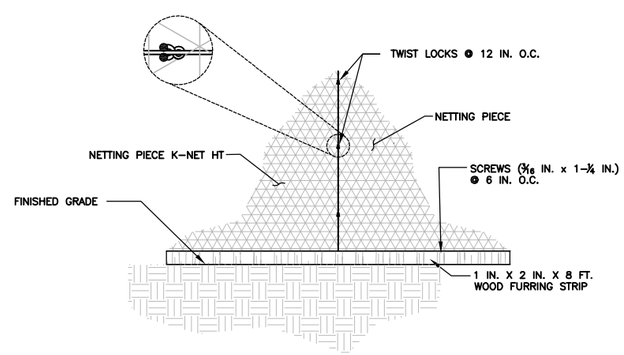

5/7 BIRDNET BASE FASTENER SYSTEM
N.T.S.

REV	DATE	DES	REVISION DESCRIPTION	CADD	CHK	RVW
1	10/8/08	KFM	ISSUED FOR DESIGN REPORT	JWR	KFM	JMJ

PROJECT
ENERGY FUELS RESOURCES CORPORATION
PIÑON RIDGE PROJECT - EVAPORATION PONDS
MONTROSE COUNTY, COLORADO

TITLE
BIRD NETTING DETAILS

Golder Associates
DENVER, COLORADO

PROJECT No.		073-81694	FILE No.	07381694A066
DESIGN	EF	04/08	SCALE AS SHOWN	REV. A
CADD	EF	04/08	7	
CHECK	KFM	04/08		
REVIEW	JMJ	04/08		

Plot Time: 10/07/08 08:57

Dwg Name: N:\07\073-81694\07381694A066.dwg
Layout Name: DWG7 Machine: DEN1-L-ELLIOTT
Last Update: Oct 7, 2008 15:16 By: jroberts
Last Plot: Oct 07, 2008 08:57 By: jjelliott

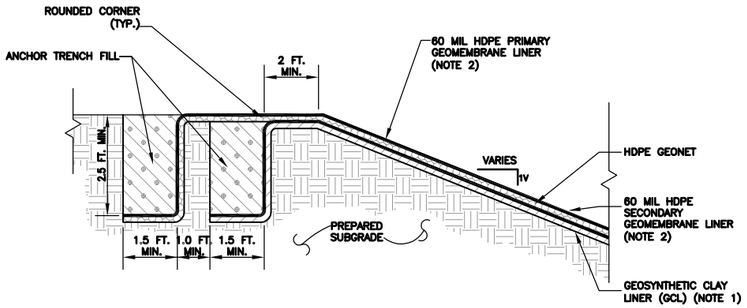

1/8 POND LINER ANCHOR TRENCH DETAIL
N.T.S.

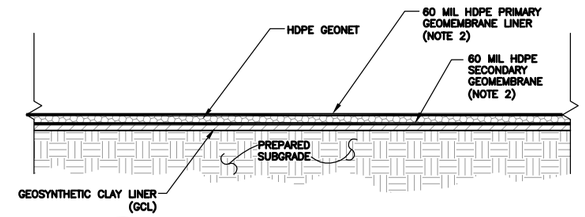

2/8 POND LINER DETAIL
N.T.S.

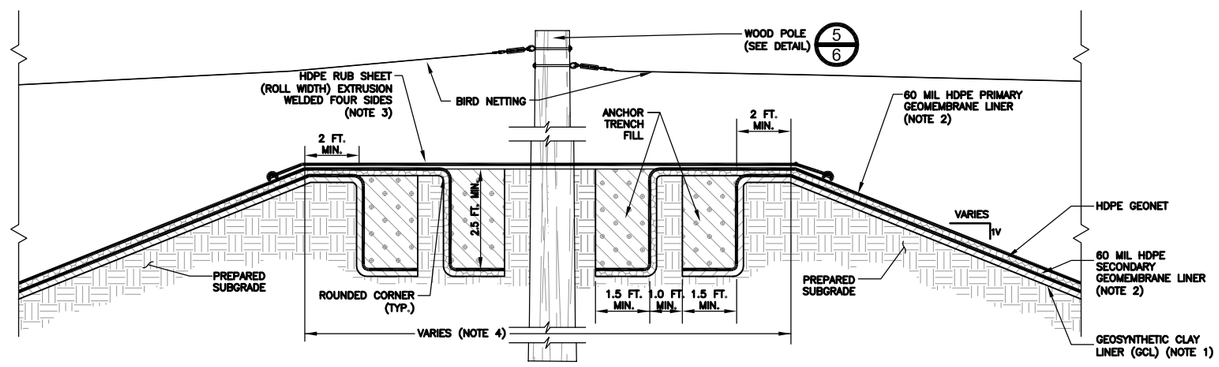

3/8 DIVIDER BERM DETAIL
N.T.S.

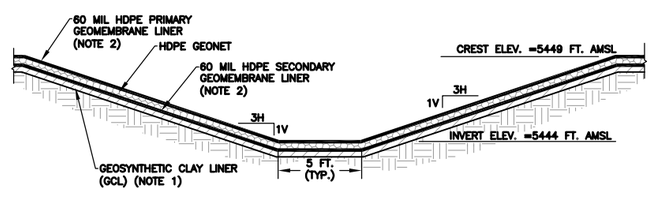

4/8 POND SPILLWAY DETAIL
N.T.S.

NOTES

1. USE BENTOMAT ST OR APPROVED EQUIVALENT REINFORCED GCL AS THE UNDERLINER COMPONENT OF THE SECONDARY COMPOSITE LINER, WOVEN SIDE UP.
2. PRIMARY AND SECONDARY GEOMEMBRANE LINERS SHALL CONSIST OF SMOOTH BLACK HIGH DENSITY POLYETHYLENE GEOMEMBRANE. PRIMARY GEOMEMBRANE SHALL BE CONDUCTIVE TO FACILITATE SPARK TESTING.
3. RUBSHEET SHALL CONSIST OF SINGLE-SIDED TEXTURED HDPE GEOMEMBRANE (TEXTURED SIDE UP). GEOMEMBRANE SHALL BE BOOTED (I.E. SEALED) AT THE BASE OF THE WOOD POLE SUPPORTS.
4. DIVIDER BERM SHALL BE CONSTRUCTED WITH A MINIMUM WIDTH OF 15 FT. EXCEPT AT THE NORTHERN PERIMETER OF PHASE I WHICH SHALL BE CONSTRUCTED WITH A MINIMUM WIDTH OF 20 FT.

REV	DATE	DES	REVISION DESCRIPTION	CADD	CHK	RVW
1	10/8/08	KFM	ISSUED FOR DESIGN REPORT	JWR	KFM	JMJ

PROJECT
ENERGY FUELS RESOURCES CORPORATION
PIÑON RIDGE PROJECT - EVAPORATION PONDS
MONTROSE COUNTY, COLORADO

TITLE
EVAPORATION POND LINER DETAILS

Golder Associates
DENVER, COLORADO

PROJECT No.		073-81694	FILE No.	07381694A059
DESIGN	JDE	10/07	SCALE AS SHOWN	REV. A
CADD	JDE	10/07	DRAWING	
CHECK	KFM	10/07	8	
REVIEW	JMJ	10/07		

Plot Time: 10/07/08 09:00

Dwg Name: N:\07\073-81694\07381694A059.dwg
Layout Name: 24x36 Landscape Machine: DEN1-L-JELLIOT1
Last Update: Sep 30, 2008 16:54 By: jroberts
Last Plot: Oct 07, 2008 09:00 By: JElliott

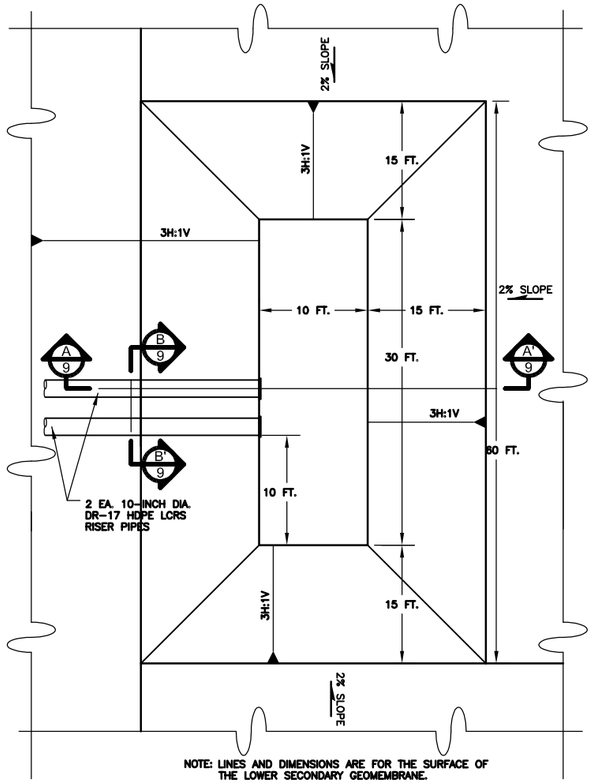

NOTE: LINES AND DIMENSIONS ARE FOR THE SURFACE OF THE LOWER SECONDARY GEOMEMBRANE.

1/9 LCRS SUMP PLAN
N.T.S.

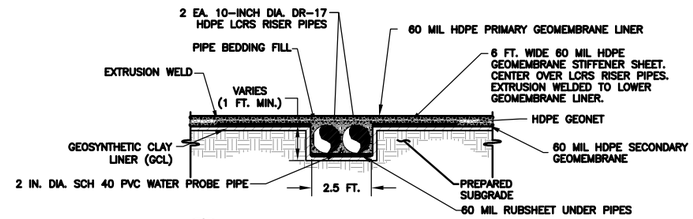

B/9 LCRS RISER PIPE SECTION B-B'
N.T.S.

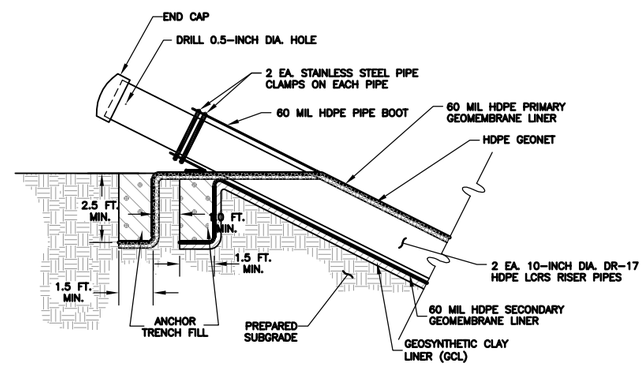

2/9 LCRS RISER OUTLET DETAIL
N.T.S.

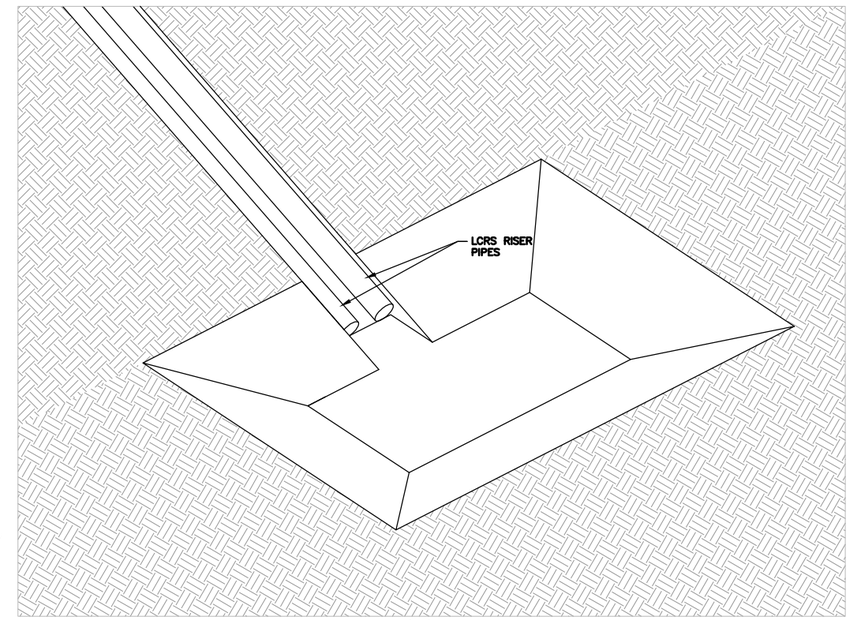

3/9 LCRS SUMP ISOMETRIC VIEW
N.T.S.

NOTES

1. MOBILE PUMP FOR LEAK COLLECTION AND RECOVERY SYSTEM TO BE SUPPLIED BY OTHERS.

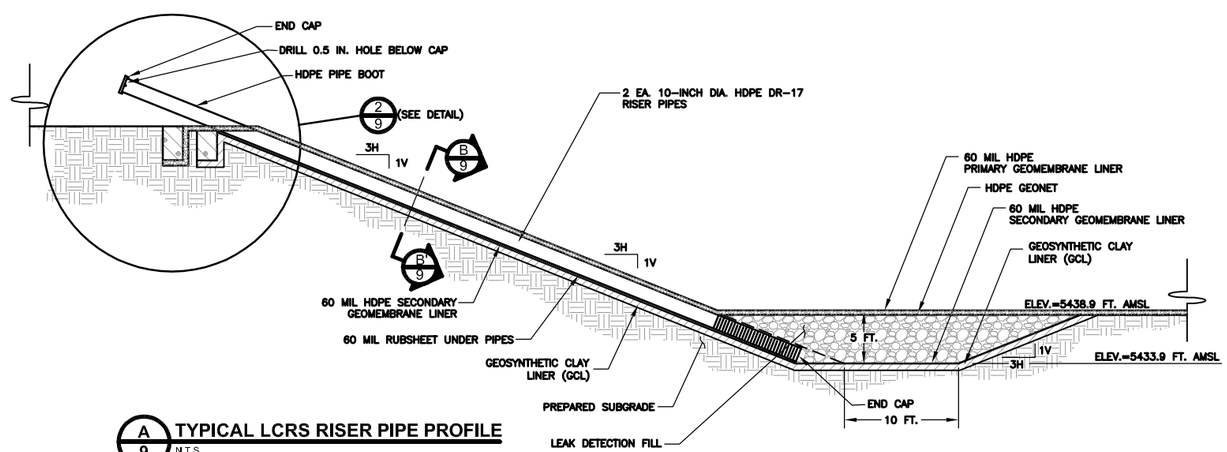

A/9 TYPICAL LCRS RISER PIPE PROFILE
N.T.S.

REV	DATE	DES	REVISION DESCRIPTION	CADD	CHK	RVW
A	10/08/08	KFM	ISSUED FOR DESIGN REPORT	JWR	KFM	JMJ

PROJECT
ENERGY FUELS RESOURCES CORPORATION
PIÑON RIDGE PROJECT - EVAPORATION PONDS
MONTROSE COUNTY, COLORADO

TITLE
LEAK COLLECTION AND RECOVERY SYSTEM SECTIONS AND DETAILS

Golder Associates
DENVER, COLORADO

PROJECT No.		073-81694	FILE No.	07381694A060
DESIGN	JDE	02/08	SCALE AS SHOWN	REV. A
CADD	JDE	02/08	DRAWING 9	
CHECK	KFM	02/08		
REVIEW	JMJ	02/08		

Plot Time: 10/07/08 09:02

Dwg Name: N:\07\073-81694\07381694A060.dwg
Layout Name: 9x16.50 Landscape Modelspace: DEN1-L-JEL1071
Last Mod: Sep 30, 2008 10:28:06am By: Jeffrey Ellis
Last Plot: Oct 07, 2008 09:02 By: Kevin