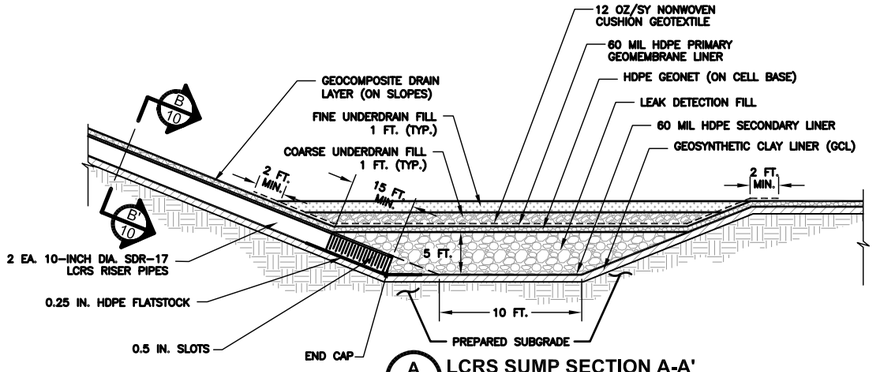


A 10 LCRS SUMP SECTION A-A'
N.T.S.

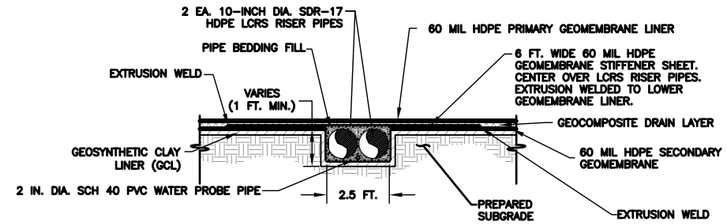


B 10 LCRS RISER PIPE SECTION B-B'
N.T.S.

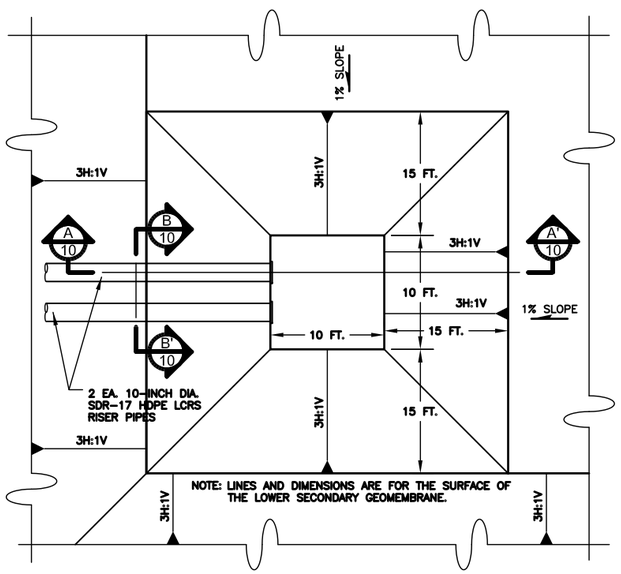


1 10 LCRS SUMP PLAN
N.T.S.

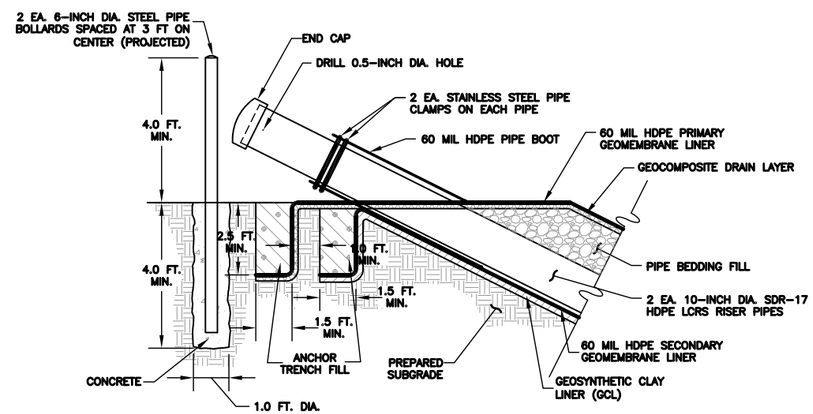


2 10 LCRS RISER OUTLET DETAIL
N.T.S.

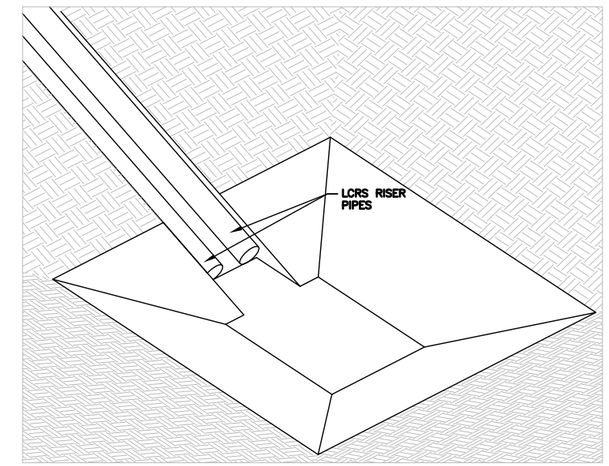


3 10 LCRS SUMP ISOMETRIC VIEW
N.T.S.

## NOTES

1. PUMP FOR LEAK COLLECTION AND RECOVERY SYSTEM TO BE SUPPLIED BY OTHERS. COLLECTED SOLUTIONS TO BE RETURNED TO TAILINGS CELL.

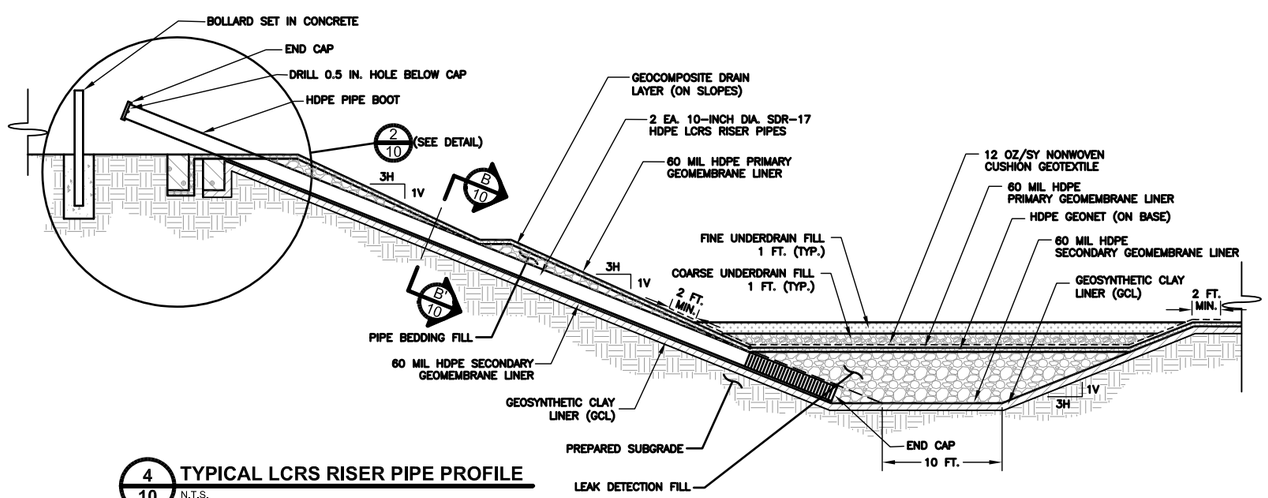


4 10 TYPICAL LCRS RISER PIPE PROFILE
N.T.S.

| REV | DATE | DES | REVISION DESCRIPTION | CADD | CHK | RVW |
|---|---|---|---|---|---|---|
| A | 10/8/08 | KFM | ISSUED FOR DESIGN REPORT | JWR | KFM | JMJ |

PROJECT
ENERGY FUELS RESOURCES CORPORATION
PIÑON RIDGE PROJECT - TAILINGS CELL DESIGN
MONTROSE COUNTY, COLORADO

TITLE
# LEAK COLLECTION AND RECOVERY SYSTEM SECTIONS AND DETAILS

Golder Associates
DENVER, COLORADO

| | | | | |
|---|---|---|---|---|
| PROJECT No. | | 073-81694 | FILE No. | 07381694A041 |
| DESIGN | JDE | 02/08 | SCALE AS SHOWN | REV. A |
| CADD | JDE | 02/08 | DRAWING | |
| CHECK | KFM | 05/08 | 10 | |
| REVIEW | JMJ | 05/08 | | |

Dwg Name: N:\073-81694\07381694A041.dwg
Last Update: Sep 30, 2008 13:24 By: JEBolt
Last Plot: Oct 03, 2008 10:09 By: WAllface

Plot Time:10/03/08 10:09