APPENDIX A

988H

Wheel Loader

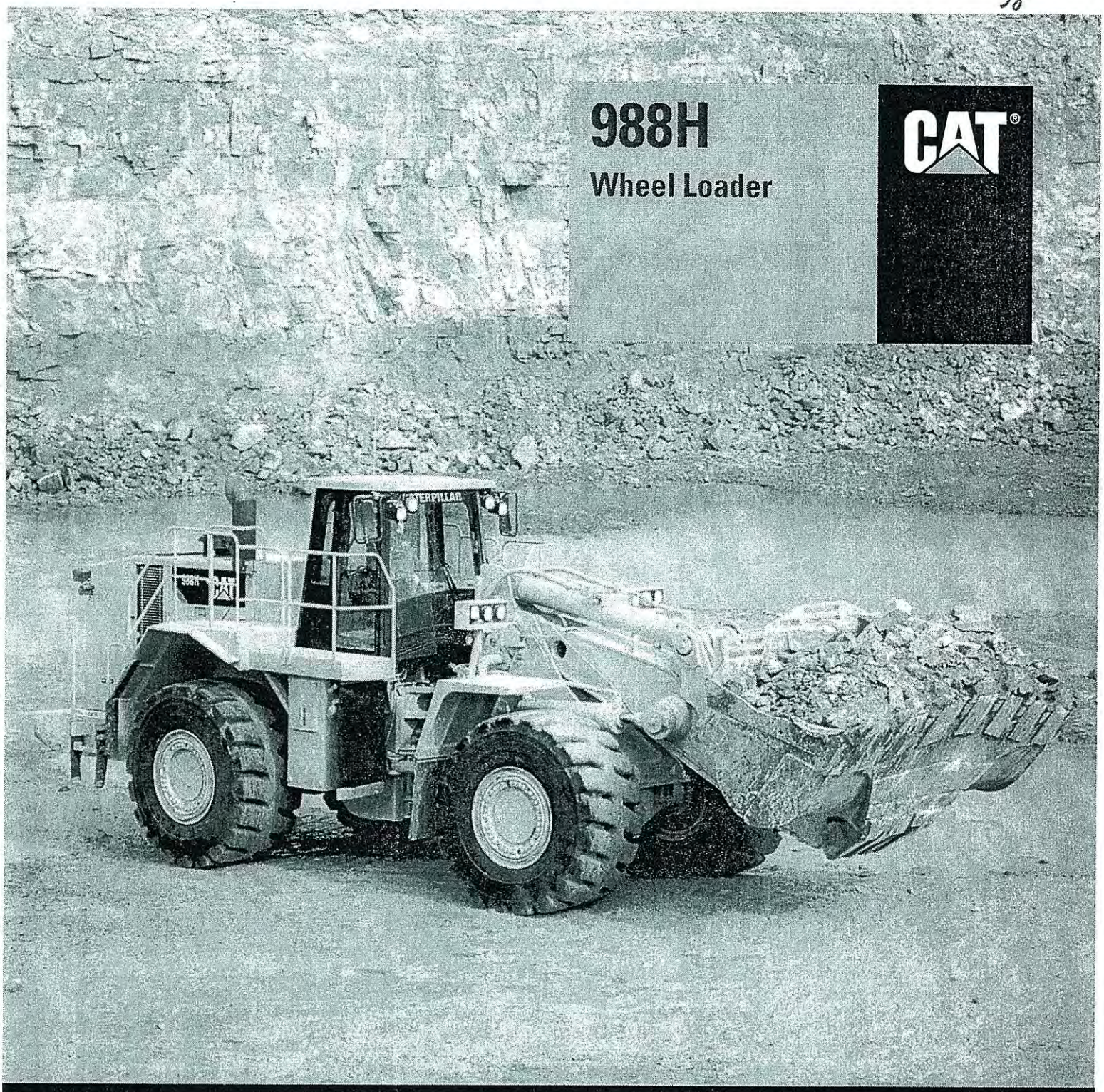

Engine		
Engine Model	Cat® C18 ACERT®	
Gross Power	414 kW	555 hp
Flywheel Power	373 kW	501 hp
Operating Specifications		
Operating Weight	49 546 kg	109,249 lb
Rated Payload	11.4 tonnes	12.5 tons
Buckets		
Bucket Capacities	6.3 m^3–7.0 m^3	8.2 yd^3–9.2 yd^3

39

CATERPILLAR®

United States / Canada [change] Find A Dealer Contact

Search

HOME PRODUCTS SERVICES INDUSTRIES CAREERS ABOUT CAT

English

Products › Machines › Wheel Loaders

Compact Equipment

Machines

- » Articulated Trucks
- » Backhoe Loaders
- » Cold Planers
- » Compactors
- » Feller Bunchers
- » Forest Machines
- » Forwarders
- » Harvesters
- » Hydraulic Excavators
- » Industrial Loaders
- » Knuckleboom Loaders
- » Lift Trucks
- » Material Handlers
- » Motor Graders
- » Multi Terrain Loaders
- » Off-Highway Tractors
- » Off-Highway Trucks
- » Paving Equipment
- » Pipelayers
- » Road Reclaimers
- » Scrapers
- » Skidders
- » Skid Steer Loaders
- » Telehandlers
- » Track Loaders
- » Track-Type Tractors
- » Underground Mining
- » Wheel Dozers
- » Wheel Excavators
- » Wheel Loaders

Work Tools
Engines
Power Generation
Rental Power
Turbines
Parts
Used Equipment
Electronics
OEM Solutions
Technology
Gifts & Apparel

988H WHEEL LOADER

-- Select a Model --

Overview | Specifications | Benefits & Features | Standard / Optional Equipment | Attachments | Machine Comparison

OVERVIEW

988H Wheel Loader

Revolutionary design, Caterpillar quality.
Electro-hydraulic controls, increased power and torque rise, front linkage and unmatched operator comfort work together for increased performance and added durability to make the 988H an innovative, 21st Century large wheel loader geared for maximum production in the toughest conditions.

SPECIFICATIONS

	Units: US | Metric
Net Power	501 hp
Operating Weight	109249 lb
Bucket Capacities	6.3 m3 - 7.0 m3 (8.2 yd3 - 9.2 yd3)

ATTACHMENTS

Block Handling Quick Couplers

Coal Buckets

General Purpose Buckets - Loader

Heavy-Duty Quarry Rock Buckets - Loader

BENEFITS & FEATURES

Structures and Fabricated Box Boom
Superior design of structures, along with the bold, box-section front linkage provide superior strength.
» Learn More

Power Train
The Cat power train delivers top performance and durability in tough applications. Changes to the aftercooler, injectors, bearings and pistons help improve startability, response, power, emissions and fuel consumption.
» Learn More

Hydraulics and Electronic Monitoring
Efficient, well-balanced hydraulics and low-effort electronic controls mean high performance and exceptional durability.
» Learn More

BUILD & QUOTE
Configure your machine and get a price estimate
» Launch Application

Locate Your Dealer
Get in touch with your local dealer for more information.
» Locate Your Dealer

988H Wheel Loader
» Download Product Brochure (PDF 1.8m)
Get Adobe Reader

Newsfeeds © 2008 Caterpillar All Rights Reserved Legal Notices Site Map Print Version Contact

Dimensions

All dimensions are approximate.

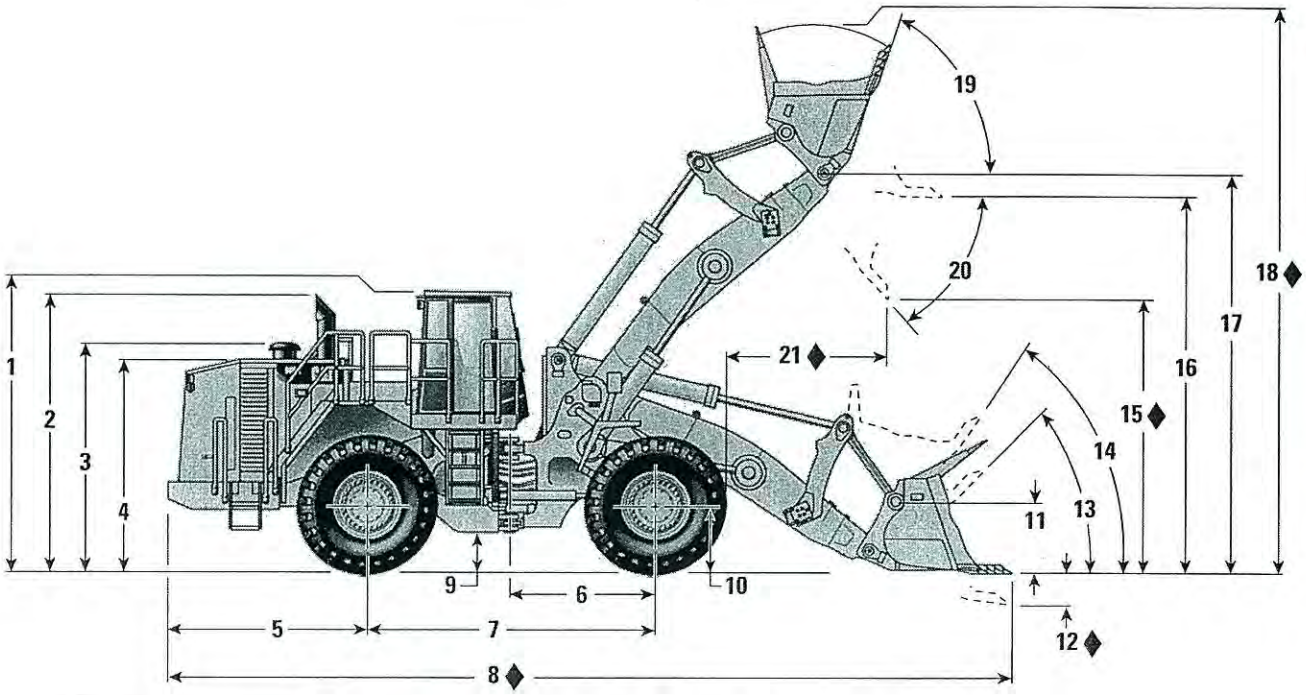

4.25 Meter Linkage

◆ Dimensions vary with bucket. Refer to Operation/Bucket Specifications.

1	Height to Top of Cab	4128 mm	13.54 ft
2	Height to Top of Exhaust Stacks	4112 mm	13.49 ft
3	Height to Top of Air Cleaner	3382 mm	11.1 ft
4	Height to Top of Hood	3156 mm	10.35 ft
5	Center Line of Rear Axle to Edge of Rear Bumper	3132 mm	10.28 ft
6	Center Line of Front Axle to Hitch	2275 mm	7.46 ft
7	Wheel Base Length	4550 mm	14.93 ft
8	Length with Bucket on Ground	◆	◆
9	Ground Clearance	549 mm	1.8 ft
10	Height to Center of Wheel	978 mm	3.21 ft
11	C-Pin Height	1009 mm 899 mm*	3.31 ft 2.95 ft*
12	Dig Depth	226 mm 195 mm*	0.74 ft 0.64 ft*

13	Rack Back Angle at Ground	47.8° 45.7°*	
14	Rack Back Angle at Carry	56.5° 54°*	
15	Clearance at Maximum Lift/Dump	3879 mm 3466 mm*	12.73 ft 11.37 ft*
16	Height to Spillguard	5432 mm 5019 mm*	17.82 ft 16.47 ft*
17	B-Pin Height	5853 mm 5440 mm*	19.2 ft 17.85 ft*
18	Overall Height with Bucket Raised	◆ ◆*	◆ ◆*
19	Rack Back Angle at Maximum Lift	65° 73°*	
20	Dump Angle at Maximum Lift	45° 45°*	
21	Reach	◆	◆

*3.88 Meter Linkage

Operation/Bucket Specifications

		3.88 Meter Linkage		
Bucket Type		**Spade Rock (Standard Bucket)**	**Wide Spade Rock**	**Spade Rock**
GET		**Teeth & Segments**	**Teeth & Segments**	**BOCE**
Rated Capacity	m^3 (yd^3)	6.4 (8.33)	6.9 (9.0)	6.9 (9.0)
Struck Capacity	m^3 (yd^3)	5.3 (6.9)	5.7 (7.5)	5.7 (7.5)
Heaped Capacity	m^3 (yd^3)	6.4 (8.33)	6.9 (9.0)	6.9 (9.0)
Bucket Width	mm (ft/in)	3810 (12'6")	3980 (13'1")	3964 (13'0")
Overall Height	mm (ft/in)	7699 (25'3")	7772 (25'6")	7772 (25'6")
Dump Clearance at 45° dump				
Bare	mm (ft/in)	3742 (12'3")	3682 (12'1")	3638 (11'11")
Teeth	mm (ft/in)	3466 (11'4")	3410 (11'2")	—
Reach at 45° dump				
Bare	mm (ft/in)	1494 (4'11")	1554 (5'1")	1881 (6'2")
Teeth	mm (ft/in)	2028 (6'8")	2084 (6'10")	—
Overall Length				
Bare	mm (ft/in)	11 877 (39'0")	11 962 (39'3")	11 982 (39'4")
Teeth	mm (ft/in)	12 215 (40'1")	12 294 (40'4")	—
Turning Radius at SAE Carry				
Bare	mm (ft/in)	8543 (28'0")	8641 (28'4")	8644 (28'4")
Teeth	mm (ft/in)	8597 (28'2")	8689 (28'6")	—
Reach at 45° dump and 2.13 m (7'0") HGT				
Bare	mm (ft/in)	2389 (7'10")	2427 (8'0")	2840 (9'4")
Teeth	mm (ft/in)	2924 (9'7")	2957 (9'8")	—
Reach with level boom level bucket				
Bare	mm (ft/in)	3435 (11'3")	3520 (11'7")	3972 (13'0")
Teeth	mm (ft/in)	4198 (13'9")	4277 (14'0")	—
Digging Depth – Bucket Level	mm (in)	195 (7.7")	195 (7.7")	185 (7.3")
Full Dump at Maximum Lift	degrees	51.4	51.4	51.4
Tipping Load				
Straight	kg (lb)	34 825 (76,776)	34 355 (75,740)	34 635 (76,357)
Articulated 43°	kg (lb)	29 368 (64,745)	28 923 (63,764)	29 182 (64,335)
Breakout Force	kN (lb-f)	378.4 (85,068)	360.6 (81,066)	383.9 (86,304)
Operating Weight	kg (lb)	49 546 (109,230)	49 816 (109,825)	49 716 (109,605)
Weight Distribution at SAE Carry				
Front	kg (lb)	25 265 (55,700)	25 746 (56,760)	25 540 (56,306)
Rear	kg (lb)	24 281 (53,530)	24 070 (53,065)	24 176 (53,299)

3.88 Meter Linkage			
Straight Rock	Heavy Duty Quarry	High Abrasion	General Purpose
Teeth & Segments	Teeth & Segments	Teeth & Segments	BOCE
6.3 (8.2)	6.4 (8.33)	6.4 (8.33)	7.0 (9.2)
5.2 (6.8)	5.3 (6.9)	5.3 (6.9)	5.88 (7.7)
6.3 (8.2)	6.4 (8.33)	6.4 (8.33)	7.0 (9.2)
3800 (12'6")	3862 (12'8")	3926 (12'11")	3695 (11'2")
7699 (25'3")	7698 (25'3")	7699 (25'3")	7698 (25'3")
4011 (13'2")	3728 (12'3")	3811 (12'6")	3790 (12'5")
3735 (12'3")	3376 (11'1")	3447 (11'4")	—
1526 (5'0")	1543 (5'1")	1577 (5'2")	1720 (5'8")
1765 (5'9")	2076 (6'10")	2047 (6'9")	—
11 497 (37'9")	11 917 (39'1")	11 779 (38'8")	11 765 (38'7")
11 839 (38'10")	12 333 (40'6")	12 242 (40'2")	—
8550 (28'0")	8605 (28'3")	8625 (28'4")	8573 (28'2")
8634 (28'4")	8678 (28'6")	8682 (28'6")	—
2518 (8'3")	2401 (7'11")	2464 (8'1")	2729 (8'11")
2757 (9'1")	2934 (9'8")	2935 (9'8")	—
3480 (11'5")	3535 (11'7")	3552 (11'8")	3751 (12'0")
3822 (12'6")	4295 (14'1")	4225 (13'10")	—
195 (7.7")	225 (8.9")	195 (7.7")	191 (7.5")
51.4	51.4	51.4	51.4
35 257 (77,728)	32 650 (71,981)	33 833 (74,589)	35 026 (77,219)
29 816 (65,733)	27 239 (60,052)	28 383 (62,574)	29 568 (65,186)
467.4 (105,076)	360.7 (81,089)	389.2 (87,496)	433.1 (97,365)
49 261 (108,602)	51 181 (112,835)	51 016 (112,471)	49 401 (108,910)
24 616 (54,269)	28 161 (62,084)	27 367 (60,334)	24 988 (55,089)
24 645 (54,333)	23 020 (50,750)	23 649 (52,137)	24 413 (53,821)

Operation/Bucket Specifications

		4.25 Meter Linkage		
Bucket Type		**Spade Rock (Standard Bucket)**	**Wide Spade Rock**	**Spade Rock**
GET		**Teeth & Segments**	**Teeth & Segments**	**BOCE**
Rated Capacity	m^3 (yd^3)	6.4 (8.33)	6.9 (9.0)	6.9 (9.0)
Struck Capacity	m^3 (yd^3)	5.3 (6.9)	5.7 (7.5)	5.7 (7.5)
Heaped Capacity	m^3 (yd^3)	6.4 (8.33)	6.9 (9.0)	6.9 (9.0)
Bucket Width	mm (ft/in)	3810 (12'6")	3980 (13'1")	3964 (13'0")
Overall Height	mm (ft/in)	8112 (26'7")	8186 (26'10")	8186 (26'10")
Dump Clearance at 45° dump				
Bare	mm (ft/in)	4155 (13'8")	4095 (13'5")	4051 (13'3")
Teeth	mm (ft/in)	3879 (12'9")	3823 (12'7")	—
Reach at 45° dump				
Bare	mm (ft/in)	1591 (5'3")	1652 (5'5")	1699 (5'7")
Teeth	mm (ft/in)	2126 (7'0")	2182 (7'2")	—
Overall Length				
Bare	mm (ft/in)	12 321 (40'5")	12 406 (40'8")	12 426 (40'9")
Teeth	mm (ft/in)	12 658 (41'6")	12 738 (41'9")	—
Turning Radius at SAE Carry				
Bare	mm (ft/in)	8731 (28'8")	8828 (29'0")	8803 (28'11")
Teeth	mm (ft/in)	8787 (28'10")	8879 (29'2")	—
Reach at 45° dump and 2.13 m (7'0") HGT				
Bare	mm (ft/in)	2785 (9'2")	2825 (9'3")	2951 (9'8")
Teeth	mm (ft/in)	3320 (10'11")	3355 (11'0")	—
Reach with level boom level bucket				
Bare	mm (ft/in)	3805 (12'6")	3890 (12'9")	3947 (12'11")
Teeth	mm (ft/in)	4568 (15'0")	4647 (15'3")	—
Digging Depth – Bucket Level	mm (in)	226 (8.9")	226 (8.9")	216 (8.5")
Full Dump at Maximum Lift	degrees	48.5	48.5	48.5
Tipping Load				
Straight	kg (lb)	32 445 (71,529)	32 014 (70,579)	32 264 (71,130)
Articulated 43°	kg (lb)	27 191 (59,946)	26 780 (59,040)	27 012 (59,551)
Breakout Force	kN (lb-f)	409.2 (91,992)	390.1 (87,698)	415.3 (93,363)
Operating Weight	kg (lb)	50 574 (111,497)	50 844 (112,092)	50 744 (111,871)
Weight Distribution at SAE Carry				
Front	kg (lb)	25 583 (56,401)	26 088 (57,514)	25 874 (57,042)
Rear	kg (lb)	24 991 (55,096)	24 756 (54,578)	24 870 (54,829)

4.25 Meter Linkage			
Straight Rock	Heavy Duty Quarry	High Abrasion	General Purpose
Teeth & Segments	Teeth & Segments	Teeth & Segments	BOCE
6.3 (8.2)	6.4 (8.33)	6.4 (8.33)	7.0 (9.2)
5.2 (6.8)	5.3 (6.9)	5.3 (6.9)	5.88 (7.7)
6.3 (8.2)	6.4 (8.33)	6.4 (8.33)	7.0 (9.2)
3800 (12'6")	3862 (12'8")	3926 (12'11")	3695 (11'2")
8112 (26'7")	8112 (26'7")	8112 (26'7")	8111 (26'7")
4424 (14'6")	4141 (13'7")	4225 (13'10")	4203 (13'9")
4148 (13'7")	3790 (12'5")	3860 (12'8")	—
1623 (5'4")	1641 (5'5")	1674 (5'6")	1818 (6'0")
1863 (6'1")	2173 (7'2")	2145 (7'0")	—
11 941 (39'2")	12 358 (40'7")	12 223 (40'1")	12 209 (40'1")
12 283 (40'4")	12 774 (41'11")	12 686 (41'7")	—
8738 (28'8")	8795 (28'10")	8812 (28'11")	8763 (28'9")
8824 (28'11")	8871 (29'1")	8873 (29'1")	—
2904 (9'6")	2801 (9'2")	2861 (9'5")	3114 (10'3")
3144 (10'4")	3334 (10'11")	3332 (10'11")	—
3850 (12'8")	3905 (12'10")	3922 (12'10")	4121 (13'6")
4192 (13'9")	4665 (15'4")	4595 (15'1")	—
226 (8.9")	256 (10.1")	226 (8.9")	222 (8.7")
48.5	48.5	48.5	48.5
32 867 (72,459)	30 346 (66,901)	31 421 (69,271)	32 650 (71,981)
27 628 (60,909)	25 130 (55,402)	26 172 (57,699)	27 394 (60,393)
505.1 (113,551)	390.5 (87,788)	421.6 (94,779)	468.3 (105,278)
50 289 (110,868)	52 209 (115,101)	52 044 (114,737)	50 429 (111,177)
24 907 (54,910)	28 634 (63,127)	27 811 (61,313)	25 293 (55,761)
25 382 (55,958)	23 575 (51,974)	24 233 (53,425)	25 136 (55,415)

Tire Dimensions/Specifications

	Width over tires		Ground clearance		Change in vertical dimensions		Change in operating weight		Change in full turn static tipping load	
	mm	inches	mm	inches	mm	inches	kg	lb	kg	lb
35/65R33 (L-4) Michelin XLDD1	3579	140.9	445	17.5	—	—	—	—	—	—
35/65-33 42 PR (L-5) Bridgestone D-Lug	3541	139.4	544	21.4	–99	–3.9	2259	4980	1310	2888
35/65R33 (L-4) Bridgestone V-Steel N Traction VSNT	3566	140.4	483	19.0	–38	–1.5	664	1464	385	849
35/65R33 (L-5) Bridgestone V-Steel D-Lug VSDL	3566	140.4	498	19.6	–53	–2.1	1257	2772	729	1608
35/65-33 42PR (L-5) General LD 250 Belted	3487	137.3	506	19.9	–61	–2.4	1510	3328	876	1930
875/65R33 (L-4) Goodyear RL-4K Hi Stability	3487	137.3	506	19.9	–61	–2.4	552	1217	320	705
35/65R33 (L-5) Goodyear RL-5K 20 20 6S	3574	140.7	508	20.0	–64	–2.5	974	2148	565	1246
35/65-33 42PR (L-5) Goodyear NRL D/L 5A	3574	140.7	508	20.0	–64	–2.5	1646	3628	954	2104
875/65R33 (L-5) Goodyear RL-5K Hi Stability	3574	140.7	508	20.0	–64	–2.5	1486	3276	862	1900
35/65R33 (L-5) Michelin XLDD2	3579	140.9	463	18.2	–18	–0.7	648	1428	376	828
35/65R33 (L-5) Michelin XMINED2	3579	140.9	478	18.8	–33	–1.3	1404	3096	815	1796

NOTE: In certain applications (such as load-and-carry work), the loader's productive capabilities might exceed the tires tonnes-km/f (ton-mph) capabilities. Caterpillar recommends that you consult a tire supplier to evaluate all conditions before selecting a tire model. Other special tires are available on request.

65 SERIES SIZE

DIMENSIONAL DATA

RADIAL

RL-4K

RL-5K

BIAS

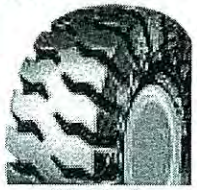

HRL D/L-4B

NRL D/L-5A
HRL DL-4G

NRL D/L-4/15C
NRL D/L-5/15C

DRL 4/15C

NSM D/L-4B
NSM D/L-5B

Size	Type	Ind Code	Current In Line Location	Rim Width & Flange	INFLATED DIMENSIONS Overall Width in	mm	Overall Diameter in	mm	LOADED DIMENSIONS Load Sect & Growth in	mm	Static Load Rad in	mm	Revol Per mi	km	Gross Contact Area in2	cm2	Tire Volume gal	ltrs	Tread Depth 32nds in	mm	PERFORMANCE CAPABILITY 2S tmph	tkph	4S tmph	tkph	6S tmph	tkph
30/65-29	*NRL D/L-5A*	*L-5*	*N E*	24.00-3.0	**30.4**	722	**71.3**	1811	**33.1**	841	**32.6**	828	**289**	180	**436**	2813	**170.7**	646.0	**111**	88			**^50**	^70	**^45**	^70
875/65R33	**RL-4K**	**L-4**	**N**	28.00-3.5	**35.6**	904	**81.9**	2079	**38.7**	982	**36.9**	937	**257**	159	**686**	4426	**425.0**	1609.0	**73**	58			**125#**	180#	**111#**	162#
(35/65R33)	**RL-5K**	**L-5**	**N E A**		**35.6**	904	**81.9**	2079	**38.7**	982	**36.9**	937	**257**	159	**686**	4426	**411.0**	1555.6	**120**	95			**^90**	^130	**^80**	^120
35/65-33	**NRL D/L-4A**	**L-4**	**N A**	28.00-3.5	**35.7**	907	**80.5**	2045	**38.0**	965	**36.7**	932	**254**	158	**618**	3987	**382.9**	1449.4	**74**	59			**^70**	^100	**^65**	^100
	NRL D/L-5A (&FB)	**L-5**	**N L A**		**35.5**	901	**80.2**	2037	**38.7**	983	**36.9**	937	**253**	157	**652**	4207	**311.4**	1178.7	**122**	96			**^65**	^100	**^60**	^90
	NDL D/L-5/15C	**L-5**	**N**		**35.7**	907	**80.5**	2045	**38.7**	983	**36.7**	932	**253**	157	**652**	4207	**311.4**	1178.7	**122**	96						
	NSM D/L-5B	**L-5S**	**N**		**35.7**	907	**80.5**	2045	**38.7**	983	**36.7**	932	**253**	157	**652**	4207	**311.4**	1178.7	**122**	96						
40/65-39	**NRL D/L-5A**	**L-5**	**N A**	32.00-4.0	**42.4**	1077	**94.4**	2398	**45.9**	1166	**43.3**	1100	**216**	134	**927**	5981	**457.3**	1731.0	**137**	109			**^90**	^130	**^80**	^120
41.25/70-39	**NRL D/L-5A**	**L-5**	**N A**	32.00-4.5	**42.1**	1069	**98.4**	2499	**43.8**	1113	**44.6**	1133	**209**	130	**955**	6162	**549.3**	2079.2	**145**	115			**^95**	^140	**^85**	^120
45/65R39	*RL-4K #*	*L-4*	*N*	36.00-4.5	**45.0**	1143	**101.6**	2578	**49.8**	1264	**44.9**	1140	**207**	129	**1046**	6745	**825.0**	3123.0	**89**	71						
	RL-5K	**L-5**	**N**		**45.5**	1156	**101.5**	2577	**51.9**	1318	**44.8**	1139	**213**	132	**1256**	8106	**750.0**	2839.0	**146**	116			**130#**			
45/65R45*	**RL-4K**	**L-4**	**N**	36.00-4.5	**45.0**	1143	**107.8**	2737	**49.4**	1255	**48.0**	1218	**195**	119	**1195**	7704	**900.0**	3407.0	**89**	71			**^170#**			
(1150/65R45)	**RL-5K**	**L-5**	**N**		**45.0**	1143	**107.8**	2737	**49.4**	1255	**48.0**	1218	**195**	119	**1195**	7704	**825.0**	3123.0	**149**	118			**^155#**			
45/65-45	**NRL D/L-5A**	**L-5**	**N A**	36.00-4.5	**45.0**	1143	**107.6**	2733	**48.5**	1232	**49.4**	1255	**190**	118	**1050**	6775	**738.2**	2794.3	**145**	115			**^115**	^170	**^105**	^150
	NRL D/L-5A,C (&FB)	**L-5**	**N**		**45.0**	1143	**107.6**	2733	**48.5**	1232	**49.4**	1255	**190**	118	**1050**	6775	**738.2**	2794.3	**145**	115						
	NDL D/L-5/15C,S	**L-5**	**N A**		**45.0**	1143	**107.6**	2733	**48.5**	1232	**49.4**	1255	**190**	118	**1050**	6775	**738.2**	2794.3	**148**	117						
	NSM D/L-5B,5S	**L-5S**	**N** *A*		**45.0**	1143	**107.6**	2733	**48.5**	1232	**49.4**	1255	**190**	118	**1050**	6775	**738.7**	2796.2	**148**	117						
49/75-51	*HRL D/L-4B*	*L-4*	*N*	36.00-5.0	**50.0**	1270	**127.8**	3246	**53.9**	1369	**58.8**	1494	**159**	99	**1867**	12046			**114**	90						
50/65-51	**NRL D/L-5A**	**L-5**	**N A**	40.00-4.5	**51.4**	1306	**120.5**	3061	**56.0**	1422	**54.6**	1387	**171**	106	**1630**	10514	**846.0**	3202.1	**160**	127			**^ 135**	^200	**^120**	^180
67-51	*NRL D/L-5A*	*L-5*	*N*	45.00-5.5	**65.6**	1666	**137.7**	3498	**72.0**	1829	**60.2**	1529	**155**	96	**2450**	15807	**1538.0**	5820.0	**172**	137						

 # Estimated Data
Italicized sizes (light type) not currently in line this location.
Sizes in bold type can be obtained in locations in bold.
Extended lead time may be needed in other locations.

In Line: **N** = North America
L = Latin America
E = Europe / Africa / Mid East
A = Asia / Australia

^ Indicates WCF Work Capability Factor

46

LOAD LIMITS AT COLD INFLATION PRESSURES

5 MPH (10 KM/H) MAXIMUM SPEED OFF-THE-ROAD SLOW SPEED SERVICE

RADIAL	PSI	58	62	65	69	73	76	80	83	87	91	94
	KPA	400	425	450	475	500	525	550	575	600	625	650
35/65R33	LBS	43000	45400	46700	49400	50700*	52000	55100	56800	58400	60000	61500**
(875/65R33)	KG	19500	20600	21200	22400	23000*	23600	25000	25750	26500	27250	28200**
45/65R39	LBS	74000	76000	80500	82500	88000*	91000	93500	96500	99000	102000	104500**
	KG	33500	34500	36500	37500	40000*	41250	42500	43750	45000	46250	47500**
45/65R45	LBS	78500	82500	85500	88000	93500*	96500	99000	102000	104500	110000	113500**
(1150/65R45)	KG	35500	37500	38750	40000	42500*	43750	45000	46500	47500	50000	51500**

BIAS	PSI	47	51	54	58	62	65	69	73	76	80	83	87	91	94	98
	KPA	325	350	375	400	425	450	475	500	525	550	575	600	625	650	675
30/65-29	LBS	28300	29100(20)	30900	32000(24)											
	KG	12850	13200(20)	14000	14500(24)											
35/65-33	LBS	39700	41900(24)	43000	44100	46700	48100(30)	49400	50700	52000(36)				58400(42)		
	KG	18000	19000(24)	19500	20000	21200	21800(30)	22400	23000	23600(36)				26500(42)		
38-39	LBS	53600	56800	58400	60000(30)	64000	66000	68000	69500	71500	74000	76000	78500			
	KG	24300	25750	26500	27250(30)	29000	30000	30750	31500	32500	33500	34500	35500			
40/65-39	LBS	52000	55100	56800	60000(30)	61500	64000	66000	68000(36)							
	KG	23600	25000	25750	27250(30)	28000	29000	30000	30750(36)							
41.25/70-39	LBS	66000(34)	69500	71500	74000	78500	80500	82500(42)	85500	88000	91000					
	KG	30000(34)	31500	32500	33500	35500	36500	37500(42)	38750	40000	41250					
45/65-45	LBS	71500	76000	78500	82500	85500(38)	88000	91000	93500	96500(46)						110000(58)
	KG	32500	34500	35500	37500	38750(38)	40000	41250	42500	43750(46)						50000(58)
50/65-51	LBS	93500	96500	102000	104500	107500	113500	117000(46)	120000	123500	128000	128000(54)	132500		139000(62)	
	KG	42500	43750	46250	47500	48750	51500	53000(46)	54500	56000	58000	58000(54)	60000		63000(62)	
67-51	LBS	156500	165500	171000	176500	187500	193000(54)	198500	204000	209500	215000	220500	227000			
	KG	71000	75000	77500	80000	85000	87500(54)	90000	92500	95000	97500	100000	103000			

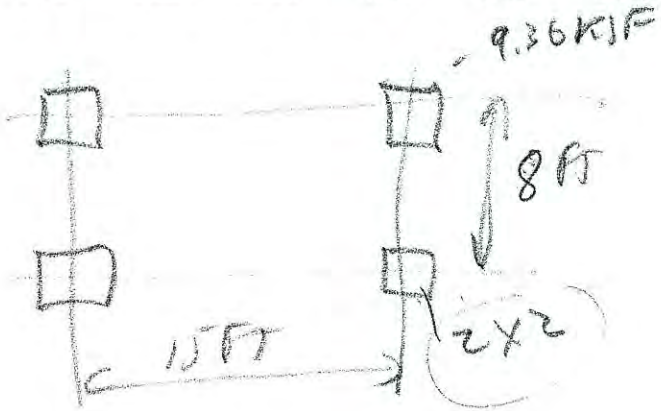

47

65 SERIES SIZE
Tubeless Tires

48

770

Off-Highway Truck

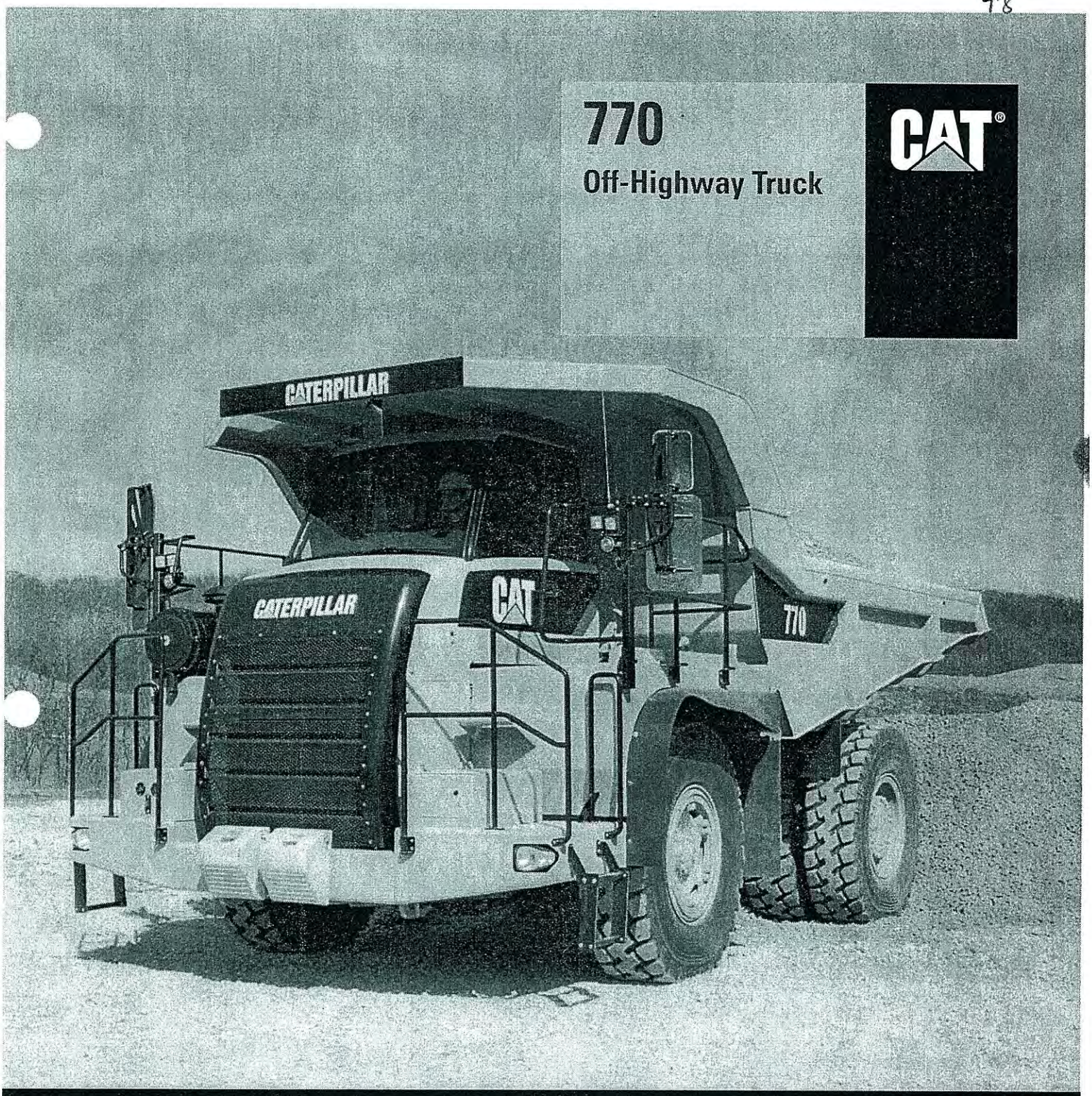

Engine		
Engine Model	Cat® C15 ACERT™	
Gross Power – SAE J1995	381 kW	511 hp
Net Power – SAE J1349	355 kW	476 hp
Weights – Approximate		
Target Gross Machine Operating Weight	71 214 kg	157,000 lb

Operating Specifications		
Nominal Payload Class	36.3 tonnes	40 tons
Body Capacity – SAE 2:1	25.1 m^3	32.9 yd^3

- Refer to the Caterpillar® 10/10/20 Overload Policy for maximum gross machine weight limitations.
- Capacity with flat floor body.

49

CATERPILLAR®

Compact Equipment
Machines
» Articulated Trucks
» Backhoe Loaders
» Cold Planers
» Compactors
» Feller Bunchers
» Forest Machines
» Forwarders
» Harvesters
» Hydraulic Excavators
» Industrial Loaders
» Knuckleboom Loaders
» Lift Trucks
» Material Handlers
» Motor Graders
» Multi Terrain Loaders
» Off-Highway Tractors
» Off-Highway Trucks
» Paving Equipment
» Pipelayers
» Road Reclaimers
» Scrapers
» Skidders
» Skid Steer Loaders
» Telehandlers
» Track Loaders
» Track-Type Tractors
» Underground Mining
» Wheel Dozers
» Wheel Excavators
» Wheel Loaders
Work Tools
Engines
Power Generation
Rental Power
Turbines
Parts
Used Equipment
Electronics
OEM Solutions
Technology
Gifts & Apparel

770 OFF-HIGHWAY TRUCK

SPECIFICATIONS

Units: **US** | **Metric**

Engine	
Engine Model	Cat® C15 ACERT™
Rated Engine Speed	1800 RPM
Gross Power - SAE J1995	511 hp
Net Power - SAE J1349	476 hp
Net Power - 80/1269/EEC	476 hp
Number of Cylinders	6
Bore	5.4 in
Stroke	6.7 in
Displacement	927.6 in3
Net Power - ISO 9249:1997	476 hp
Operating Specifications	
Nominal Payload Class	40 tons
Top Speed - Loaded	46.5 mph
Body Capacity - SAE 2:1	32.8 yd3
Weights - Approximate	
Target Gross Machine Operating Weight	157000 lb
Chassis Weight	53380 lb
Body Weight	22110 lb
Capacity - Dual Slope - 100% fill factor	
Struck	21.5 yd3
Heaped 2:1 (SAE)	32.8 yd3
Capacity - Flat Floor - 100% fill factor	
Struck	21.5 yd3
Heaped 2:1 (SAE)	32.8 yd3
Weight Distributions - Approximate	
Front Axle - Empty	48 %
Front Axle - Loaded	34 %
Rear Axle - Empty	52 %
Rear Axle - Loaded	66 %
Transmission	
Forward 1	7.5 mph
Forward 2	10.3 mph
Forward 3	14 mph
Forward 4	18.8 mph
Forward 5	25.4 mph
Forward 6	34.3 mph
Forward 7	46.5 mph
Reverse	9.9 mph
Final Drives	
Differential Ratio	2.74:1
Planetary Ratio	4.80:1
Total Reduction Ratio	13.15:1
Brakes	

50

Brake Surface - Front	216 in2
Brake Surface - Rear	6235 in2
Brake Standards	ISO 3450: 1996

Service Refill Capacities

Fuel Tank	140 gal
Cooling System	30 gal
Differentials and Final Drives	22 gal
Steering Tank	9 gal
Steering System (Includes Tank)	15 gal

Body Hoists

Pump Flow - High Idle	136 gal/min
Relief Valve Setting - Raise	2500 psi
Relief Valve Setting - Lower	500 psi
Body Raise Time - High Idle	9.5 Seconds
Body Lower Time - Float	12.5 Seconds
Body Power Down - High Idle	12.5 Seconds

Suspension

Effective Cylinder Stroke - Front	9.2 in
Effective Cylinder Stroke - Rear	5.9 in
Rear Axle Oscillation	5.4 Degrees

Dimensions

Height to Top of ROPS	12.83 ft
Overall Body Length	26.81 ft
Inside Body Length	18.21 ft
Overall Length	28.67 ft
Wheelbase	13 ft
Rear Axle to Tail	8.5 ft
Ground Clearance	2.23 ft
Dump Clearance	1.52 ft
Loading Height - Empty	10.24 ft
Inside Body Depth - Max	4.35 ft
Overall Height - Body Raised	27.17 ft
Operating Width	15.59 ft
Centerline Front Tire Width	10.2 ft
Engine Guard Clearance	2.21 ft
Overall Canopy Width	13 ft
Inside Body Width	12.13 ft
Front Canopy Height	13.58 ft
Rear Axle Clearance	1.67 ft
Centerline Rear Dual Tire Width	8.32 ft
Overall Tire Width	12.12 ft

Tires

Standard Tire	18.00R33 (E4)

ROPS

ROPS / FOPS Standards	

Sound

Sound Standards	

Steering

Steering Standards	ISO 5010:1992
Steer Angle	40 Degrees

Newsfeeds © 2008 Caterpillar All Rights Reserved Legal Notices Site Map Print Version Contact

Truck Body Systems

Cat designed and built for rugged performance and reliability in the toughest hauling applications. 51

Increased Body Capacities. The 770 body capacity at 25.1 m^3 (32.9 yd^3), has increased 3.5 percent over the 769 at 24.2 m^3 (31.7 yd^3). Payloads are based on 1660 kg per LCM (2,800 lb per LCY) material.

Electronic Hoist Control. Provides the operator with better control of the load when dumping, including over-center load control and modulated control throughout the operating range. The automatic body snubbing feature reduces impact on the frame, hoist cylinders and operator.

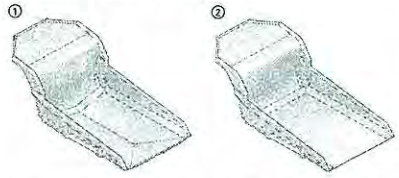

1) Dual Slope Body *2) Flat Floor Body*

Body Design. The new dual slope and flat floor body systems will continue to use fully fabricated, mild steel structures, offering a strong, yet weldable underbody structure. All interior, steel body surfaces that come in contact with material are fabricated from 400 BHN steel to provide superior wear characteristics and resistance to impact. Wide box-section ribs provide excellent durability and impact support in the floor, front-wall, sidewall, and top rail areas. Full-length stringer rails enhance strength and rigidity throughout the body. Other new features that further enhance durability of the understructure include:

- Sidewall ribs are integrated into the floor ribs, forming a belt to provide increased strength in the sidewalls.
- Underbody ribs are increased from seven to nine, enhancing the underbody structural support.
- Front wall body rest supports are integrated into the front wall structure for enhanced durability.
- Full-length, single-piece stringer rails are used, improving the structural support in the body, especially in the body pivot support area.
- Front wall is 400 BHN and the thickness is increased from 10.2 mm (0.4 in) to 16.0 mm (0.63 in), eliminating the need for additional liners for impact resistance in most applications.

Application Specific Body Systems. With the introduction of the next generation of trucks, Caterpillar will build on the previous strengths and provide differentiation through six different body systems. Both dual slope and flat floor bodies will be available in the following configurations:

- Low Impact, Steel Body System
- Medium Impact, Steel Body System
- High Impact, Steel Body System
- Heavy Duty Impact, Steel Body System
- High Impact, Rubber Body System
- Heavy Duty High Impact, Rubber Body System

Steel-Lined Body System. The traditional steel-lined system is well understood by users worldwide. In the new 770 steel body system, the unique design allows the floor and liner to work together to provide the impact and wear resistance. The Medium Impact, Steel Body System offers optimum combinations of wear and impact resistance, while maximizing performance. If the application dictates higher impact or wear needs, the High Impact, Steel Body System or the Heavy Duty, High Impact, Steel Body System provides more impact and wear resistance, but at an increase in body weight versus the Medium Impact, Steel Body System.

Dimensions

All dimensions are approximate.

52

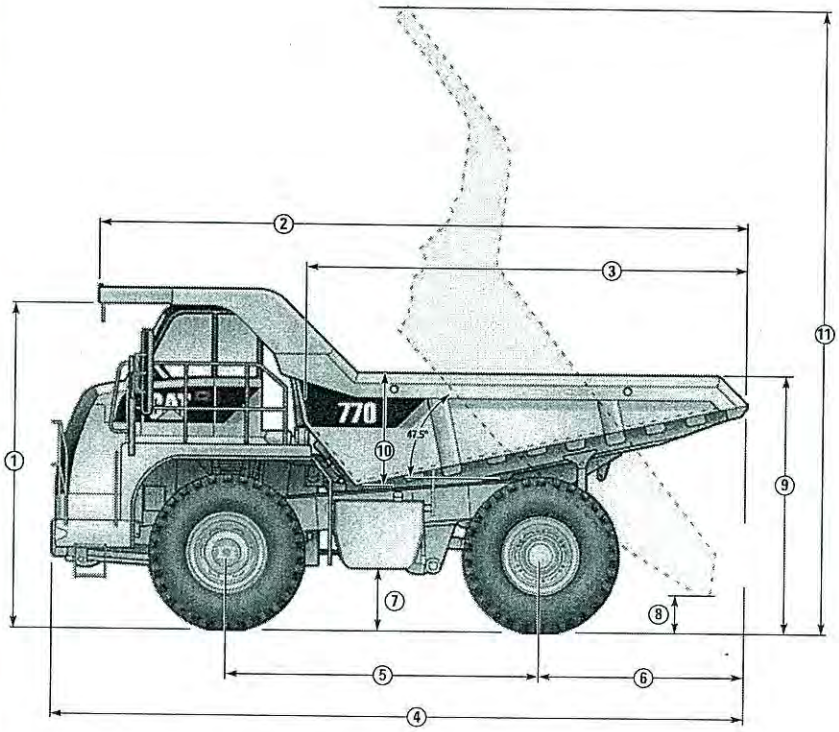

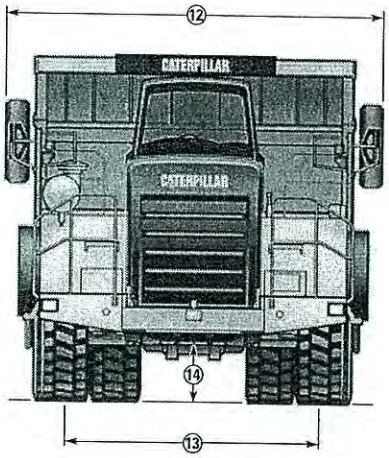

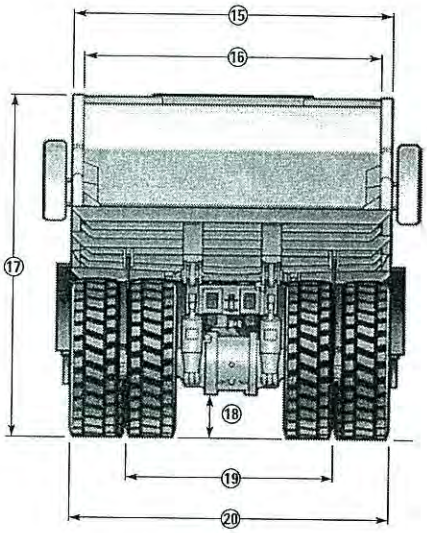

1	Height to Top of ROPS	3911 mm	12 ft 10 in
2	Overall Body Length	8185 mm	26 ft 10 in
3	Inside Body Length	5549 mm	18 ft 3 in
4	Overall Length	9020 mm	29 ft 7 in
5	Wheelbase	3960 mm	13 ft
6	Rear Axle to Tail	2595 mm	8 ft 6 in
7	Ground Clearance	680 mm	2 ft 3 in
8	Dump Clearance	498 mm	1 ft 7 in
9	Loading Height – Empty	3158 mm	10 ft 4 in
10	Inside Body Depth – Max.	1326 mm	4 ft 5 in

11	Overall Height – Body Raised	8280 mm	27 ft 2 in
12	Operating Width	4780 mm	15 ft 8 in
13	Centerline Front Tire Width	3110 mm	10 ft 3 in
14	Engine Guard Clearance	673 mm	2 ft 3 in
15	Outside Body Width	3932 mm	12 ft 10 in
16	Inside Body Width	3698 mm	12 ft 2 in
17	Front Canopy Height	4195 mm	13 ft 9 in
18	Rear Axle Clearance	508 mm	1 ft 9 in
19	Centerline Rear Dual Tire Width	2536 mm	8 ft 4 in
20	Overall Tire Width	3693 mm	12 ft 2 in

Weight/Payload Calculation

(Example)

Flat Floor

	Low Impact Steel Body System 8 mm (0.315 in)	Medium Impact Steel Body System 16 mm (0.630 in)	High Impact Steel Body System 20 mm (0.787 in)	Heavy Duty Steel Body System 25 mm (1.0 in)	High Impact Rubber Body System 102 mm (4.0 in)	Heavy Duty Rubber Body System 102 mm (4.0 in)
Target Gross Machine Weight* kg (lb)	71 214 (157,000)	71 214 (157,000)	71 214 (157,000)	71 214 (157,000)	71 214 (157,000)	71 214 (157,000)
Empty Chassis Weight* kg (lb)	24 213 (53,380)	24 213 (53,380)	24 213 (53,380)	24 213 (53,380)	24 213 (53,380)	24 213 (53,380)
Body System Weight kg (lb)	8367 (18,446)	10 029 (22,110)	10 524 (23,202)	11 474 (25,296)	10 757 (23,714)	11 113 (24,499)
Empty Machine Weight kg (lb)	32 579 (71,826)	34 242 (75,490)	34 737 (76,582)	35 687 (78,676)	34 969 (77,094)	35 325 (77,879)
Attachments						
Fuel Tank Size L (gal)	529 (140)	529 (140)	529 (140)	529 (140)	529 (140)	529 (140)
Fuel Tank – 100% fill kg (lb)	446 (983)	446 (983)	446 (983)	446 (983)	446 (983)	446 (983)
Empty Operating Weight** kg (lb)	33 026 (72,809)	34 688 (76,473)	35 183 (77,565)	36 133 (79,659)	35 415 (78,077)	35 771 (78,862)
Target Payload* kg (lb)	38 190 (84,191)	36 526 (80,527)	36 031 (79,435)	35 081 (77,341)	35 799 (78,923)	35 443 (78,138)
Target Payload* tonnes (tons)	38.2 (42.1)	36.6 (40.3)	36.0 (39.7)	35.1 (38.7)	35.8 (39.5)	35.4 (39.1)

Dual Slope

	Low Impact Steel Body System 8 mm (0.315 in)	Medium Impact Steel Body System 16 mm (0.630 in)	High Impact Steel Body System 20 mm (0.787 in)	Heavy Duty Steel Body System 25 mm (1.0 in)	High Impact Rubber Body System 102 mm (4.0 in)	Heavy Duty Rubber Body System 102 mm (4.0 in)
Target Gross Machine Weight* kg (lb)	71 214 (157,000)	71 214 (157,000)	71 214 (157,000)	71 214 (157,000)	71 214 (157,000)	71 214 (157,000)
Empty Chassis Weight* kg (lb)	24 213 (53,380)	24 213 (53,380)	24 213 (53,380)	24 213 (53,380)	24 213 (53,380)	24 213 (53,380)
Body System Weight kg (lb)	8362 (18,436)	10 019 (22,088)	10 518 (23,188)	11 474 (25,295)	10 836 (23,889)	11 159 (24,602)
Empty Machine Weight kg (lb)	32 930 (71,816)	34 232 (75,468)	34 731 (76,568)	35 686 (78,675)	35 049 (77,269)	35 372 (77,982)
Attachments						
Fuel Tank Size L (gal)	529 (140)	529 (140)	529 (140)	529 (140)	529 (140)	529 (140)
Fuel Tank – 100% fill kg (lb)	445 (983)	445 (983)	445 (983)	445 (983)	445 (983)	445 (983)
Empty Operating Weight** kg (lb)	33 021 (72,799)	34 688 (76,451)	35 177 (77,551)	36 132 (79,658)	35 495 (78,252)	35 817 (78,965)
Target Payload* kg (lb)	38 193 (84,201)	36 536 (80,549)	36 038 (79,449)	35 082 (77,342)	35 720 (78,748)	35 396 (78,035)
Target Payload* tonnes (tons)	38.2 (42.1)	36.6 (40.3)	36.0 (39.7)	35.1 (38.7)	35.7 (39.4)	35.4 (39.0)

* Refer to Caterpillar® 10/10/20 overload policy
** Includes weight of all attachments

CONVENTIONAL SIZE

DIMENSIONAL DATA

RADIAL

RL-2F

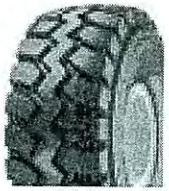
GP-4C

RL-3+
EV-3+

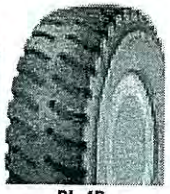
RL-4B

RL-4F

RL-4
RL-4H
RL-4H II

RL-4J
RL-4J II
EV-4J

RT-4A

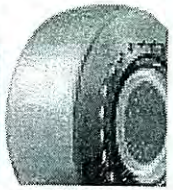
EV-S4S
EV-S5S
EV-4S

BIAS

HRL-3A
ELV-3A

HRL-4B
MRL-4B
ELV-4B

Size	Type	Ind Code	Current In Line Location	Rim Width & Flange	Min. Dual Spacing in mm	INFLATED DIMENSIONS Overall Width in mm	INFLATED DIMENSIONS Overall Diameter in mm	LOADED DIMENSIONS Load Sect & Growth in mm	LOADED DIMENSIONS Static Load Rad in mm	Revol Per mi km	Gross Contact Area in2 cm2	Tire Volume gal ltrs	Tread Depth 32nds in mm	PERFORMANCE CAPABILITY 2S tmph tkph	PERFORMANCE CAPABILITY 4S tmph tkph	PERFORMANCE CAPABILITY 6S tmph tkph
18.00R33	RL-3+	E-3	N E	13.00-2.5	23.1 587	19.5 495	71.8 1824	21.9 556	33.1 841	293 182	295 1903	160.6 607.9	53 42	180 260	135 200	110 160
	GP-4C #	E-4	A		23.1 587	20.2 513	73.2 1858	22.2 564	32.7 831	287 178	308 1984	175.0 662.0	70 56			
	RT-4A	E-4	E		23.1 587	20.2 513	73.5 1867	22.9 582	32.8 833	286 178	337 2175	175.0 662.0	68 54	170 245	125 180	94 140
	RL-4B	E-4	N A		23.1 587	20.0 507	73.2 1858	22.2 564	32.7 831	287 178	310 1997	175.0 662.0	68 54	155 230	120 175	90 130
	RL-4F	*E-4*	*N E*		23.1 587	20.2 513	73.6 1868	22.6 574	34.0 864	285 177	302 1949	160.7 608.2	59 47	140 200	105 150	85 120
	RL-4H	E-4	*N* A		23.1 587	19.7 501	73.7 1871	22.2 563	34.1 866	285 177	290 1870	154.7 585.7	68 54	155 230	120 175	90 130
	RL-4J	E-4	N E		23.1 587	19.7 501	73.7 1871	22.2 563	34.1 866	285 177	290 1870	154.7 585.7	68 54	155 230	120 175	90 130
	EV-4J #	IND-4	E		23.1 587	20.2 513	73.8 1875	22.6 574	34.1 866	285 177	440 2841	154.8 586.0	67 53			
	EV-3+	IND-3+	*N* E		23.1 587	19.5 495	72.5 1824	21.9 556	33.1 841	293 182	295 1903	160.6 607.9	53 42			
	EV-S4S	IND-4S	E		23.1 587	20.6 524	73.5 1868	21.7 551	31.8 808	288 179	430 2773		68 54			
	EV-S5S	IND-5S	E		23.1 587	20.2 513	73.7 1873		32.7 831	285 177	396 2555		117 93			
	RL-2F	*E-2*	*N E A*		23.1 587	19.5 495	71.7 1821	21.7 551	32.8 833	293 182	290 1871	159.5 603.7	37 29	200 290	150 220	
	RL-4	*E-4*	*N E*		23.1 587	20.2 513	73.0 1854	21.7 551	33.6 853	288 179	296 1910	164.3 621.8	68 54	150 220	115 170	90 130
	EV-4S		*N*		23.1 587	19.5 495	71.8 1824	21.9 556	33.1 841	293 182	295 1903	160.6 607.9	68 54			
18.00-33	HRL-4B	E-4	N L A	13.00-2.5	23.1 587	20.3 516	73.4 1864	22.2 564	34.4 874	273 170	270 1742	146.1 553.0	70 56		100 150	85 120
	ELV-4B	IND-4	*N* L A		23.1 587	20.3 516	73.4 1864			273 170		146.1 553.0	70 56			
	HRL-3A	E-3	L A		23.1 587	20.4 518	71.9 1826	22.5 572	33.4 848	282 175	287 1852	148.6 562.5	39 31	150 220	110 160	
	ELV-3A	*E-3*	*N*		23.1 587	20.4 518	71.9 1826	22.5 572	33.4 848	282 175	287 1852	148.6 562.5	39 31			
21.00R33	RL-4B	E-4	*N* E A	15.00-3.0	26.3 667	23.6 599	78.4 1991	26.8 681	36.0 914		350 2258		68 54	205 300	160 230	127 190
21.00R35	*RL-2F*	*E-2*	*N*	15.00-3.0	27.6 701	22.9 582	78.4 1991	25.2 640	35.9 912	268 167	380 2452	224.4 849.5	40 32	275 400	210 300	
	RL-3+	*E-3*	*N E*		27.6 701	23.1 587	79.3 2014	25.7 653	36.3 922	265 165	362 2336	231.7 877.1	56 44	245 360	185 270	145 200
	RL-4B #		*N*		27.6 701	23.6 599	80.2 2036	26.4 670	35.8 908	262 163	399 2579	250.0 496.0	70 56			
	RL-4F	*E-4*	*N E*		27.6 701	23.3 592	80.9 2055	26.1 664	36.9 937	260 162	380 2450	231.7 877.1	68 54	200 290	150 220	120 180
	RL-4J/4J II	E-4	N E A		27.6 701	23.2 590	80.4 2042	26.7 678	37.0 940	261 162	367 2368	239.5 906.6	68 54	215 310	165 240	130 190
	RL-4H/4H II	E-4	*N* A		27.6 701	23.2 590	80.4 2042	26.7 678	37.0 940	261 162	367 2368	242.8 919.1	68 54	215 310	165 240	130 190
21.00-35	HRL-4B	E-4	N L A	15.00-3.0	27.6 701	24.0 610	80.2 2037	26.2 665	37.2 945	253 157	366 2361	213.1 806.6	70 56	180 260	130 190	110 160
	ELV-4B	IND-4	N		27.6 701	24.0 610	80.2 2037	26.2 665	37.2 945	253 157	366 2361	213.1 806.6	70 56			
	ELV-4S	*IND-4S*	*N*		27.6 701	23.8 605	80.1 2035	26.2 665	37.2 945	253 157	366 2361		76 60			
	MRL-4B	E-4	N		27.6 701	23.8 605	80.1 2035	26.2 665	37.2 945	253 157	366 2361		76 60		115 170	
	HRL-3A	*E-3*	*N*		27.6 701	23.6 599	78.6 1996	26.0 660	36.5 927	258 160	363 2342	198.0 749.0	44 35	200 290	145 210	

 # Estimated Data
Italicized sizes (light type) not currently in line this location.
Sizes in bold type can be obtained in locations in bold.
Extended lead time may be needed in other locations.

In Line: **N** = North America **E** = Europe / Africa / Mid East
L = Latin America **A** = Asia / Australia

54

LOAD LIMITS AT COLD INFLATION PRESSURES

30 MPH (50 KM/H) MAXIMUM SPEED OFF-THE-ROAD HAULAGE SERVICE

BIAS	PSI	40	44	47	51	54	58	62	65	69	73	76	80	83	87	91
	KPA	275	300	325	350	375	400	425	450	475	500	525	550	575	600	625
18.00-33	LBS	14300	15200	16100	16500	17600	18200	18700(24)	19300	19800	20400(28)	21500	22000	22700(32)	22700	23400(36)
	KG	6500	6900	7300	7500	8000	8250	8500(24)	8750	9000	9250(28)	9750	10000	10300(32)	10300	10600(36)
30.00-33	LBS		37500	39700	41900	43000	44100	46700(40)	48100	49400	50700					
	KG		17000	18000	19000	19500	20000	21200(40)	21800	22400	23000					
21.00-35	LBS	19300	19800	20900	22000	22700	24000	24700(28)	25400	26000	26800(32)	27600	28300(36)			
	KG	8750	9000	9500	10000	10300	10900	11200(28)	11500	11800	12150(32)	12500	12850(36)			

RADIAL	PSI	65	69	73	76	80	83	87	91	94	98	102
	KPA	450	475	500	525	550	575	600	625	650	675	700
18.00R33	LBS	17100	17600*	18700	19300	19800	20400	21500	22000	22700	23400	24000**
	KG	7750	8000*	8500	8750	9000	9250	9750	10000	10300	10600	10900**
21.00R33	LBS	22000	22700*	24000	24700	25400	26000	27600	28300	29100	30000	30900**
	KG	10000	10300*	10900	11200	11500	11800	12500	12850	13200	13600	14000**
21.00R35	LBS	22700	23400*	24700	25400	26000	26800	28300	29100	30000	30900	32000**
	KG	10300	10600*	11200	11500	11800	12150	12850	13200	13600	14000	14500**

5 MPH (10 KM/H) MAXIMUM SPEED OFF-THE-ROAD SLOW SPEED SERVICE

BIAS	PSI	69	73	76	80	83	87	91	94	98	102	105	109	120
	KPA	475	500	525	550	575	600	625	650	675	700	725	750	825
18.00-33	LBS	29100	30000	30900	32000(24)	33100	33100	34200	35300(28)	36400	36400	37500	38600(32)	40800(36)
	KG	13200	13600	14000	14500(24)	15000	15000	15500	16000(28)	16500	16500	17000	17500(32)	18600(36)
21.00-35	LBS	38600	39700	40800	41900	43000(28)	44100	45400	46700(32)	46700	48100	49400	50700(36)	53600(42)
	KG	17500	18000	18500	19000	19500(28)	20000	20600	21200(32)	21200	21800	22400	23000(36)	24000(42)

RADIAL	PSI	76	80	83	87	91	94	98	102	105	109	112	116	120	131
	KPA	525	550	575	600	625	650	675	700	725	750	775	800	825	900
18.00R33	LBS	29100	30000*	30900	32000	33100	34200	35300	36400	36400	37500	38600	39700	40800**	43000***
	KG	13200	13600*	14000	14500	15000	15500	16000	16500	16500	17000	17500	18000	18500**	19500***
21.00R33	LBS	37500	38600*	39700	40800	41900	43000	44100	45400	46700	48100	49400	50700	52000**	
	KG	17000	17500*	18000	18500	19000	19500	20000	20600	21200	21800	22400	23000	23600**	
21.00R35	LBS	38600	39700*	40800	41900	43000	44100	45400	46700	48100	49400	50700	52000	53600**	
	KG	17500	18000*	18500	19000	19500	20000	20600	21200	21800	22400	23000	23600	24300**	

72 K.

36 K L

55

CONVENTIONAL SIZE
Tubeless Tires

Concrete Moment Design
For Area of Steel

Pinon Ridge
Golder
Uranium Ore Pad Moment Design

SM&RC Structural Engineers Inc.

fc =	4500	psi
ϕ =	0.9	
Mu =	8.64	ft-kips
m =	15.68627	
fy =	60,000	psi
b =	12	inchs
d =	11	inchs

DETERMINE REQ'D Bending REINFORCEMENT

Calculate Ru

Ru = 79.33884 Mu/(ϕ*b*d^2)

Calculate Required Area of Steel 1/m*(1-(1-(2*m*Ru/fy))^0.5)

Sigma =	0.001336	
Sigma*b*d*1.33=As	0.234604	in^2
Sigma*b*d*1.0=As	0.176394	in^2
.00333*b*d = As	0.4356	in^2

Concrete Moment Design
For Area of Steel

Pinon Ridge
Golder
Uranium Ore Pad Moment Design

SM&RC Structural Engineers Inc.

fc =	4500	psi
ϕ =	0.9	
Mu =	4.8	ft-kips
m =	15.68627	
fy =	60,000	psi
b =	12	inchs
d =	4.25	inchs

DETERMINE REQ'D Bending REINFORCEMENT

Calculate Ru

Ru = 295.271 Mu/(ϕ*b*d^2)

Calculate Required Area of Steel 1/m*(1-(1-(2*m*Ru/fy))^0.5)

Sigma =	0.005127	
Sigma*b*d*1.33=As	0.34779	in^2
Sigma*b*d*1.0=As	0.261496	in^2
.00333*b*d = As	0.1683	in^2