APPENDIX D

TAILINGS UNDERDRAIN SYSTEM DESIGN

APPENDIX D

TAILINGS UNDERDRAIN SYSTEM DESIGN

This appendix presents analyses related to design of the tailings underdrain system. Appendix D-1 presents filter compatibility analysis for design of the coarse-grained underdrain fill materials which will be in contact with tailings materials, and Appendix D-2 presents riser pipe and collection pipe stability (i.e., crushing/deformation) calculations.

FILTER COMPATIBILITY ANALYSES

Filter compatibility analyses were conducted for use in design of the soil filter between the tailings material and the perforated underdrain collection pipes. Due to the fine-grained nature of the tailings materials, a two layer filter system is required.

The analyses provide an acceptable gradation range (filter band) for the filter materials, using the method outlined in NRCS (1994). Since no onsite soils meet the filter band criteria, use of ASTM C-33 Fine Aggregate is recommended for the Fine Underdrain Fill layer (between the tailings materials and coarse aggregate filter) and ASTM C-33 Size 8 Coarse Aggregate is recommended for the Coarse Underdrain Fill (between the fine aggregate and the perforated underdrain collection pipes). These materials were chosen based on their standard availability, but other soil gradations falling within the design filter bands would also be acceptable.

PIPE CRUSHING ANALYSES

Two underdrain riser pipes are provided within each underdrain sump to add redundancy to the system. The risers consist of 10-inch diameter, SDR-11 high density polyethylene (HDPE) pipes. The lower ends of the pipes are slotted in the sump area to provide solution access into the risers. Recovered solutions will be returned to the mill circuit. The HDPE underdrain riser pipes are designed according to the modified Burns & Richard (1964) method (Lupo, 2001) to resist crushing and wall buckling due to the anticipated loading associated with the maximum height of overlying tailings. The maximum vertical and horizontal strains calculated for the riser pipes are 1.9 percent and -2.2 percent, respectively.

Similar calculations were performed for the underdrain collection pipes, consisting of 8-inch diameter, ADS N-12 corrugated pipe. The collection pipes are slotted and located in trenches backfilled with a coarse filter material, designed to convey recovered solution to the underdrain sump. The collection pipes are designed according to the Burns & Richard (1964) method to resist crushing and wall buckling due to the anticipated loading associated with the maximum height of overlying tailings. The expected vertical and horizontal strains calculated for the underdrain collection pipes are 3.6 percent and -2.4 percent, respectively.

The design analyses to estimate pipe deformation are presented in Appendix D-2.

REFERENCES

Burns, J.Q. & Richard, R.M. 1964. Attenuation of Stresses for Buried Cylinders. Proceedings, Symposium on Soil-Structure Interaction, University of Arizona. September. 378 p.

Lupo, J.F. 2001. Stability of HDPE Pipes Under High Heap Loads, SME, Denver.

U.S. Department of Agriculture, Natural Resources Conservation Service (NRCS). 1994. *National Engineering Handbook, Chapter 26*, October.

APPENDIX D-1

FILTER COMPATIBILITY ANALYSES

OBJECTIVES:

1. Design a soil filter for the tailings underflow material.
2. Determine the maximum pipe perforation size based on the coarse filter material.

GIVEN:

- Soil gradation for the tailings underflow at the Piñon Ridge Project

METHOD:

- This filter design follows the procedures outlined in NRCS (1994), Chapter 26 "Gradation Design of Sand and Gravel Filters".

CONCEPT:

- The general concept for the use for this filter design is diagramed below:

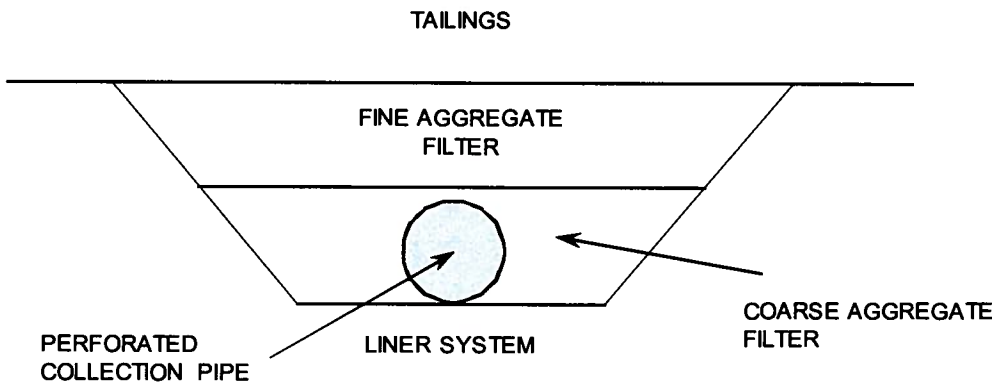

CALCULATIONS:

I. Design of Fine Aggregate Filter

- *Step 1* - Determine Base Soil Material Gradations
  - Gradation of base soil material, shown on Figure 1, is summarized as follows:

Sieve Size	Percent Passing
No. 20 (0.85 mm)	97.5
No. 30 (0.60 mm)	95.9
No. 60 (0.25 mm)	74.4
No. 200 (0.075 mm)	37.9
No. 325 (0.045 mm)	14.6

Note: Gradation supplied by Don Sparling on November 1, 2007

- *Step 2* – Percent Passing the No. 4 Sieve
  - Based on the above supplied gradation, it is assumed that 100 percent of the material passes the No. 4 sieve, so the gradation curves do not need to be adjusted as per Step 3.
- *Step 3* – Adjust Gradation Curves
  - Skip this step.
- *Step 4* – Categorize the Base Material
  - The soil gradation curve shows 37.9 percent passing the No. 200 sieve, which places the base soil into Base Soil Category (BSC) 3 – Silty and clayey sands and gravel as per Table 26-1 (NRCS, 1994).
- *Step 5* – Determine the Maximum Allowable D_{15} for the Filter (D_{15F})
  - As per Table 26-2 (NRCS, 1994), the maximum D_{15} for a BSC 3 soil is:

$$D_{15F} \leq \left(\frac{40-A}{40-15}\right)\left[(4 \times d_{85B}) - 0.7mm\right] + 0.7mm$$

Where A = % passing the #200 sieve.

$$D_{15F} \leq \left(\frac{40-37.9}{40-15}\right)\left[(4 \times 0.38) - 0.7mm\right] + 0.7mm = 0.77mm$$

- *Step 6* – Determine the Minimum Allowable D_{15F}
  - To ensure sufficient permeability, set the minimum D_{15F} as:

$$D_{15F} \geq 4 \cdot D_{15B}, \text{ but not less than 0.1 mm}$$

where D_{15F} = the particle size which 15 percent of material passes for the filter zone and D_{15B} is the particle size which 15 percent of material passes for the base material based on the original, non-adjusted gradation curve.

  - D_{15B} x 4 = 0.045 x 4 = 0.18 mm

- *Step 7* – Adjust Filter Band to Avoid Possibility of Gap Graded Materials
  - Set the ratio of the maximum D_{15F} / minimum D_{15F} to be less than or equal to 5.
  - As the primary purpose is to filter, rather than to drain, fix the minimum D_{15F} as determined above and adjust the maximum D_{15F}.

- Since the ratio between the maximum D_{15F} / minimum D_{15F} (0.77/0.18) is already less than 5, no adjustments are needed:
  - Minimum D_{15F} = 0.18 mm
  - Maximum D_{15F} = 0.77 mm

- *Step 8* – Prevent the Use of Possibly Gap Graded Filters
  - The coefficient of uniformity (CU) of both sides of the filter band should be less than or equal to 6 to prevent the use of possibly gap graded filters.

$$CU = \frac{D_{60}}{D_{10}} \leq 6$$

  - Calculate a maximum D_{10F} as the maximum D_{15F} value divided by 1.2, and calculate the maximum D_{60F} value by multiplying the maximum D_{10F} value by 6.
  - Maximum D_{10F} = 0.77/1.2 = 0.64 mm
  - Maximum D_{60F} = 0.64 x 6 = 3.84 mm
  - Calculate the minimum D_{60F} as one fifth of the maximum D_{60F}
  - Minimum D_{60F} = 3.84 / 5 = 0.77 mm

- *Step 9* – Determine the Minimum D_{5F} and Maximum D_{100F} Sizes of the Filter
  - Use Table 26-5 (NRCS, 1994) to determine these maximum and minimum sizes.
  - Maximum D_{100F} = 75 mm
  - Minimum D_{5F} = 0.075 mm

- *Step 10* – Determine the Maximum D_{90F} to Minimize Segregation During Construction
  - Calculate the minimum D_{10F} as the minimum D_{15F} divided by 1.2.
  - Minimum D_{10F} = 0.18 / 1.2 = 0.15 mm
  - Determine the maximum D_{90F} using Table 26-6 (NRCS, 1994).
  - Maximum D_{90F} = 20 mm

- *Step 11* – Plot the Filter Gradation Boundaries
  - Using the maximum and minimum control points underlined above as guidelines, a design filter band was developed as illustrated in Figure 2.
  - The gradation of the sand filter, shown on Figure 2, is summarized as follows:

Acceptable Fine Aggregate Filter Band	
Sieve Size	**% Passing**
75 mm (3")	100
No. 4 (4.75 mm)	60-100
No. 10 (2.0 mm)	40-90
No. 20 (0.85 mm)	20-65
No. 40 (0.425 mm)	0-40
No. 100 (0.15 mm)	0-10

  - The gradation for ASTM C-33 fine aggregate, also plotted on Figure 2, lies primarily within the acceptable sand filter gradation. Since this is a standard and readily available gradation, ASTM C-33 fine aggregate will be used as the filter material adjacent to the base soil. This gradation is summarized below:

Filter (ASTM C-33 Fine Aggregate)	
Sieve Size	**% Passing**
9.5 mm (3/8")	100
No. 4 (4.75 mm)	95-100
No. 8 (2.36 mm)	80-100
No. 16 (1.18 mm)	50-85
No. 30 (0.6 mm)	25-60
No. 50 (0.355 mm)	10-30
No. 100 (0.15 mm)	2-10

II. Design of Coarse Aggregate Filter

A coarser material than the ASTM C-33 fine aggregate, specified above, is desired for drainage purposes. The method used above is repeated below, using the average grain size distribution of the ASTM C-33 fine aggregate as the base soil.

- *Step 1* - Determine Base Soil Material Gradations
  - Gradation of base soil material, shown on Figure 3, is summarized as follows:

Sieve Size	Percent Passing
9.5 mm (3/8")	100
No. 4 (4.8 mm)	97.5
No. 16 (1.18 mm)	67.5
No. 30 (0.6 mm)	42.5
No. 50 (.0355 mm)	20
No. 100 (0.15 mm)	6

- *Step 2* – Percent Passing the No. 4 Sieve
  - Based on the above supplied gradation, 2.5% of the above soil is retained on the No. 4 sieve, so the gradation curves are adjusted in Step 3.
- *Step 3* – Adjust Gradation Curves
  - The base soil gradation curve was adjusted by multiplying the percent passing each sieve size by 100/97.5, or 1.026. The result is plotted in Figure 3.
- *Step 4* – Categorize the Base Material
  - The soil gradation curve shows less than 15 percent passing the No. 200 sieve, which places the base soil into Base Soil Category (BSC) 4 – Sands and gravel as per Table 26-1 (NRCS, 1994).
- *Step 5* – Determine the Maximum Allowable D_{15} for the Filter (D_{15F})
  - As per Table 26-2 (NRCS, 1994), the maximum D_{15} for a BSC 4 soil is:

$$D_{15F} \leq 4 \times D_{85} \text{ of the base soil after regrading}$$

  - $D_{15F} \leq 4 \times 1.85 = 7.4$ mm
- *Step 6* – Determine the Minimum Allowable D_{15F}
  - To ensure sufficient permeability, set the minimum D_{15F} as:

$$D_{15F} \geq 4 \cdot D_{15B}\text{, but not less than 0.1 mm}$$

where D_{15F} = the particle size which 15 percent of material passes for the coarse filter zone and D_{15B} is the particle size which 15 percent of material passes for the base material (i.e., fine filter zone) based on the original, non-adjusted gradation curve.

  - $D_{15B} \times 4 = 0.22 \times 4 = 0.88$ mm

- *Step 7* – Adjust Filter Band to Avoid Possibility of Gap Graded Materials
  - Set the ratio of the maximum D_{15F} / minimum D_{15F} to be less than or equal to 5.
  - Since the ratio between the maximum D_{15F} / minimum D_{15F} (7.4 /0.88) is greater than 5, the minimum D_{15F} is adjusted as follows:
    - Maximum D_{15F} = 6 mm
    - Minimum D_{15F} = 6 / 5 = 1.2 mm

- *Step 8* – Prevent the Use of Possibly Gap Graded Filters
  - The coefficient of uniformity (CU) of both sides of the filter band should be less than or equal to 6 to prevent the use of possibly gap graded filters.

$$CU = \frac{D_{60}}{D_{10}} \leq 6$$

  - Calculate a maximum D_{10F} as the maximum D_{15F} value divided by 1.2, and calculate the maximum D_{60F} value by multiplying the maximum D_{10F} value by 6.
  - Maximum D_{10F} = 6 / 1.2 = 5 mm
  - Maximum D_{60F} = 5 x 6 = 30 mm
  - Calculate the minimum D_{60F} as one fifth of the maximum D_{60F}
  - Minimum D_{60F} = 30 / 5 = 6 mm

- *Step 9* – Determine the Minimum D_{5F} and Maximum D_{100F} Sizes of the Filter
  - Use Table 26-5 (NRCS, 1994) to determine these maximum and minimum sizes.
  - Maximum D_{100F} = 75 mm
  - Minimum D_{5F} = 0.075 mm

- *Step 10* – Determine the Maximum D_{90F} to Minimize Segregation During Construction
  - Calculate the minimum D_{10F} as the minimum D_{15F} divided by 1.2.
  - Minimum D_{10F} = 1.2 / 1.2 = 1.0 mm

- Determine the maximum D_{90F} using Table 26-6 (NRCS, 1994).
- Maximum D_{90F} = 30 mm

- *Step 11* – Plot the Filter Gradation Boundaries
  - Using the maximum and minimum control points underlined above as guidelines, a design filter band was developed as illustrated in Figure 3.
  - The acceptable design gradation range of the coarse sand filter, shown on Figure 3, is summarized as follows:

Acceptable Coarse Aggregate Filter Band	
Sieve Size	**% Passing**
75 mm (3")	100
19 mm (3/4")	55-100
9.5 mm (3/8")	30-100
No. 4 (4.75 mm)	10-45
No. 20 (0.85 mm)	0-10
No. 200 (0.075 mm)	0-5

  - The gradation for ASTM C-33 Size 8 coarse aggregate, also plotted on Figure 3, lies within the acceptable coarse sand filter gradation. Since this is a standard and readily available gradation, ASTM C-33 Size 8 coarse aggregate could be used as the filter material adjacent to the ASTM C-33 fine aggregate. This coarse aggregate gradation is summarized below:

Filter (ASTM C-33 Size 8 Coarse Aggregate)	
Sieve Size	**% Passing**
12.7 mm (1/2")	100
9.5 mm (3/8")	85-100
No. 4 (4.75 mm)	10-30
No. 8 (2.38 mm)	0-10
No. 16 (1.19 mm)	0-5

  - Although this is a standard gradation, it is also acceptable to use any custom gradation, so long as it falls within the Acceptable Coarse Aggregate Filter Band specified in this section.

III. Design of Perforated Pipe

Perforated pipe will be located within the coarse aggregate filter material for drainage purposes. According to Step 12 (NRCS, 1994), the most stringent requirement for the perforation size is that the perforation width be less than or equal to D_{15}. The average D_{15} for the coarse aggregate is about 4 mm, so the perforation size must be 4 mm or less.

SUMMARY:

A two-layer filter will be used under the tailings cells. Adjacent to the base soil will be ASTM C-33 fine aggregate. Adjacent to the fine aggregate will be ASTM C-33 Size 8 coarse aggregate, or other gradation meeting the coarse aggregate filter band requirements. Perforated pipe used within the coarse aggregate will have a maximum perforation width of 4 mm.

REFERENCES:

U.S. Department of Agriculture, Natural Resources Conservation Service (NRCS) (1994) *National Engineering Handbook, Chapter 26*, October.

U.S. Department of the Interior, Bureau of Reclamation (USBR) (1987) *Design of Small Dams*, Third Edition, 860 pp.

FIGURES

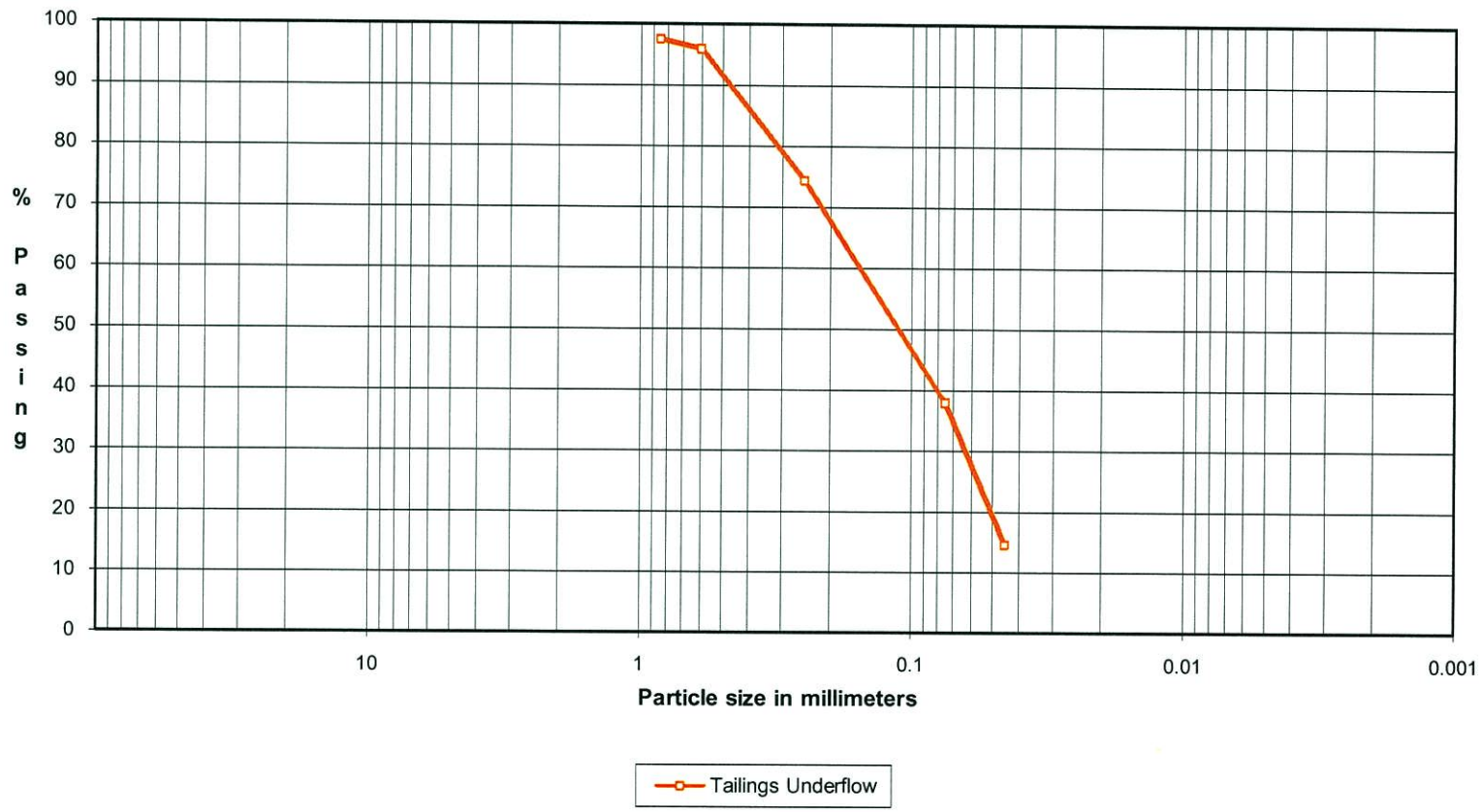

Golder Associates
Denver, Colorado

TITLE
Tailings Underflow Gradation
(From Don Sparling, November 1, 2007)

CLIENT/PROJECT
ENERGY FUELS RESOURCES CORPORATION
PIÑON RIDGE PROJECT - TAILINGS CELL DESIGN
MONTROSE COUNTY, COLORADO

DRAWN	EF	DATE	1/10/2008	JOB NO.	073-81694
CHECKED		SCALE	N.T.S.	DWG. NO.	N/A
REVIEWED		FILE NO.	FilterDesign.xls	FIGURE NO.	1

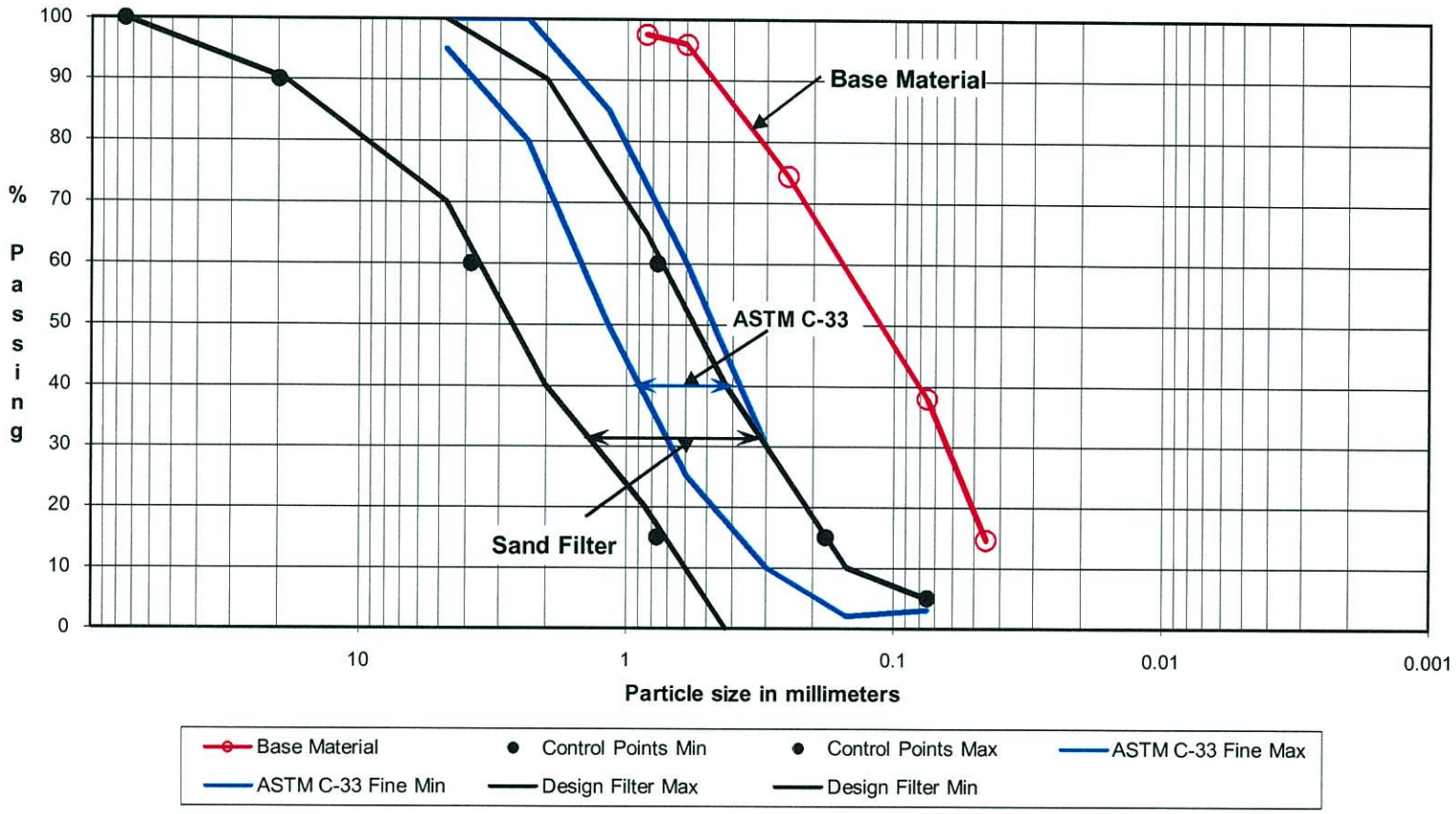

Golder Associates
Denver, Colorado

TITLE

Fine Aggregate Filter Design

CLIENT/PROJECT
ENERGY FUELS RESOURCES CORPORATION
PIÑON RIDGE PROJECT - TAILINGS CELL DESIGN
MONTROSE COUNTY, COLORADO

DRAWN	EF	DATE	1/10/2008	JOB NO.	073-81694
CHECKED		SCALE	N.T.S.	DWG. NO.	N/A
REVIEWED		FILE NO.	FilterDesign.xls	FIGURE NO.	2

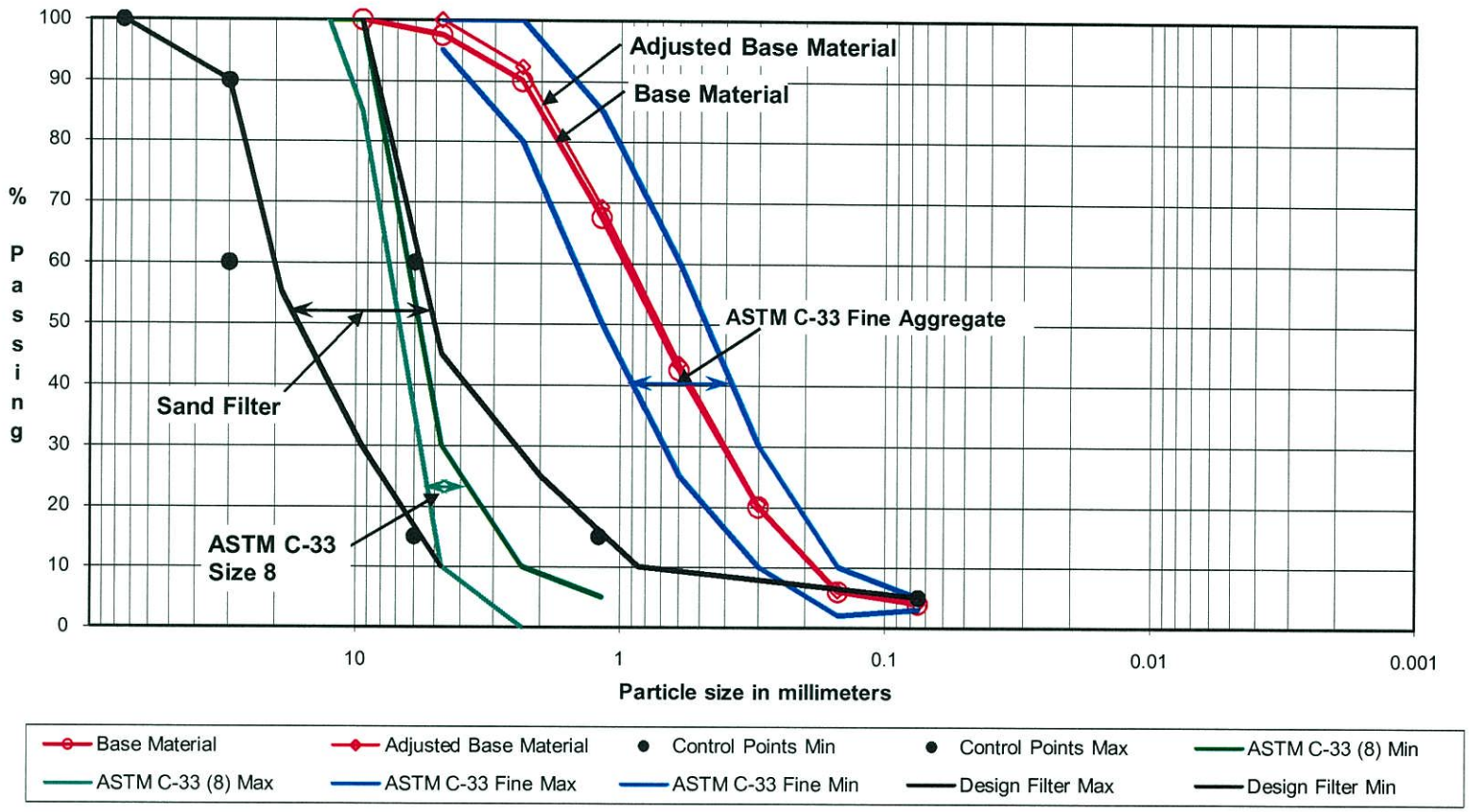

Golder Associates
Denver, Colorado

TITLE

Coarse Aggregate Filter Design

CLIENT/PROJECT
ENERGY FUELS RESOURCES CORPORATION
PIÑON RIDGE PROJECT - TAILINGS CELL DESIGN
MONTROSE COUNTY, COLORADO

DRAWN	EF	DATE	1/10/2008	JOB NO.	073-81694
CHECKED	JE	SCALE	N.T.S.	DWG. NO.	N/A
REVIEWED	KTM	FILE NO.	FilterDesign.xls	FIGURE NO.	3

APPENDIX D-2

PIPING CRUSHING CALCULATIONS

Golder Associates	Subject Piñon Ridge Project	Made by KFM	Job No 073-81694
	Tailings Cell Design	Checked by	Date 5/06/08
	Underdrain Pipe Crushing Calculation	Approved by	Sheet No 1 of 2

OBJECTIVE:

Evaluate the tailings cell underdrain piping system (i.e., underdrain collection pipes and underdrain riser pipes) under loading.

GIVEN:

- Underdrain riser piping consists of two 10-inch SDR11 HDPE pipes (eg., DriscoPlex™), non-corrugated, Series 1500 IPS. Pipe data included in Attachment 1, and summarized below:
  - Pipe outside diameter = 10.75 inches;
  - Pipe inside diameter = 8.679 inches;
  - Pipe wall thickness = 0.977 inches; and
  - Weight of pipe = 13.09 lb/ft.

- Underdrain collection pipe consists of 8-inch diameter ADS N-12 corrugated pipes. Pipe data included in Attachment 1, summarized below:
  - Pipe outside diameter = 9.11 inches;
  - Pipe inside diameter = 7.90 inches; and
  - Weight of pipe = 1.54 lb/ft.

ASSUMPTIONS:

- Underdrain Collection Pipe envelope (coarse underdrain fill and pipe bedding fill) properties assumed as follows:
  - Coarse-grained soils with little or no fines, at about 90 percent relative compaction;
  - Modulus of soil reaction assumed as 1,000 pounds per square inch (psi);
  - Poisson's ratio = 0.30;
  - Soil friction angle = 35 degrees; and
  - Constrained modulus = 3,000 psi.
- Underdrain Riser Pipe envelope (tailings) properties assumed as follows:
  - Fine-grained soils with less than 25 percent sand, at about 85 percent relative compaction;
  - Modulus of soil reaction assumed as 500 pounds per square inch (psi);
  - Poisson's ratio = 0.30;
  - Soil friction angle = 20 degrees; and
  - Constrained modulus = 1,540 psi.
- Modulus of elasticity of pipe = 172 MPa (25,000 psi) (long term value for HDPE);
- Unit weight of tailings assumed as 100 pounds per cubic foot (pcf); and
- Pipe calculations conducted assuming depth of burial of 80 feet.
- Others, as stated

CALCULATIONS:

Underdrain Collection Piping:

- Deformation characteristics calculated using Burns & Richard (1964) method, supplied by ADS manufacturer (see Attachment 3), as follows:
  - Expected vertical deflection is 3.6 percent (positive strain denotes flattening).
  - Expected horizontal deflection is -2.4 percent (negative strain denotes outward deformation).

Underdrain Riser Piping:

- Deformation characteristics calculated using modified Burns & Richard (1964) method (see Attachment 2), as follows:
  - Expected vertical deflections range from 1.8 percent (no slippage, positive strain denotes flattening) to 1.9 percent (full slippage).
  - Expected horizontal deflections range from -2.0 percent (no slippage, negative denotes outward deformation) to -2.2 percent (full slippage).

CONCLUSIONS:

The maximum underdrain riser pipe and underdrain collection pipe vertical strains were estimated as 1.9 and 3.6 percent, respectively. The acceptable maximum deflection for HDPE pipe is on the order of 20 percent, and the estimated deflections are considerably less than 20 percent. Therefore, pipe crushing of the underdrain piping system is not considered a concern.

REFERENCES:

Advanced Drainage Systems, Inc. website, http://www.ads-pipe.com/en/index.asp

Burns, J.Q. & Richard, R.M. (1964). Attenuation of Stresses for Buried Cylinders. Proceedings, Symposium on Soil-Structure Interaction, University of Arizona. September. 378 p.

Lupo, J.F. (2001). Stability of HDPE Pipes Under High Heap Loads, SME, Denver.

Performance Pipe website, http://www.cpchem.com/enu/performance_pipe.asp

ATTACHMENT 1

MANUFACTURER PIPE DATA

PERFORMANCE PIPE
A DIVISION OF CHEVRON PHILLIPS CHEMICAL COMPANY LP

PERFORMANCE PIPE Municipal & Industrial Series/IPS Pipe Data

Pipe weights are calculated in accordance with PPI TR-7. Average inside diameter calculated using nominal OD and minimum wall plus 6% for use in estimating fluid flows. Actual ID will vary. When designing components to fit the pipe ID, refer to pipe dimensions and tolerances in applicable pipe specifications.

Pressure Ratings are for water at 73.4 °F. For other fluid and service temperature, ratings may differ. Refer to Engineering Manual for Chemical and Environmental Considerations.

Pressure Rating		255 psi DR 7.3			200 psi DR 9.0			160 psi DR 11.0			130 psi DR 13.5			
IPS Pipe Size	Nominal OD (in)	Minimum Wall (in)	Average ID (in)	Weight (lbs/ft)	Minimum Wall (in)	Average ID (in)	Weight (lbs/ft)	Minimum Wall (in)	Average ID (in)	Weight (lbs/ft)	Minimum Wall (in)	Average ID (in)	Weight (lbs/ft)	IPS Pipe Size
1 1/4"	1.660	0.227	1.179	0.44	0.184	1.270	0.37	0.151	1.340	0.31	0.123	1.399	0.26	1 1/4"
1 1/2"	1.900	0.260	1.349	0.58	0.211	1.453	0.49	0.173	1.533	0.41	0.141	1.601	0.34	1 1/2"
2"	2.375	0.325	1.686	0.91	0.264	1.815	0.76	0.216	1.917	0.64	0.176	2.002	0.53	2"
3"	3.500	0.479	2.485	1.98	0.389	2.675	1.66	0.318	2.826	1.39	0.259	2.951	1.15	3"
4"	4.500	0.616	3.194	3.27	0.500	3.440	2.74	0.409	3.633	2.29	0.333	3.794	1.90	4"
5 3/8"	5.375	0.736	3.815	4.66	0.597	4.109	3.90	0.489	4.338	3.27	0.398	4.531	2.72	5 3/8"
5"	5.563	0.762	3.948	5.00	0.618	4.253	4.18	0.506	4.490	3.51	0.412	4.690	2.91	5"
6"	6.625	0.908	4.700	7.09	0.736	5.065	5.93	0.602	5.349	4.97	0.491	5.584	4.13	6"
7 1/8"	7.125	0.976	5.056	8.20	0.792	5.446	6.86	0.648	5.751	5.75	0.528	6.006	4.78	7 1/8"
8"	8.625	1.182	6.119	12.01	0.958	6.594	10.05	0.784	6.963	8.42	0.639	7.270	7.00	8"
10"	10.750	1.473	7.627	18.66	1.194	8.219	15.61	0.977	8.679	13.09	0.796	9.062	10.87	10"
12"	12.750	1.747	9.046	26.25	1.417	9.746	21.97	1.159	10.293	18.41	0.944	10.749	15.29	12"
13 3/8"	13.375	1.832	9.491	28.88	1.486	10.225	24.18	1.216	10.797	20.26	0.991	11.274	16.84	13 3/8"
14"	14.000	1.918	9.934	31.64	1.556	10.701	26.50	1.273	11.301	22.20	1.037	11.802	18.44	14"
16"	16.000	2.192	11.353	41.33	1.778	12.231	34.60	1.455	12.915	29.00	1.185	13.488	24.09	16"
18"	18.000	2.466	12.772	52.31	2.000	13.760	43.79	1.636	14.532	36.69	1.333	15.174	30.48	18"
20"	20.000	2.740	14.191	64.58	2.222	15.289	54.05	1.818	16.146	45.30	1.481	16.860	37.63	20"
22"	22.000	3.014	15.610	78.14	2.444	16.819	65.40	2.000	17.760	54.82	1.630	18.544	45.56	22"
24"	24.000	3.288	17.029	93.00	2.667	18.346	77.85	2.182	19.374	65.24	1.778	20.231	54.21	24"
26"	26.000				2.889	19.875	91.36	2.364	20.988	76.57	1.926	21.917	63.62	26"
28"	28.000				3.111	21.405	105.95	2.545	22.605	88.78	2.074	23.603	73.78	28"
30"	30.000				3.333	22.934	121.62	2.727	24.219	101.92	2.222	25.289	84.69	30"
32"	32.000							2.909	25.833	115.97	2.370	26.976	96.35	32"
34"	34.000							3.091	27.447	130.93	2.519	28.660	108.81	34"
36"	36.000							3.273	29.061	146.80	2.667	30.346	121.98	36"
42"	42.000										3.111	35.405	166.00	42"
48"	48.000													48"
54"	54.000													54"

Performance Pipe can produce to specialized pipe dimensions. Check with your Performance Pipe contact for availability of dimensions not listed.

DriscoPlex and PERFORMANCE PIPE™ are trademarks of Chevron Phillips Chemical Company LP

May 2001 Supercedes all previous publications
© 2001 Chevron Phillips Chemical Company LP

Product Notes

Product Note 3.107

Re: Specification for Smooth Interior Corrugated Polyethylene Pipe

Date: January 2005

This specification applies to high density polyethylene corrugated pipe with an integrally formed smooth waterway. Nominal sizes for which this specification is acceptable are 100 – 1500 mm (4 - 60 inch) diameters. Sizes 100 – 1500 mm (4 - 60 inch) shall be either AASHTO Type 'S' or Type 'D' as follows. Sizes 100 – 1500 mm (4 - 60 inch) designated as AASHTO Type 'S' (N-12) shall have a full circular cross-section, with an outer corrugated pipe wall and an essentially smooth inner wall (waterway). Corrugations for Type 'S' sizes 100 – 1500 mm (4 - 60 inch) shall be annular (N-12). Sizes 1050 – 1500 mm (42 thru 60 inch) designated as AASHTO Type 'D' (N-12HC) shall consist of an essentially smooth waterway braced circumferentially with circular ribs which are formed simultaneously with an essentially smooth outer wall. The 1050 – 1500 mm (42 thru 60 inch) (N-12HC) sizes shall conform to AASHTO Type 'D' (which describes dual wall pipe with a smooth waterway).

Pipe manufactured for this specification shall comply with the requirements for test methods, dimensions and markings found in AASHTO Designations M252, and M294. Pipe and fittings shall be made from virgin PE compounds which conform with the applicable current edition of the AASHTO Material Specifications for cell classification as defined and described in ASTM D3350.

The minimum parallel plate stiffness values when tested in accordance with ASTM D2412 shall be as follows:

Diameter (nominal)	Pipe Stiffness (minimum)	Diameter (nominal)	Pipe Stiffness (minimum)
100 mm (4")	340 kN/m^2 (50 pii)	600 mm (24")	235 kN/m^2 (34 pii)
150 mm (6")	340 kN/m^2 (50 pii)	750 mm (30")	195 kN/m^2 (28 pii)
200 mm (8")	340 kN/m^2 (50 pii)	900 mm (36")	150 kN/m^2 (22 pii)
250 mm (10")	340 kN/m^2 (50 pii)	1050 mm (42")	140 kN/m^2 (20 pii)
300 mm (12")	345 kN/m^2 (50 pii)	1200 mm (48")	125 kN/m^2 (18 pii)
375 mm (15")	290 kN/m^2 (42 pii)	1500 mm (60")	95 kN/m^2 (14 pii)
450 mm (18")	275 kN/m^2 (40 pii)		

The fittings shall not reduce or impair the overall integrity or function of the pipeline. Fittings may be either molded or fabricated. Common corrugated fittings include in-line joint fittings, such as couplers and reducers, and branch or complimentary assembly fittings such as tees, wyes and end caps. These fittings may be installed by various methods such as snap-on, bell and spigot, bell – bell and wrap around couplers. Couplers shall provide sufficient longitudinal strength to preserve pipe alignment and prevent separation at the joints. Only fittings supplied or recommended by the manufacturer shall be used. Where designated on the plans or project specifications, an elastomeric gasket meeting the requirements of ASTM F477 shall be supplied.

Installation of the pipe specified above shall be in accordance with either AASHTO Section 30 or ASTM Recommended Practice D2321 as described elsewhere in these specifications and as recommended by the manufacturer.

ADS N-12 PRODUCT INFORMATION SHEET

Nominal Diameter	Inside Diameter, Average	Outside Diameter, Average	Inner Liner Thickness, Minimum	Minimum Pipe Stiffness @ 5% Deflection	Weight kg./6m (lbs./20 ft.)	Area mm^2/mm	"I" cm^4/cm	"C" mm
100 mm (4")	104 mm (4.10")	120 mm (4.78")	0.5 mm (0.020")	340 kN/m^2 50 psi	4.08 kg (9.00 lbs)	1.59 (0.063 in^2/in)	0.010 (0.0006 in^4/in)	3.06 (0.12 in)
150 mm (6")	152 mm (6.00")	176 mm (6.92")	0.5 mm (0.020")	340 kN/m^2 50 psi	7.71 kg (17.00 lbs)	2.15 (0.085 in^2/in)	0.035 (0.0021 in^4/in)	4.94 (0.19 in)
200 mm (8")	200 mm (7.90")	233 mm (9.11")	0.6 mm (0.024")	340 kN/m^2 50 psi	13.97 kg (30.80 lbs)	2.75 (0.108 in^2/in)	0.078 (0.005 in^4/in)	6.36 (0.25 in)
250 mm (10")	251 mm (9.90")	287 mm (11.36")	0.6 mm (0.024")	340 kN/m^2 50 psi	20.96 kg (46.20 lbs)	3.48 (0.137 in^2/in)	0.134 (0.008 in^4/in)	7.58 (0.30 in)
300 mm (12")	308 mm (12.15")	367 mm (14.45")	0.9 mm (0.035")	345 kN/m^2 50 psi	29.60 kg (65.20 lbs)	5.50 (0.217 in^2/in)	0.574 (0.035 in^4/in)	10.92 (0.43 in)
375 mm (15")	380 mm (14.98")	448 mm (17.57")	1.0 mm (0.039")	290 kN/m^2 42 psi	42.00 kg (92.50 lbs)	6.91 (0.272 in^2/in)	0.901 (0.055 in^4/in)	13.21 (0.52 in)
450 mm (18")	459 mm (18.07")	536 mm (21.20")	1.3 mm (0.051")	275 kN/m^2 40 psi	58.38 kg (128.60 lbs)	6.93 (0.273 in^2/in)	1.327 (0.081 in^4/in)	14.48 (0.57 in)
600 mm (24")	612 mm (24.08")	719 mm (27.80")	1.5 mm (0.059")	235 kN/m^2 34 psi	99.93 kg (220.30 lbs)	8.23 (0.324 in^2/in)	2.245 (0.137 in^4/in)	18.80 (0.74 in)
750 mm (30")	762 mm (30.00")	892 mm (35.10")	1.5 mm (0.059")	195 kN/m^2 28 psi	140.00 kg (308.6 lbs)	9.60 (0.378 in^2/in)	4.539 (0.277 in^4/in)	21.84 (0.86 in)
900 mm (36")	914 mm (36.00")	1059 mm (41.70")	1.7 mm (0.067")	150 kN/m^2 22 psi	180.00 kg (396.8 lbs)	10.19 (0.401 in^2/in)	6.555 (0.400 in^4/in)	25.40 (1.00 in)
1050 mm (42") Type S	1054 mm (41.40")	1212 mm (47.70")	1.8 mm (0.070")	140 kN/m^2 20 psi	230.00 kg (570.10 lbs)	11.64 (0.458 in^2/in)	9.373 (0.572 in^4/in)	30.73 (1.21 in)
1050 mm (42") Type D	1054 mm (41.50")	1187 mm (46.75")	1.8 mm (0.070")	140 kN/m^2 20 psi	269.76 kg (594.70 lbs)	14.86 (0.585 in^2/in)	9.685 (0.591 in^4/in)	35.31 (1.39 in)
1200 mm (48") Type S	1209 mm (47.60")	1361 mm (53.60")	1.8 mm (0.070")	125 kN/m^2 18 psi	283.50 kg (625.00 lbs)	12.58 (0.495 in^2/in)	9.341 (0.570 in^4/in)	29.72 (1.17 in)
1200 mm (48") Type D	1208 mm (47.55")	1339 mm (52.70")	1.8 mm (0.070")	125 kN/m^2 18 psi	309.72 kg (682.80 lbs)	14.76 (0.581 in^2/in)	10.090 (0.616 in^4/in)	33.02 (1.30 in)
1500 mm (60") Type S	1512 mm (59.5")	1684 mm (66.3")	1.8 mm (0.070")	95 kN/m^2 14 psi	410.00 kg (903.90 lbs)	14.68 (0.578 in^2/in)	14.09 (0.860 in^4/in)	33.66 (1.32 in)
1500 mm (60") Type D	1514 mm (59.6")	1664 mm (65.5")	1.8 mm (0.070")	95 kN/m^2 14 psi	509.53 kg (1123.30 lbs)	17.15 (0.675 in^2/in)	13.305 (0.812 in^4/in)	36.32 (1.43 in)

Date: January 20, 2005

ATTACHMENT 2

UNDERDRAIN RISER PIPE DEFORMATION CALCULATIONS

BURIED PLASTIC PIPE LOADING WORKSHEET V2.0

[With Incremental Stress Analysis (non-linear)]

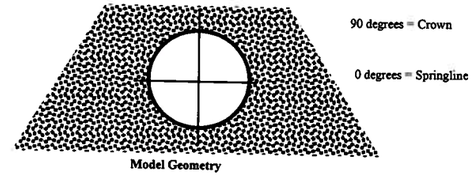

Model Geometry

Golder Associates

Project: Pinon Ridge Project - Tailings Cell Design

By: KFM

Date: 3/28/08

Note: Compression is positive, tension is negative.

SOIL and PIPE Input Data

Material	Cohesion	Friction Angle	Contrained Modulus (psi)	Lateral Pressure Parameters: Lateral Stress Ratio	B	C
Pipe	n/a	n/a				
Soil (Tailings)	0	20	1540.0	0.70	0.849	0.15

Pipe Diameter (in):	10.75		
Pipe ID (in):	8.68		
Weight of Pipe (lb/ft):	13.09	DR=	10.38
Pipe Corrugated (y/n):	n		55.00
Prescribed Constrained Modulus (y/n):	y		0.49
Prescribed Constrained Modulus (psi):	1540		
Pipe Wall Thickness (in):	1.0355		
Pipe Area (in^2/in):	31.602		
Flexural Modulus (psi), E_f =	25,000		
Ring Compression Modulus (psi), E_{rc} =	25,000		
C value (in)	0.518		
Moment of Inertia (in^4/in) non-corrugated:	0.0925		
Moment of Inertia (in^4/in) corrugated (input from manufacturer data):	0.0000	selected I:	0.0925
Stiffness Coefficients			
Flexural Stiffness	121.1		
Ring Compression Stiffness	162656.0	Ring Stiffness Factor:	20.2 Pipe Stiffness Less Than Soil

Shell-Medium Parameters		
UF	0.02	Extensional Flexibility ratio = Compressibility ratio = relative flexibility of pipe and soil under uniform loading.
VF	3.8	Bending Felxibility ratio = Flexibility ratio = relative flexibility of pipe and soil under varying radial and tangential loads.
		If both UF and VF are zero then a perfectly rigid embedded pipe.

Pipe Mean Radius (in):	4.86	
Depth of Burial (ft):	80	
Applied Surface Stress (psf):	0	
Soil Density (pcf):	100	
Total Vertical Stress Component (psf):	8000	Free Field Stress Values
Total Vertical Stress Component (psi):	55.6	

NO INTERFACE SLIPPAGE

Angle	Soil Stresses (psi) Radial	Hoop	Shear	Pipe Displacements (in) Radial	Hoop	Circumferential Thrust	Moment Thrust	Ring Compression Stress (psi)	Ring Compression Strain (in/in)	Ring Shortening (in)	Inner Bending Stress (psi)	Outer Bending Stress (psi)	Total Inner Stress (psi)	Total Outer Stress (psi)
0	54.0	46.7	0.0	-0.097	0.00E+00	297.0	46.8	285.8	0.0114	0.0097	262	-262	548	24
10	53.8	46.5	5.6	-0.089	3.78E-02	294.1	44.3	283.0	0.0113	0.0096	248	-248	531	35
20	53.3	45.9	10.6	-0.064	7.11E-02	285.6	36.9	274.9	0.0110	0.0093	207	-207	482	68
30	52.5	44.9	14.3	-0.025	9.58E-02	272.6	25.7	262.4	0.0105	0.0089	144	-144	406	119
40	51.6	43.8	16.2	0.021	1.09E-01	256.7	11.9	247.0	0.0099	0.0084	67	-67	314	180
50	50.6	42.6	16.2	0.071	1.09E-01	239.8	-2.8	230.7	0.0092	0.0078	-16	16	215	246
60	49.7	41.5	14.3	0.118	9.58E-02	223.8	-16.6	215.4	0.0086	0.0073	-93	93	123	308
70	48.9	40.5	10.6	0.157	7.11E-02	210.9	-27.8	202.9	0.0081	0.0069	-156	156	47	359
80	48.4	39.9	5.6	0.182	3.78E-02	202.4	-35.2	194.8	0.0078	0.0066	-197	197	-2	392
90	48.2	39.7	0.0	0.190	1.36E-17	199.4	-37.7	192.0	0.0077	0.0065	-211	211	-19	403

Vertical Deflection (%):	1.77
Horizontal Deflection (%):	-2.00
Radial Soil Pressure at Crown (psi):	48.2
Circumferential Shortening (in):	0.32
Arc length of each sector (in) =	0.85

6945

Max. Compressive Stress (psi): 548

Max. Tensile Stress (psi): -19

FULL SLIPPAGE

Angle	Soil Stresses (psi) Radial	Hoop	Shear	Pipe Displacements (in) Radial	Hoop	Circumferential Thrust	Moment Thrust	Ring Compression Stress (psi)	Ring Compression Strain (in/in)	Ring Shortening (in)	Inner Bending Stress (psi)	Outer Bending Stress (psi)	Total Inner Stress (psi)	Total Outer Stress (psi)
0	45.3	32.2	0.0	-0.109	0.00E+00	257.6	50.2	247.9	0.0099	0.0084	281	-281	529	-33
10	45.6	32.9	13.3	-0.100	6.00E-02	257.1	47.5	247.4	0.0099	0.0084	266	-266	513	-18
20	46.7	34.8	24.9	-0.073	1.13E-01	255.4	39.5	245.8	0.0098	0.0083	221	-221	467	25
30	48.2	37.7	33.6	-0.031	1.52E-01	252.9	27.4	243.4	0.0097	0.0083	153	-153	397	90
40	50.1	41.3	38.2	0.019	1.73E-01	249.9	12.5	240.5	0.0096	0.0082	70	-70	310	171
50	52.1	45.1	38.2	0.073	1.73E-01	246.6	-3.4	237.3	0.0095	0.0080	-19	19	218	256
60	54.0	48.7	33.6	0.124	1.52E-01	243.5	-18.3	234.4	0.0094	0.0079	-102	102	132	337
70	55.6	51.6	24.9	0.165	1.13E-01	241.0	-30.4	232.0	0.0093	0.0079	-170	170	62	402
80	56.6	53.5	13.3	0.192	6.00E-02	239.4	-38.4	230.4	0.0092	0.0078	-215	215	16	445
90	56.9	54.2	0.0	0.202	2.15E-17	238.8	-41.1	229.8	0.0092	0.0078	-230	230	0	460

Vertical Deflection (%):	1.88
Horizontal Deflection (%):	-2.24
Radial Soil Pressure at Crown (psi):	56.9
Circumferential Shortening (in):	0.32
Arc length of each sector (in) =	0.85

8195

Max. Compressive Stress (psi): 529

Max. Tensile Stress (psi): -33

Free Field Stress: 55.6 psi

Free Field Stress Times Pipe Radius: 214 psi

Radius (in)	CROWN				SPRINGLINE			
	Circumferential Thrust (full slip)	Circumferential Thrust (no slip)	Hoop Stress, psi (full slip)	Hoop Stress, psi (no slip)	Circumferential Thrust (full slip)	Circumferential Thrust (no slip)	Hoop Stress, psi (full slip)	Hoop Stress, psi (no slip)
4.86	238.8	199.4	54.2	39.7	257.6	297.0	32.2	46.7
5.36	263.4	220.0	48.6	38.8	284.1	327.6	39.2	49.0
5.86	288.0	240.5	45.2	38.4	310.7	358.1	43.7	50.5
6.36	312.6	261.0	43.1	38.1	337.2	388.7	46.6	51.6
6.86	337.2	281.6	41.6	38.0	363.7	419.3	48.7	52.3
7.36	361.7	302.1	40.7	38.0	390.2	449.9	50.1	52.9
7.86	386.3	322.6	40.1	38.0	416.7	480.4	51.2	53.3
8.36	410.9	343.2	39.6	38.0	443.3	511.0	52.0	53.7
8.86	435.5	363.7	39.3	38.0	469.8	541.6	52.6	53.9
9.36	460.1	384.2	39.1	38.0	496.3	572.2	53.1	54.1
9.86	484.7	404.7	38.9	38.1	522.8	602.7	53.5	54.3
10.36	509.2	425.3	38.8	38.1	549.3	633.3	53.7	54.4
10.86	533.8	445.8	38.7	38.2	575.9	663.9	54.0	54.6
11.36	558.4	466.3	38.7	38.2	602.4	694.4	54.2	54.7
11.86	583.0	486.9	38.6	38.2	628.9	725.0	54.3	54.8
12.36	607.6	507.4	38.6	38.3	655.4	755.6	54.5	54.8
12.86	632.2	527.9	38.6	38.3	681.9	786.2	54.6	54.9
13.36	656.7	548.5	38.6	38.3	708.5	816.7	54.7	54.9
13.86	681.3	569.0	38.6	38.3	735.0	847.3	54.8	55.0
14.36	705.9	589.5	38.5	38.4	761.5	877.9	54.8	55.0
14.86	730.5	610.1	38.5	38.4	788.0	908.5	54.9	55.1
15.36	755.1	630.6	38.5	38.4	814.5	939.0	55.0	55.1
15.86	779.7	651.1	38.5	38.4	841.1	969.6	55.0	55.1
16.36	804.2	671.6	38.6	38.4	867.6	1000.2	55.1	55.2
16.86	828.8	692.2	38.6	38.5	894.1	1030.7	55.1	55.2
Check Values:	533.8	445.8	44.8	38.4	575.9	663.9	44.5	50.9
Soil Arching:	Negative Arch	Negative Arch	Negative Arch	Negative Arch	Negative Arch	Negative Arch	Positive Arch	Positive Arch

ATTACHMENT 3

UNDERDRAIN COLLECTION PIPE DEFORMATION CALCULATIONS

Burns and Richard Solution | 8" ADS N-12 | 3/28/2008

PIPE PARAMETERS - AASHTO M294, Type S

effective radius (in), R = 4.20
outside diameter (in), D = 9.11
thickness (in), t = 0.610
unit area of wall (in^2/in), A = 0.108
unit moment of inertia (in^4/in), I = 0.0050
flexural modulus (psi), E_f = 110,000
ring compression modulus (psi), E_{rc} = 110,000
flexural stiffness (psi), $K_f = 6E_fI/R^3$ = 45
ring compression stiffness (psi), $K_{rc} = E_{rc}A/R$ = 2,832
distance from inner wall to n.a. (in), c = 0.25

SOIL PARAMETERS - good granular soil

mod of soil reaction at 5' of cover (psi), E'_5 = 1000
modulus of soil reaction (psi), E' = 2,290
Poisson's ratio, u = 0.30
constr mod (psi), $M^*=E^*(1-u)/((1+u)(1-2u))$= 3083.16
lateral stress ratio = K = $u/(1-u)$ = 0.429
sym lateral stress ratio = B = (1/2)(1+K) = 0.714
antisym lat stress ratio = C = (1/2)(1-K) = 0.286

SOIL/STRUCTURE PARAMETERS (full slippage)

ring flexibility ratio, UF =$(1+K)M^*/K_{rc}$ = 1.56
bending flexibility ratio, VF = $(1-K)M^*/K_f$ = 39.4

STRESS FUNCTION COEFFICIENTS

constant term, a_0^* = 0.137
cos(2*theta), a_2^{**} = 0.966
sin(2*theta), b_2^{**} = 0.949

LOAD PARAMETERS

unit weight of soil (lb/ft^3) = 100
height of fill above crown (ft) = 80.0
surcharge pressure (psi), P = 55.6

RESPONSE OF PIPE WALL

deg c.c.w. from horiz	radial soil press P_r(psi)	radial defl w(in)	tang defl v(in)	circum wall thrust N(#/in)	wall bend mom(M) (#-lb/in)	ring comp stress (psi)	inner bend stress (psi)	outer bend stress (psi)	total stress inner (psi)	total stress outer (psi)
0	32.6	-0.051	0.000	146	11	-1351	-556	801	-1907	-551
10	32.7	-0.045	0.018	146	11	-1350	-527	759	-1877	-591
20	33.0	-0.027	0.033	145	9	-1346	-444	640	-1791	-706
30	33.4	0.000	0.044	145	6	-1341	-318	457	-1658	-883
40	34.0	0.033	0.050	144	3	-1334	-162	233	-1496	-1101
50	34.5	0.068	0.050	143	0	-1327	4	-5	-1323	-1332
60	35.1	0.102	0.044	143	-3	-1320	159	-229	-1161	-1549
70	35.5	0.129	0.033	142	-6	-1314	286	-412	-1028	-1726
80	35.8	0.146	0.018	142	-7	-1311	369	-531	-942	-1842
90	35.9	0.152	0.000	141	-8	-1309	397	-572	-912	-1882
100	35.8	0.146	-0.018	142	-7	-1311	369	-531	-942	-1842
110	35.5	0.129	-0.033	142	-6	-1314	286	-412	-1028	-1726
120	35.1	0.102	-0.044	143	-3	-1320	159	-229	-1161	-1549
130	34.5	0.068	-0.050	143	0	-1327	4	-5	-1323	-1332
140	34.0	0.033	-0.050	144	3	-1334	-162	233	-1496	-1101
150	33.4	0.000	-0.044	145	6	-1341	-318	457	-1658	-883
160	33.0	-0.027	-0.033	145	9	-1346	-444	640	-1791	-706
170	32.7	-0.045	-0.018	146	11	-1350	-527	759	-1877	-591
180	32.6	-0.051	0.000	146	11	-1351	-556	801	-1907	-551

CALCULATION OF RING SHORTENING

deg c.c.w. from horiz	ring comp stress (psi)	ring comp strain (in/in)	ring shortening (in)
0	-1351	-0.012285	-0.0090
10	-1350	-0.0123	-0.0090
20	-1346	-0.01224	-0.0090
30	-1341	-0.012189	-0.0089
40	-1334	-0.012127	-0.0089
50	-1327	-0.012061	-0.0088
60	-1320	-0.011998	-0.0088
70	-1314	-0.011947	-0.0087
80	-1311	-0.011914	-0.0087
90	-1309	-0.011902	-0.0087
100	-1311	-0.011914	-0.0087
110	-1314	-0.011947	-0.0087
120	-1320	-0.011998	-0.0088
130	-1327	-0.012061	-0.0088
140	-1334	-0.012127	-0.0089
150	-1341	-0.012189	-0.0089
160	-1346	-0.01224	-0.0090
170	-1350	-0.0123	-0.0090
180	-1351	-0.012285	-0.0090
		SUM (1/2 circle) =	-0.1684

COMMENTS

1. *This is 8" diameter ADS N-12*
2. *Flexural and compressive modulus are taken as 110,000 psi.*
3. ***Typical E'_5 values (in psi) for various soils are listed in the table below:***

Type of soil	Standard AASHTO Relative Compaction 85%	90%	95%
Fine-grained soils with less than 25% sand (CL, ML, DL-ML)	500	700	1000
Coarse-grained soils with fines (SM, SC)	600	1000	1200
Coarse-grained soils with little or no fines (SP, SW, GP, GW)	700	1000	1600

MISC CALCS

Vertical deflection (%) = 3.63
Horizontal deflection (%) = -2.43
Critical Buckling Pressure (psi), P_{cr}= 122.5
Radial Soil Pressure at Crown (psi), P_{act}= 35.9
Arc length of each sector (in) = 0.7322

CIRCUMFERENCE SHORTENS= -0.34 inches

Max. Compressive Stress: -1907 OK (< -3000)
Max. Tensile Stress: -550.7 OK (< 1000)
Circumfence Shortening % (2% Max): -0.012 OK

Calculations by: _____
Engineer