APPENDIX C

ANCHOR TRENCH EVALUATION

APPENDIX C

ANCHOR TRENCH EVALUATION

Due to both the long-term exposure of the tailings cell liner system to wind effects and the long slope runs (i.e., on the order of 300 feet), the liner system design incorporates anchorage and buttressing considerations. This appendix presents the following calculations related to liner anchorage against wind uplift forces:

- Appendix C-1 presents an analysis of wind uplift forces;
- Appendix C-2 presents the anchor trench capacity calculations; and
- Appendix C-3 presents a calculation for buttressing at the tailings cell benches.

A design wind velocity of 23.4 miles per hour (mph) was used based on the highest recorded wind speed at the Grand Junction Airport over the past 23 years. Geomembrane wind uplift analyses, presented in Appendix C-1, were conducted using the method proposed by Giroud et al. (1995). These analyses indicate that the maximum strain on the high density polyethylene (HDPE) geomembrane liner is expected to be 1.5 percent, which is well below the yield elongation of 12 percent for 60 mil HDPE geomembrane liner. Therefore, permanent deformations are not expected in the geomembrane due to wind effects.

The wind uplift analyses also provided design forces and inclinations required for evaluation of the geomembrane anchor trench. Results show the maximum tension in the liner to be 151 pounds per foot (lb/ft) at an inclination of 17 degrees with respect to the surface of the side slope.

The tensile strength capacity of the proposed tailings cell liner anchor trench was evaluated using the methodology presented by Koerner (1998), included in Appendix C-2. These analyses indicate that the anchor trench, as designed, will provide sufficient resistance to the forces developed in the geomembrane due to wind uplift, with a factor of safety greater than 8.

The tailings cells were designed with intermediate benches to provide additional anchorage of the geomembrane liner system. Tailings Cell A is designed with an anchor bench at the mid-height of the tailings cell, while Tailings Cells B and C are designed with two intermediate anchor benches. The following design components have been incorporated into the anchor benches:

- An anchor trench will be constructed to provide additional anchorage of the underlying geosynthetic clay liner (GCL) layer; and

- Buttressing of the liner system will be employed by placement of corrugated HDPE pipes backfilled with soil or grout, and secured by sandbags, to limit uplift of the liner system due to wind effects (see calculation provided in Appendix C-3).

REFERENCES

Giroud, J.P., Pelte, T., and Bathurst, R.J. 1995. "Uplift of geomembrane by wind." *Geosynthetics International*, 2(6), 897-953.

Koerner, R.M. 1998. *Designing With Geosynthetics*. Prentice Hall: Upper Saddle River, New Jersey.

APPENDIX C-1

GEOMEMBRANE WIND UPLIFT ANALYSES

OBJECTIVE:

The objective is to estimate the tensions and deformations of the geomembrane during wind uplift considering anchor trenches at the top of the slopes and buttressing at the base of the slope for the leeward slopes. The cases to be investigated are:

- Case 1 At the base of the tailings cells;
- Case 2 On the leeward slope of the tailings cells A1 and A2; and
- Case 3 On the leeward slope of the tailings cells B and C.

GIVEN:

- The tailings cell layout plan;
- Geomembrane typical properties; and
- Design wind velocity of 23.4 mph (37.7 km/hr) (see Attachment 7).

GEOMETRY:

- The assumed geometrical configuration of the base of the tailing cells and the leeward slopes are shown in Figure 1.

MATERIAL PROPERTIES:

- Geomembrane (Textured HDPE geomembrane, see Attachment 8)
  - Density 58.7 lb/ft^3
  - Thickness 60 mil
  - Yield Strength 126 lb/in = 1,512 lb/ft = 22 KN/m
  - Break Strength 90 lb/in = 1,080 lb/ft = 15.8 KN/m
  - Yield Elongation 12%
  - Break Elongation 100%
  - Mass 0.284 lb/ft^2 =1.43 Kg/m^2

METHOD:

- The analysis of the tension and deformations of the geomembrane during uplift is performed according to Giroud et al.(1995).

ASSUMPTIONS:

- A HDPE pipe filled with sand or grout at the bottom of the cell sideslope is placed to provide anchorage to the geomembrane;
- Two HDPE pipe filled with sand or grout are placed on sideslope benches to provide anchorage to the geomembrane;
- The magnitude of suction does not change in response to changes in geomembrane shape after initial uplift;
- The geomembrane is sealed around its perimeter;
- The problem is assumed to be two dimensional;

- The tensile characteristics of the geomembrane do not depend on temperature;
- The geomembrane did not experience initial uplift leading to a change in aerodynamic flow;
- The tension-strain curve has a peak;
- The suction factors (λ) according to Giroud et al.(1995) assumed in these calculations are: 0.4 for the base of the tailings cells; 0.8 for the leeward slope of the reservoir upper portion tailing cells A1 and A2, 0.6 for the leeward slope of the reservoir, lower portion, tailing cells A1 and A2; 0.9 for the leeward slope of the reservoir, upper portion, tailing cells B and C; 0.7 for the leeward slope of the reservoir, middle portion, tailing cells B and C; and 0.55 for the leeward slope of the reservoir, lower portion, tailing cells B and C

CALCULATIONS:

The calculations are presented in the following Attachments:

- Attachment 1 Case 1 At the base of the reservoir;
- Attachment 2 Case 2 On the leeward slope of the reservoir, upper portion, tailing cells A1 and A2;
- Attachment 3 Case 2 On the leeward slope of the reservoir, lower portion, tailing cells A1 and A2;
- Attachment 4 Case 4 On the leeward slope of the reservoir, upper portion, tailing cells B and C;
- Attachment 5 Case 4 On the leeward slope of the reservoir, middle portion, tailing cells B and C; and
- Attachment 6 Case 4 On the leeward slope of the reservoir, lower portion, tailing cells B and C;

Figure 2 shows a schematic representation of uplifted geomembrane used for developing equations to estimate the deformation in the geomembrane due to wind suctions.

RESULTS:

The following table summarizes the results:

		length (ft)	Strain (%)	u (ft)	T (lb/ft)	θ (degrees)
Cells A,B and C	Cell base	253	1.1	16.6	93	14.6
Cells A1 and A2 Slopeside	upper portion (0.5L)[1]	131	1.5	9.8	151	17.0
	lower portion (0.5L)[1]	131	1.1	8.5	82	14.8
Cells B and C Slopeside	upper portion (0.25L)[1]	66	1.1	4.2	103	14.6
	middle portion (0.33L)[1]	87	1.2	5.9	89	15.5
	lower portion (0.42L)[1]	110	1.0	6.9	82	14.3

[1] L = total length of the slope

CONCLUSIONS:

The analyses shows that the tensions produced in the geomembrane by the wind uplift forces are significantly below the tensile yield strength for the considered geomembrane (i.e. FS > 10). Nevertheless due to the tensile behavior of the geomembrane, deformations are a controlling parameter.

The maximum strain expected in the geomembrane is 1.5%. For all considered cases, the strain in the geomembrane is less than 12%. Therefore permanent deformations are not expected in the geomembrane.

The anchor trench at the top of the cell sideslope should resist a minimum force equal to 151 lb/ft with an inclination (θ) of 17 degrees with respect to the surface of the sideslope.

REFERENCES:

Giroud, J. P., Pelte, T., and Bathurst, R. J. (1995). "Uplift of geomembranes by wind." *Geosynthetics International*, 2(6), 897-953.

FIGURES

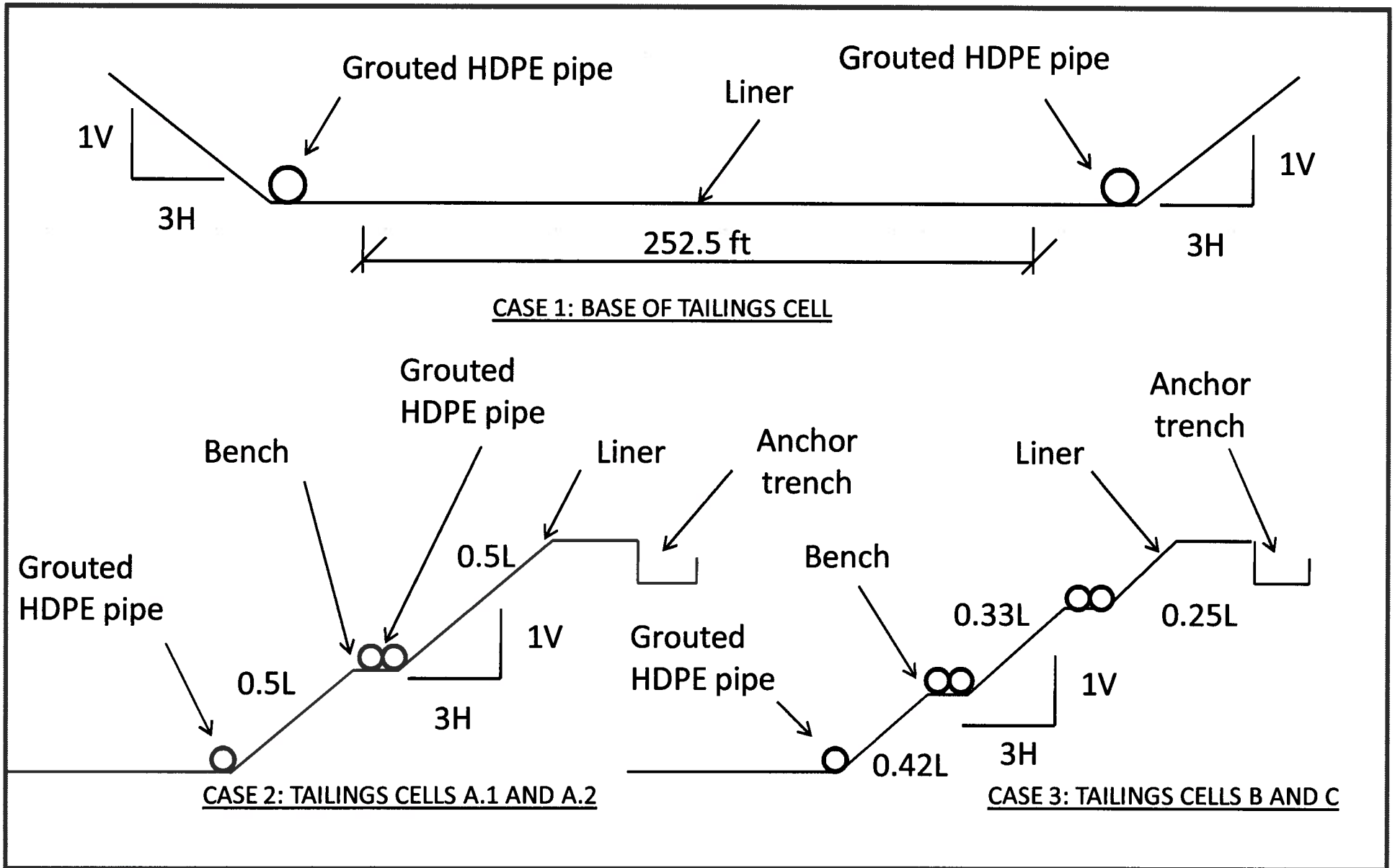

Golder Associates
Denver, Colorado

TITLE
GEOMETRICAL CONFIGURATION FOR CASE 1, CASE 2, AND CASE 3

CLIENT/PROJECT
ENERGY FUELS RESOURCES CORPORATION
PIÑON RIDGE PROJECT

DRAWN	EF	DATE	APRIL 7 2008	JOB NO.	073-81694
CHECKED		SCALE	N.T.S.	DWG. NO.	
REVIEWED	KAM	FILE NO.	Figures-uplift.pptx	FIGURE NO.	1

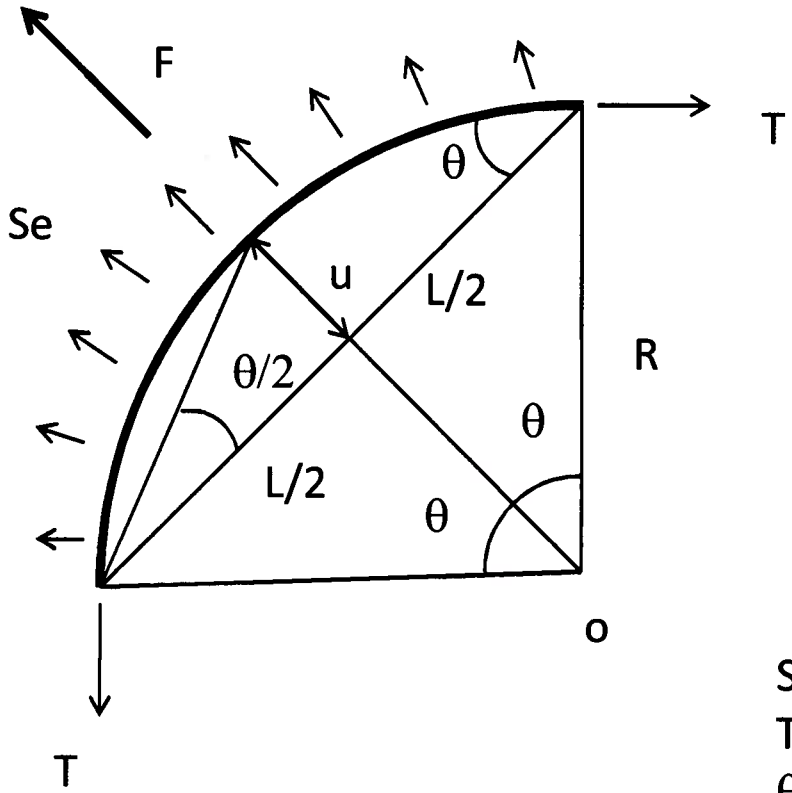

Se = effective suction
T = geomembrane tension
θ = angle
u = uplift
L = considered length
F = resultant force

Reproduced from Giroud et al. (1995) pp. 918

Golder Associates
Denver, Colorado

TITLE
SCHEMATIC REPRESENTATION OF UPLIFT GEOMEMBRANE

CLIENT/PROJECT
ENERGY FUELS RESOURCES CORPORATION
PIÑON RIDGE PROJECT

DRAWN	EF	DATE	APRIL 7 2008	JOB NO.	073-81694
CHECKED		SCALE	N.T.S.	DWG. NO.	
REVIEWED		FILE NO.	Figures-uplift.pptx	FIGURE NO.	2

ATTACHMENT 1

Case 1 At the base of the tailings cells

Suction factor for the bottom of the tailings cells:

$$\lambda := 0.40$$

Calculations were performed using the international unit system (SI), since the empirical equations were developed using this unit system.

Wind velocity (23.4 mph):

$$V := 37.7 \frac{km}{hr} \quad \text{(e.g., 23.4 mph)}$$

Average altitude of the tailings cells above sea level (5480 ft):

$$z := 1670.3 \quad m \quad \text{(e.g.,5480 ft)}$$

The mass per unit area of geomembrane required to resist uplift by a wind of velocity V at altitude z above the sea level is defined by:

$$\mu_{GM} := 0.005085 \cdot \lambda \cdot V^2 \cdot \exp\left(-1.252 \cdot 10^{-4} \cdot z\right) \quad \text{(eq. 21, Giroud et al. 1995)}$$

$$\mu_{GM} = 2.35 \quad \frac{kg}{m^2} \quad \text{required geomembrane mass}$$

The maximum wind velocity that the geomembrane can be subject to without being uplifted:

$$\mu_{GM} := 1.43 \quad \frac{kg}{m^2} \quad \text{geomembrane mass per unit area (60 mil HDPE)}$$

$$Vup := 14.023 \cdot \exp\left(6.259 \cdot 10^{-5} \cdot z\right) \cdot \sqrt{\frac{\mu_{GM}}{\lambda}} \quad \text{(eq. 26, Giroud et al. 1995)}$$

$$Vup = 29.44 \quad \frac{km}{hr} \quad \text{(e.g, 18.3 mph)}$$

Therefore, uplift occurs at the design wind velocity (Vup < V).

The effective suction in the geomembrane is:

$$Se := 0.050 \cdot \lambda \cdot V^2 \cdot \exp\left(-1.252 \cdot 10^{-4} \cdot z\right) - 9.81 \cdot \mu_{GM} \quad \text{(eq. 41, Giroud et al. 1995)}$$

$$Se = 9.03 \quad Pa \quad \text{(e.g., 0.19 lb/ft}^2\text{)}$$

The resultant force of the applied effective suction is equal to:

$$L := 76.96 \quad m \quad \text{(e.g., 252.5 ft)}$$

$$F := Se \cdot L \quad \text{(eq. 42, Giroud et al. 1995)}$$

$$F = 695.21 \quad \frac{N}{m} \quad \text{(e.g., 47.6 lb/ft)}$$

The normalized allowable tension (Tn) is defined as:

$Tall := 22 \frac{kN}{m}$ Break elongation, % = 12

$Tn := \frac{Tall \cdot 1000}{F}$ (eq. 48, Giroud et al. 1995)

$Tn = 31.64$

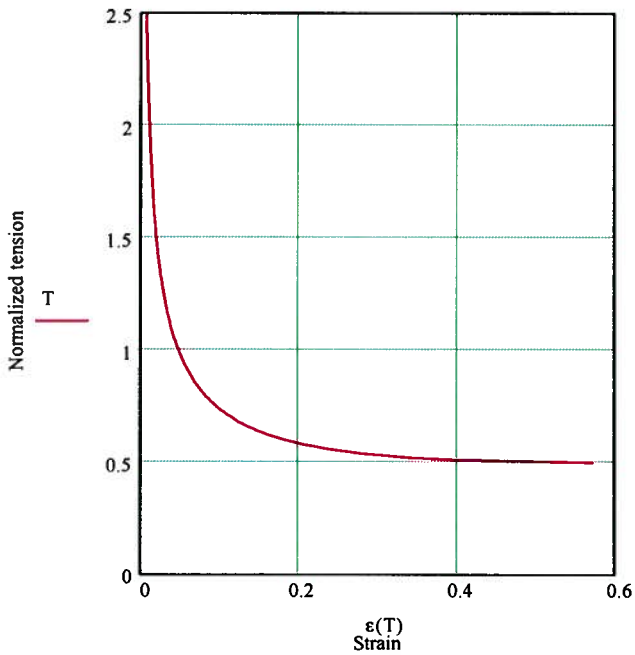

Uplift tension-strain relationship

The determination of tension in the geomembrane is done by trial and error assuming different values for T_{GM} until the calculated strain versus T_{GM} compares with the Geomembrane tension-strain curve.

The strain in the geomembrane is estimated as:

$T_{GM} := 1350 \frac{N}{m}$ Tension in the geomembrane (e.g., 92.5 lb/ft)

$$\varepsilon := \left[\left(2 \cdot \frac{T_{GM} \cdot \operatorname{asin}\left(\frac{F}{2 \cdot T_{GM}}\right)}{F}\right) - 1\right] \cdot 100$$ (eq. 47, Giroud et al. 1995)

$\varepsilon = 1.14$ %

$T_{GM} := \frac{T_{GM}}{1000}$ $\quad T_{GM} = 1.35 \frac{kN}{m}$ (i.e., 92.5 lb/ft)

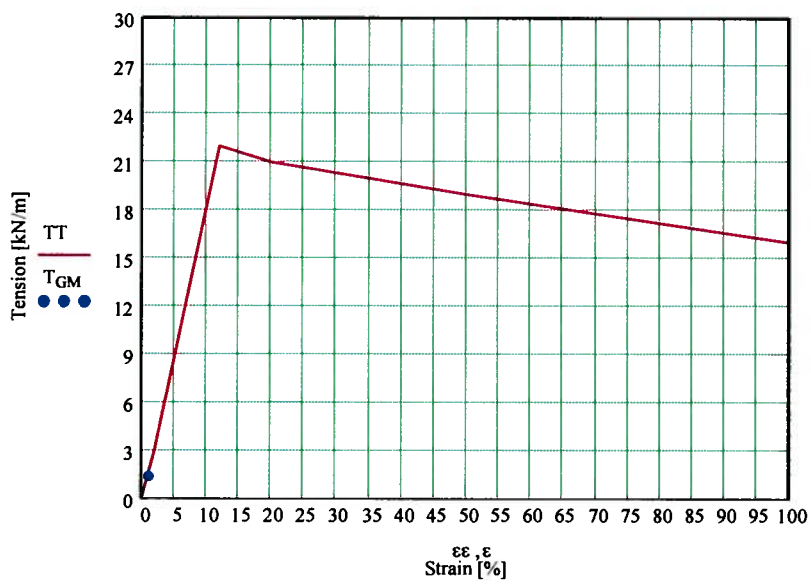

Geomembrane tension-strain curve

The orientation of the geomembrane tension at both extremities of the geomembrane is:

$$Tn := \frac{T_{GM} \cdot 1000}{F}$$

$$Tn = 1.94$$

$$\theta := \operatorname{asin}\left(\frac{1}{2 \cdot Tn}\right)$$ (eq. 56, Giroud et al. 1995)

$\theta = 0.26$ radians (i.e., 14.6 degrees)

The geomembrane uplift is :

$$u := 0.5 \cdot \tan\left(\frac{\theta}{2}\right) \cdot L$$ (eq. 54, Giroud et al. 1995)

$u = 5.04$ m (i.e., 16.6 ft)

Plots data:

$$\varepsilon(T) := 2 \cdot T \cdot \operatorname{asin}\left(\frac{1}{2 \cdot T}\right) - 1$$

$$T := 0.50, 0.51 .. 2.5$$

$$\varepsilon\varepsilon := \begin{pmatrix} 0 \\ 2 \\ 12 \\ 20 \\ 50 \\ 100 \end{pmatrix} \quad TT := \begin{pmatrix} 0 \\ 3 \\ 22 \\ 21 \\ 19 \\ 16 \end{pmatrix}$$

ATTACHMENT 2

Case 2 On the leeward slope of the tailings cells (cells A1 and A2), lower portion

Suction factor for the leeward slope of the tailings cells:

$\lambda := 0.51$ for the lower portion of the slope

Calculations were performed using the international unit system (SI), since the empirical equations were developed using this unit system.

Wind velocity:

$V := 37.7 \frac{km}{hr}$ (e.g., 23.4 mph)

Altitude above sea level:

$z := 1670.3 \ m$ (e.g.,5480 ft)

The mass per unit area of geomembrane required to resist uplift by a wind of velocity V at altitude z above the see level is defined by:

$\mu_{GM} := 0.005085 \cdot \lambda \cdot V^2 \cdot \exp(-1.252 \cdot 10^{-4} \cdot z)$ (eq. 21, Giroud et al. 1995)

$\mu_{GM} = 2.99 \frac{kg}{m^2}$ required geomembrane mass

The maximum wind velocity that the geomembrane can be subject to without being uplifted:

$\mu_{GM} := 1.431 \frac{kg}{m^2}$ geomembrane mass per unit area (60 mil HDPE)

$Vup := 14.023 \cdot \exp(6.259 \cdot 10^{-5} \cdot z) \cdot \sqrt{\frac{\mu_{GM}}{\lambda}}$ (eq. 26, Giroud et al. 1995)

$Vup = 26.078 \frac{km}{hr}$ (e.g, 14.9 mph)

The effective suction in the geomembrane is:

$Se := 0.050 \cdot \lambda \cdot V^2 \cdot \exp(-1.252 \cdot 10^{-4} \cdot z) - 9.81 \cdot \mu_{GM}$ (eq. 41, Giroud et al. 1995)

$Se = 15.366 \ Pa$ (e.g., 0.43 lb/ft^2)

The resultant force of the applied effective suction is equal to:

$L := 40.0 \ m$ (e.g., 131.2 ft)

$F := Se \cdot L$ (eq. 42, Giroud et al. 1995)

$F = 614.625 \frac{N}{m}$ (e.g., 56.3 lb/ft)

The normalized allowable tension (Tn) is defined as:

$$Tall := 22 \frac{kN}{m}$$ Break elongation, % = 12

$$Tn := \frac{Tall \cdot 1000}{F}$$

$$Tn = 35.794$$

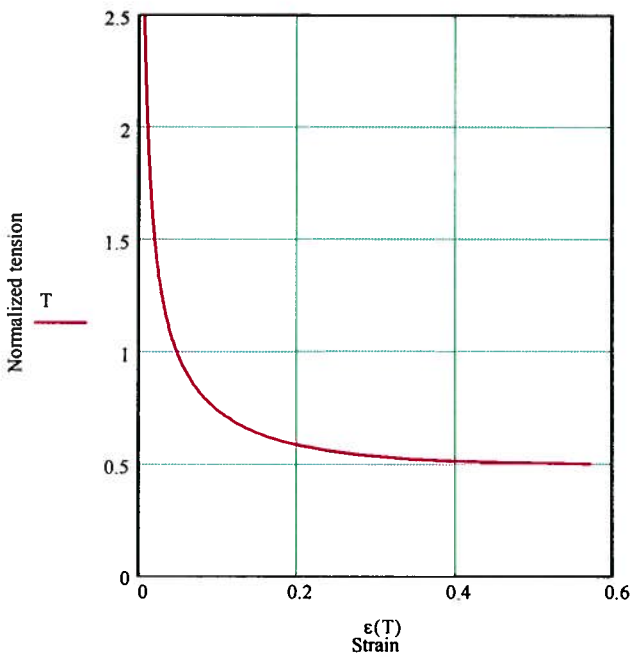

Uplift tension-strain relationship

The determination of tension in the geomembrane is done by trial and error assuming different values for T_{GM} until the calculated strain versus T_{GM} compares with the Geomembrane tension-strain curve.

The strain in the geomembrane is estimated as:

$$T_{GM} := 1200 \frac{N}{m}$$ Tension in the geomembrane (e.g., 82.2 lb/ft)

$$\varepsilon := \left[\left(2 \cdot \frac{T_{GM} \cdot asin\left(\frac{F}{2 \cdot T_{GM}}\right)}{F}\right) - 1\right] \cdot 100$$ (eq. 47, Giroud et al. 1995)

$$\varepsilon = 1.127 \quad \%$$

$T_{GM} := \frac{T_{GM}}{1000}$ $\quad T_{GM} = 1.2 \ \frac{KN}{m}$ (i.e., 82.2 lb/ft)

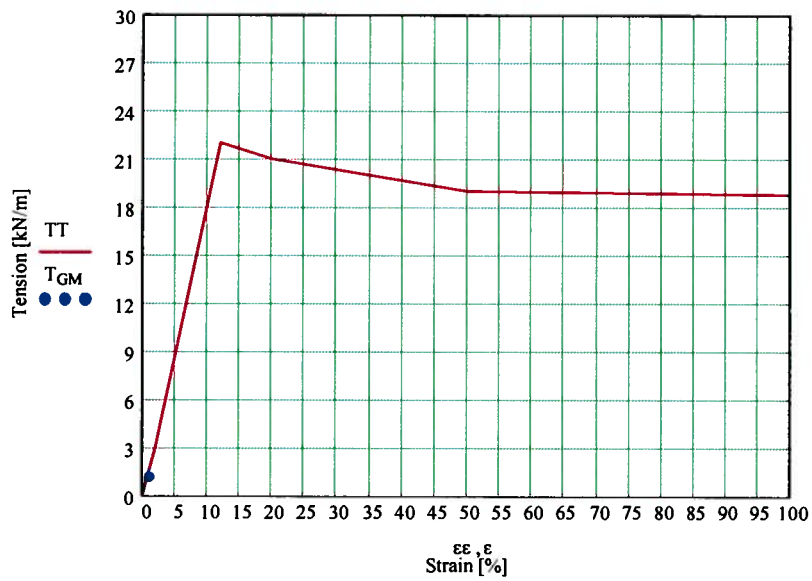

Geomembrane tension-strain curve

The orientation of the geomembrane tension at both extremities of the geomembrane is:

$$Tn := \frac{T_{GM} \cdot 1000}{F}$$

$$Tn = 1.952$$

$$\theta := \operatorname{asin}\left(\frac{1}{2 \cdot Tn}\right)$$ (eq. 56, Giroud et al. 1995)

$\theta = 0.259$ radians (i.e., 14.8 degrees)

The geomembrane uplift is :

$$u := 0.5 \cdot \tan\left(\frac{\theta}{2}\right) \cdot L$$ (eq. 54, Giroud et al. 1995)

$u = 2.604$ m (i.e., 8.54 ft)

Plots data

$$\varepsilon(T) := 2 \cdot T \cdot \operatorname{asin}\left(\frac{1}{2 \cdot T}\right) - 1$$

$$T := 0.50, 0.51 .. 2.5$$

$$\varepsilon\varepsilon := \begin{pmatrix} 0 \\ 2 \\ 12 \\ 20 \\ 50 \\ 800 \end{pmatrix} \quad TT := \begin{pmatrix} 0 \\ 3 \\ 22 \\ 21 \\ 19 \\ 16 \end{pmatrix}$$

ATTACHMENT 3

Case 2 On the leeward slope of the tailings cells (cells A1 and A2), upper portion

Suction factor for the leeward slope of the tailings cells:

$\lambda := 0.8$ for the upper portion of the slope

Calculations were performed using the international unit system (SI), since the empirical equations were developed using this unit system.

Wind velocity:

$V := 37.7 \frac{km}{hr}$ (e.g., 23.4 mph)

Altitude above sea level:

$z := 1670.3 \ m$ (e.g., 5480 ft)

The mass per unit area of geomembrane required to resist uplift by a wind of velocity V at altitude z above the see level is defined by:

$\mu_{GM} := 0.005085 \cdot \lambda \cdot V^2 \cdot \exp(-1.252 \cdot 10^{-4} \cdot z)$ (eq. 21, Giroud et al. 1995)

$\mu_{GM} = 4.691 \frac{kg}{m^2}$ required geomembrane mass

The maximum wind velocity that the geomembrane can be subject to without being uplifted:

$\mu_{GM} := 1.431 \frac{kg}{m^2}$ geomembrane mass per unit area (60 mil HDPE)

$Vup := 14.023 \cdot \exp(6.259 \cdot 10^{-5} \cdot z) \cdot \sqrt{\frac{\mu_{GM}}{\lambda}}$ (eq. 26, Giroud et al. 1995)

$Vup = 20.822 \frac{km}{hr}$ (e.g, 12.9 mph)

The effective suction in the geomembrane is:

$Se := 0.050 \cdot \lambda \cdot V^2 \cdot \exp(-1.252 \cdot 10^{-4} \cdot z) - 9.81 \cdot \mu_{GM}$ (eq. 41, Giroud et al. 1995)

$Se = 32.085 \ Pa$ (e.g., 0.67 lb/ft^2)

The resultant force of the applied effective suction is equal to:

$L := 40.0 \ m$ (e.g., 131.2 ft)

$F := Se \cdot L$ (eq. 42, Giroud et al. 1995)

$F = 1.283 \times 10^3 \frac{N}{m}$ (e.g., 87.9 lb/ft)

The normalized allowable tension (Tn) is defined as:

$$Tall := 22\,\frac{kN}{m}$$ Break elongation, % = 12

$$Tn := \frac{Tall \cdot 1000}{F}$$ (eq. 48, Giroud et al. 1995)

$$Tn = 17.142$$

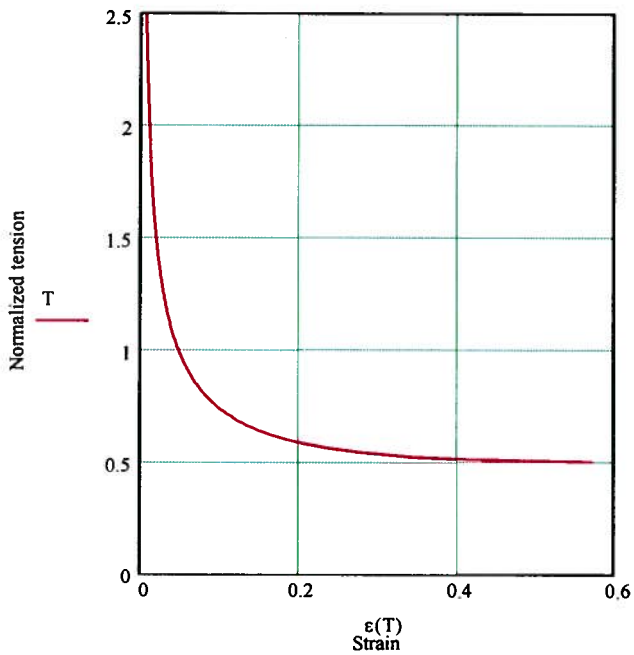

Uplift tension-strain relationship

The determination of tension in the geomembrane is done by trial and error assuming different values for T_{GM} until the calculated strain versus T_{GM} compares with the Geomembrane tension-strain curve.

The strain in the geomembrane is estimated as:

$$T_{GM} := 2200\,\frac{N}{m}$$ Tension in the geomembrane (e.g., 150.8 lb/ft)

$$\varepsilon := \left[\left(2 \cdot \frac{T_{GM} \cdot \operatorname{asin}\left(\frac{F}{2 \cdot T_{GM}}\right)}{F}\right) - 1\right] \cdot 100$$ (eq. 47, Giroud et al. 1995)

$$\varepsilon = 1.475 \quad \%$$

$$T_{GM} := \frac{T_{GM}}{1000} \qquad T_{GM} = 2.2 \ \frac{KN}{m}$$ (i.e., 150.8 lb/ft)

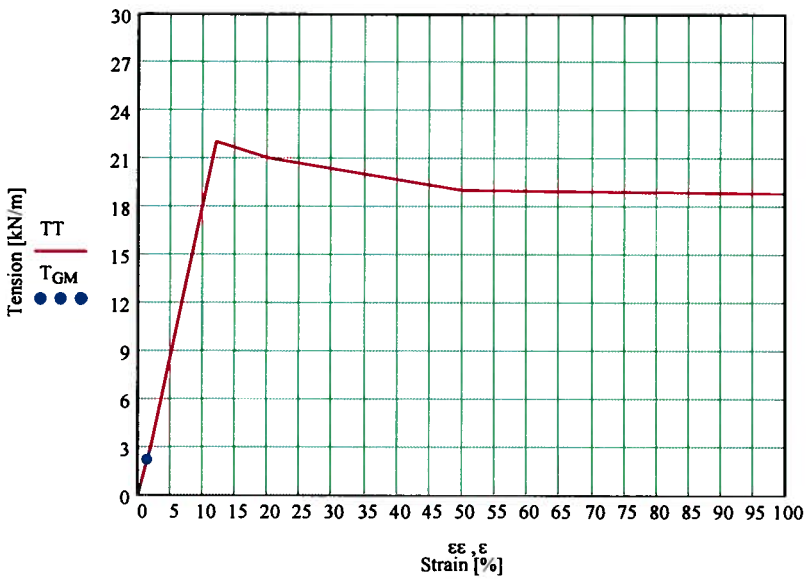

Geomembrane tension-strain curve

The orientation of the geomembrane tension at both extremities of the geomembrane is:

$$Tn := \frac{T_{GM} \cdot 1000}{F}$$

$$Tn = 1.714$$

$$\theta := \operatorname{asin}\left(\frac{1}{2 \cdot Tn}\right)$$ (eq. 56, Giroud et al. 1995)

$$\theta = 0.296 \quad \text{radians}$$ (i.e., 17 degrees)

The geomembrane uplift is :

$$u := 0.5 \cdot \tan\left(\frac{\theta}{2}\right) \cdot L$$ (eq. 54, Giroud et al. 1995)

$$u = 2.982 \quad m$$ (i.e., 9.8 ft)

Plots data

$$\varepsilon(T) := 2 \cdot T \cdot \operatorname{asin}\left(\frac{1}{2 \cdot T}\right) - 1$$

$$T := 0.50, 0.51 .. 2.5$$

$$\varepsilon\varepsilon := \begin{pmatrix} 0 \\ 2 \\ 12 \\ 20 \\ 50 \\ 800 \end{pmatrix} \quad TT := \begin{pmatrix} 0 \\ 3 \\ 22 \\ 21 \\ 19 \\ 16 \end{pmatrix}$$

ATTACHMENT 4

Case 3 On the leeward slope of the tailings cells (cells B and C), upper portion

Suction factor for the leeward slope of the reservoir:

$\lambda := 0.9$ for the upper portion of the slope

Calculations were performed using the international unit system (SI), since the empirical equations were developed using this unit system.

Wind velocity:

$V := 37.7 \frac{km}{hr}$ (e.g., 23.4 mph)

Altitude above sea level:

$z := 1670.3 \ m$ (e.g., 5480 ft)

The mass per unit area of geomembrane required to resist uplift by a wind of velocity V at altitude z above the see level is defined by:

$\mu GM := 0.005085 \cdot \lambda \cdot V^2 \cdot \exp(-1.252 \cdot 10^{-4} \cdot z)$ (eq. 21, Giroud et al. 1995)

$\mu GM = 5.28 \frac{kg}{m^2}$ required geomembrane mass

The maximum wind velocity that the geomembrane can be subject to without being uplifted:

$\mu GM := 1.431 \frac{kg}{m^2}$ geomembrane mass per unit area (60 mil HDPE)

$Vup := 14.023 \cdot \exp(6.259 \cdot 10^{-5} \cdot z) \cdot \sqrt{\frac{\mu GM}{\lambda}}$ (eq. 26, Giroud et al. 1995)

$Vup = 19.63 \frac{km}{hr}$ (e.g, 12.2 mph)

The effective suction in the geomembrane is:

$Se := 0.050 \cdot \lambda \cdot V^2 \cdot \exp(-1.252 \cdot 10^{-4} \cdot z) - 9.81 \cdot \mu GM$ (eq. 41, Giroud et al. 199

$Se = 37.85 \ Pa$ (e.g., 0.79 lb/ft^2)

The resultant force of the applied effective suction is equal to:

$L := 20.0 \ m$ (e.g., 65.6 ft)

$F := Se \cdot L$ (eq. 42, Giroud et al. 1995)

$F = 757.02 \frac{N}{m}$ (e.g., 51.9 lb/ft)

The normalized allowable tension (Tn) is defined as:

$Tall := 22 \frac{kN}{m}$ Break elongation, % = 12

$Tn := \frac{Tall \cdot 1000}{F}$ (eq. 48, Giroud et al. 1995)

$Tn = 29.06$

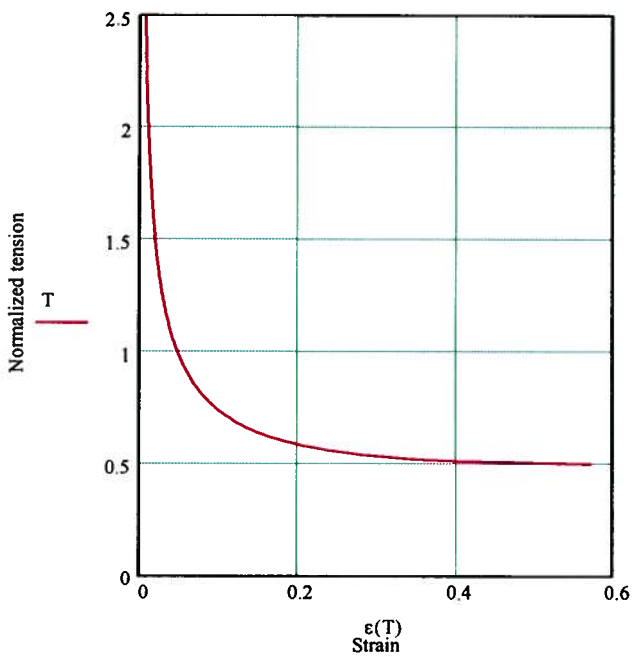

Uplift tension-strain relationship

The determination of thension in the geomembrane is done by trial and error assuming different values for T_{GM} untill the calculated strain versus T_{GM} compares with the Geomembrane tension-strain curve.

The strain in the geomembrane is estimated as:

$TGM := 1500 \frac{N}{m}$ Tension in the geomembrane (e.g., 102.8 lb/ft)

$$\varepsilon := \left[\left(2 \cdot \frac{TGM \cdot asin\left(\frac{F}{2 \cdot TGM}\right)}{F}\right) - 1\right] \cdot 100$$ (eq. 47, Giroud et al. 1995)

$\varepsilon = 1.09$ %

$$TGM := \frac{TGM}{1000} \qquad TGM = 1.5 \ \frac{kN}{m} \qquad \text{(i.e., 102.8 lb/ft)}$$

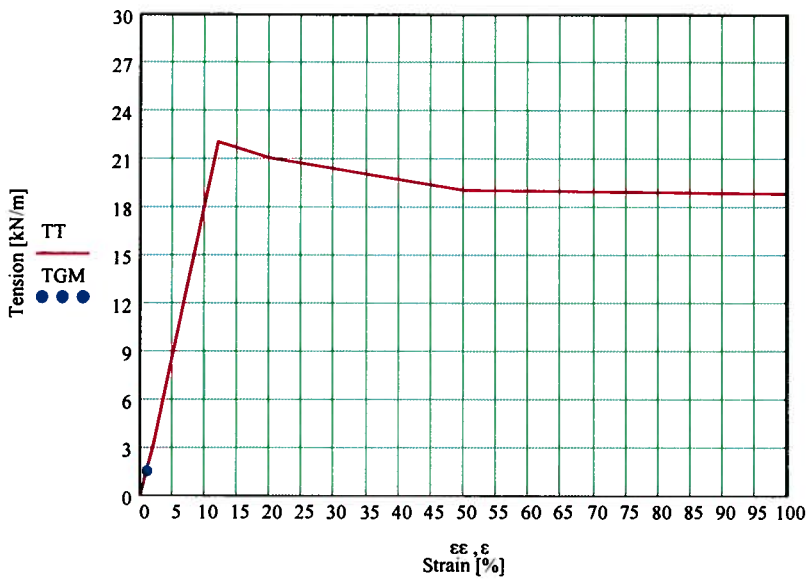

Geomembrane tension-strain curve

The orientation of the geomembrane tension at both extremities of the geomembrane is:

$$Tn := \frac{TGM \cdot 1000}{F}$$

$$Tn = 1.98$$

$$\theta := \operatorname{asin}\left(\frac{1}{2 \cdot Tn}\right) \qquad \text{(eq. 56, Giroud et al. 1995)}$$

$$\theta = 0.26 \quad \text{radians} \qquad \text{(i.e., 14.6 degrees)}$$

The geomembrane uplift is :

$$u := 0.5 \cdot \tan\left(\frac{\theta}{2}\right) \cdot L \qquad \text{(eq. 54, Giroud et al. 1995)}$$

$$u = 1.28 \quad m \qquad \text{(i.e., 4.2 ft)}$$

Plots data

$$\varepsilon(T) := 2 \cdot T \cdot \operatorname{asin}\left(\frac{1}{2 \cdot T}\right) - 1$$

$$T := 0.50, 0.51 .. 2.5$$

$$\varepsilon\varepsilon := \begin{pmatrix} 0 \\ 2 \\ 12 \\ 20 \\ 50 \\ 800 \end{pmatrix} \quad TT := \begin{pmatrix} 0 \\ 3 \\ 22 \\ 21 \\ 19 \\ 16 \end{pmatrix}$$

5)

ATTACHMENT 5

Case 3 On the leeward slope of the tailings cells (cells B and C), middle portion

Suction factor for the leeward slope of the reservoir:

$\lambda := 0.7$ for the middle portion of the slope

Calculations were performed using the international unit system (SI), since the empirical equations were developed using this unit system.

Wind velocity:

$V := 37.7 \frac{km}{hr}$ (e.g., 23.4 mph)

Altitude above sea level:

$z := 1670.3 \ m$ (e.g., 5480 ft)

The mass per unit area of geomembrane required to resist uplift by a wind of velocity V at altitude z above the see level is defined by:

$\mu_{GM} := 0.005085 \cdot \lambda \cdot V^2 \cdot \exp\left(-1.252 \cdot 10^{-4} \cdot z\right)$ (eq. 21, Giroud et al. 1995)

$\mu_{GM} = 4.1 \frac{kg}{m^2}$ required geomembrane mass

The maximum wind velocity that the geomembrane can be subject to without being uplifted:

$\mu_{GM} := 1.431 \frac{kg}{m^2}$ geomembrane mass per unit area (60 mil HDPE)

$Vup := 14.023 \cdot \exp\left(6.259 \cdot 10^{-5} \cdot z\right) \cdot \sqrt{\frac{\mu_{GM}}{\lambda}}$ (eq. 26, Giroud et al. 1995)

$Vup = 22.26 \frac{km}{hr}$ (e.g, 12.9 mph)

The effective suction in the geomemebrane is:

$Se := 0.050 \cdot \lambda \cdot V^2 \cdot \exp\left(-1.252 \cdot 10^{-4} \cdot z\right) - 9.81 \cdot \mu_{GM}$ (eq. 41, Giroud et al. 1995)

$Se = 26.32 \ Pa$ (e.g., 0.55 lb/ft^2)

The resultant force of the applied effective suction is equal to:

$L := 26.4 \ m$ (e.g., 86.6 ft)

$F := Se \cdot L$ (eq. 42, Giroud et al. 1995)

$F = 694.85 \frac{N}{m}$ (e.g., 47.6 lb/ft)

The normalized allowable tension (Tn) is defined as:

$$Tall := 22\,\frac{kN}{m}$$ Break elongation, % = 12

$$Tn := \frac{Tall \cdot 1000}{F}$$ (eq. 48, Giroud et al. 1995)

$$Tn = 31.66$$

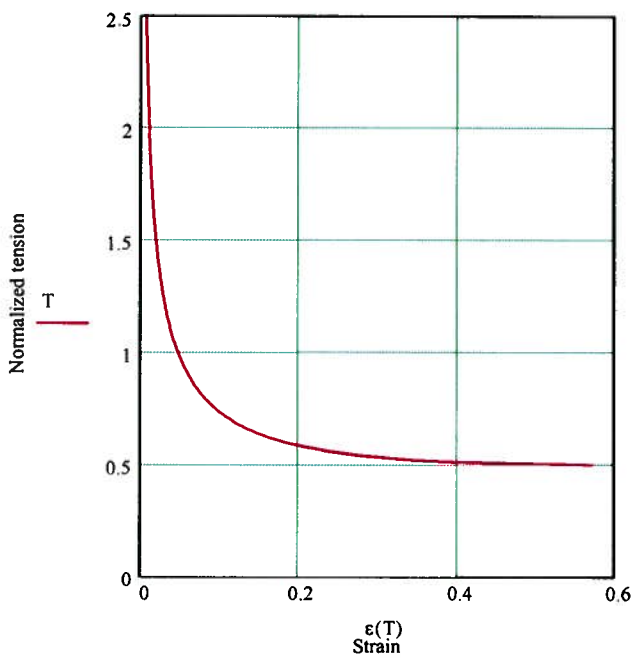

Uplift tension-strain relationship

The determination of thension in the geomembrane is done by trial and error assuming different values for T_{GM} untill the calculated strain versus T_{GM} compares with the Geomembrane tension-strain curve.

The strain in the geomembrane is estimated as:

$$TGM := 1300\,\frac{N}{m}$$ Tension in the geomembrane (e.g., 89.1 lb/ft)

$$\varepsilon := \left[\left(2 \cdot \frac{TGM \cdot asin\left(\frac{F}{2 \cdot TGM}\right)}{F}\right) - 1\right] \cdot 100$$ (eq. 47, Giroud et al. 1995)

$$\varepsilon = 1.23 \quad \%$$

$$TGM := \frac{TGM}{1000} \qquad TGM = 1.3 \times 10^3 \quad \text{i.e., 89.1 lb/ft)}$$

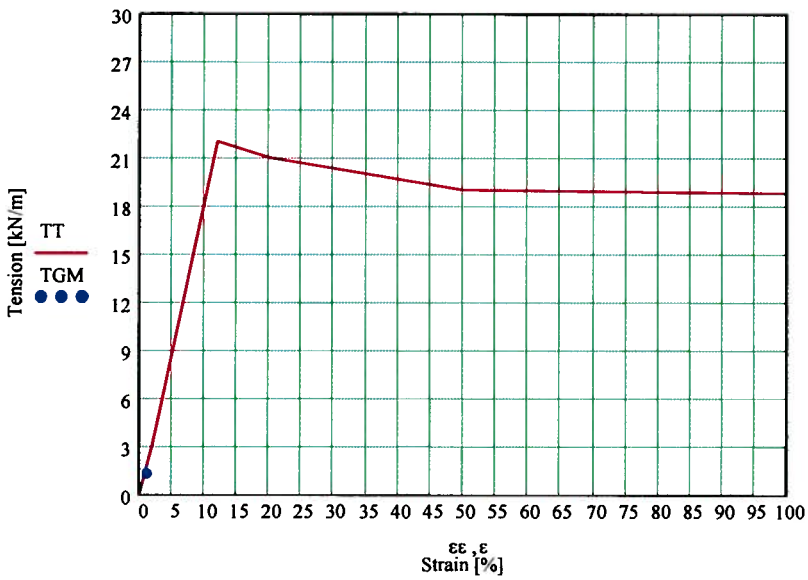

Geomembrane tension-strain curve

The orientation of the geomembrane tension at both extremities of the geomembrane is:

$$Tn := \frac{TGM \cdot 1000}{F}$$

$$Tn = 1.87$$

$$\theta := \operatorname{asin}\left(\frac{1}{2 \cdot Tn}\right) \qquad \text{(eq. 56, Giroud et al. 1995)}$$

$$\theta = 0.27 \quad \text{radians} \qquad \text{(i.e., 15.5 degrees)}$$

The geomembrane uplift is :

$$u := 0.5 \cdot \tan\left(\frac{\theta}{2}\right) \cdot L$$

$$u = 1.8 \quad \text{m} \qquad \text{(i.e., 5.9 ft)}$$

Plots data

$$\varepsilon(T) := 2 \cdot T \cdot \operatorname{asin}\left(\frac{1}{2 \cdot T}\right) - 1$$

$$T := 0.50, 0.51 .. 2.5$$

$$\varepsilon\varepsilon := \begin{pmatrix} 0 \\ 2 \\ 12 \\ 20 \\ 50 \\ 800 \end{pmatrix} \quad TT := \begin{pmatrix} 0 \\ 3 \\ 22 \\ 21 \\ 19 \\ 16 \end{pmatrix}$$

ATTACHMENT 6

Case 3 On the leeward slope of the tailings cells (cells B and C), lower portion

Suction factor for the leeward slope of the reservoir:

$\lambda := 0.55$ for the lower portion of the slope

Calculations were performed using the international unit system (SI), since the empirical equations were developed using this unit system.

Wind velocity:

$V := 37.7 \frac{km}{hr}$ (e.g., 23.4 mph)

Altitude above sea level:

$z := 1670.3 \ m$ (e.g., 5480 ft)

The mass per unit area of geomembrane required to resist uplift by a wind of velocity V at altitude z above the see level is defined by:

$\mu_{GM} := 0.005085 \cdot \lambda \cdot V^2 \cdot \exp(-1.252 \cdot 10^{-4} \cdot z)$ (eq. 21, Giroud et al. 1995)

$\mu_{GM} = 3.22 \frac{kg}{m^2}$ required geomembrane mass

The maximum wind velocity that the geomembrane can be subject to without being uplifted:

$\mu_{GM} := 1.431 \frac{kg}{m^2}$ geomembrane mass per unit area (60 mil HDPE)

$Vup := 14.023 \cdot \exp(6.259 \cdot 10^{-5} \cdot z) \cdot \sqrt{\frac{\mu_{GM}}{\lambda}}$ (eq. 26, Giroud et al. 1995)

$Vup = 25.11 \frac{km}{hr}$ (e.g, 15.6 mph)

The effective suction in the geomembrane is:

$Se := 0.050 \cdot \lambda \cdot V^2 \cdot \exp(-1.252 \cdot 10^{-4} \cdot z) - 9.81 \cdot \mu_{GM}$ (eq. 41, Giroud et al. 1995)

$Se = 17.67 \ Pa$ (e.g., 0.34 lb/ft^2)

The resultant force of the applied effective suction is equal to:

$L := 33.6 \ m$ (e.g., 110.2 ft)

$F := Se \cdot L$ (eq. 42, Giroud et al. 1995)

$F = 593.77 \frac{N}{m}$ (e.g., 40.7 lb/ft)

The normalized allowable tension (Tn) is defined as:

$Tall := 22 \frac{kN}{m}$ Break elongation, % = 12

$Tn := \frac{Tall \cdot 1000}{F}$ (eq. 48, Giroud et al. 1995)

$Tn = 37.05$

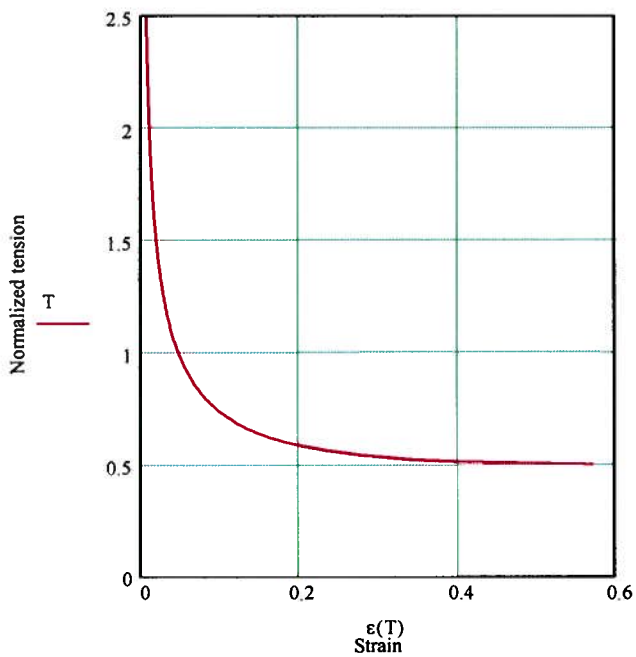

Uplift tension-strain relationship

The determination of thension in the geomembrane is done by trial and error assuming different values for T_{GM} untill the calculated strain versus T_{GM} compares with the Geomembrane tension-strain curve.

The strain in the geomembrane is estimated as:

$T_{GM} := 1200 \frac{N}{m}$ Tension in the geomembrane (e.g., 82.2 lb/ft)

$$\varepsilon := \left[\left(2 \cdot \frac{T_{GM} \cdot \operatorname{asin}\left(\frac{F}{2 \cdot T_{GM}}\right)}{F}\right) - 1\right] \cdot 100$$ (eq. 47, Giroud et al. 1995)

$\varepsilon = 1.05$ %

$$T_{GM} := \frac{T_{GM}}{1000} \qquad T_{GM} = 1.2 \qquad \frac{KN}{m} \quad \text{(i.e., 82.2 ft)}$$

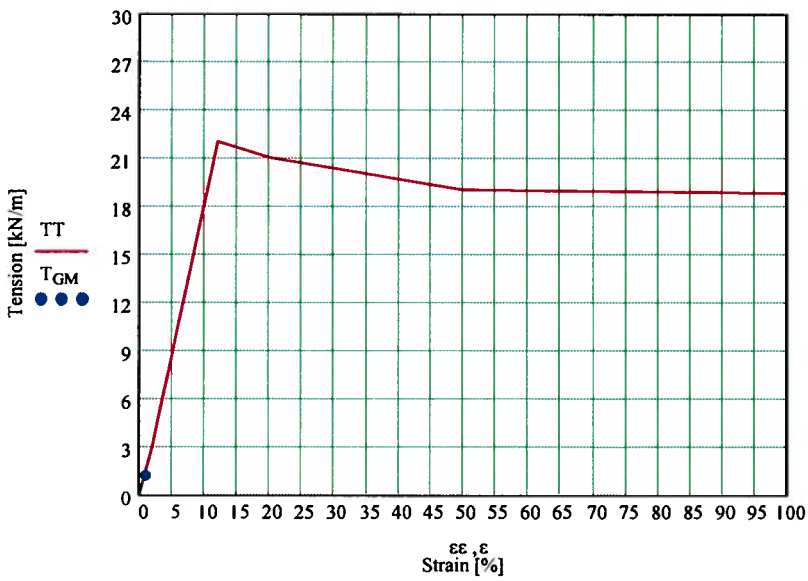

Geomembrane tension-strain curve

The orientation of the geomembrane tension at both extremities of the geomembrane is:

$$Tn := \frac{T_{GM} \cdot 1000}{F}$$

$$Tn = 2.02$$

$$\theta := \operatorname{asin}\left(\frac{1}{2 \cdot Tn}\right) \qquad \text{(eq. 56, Giroud et al. 1995)}$$

$$\theta = 0.25 \quad \text{radians} \qquad \text{(i.e., 14.3 degrees)}$$

The geomembrane uplift is :

$$u := 0.5 \cdot \tan\left(\frac{\theta}{2}\right) \cdot L \qquad \text{(eq. 54, Giroud et al. 1995)}$$

$$u = 2.11 \quad m \qquad \text{(i.e., 6.9 ft)}$$

Plots data

$$\varepsilon(T) := 2 \cdot T \cdot \operatorname{asin}\left(\frac{1}{2 \cdot T}\right) - 1$$

$$T := 0.50, 0.51 .. 2.5$$

$$\varepsilon\varepsilon := \begin{pmatrix} 0 \\ 2 \\ 12 \\ 20 \\ 50 \\ 800 \end{pmatrix} \quad TT := \begin{pmatrix} 0 \\ 3 \\ 22 \\ 21 \\ 19 \\ 16 \end{pmatrix}$$

ATTACHMENT 7

	Grand Junction Airport	Nucla
year	wind speed (mph)	
1984	16.3	-
1985	18.3	-
1986	22.0	-
1987	14.8	-
1988	18.6	-
1989	17.3	-
1990	17.8	-
1991	18.1	-
1992	17.1	-
1993	17.2	-
1994	19.4	-
1995	16.8	-
1996	17.7	-
1997	18.1	-
1998	18.0	16.4
1999	17.1	18.2
2000	18.8	18.6
2001	19.7	14.6
2002	21.2	17.2
2003	19.8	16.8
2004	19.9	14.3
2005	18.0	14.0
2006	21.9	14.8
2007	23.4	15.1
Maximum W(mph)	**23.4**	**18.6**

Wind design **23.4 mph**

ATTACHMENT 8

TEXTURED HDPE GEOMEMBRANE
ENGLISH UNITS

POLY-FLEX
POLYETHYLENE GEOMEMBRANES

Property	Test Method	Minimum Average Values 40 mil	60 mil	80 mil	100 mil
Thickness, mils	ASTM D 5994				
minimum average		38	57	76	95
lowest individual of 8 of 10 readings		36	54	72	90
lowest individual of 10 readings		34	51	68	85
Asperity Height[1], mils	GRI GM12	10	10	10	10
Sheet Density, g/cc	ASTM D 1505/D 792	0.940	0.940	0.940	0.940
Tensile Properties[2]	ASTM D 6693				
1. Yield Strength, lb/in		84	126	168	210
2. Break Strength, lb/in		60	90	120	150
3. Yield Elongation, %		12	12	12	12
4. Break Elongation, %		100	100	100	100
Tear Resistance, lb	ASTM D 1004	28	42	56	70
Puncture Resistance, lb	ASTM D 4833	60	90	120	150
Stress Crack Resistance[3], hrs	ASTM D 5397 (App.)	300	300	300	300
Carbon Black Content[4], %	ASTM D 1603	2.0 - 3.0	2.0 - 3.0	2.0 - 3.0	2.0 - 3.0
Carbon Black Dispersion	ASTM D 5596	–Note 5–			
Oxidative Induction Time (OIT) Standard OIT, minutes	ASTM D 3895	100	100	100	100
Oven Aging at 85°C	ASTM D 5721				
High Pressure OIT - % retained after 90 days	ASTM D 5885	80	80	80	80
UV Resistance[6]	GRI GM11				
High Pressure OIT[7] - % retained after 1600 hrs	ASTM D 5885	50	50	50	50
Seam Properties	ASTM D 6392 (@ 2 in/min)				
1. Shear Strength, lb/in		80	120	160	200
2. Peel Strength, lb/in - Hot Wedge		60	91	121	151
- Extrusion Fillet		52	78	104	130
Roll Dimensions					
1. Width (feet):		23	23	23	23
2. Length (feet)		750	500	375	300
3. Area (square feet):		17,250	11,500	8,625	6,900
4. Gross weight (pounds, approx.)		3,500	3,500	3,470	3,470

1 Of 10 readings; 8 must be ≥ 7 mils and lowest individual reading must be ≥ 5 mils.
2 Machine direction (MD) and cross machine direction (XMD) average values should be on the basis of 5 test specimens each direction. Yield elongation is calculated using a gauge length of 1.3 inches; Break elongation is calculated using a gauge length of 2.0 inches.
3 The yield stress used to calculate the applied load for the SP-NCTL test should be the mean value via MQC testing.
4 Other methods such as ASTM D 4218 or microwave methods are acceptable if an appropriate correlation can be established.
5 Carbon black dispersion for 10 different views: Nine in Categories 1 and 2 with one allowed in Category 3.
6 The condition of the test should be 20 hr. UV cycle at 75°C followed by 4 hr. condensation at 60°C.
7 UV resistance is based on percent retained value regardless of the original HP-OIT value.

This data is provided for informational purposes only and is not intended as a warranty or guarantee. Poly-Flex, Inc. assumes no responsibility in connection with the use of this data. These values are subject to change without notice. REV.11/06

APPENDIX C-2

ANCHOR TRENCH CAPACITY CALCULATIONS

Golder Associates	Subject Piñon Ridge	Made by EF	Job No 073-81694
	Tailings Cell Design	Checked by	Date 02/28/08
	Geomembrane Anchorage Trench Analysis	Approved by KJM	Sheet No 1 of 2

OBJECTIVE:

The objective is to evaluate the tensile strength capacity for the anchorage trench of the liner system at the top of the cell side slope with respect to wind uplift forces on the geomembrane.

GIVEN:

- Tailings cell liner anchor trench geometry.
- Geomembrane properties.
- Cell side slope inclination 3H:1V.
- Resultant stress in the geomembrane due to wind uplift (from calculation sheet "Geomembrane wind uplift analysis"):

  Maximum tension in the geomembrane = 151 lb/ft

  Angle of the force with respect to the side slope surface = 17 degrees

GEOMETRY:

- The proposed geometry for the geomembrane anchor trench is presented in Figure 1.

MATERIAL PROPERTIES:

- Geomembrane (Textured HDPE geomembrane)
  - Density 58.7 lb/ft^3 (i.e., 0.94 g/cm^3)
  - Thickness 60 mil
  - Yield Strength 126 lb/in

- Soil properties (Trench fill)
  - Density 115 lb/ft^3
  - Friction angle 30°

- Peak interface friction angle of 21° for 60 mil textured HDPE geomembrane versus geocomposite (see Attachment 2).

METHOD:

The tensile strength capacity of the anchor trench is evaluated using the methodology presented by Koerner (1998). The methodology is based on a static equilibrium analysis of the problem. Figure 2 shows the free body diagram for the geomembrane considered to develop the analytical equations.

The proposed analytical equation for determination of the allowable geomembrane tension from the anchor trench is:

$$\sum F_x = 0$$

$$T_{allow} \cos\beta = F_{U\sigma} + F_{L\sigma} + F_{LT} - P_A + P_P$$

Where:

T_{allow} = allowable force in geomembrane = σ_{allow} t, where σ_{allow} = allowable stress in geomembrane and t = thickness of geomembrane;
β = tension force angle;
$F_{U\sigma}$ = shear force above geomembrane due to cover soil;
$F_{L\sigma}$ = shear force below geomembrane due to cover soil;
F_{LT} = shear force below geomembrane due to vertical component of T_{allow} ;
P_A = active earth pressure against the backfill side of the anchor trench; and
P_P = passive earth pressure against the in-situ side of the anchor trench.

The shear force below the geomembrane due to vertical component of T_{allow} is defined as:

$$F_{LT} = T_{allow} \sin\beta \tan\delta$$

ASSUMPTIONS:

- The problem is assumed to be two dimensional; and
- The tensile characteristics of the geomembrane do not depend on temperature.

CALCULATIONS:

The calculations are presented in Attachment 1. The cross section of the geomembrane runout section with anchor trench and related stress and forces involved in the analysis is presented in Figure 2.

RESULTS:

From the calculation in Attachment 1, the allowable force in the geomembrane that can be resisted with a tension applied at an angle of 17 degrees with respect to the slope is 1302 lb/ft.

CONCLUSIONS:

According to these analyses the anchor trench will provide sufficient resistance to the forces developed in the geomembrane due to wind uplift. The maximum force to be experienced by the geomembrane was calculated to be 151 lb/ft while the anchor trench provides an allowable resistance force equal to 1302 lb/ft, providing a factor of safety of 8.6.

REFERENCES:

Koerner, R. M. (1998). *Designing with geosynthetics*, Prentice Hall, Upper Saddle River, N.J.

FIGURES

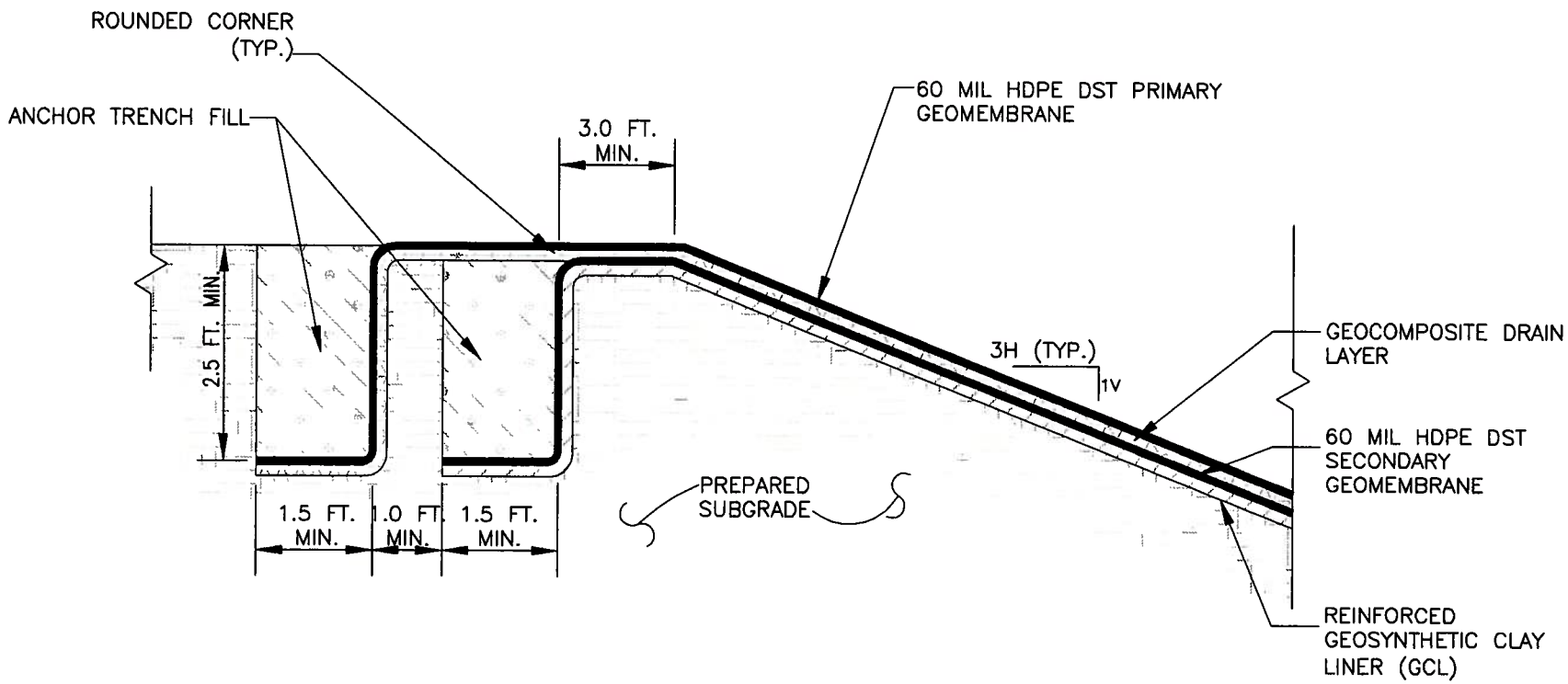

Golder Associates Denver, Colorado

TITLE

TAILINGS CELL LINER ANCHOR TRENCH DETAIL

CLIENT/PROJECT	DRAWN EF	DATE FEBRUARY 12, 2008	JOB NO. 073-81694
ENERGY FUELS RESOURCES CORPORATION PIÑON RIDGE PROJECT - TAILINGS CELLS DESIGN MONTROSE COUNTY, COLORADO	CHECKED	SCALE N.T.S.	DWG. NO.
	REVIEWED	FILE NO.	FIGURE NO. 1

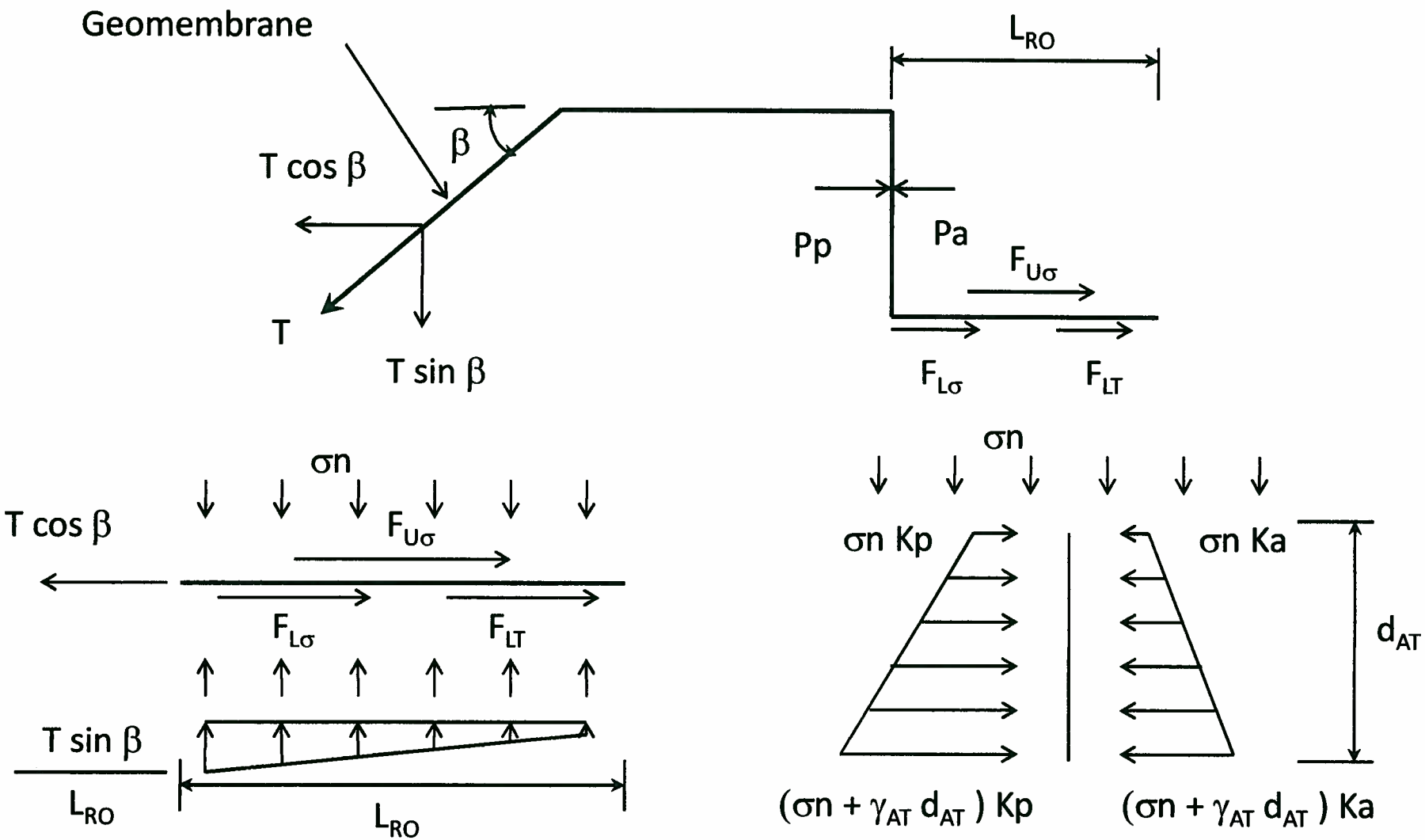

Golder Associates
Denver, Colorado

TITLE
GEOMEMBRANE FREE BODY DIAGRAM

CLIENT/PROJECT
ENERGY FUELS RESOURCES CORPORATION
PIÑON RIDGE PROJECT - TAILINGS CELLS DESIGN
MONTROSE COUNTY, COLORADO

DRAWN	EF	DATE	FEBRUARY 12 2008	JOB NO.	073-81694
CHECKED	JK	SCALE	N.T.S.	DWG. NO.	
REVIEWED	KHM	FILE NO.		FIGURE NO.	2

ATTACHMENT 1

Geomembrane Anchor Trench Analysis

Shear force above geomembrane due to trench fill ($F_{U\sigma}$):

$\gamma_{AT} := 115 \cdot \frac{lb}{ft^3}$ Unit weight of anchor trench fill

$d_{AT} := 2.5 \cdot ft$ Depth of anchor trench

$\sigma n := \gamma_{AT} \cdot d_{AT}$

$\sigma n = 287.5 \frac{lb}{ft^2}$

$\delta := 21deg$ Interface friction angle (weakest interface)

$L_{RO} := 1.5 \cdot ft$ Length of anchor trench

$F_{U\sigma} := \sigma n \cdot \tan(\delta) \cdot L_{RO}$

$F_{U\sigma} = 165.54 \frac{lb}{ft}$

Shear force below geomembrane due to trench fill ($F_{L\sigma}$):

$F_{L\sigma} := \sigma n \cdot \tan(\delta) \cdot L_{RO}$

$F_{L\sigma} = 165.54 \frac{lb}{ft}$

Active earth pressure (P_A):

$\phi := 30deg$ friction angle of soil

$K_A := \left[\tan\left(\left(45deg - \frac{\phi}{2}\right)\right)\right]^2$ Active earth pressure coefficient

$K_A = 0.33$

$P_A := 0.5 \cdot \gamma_{AT} \cdot d_{AT}^2 \cdot K_A$

$P_A = 119.79 \frac{lb}{ft}$

Passive earth pressure (K_P):

$$K_P := \left(\tan\left(45deg + \frac{\phi}{2}\right)\right)^2$$ Passive earth pressure coefficient

$$K_P = 3$$

$$P_P := 0.5 \cdot \gamma_{AT} \cdot d_{AT}^2 \cdot K_P$$

$$P_P = 1078.13 \frac{lb}{ft}$$

Allowable force in geomembrane (T_{allow}):

$\theta := 17deg$ angle of the resultant tension in the geomembrane

$\alpha := atan\left(\frac{1}{3}\right)$ $\alpha = 18.43\,deg$ angle of slope (i.e., 3H:1V)

$$\beta := \alpha - \theta$$

$\beta = 1.43\,deg$ Force angle in the geomembrane - slope angle

$$T_{allow} := \frac{\left(F_{U\sigma} + F_{L\sigma} - P_A + P_P\right)}{\cos(\beta) - \sin(\beta) \cdot \tan(\delta)}$$

$$T_{allow} = 1302.34 \frac{lb}{ft}$$

ATTACHMENT 2

FEBRUARY 2008 073-81694

DIRECT SHEAR TEST RESULTS

ASTM D5321

PROJECT NAME: ENERGY FUELS/GEOTECH PINON RIDGE/CO
SAMPLE NUMBER: 1 (GM vs GC)

INTERFACE TESTED: 60 mil TEXTURED HDPE GEOMEMBRANE vs TEXDRAIN 250 DS 6 GEOCOMPOSITE
TEST CONDITIONS: INTERFACES WETTED, CONSOLIDATED 15 min AT NORMAL LOAD
SHEAR RATE: 0.2 in/min
SUBSTRATE: TEXTURED RIGID PLATES

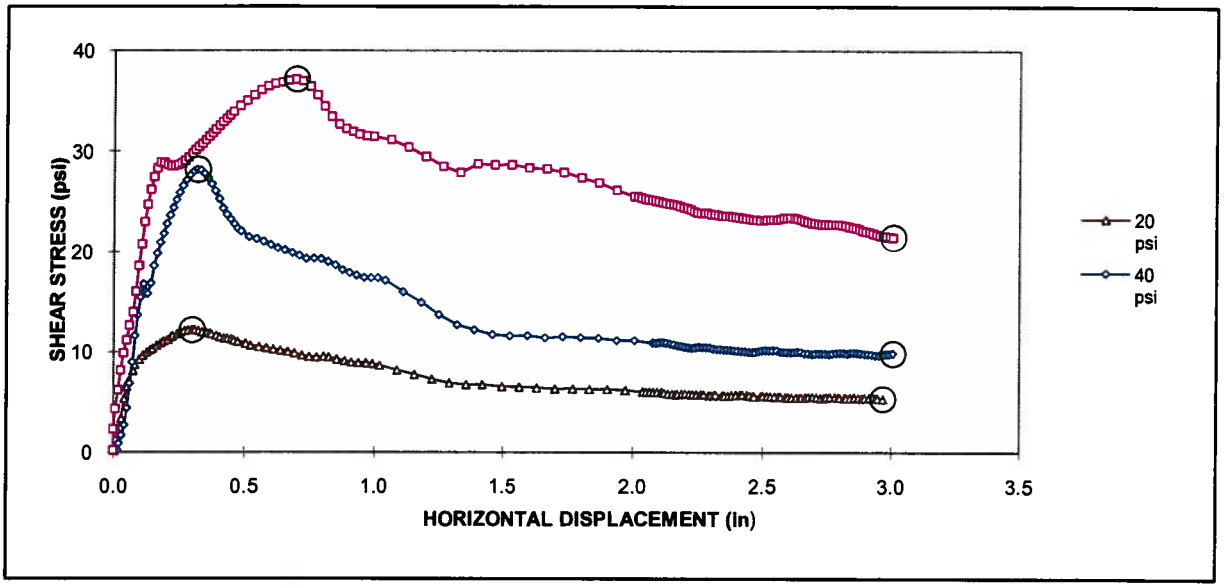

Normal Stress (psi)	Shear Stress Peak[1] (psi)	Shear Stress Residual (psi)	Peak Friction Angle	Peak Adhesion[2] (psi)	Residual Friction Angle	Residual Adhesion[2] (psi)
20	12.2	5.3				
40	28.2	9.9	21.2	7.7	14.8	0.0
80	37.1	21.5				

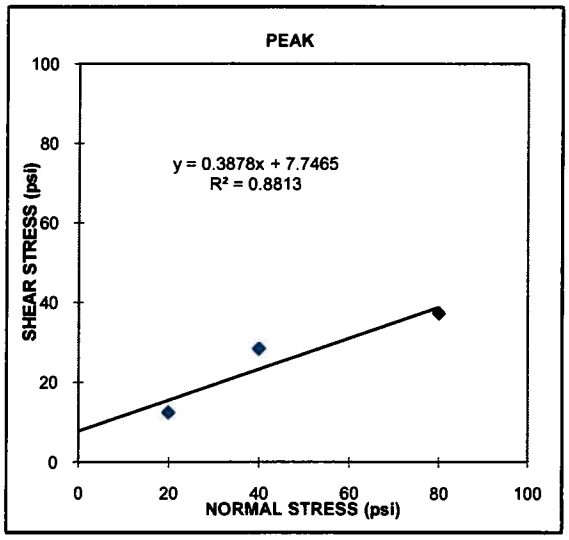

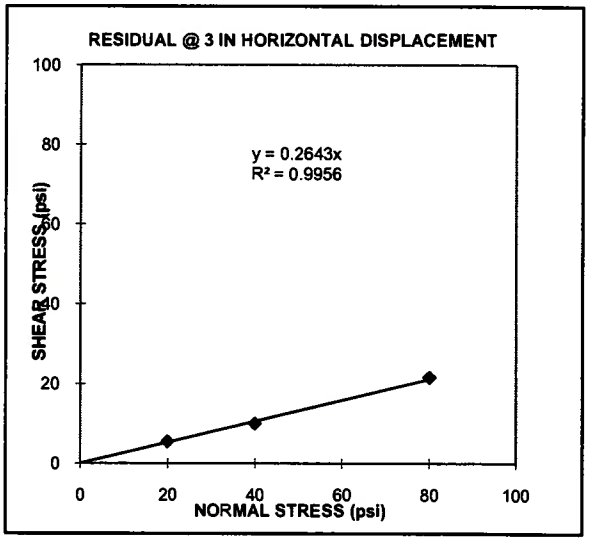

Observations After Test

20 psi: Shearing occurred at the interface between the Geomembrane and the Geocomposite
40 psi: Shearing occurred at the interface between the Geomembrane and the Geocomposite
80 psi: Shearing occurred at the interface between the Geomembrane and the Geocomposite

(1) The peak shear stresses for 20, 40, and 80 psi normal stresses were chosen at 0.300, 0.319, and 0.693 in horizontal displacements, respectively.
(2) The adhesion value is based on the "best-fit" line which may not show true adhesion.

APPENDIX C-3

DESIGN OF GEOMEMBRANE BUTTRESSING

OBJECTIVE:

Calculate the required cross-sectional dimensions of the soil mass in the anchor bench to provide anchorage to the geomembrane against wind action.

GIVEN:

- Calculated tensions in the geomembrane produced by wind uplift considering a wind equal to 23.4 miles per hour (see Table 1, and Golder calculations titled "Geomembrane Wind Uplift Analysis").
- Tailings cells side slopes geometry.
- Weakest interface in the design has an interface friction angle of 20° for GCL versus textured HDPE.

GEOMETRY:

- The geometry of the side slopes and benches are shown in Figure 1.

MATERIAL PROPERTIES:

- Buttress fill
  - Density 110 lb/ft^3 (Assumed)

METHOD:

The analysis of the required cross-sectional dimensions of the soil mass in the anchor bench is performed according to Giroud et al. (1999). This method is based on a static analysis of the recurring forces acting in the anchor bench. Figure 2 shows a free body diagram of the anchor bench that is used to develop the equation to design the geomembrane anchorage against wind action.

The mechanism of failure considered in the analysis of the anchor bench is selected as a function of the magnitude of the resulting forces;

- Anchor failure by sliding in the downslope direction if $T_{dH} > T_{uH}$;
- Anchor failure by sliding in the upslope direction; and if $T_{dH} < T_{uH}$;
- Anchor failure by uplifting $T_{dH} = T_{uH}$.

Table 1 summarizes the considered resultant forces in the geomembrane due to wind action.

Table 1. Resultant forces in the geomembrane due to wind action

		length (ft)	Strain (%)	u (ft)	T (lb/ft)	θ (degrees)
Cells A,B and C	Bottom reservoir	253	1.1	16.6	93	14.6
Cells A1 and A2 Slopeside	upper portion (0.5L)[1]	131	1.5	9.8	151	17.0
	lower portion (0.5L)[1]	131	1.1	8.5	82	14.8
Cells B and C Slopeside	upper portion (0.25L)[1]	66	1.1	4.2	103	14.6
	middle portion (0.33L)[1]	87	1.2	5.9	89	15.5
	lower portion (0.42L)[1]	110	1.0	6.9	82	14.3

[1] L = total length of the slope

ASSUMPTIONS:

- The geomembrane is continuous through the anchor bench;
- The bottom of the tailing cells is assumed to have a 0.0% slope; and
- A factor of safety equal to 1.5 is used.

CALCULATIONS:

The calculations are presented in Attachment 1.

RESULTS:

Table 2 summarizes the results of the calculation presented in Attachment 1:

Tailing Cell	Bench location	Required Soil Area (ft^2)
A1 and A2	Midheight bench	2.7
	Toe of slope	1.7
B and D	Upper bench	0.9
	Middle bench	1.1
	Toe of slope	1.7

CONCLUSIONS:

The maximum cross sectional area of buttress fill required to prevent geomembrane uplift at the anchor benches is 2.7 ft^2. Therefore, two 18-inch diameter HDPE pipes filled with sand or grout placed at the anchor benches along the sideslope and one 18-inch diameter HDPE pipe filled with sand or grout placed at the anchor toe will provide sufficient anchorage to the geomembrane against wind action.

REFERENCES:

Giroud, J. P., Gleason, M. H., and Zornberg, J. G. (1999). "Design of geomembrane anchorage against wind action." *Geosynthetics International*, 6(6).

FIGURES

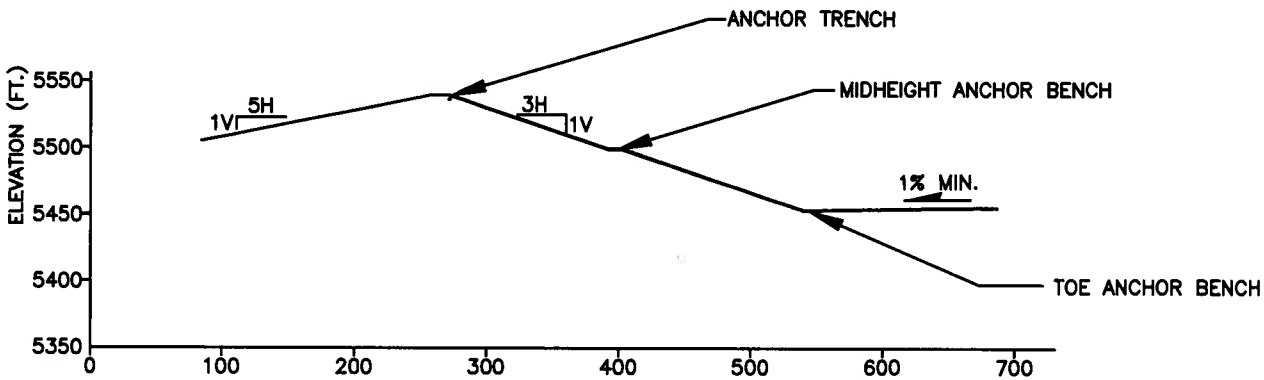

TAILING CELLS A1 AND A2 SLOPE SIDE CROSS SECTION

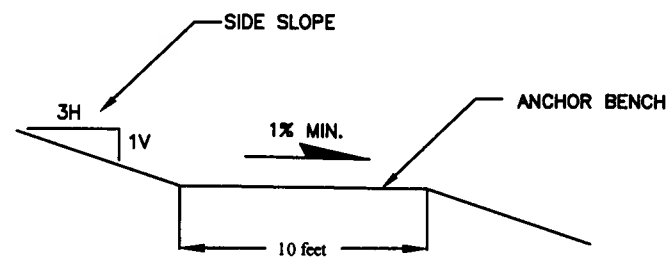

ANCHOR BENCH DETAIL

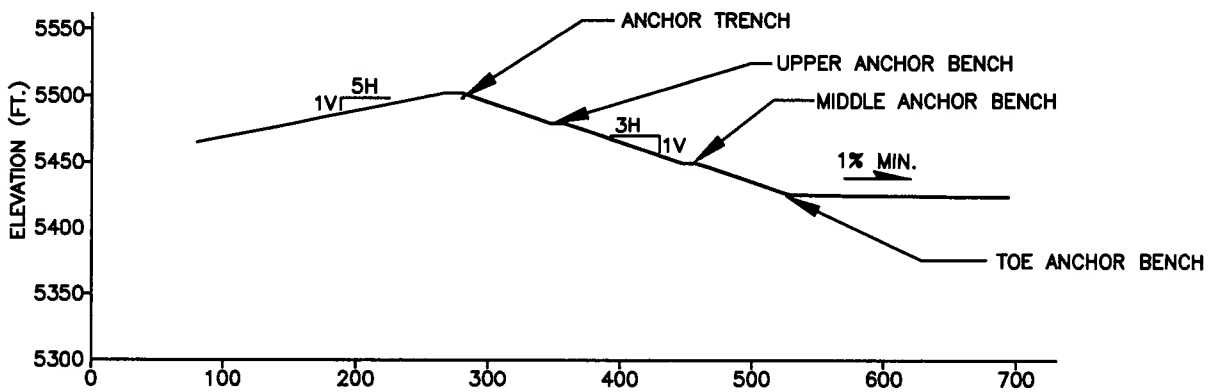

TAILING CELLS B AND C SLOPE SIDE CROSS SECTION

Golder Associates Denver, Colorado

TITLE

TAILINGS CELLS SLOPE DETAILS

CLIENT/PROJECT

ENERGY FUELS RESOURCES CORPORATION
PIÑON RIDGE PROJECT - TAILINGS CELLS DESIGN
MONTROSE COUNTY, COLORADO

DRAWN	EF	DATE	FEBRUARY 22, 2008	JOB NO.	073-81694
CHECKED		SCALE	N.T.S.	DWG. NO.	
REVIEWED	KAM	FILE NO.	Figures-anchorage.dwg	FIGURE NO.	1

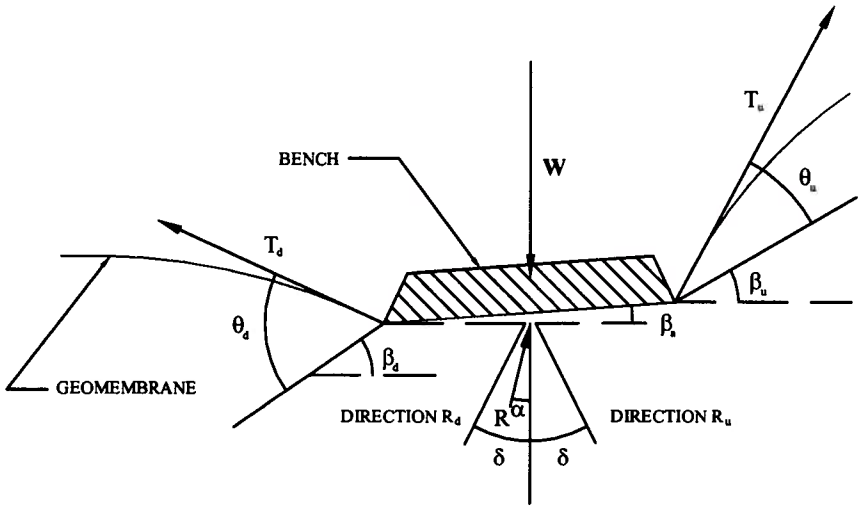

FREE BODY DIAGRAM

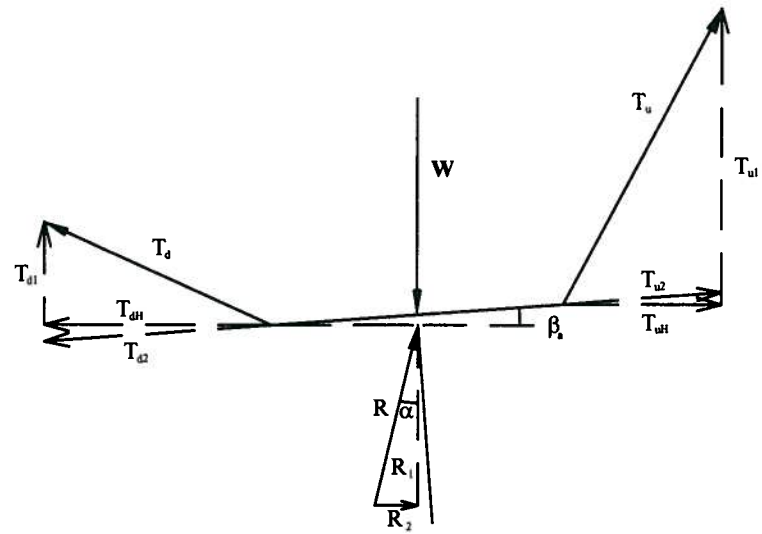

DECOMPOSITION OF THE FORCES ACTING ON AN ANCHOR BENCH

Reference
Giroud et al. (1999)

Golder Associates Denver, Colorado

TITLE

FORCES ACTING ON AN ANCHOR BENCH

CLIENT/PROJECT
ENERGY FUELS RESOURCES CORPORATION
PIÑON RIDGE PROJECT - TAILINGS CELLS DESIGN
MONTROSE COUNTY, COLORADO

DRAWN EF	DATE FEBRUARY 22, 2008	JOB NO. 073-81694
CHECKED JL	SCALE N.T.S.	DWG. NO.
REVIEWED KAM	FILE NO. Figures-anchorage.dwg	FIGURE NO. 2

ATTACHMENT 1

Design of Geomembrane Anchorage Against Wind Action

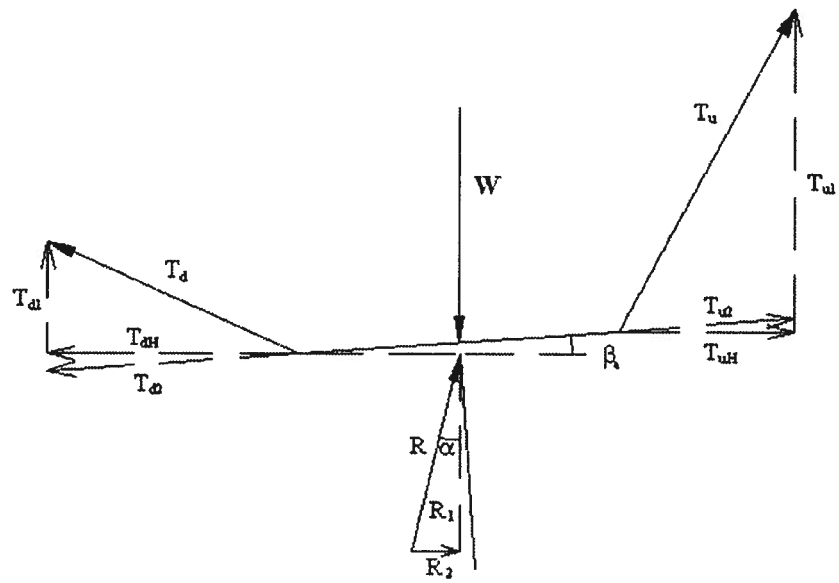

Cells A1 and A2

Midheight bench

$T_d := 82.2 \ \frac{lb}{ft}$ downslope tension

$\theta_d := 14.8$ degrees angle of downslope tension

$T_u := 150.8 \ \frac{lb}{ft}$ upslope tension

$\theta_u := 17$ degrees angle of upslope tension

$\beta_d := 18.435$ degrees slope inclination 3H:1V

$\beta_u := \beta_d$

$\beta_a := 0.573$ degrees bench inclination

$\delta := 20$ degrees interface friction angle soil/geomembrane

Sliding direction:

Horizontal projections

$$T_{dH} := T_d \cdot \cos\left[\left(\theta_d - \beta_d\right) \cdot \frac{\pi}{180}\right]$$

$$T_{dH} = 82 \quad \frac{lb}{ft}$$

$$T_{uH} := T_u \cdot \cos\left[\left(\theta_u + \beta_u\right) \cdot \frac{\pi}{180}\right]$$

$$T_{uH} = 122.9 \quad \frac{lb}{ft}$$

Because $T_{uH} > T_{dH}$, anchor failure by sliding in the upslope direction will be considered.

The required soil weight (W) per foot width is determined by the following equation:

$$W_{min} := \frac{\left[-T_d \cdot \cos\left[\left(-\theta_d + \beta_d + \delta + \beta_a\right) \cdot \frac{\pi}{180}\right] + T_u \cdot \cos\left[\left(\theta_u + \beta_u - \delta - \beta_a\right) \cdot \frac{\pi}{180}\right]\right]}{\sin\left[\left(\delta + \beta_a\right) \cdot \frac{\pi}{180}\right]}$$

$$W_{min} = 201.4 \quad \frac{lb}{ft}$$

$$W_{factored} := W_{min} \cdot 1.5$$

$$W_{factored} = 302.1 \quad \frac{lb}{ft}$$

$$\gamma := 110 \quad \frac{lb}{ft^3}$$

$$A_{req} := \frac{W_{factored}}{\gamma}$$

$$A_{req} = 2.7 \quad \frac{ft^2}{ft}$$

At the toe of the side slope

$T_d := 92.5 \quad \frac{lb}{ft}$ downslope tension

$\theta_d := 14.9$ degrees angle of downslope tension

$T_u := 82.2 \quad \frac{lb}{ft}$ upslope tension

$\theta_u := 14.8$ degrees angle of upslope tension

$\beta_d := 0$ degrees at the toe of the side slope

$\beta_u := 18.435$

$\beta_a := 0$ degrees at the toe of the side slope

$\delta := 20$ degrees interface friction angle soil/geomembrane

Sliding direction:

Horizontal projections

$$T_{dH} := T_d \cdot \cos\left[\left(\theta_d - \beta_d\right) \cdot \frac{\pi}{180}\right]$$

$$T_{dH} = 89.4 \quad \frac{lb}{ft}$$

$$T_{uH} := T_u \cdot \cos\left[\left(\theta_u + \beta_u\right) \cdot \frac{\pi}{180}\right]$$

$$T_{uH} = 68.8 \quad \frac{lb}{ft}$$

Because $T_{dH} > T_{uH}$, anchor failure by sliding in the downslope direction will be considered.

The required soil weight (W) per foot width is determined by the following equation:

$$W_{min} := \frac{\left[T_d \cdot \cos\left[\left(\theta_d - \beta_d - \delta + \beta_a\right) \cdot \frac{\pi}{180}\right] - T_u \cdot \cos\left[\left(\theta_u + \beta_u + \delta - \beta_a\right) \cdot \frac{\pi}{180}\right]\right]}{\sin\left[\left(\delta - \beta_a\right) \cdot \frac{\pi}{180}\right]}$$

$$W_{min} = 125.5 \quad \frac{lb}{ft}$$

$$W_{factored} := W_{min} \cdot 1.5$$

$$W_{factored} = 188.3 \quad \frac{lb}{ft}$$

$$\gamma := 110 \quad \frac{lb}{ft^3}$$

$$A_{req} := \frac{W_{factored}}{\gamma}$$

$$A_{req} = 1.7 \quad \frac{ft^2}{ft}$$

Cells B and C

Upper Bench

$T_d := 89.1 \ \frac{lb}{ft}$ downslope tension

$\theta_d := 15.5$ degrees angle of downslope tension

$T_u := 102.8 \ \frac{lb}{ft}$ upslope tension

$\theta_u := 14.6$ degrees angle of upslope tension

$\beta_d := 18.435$ degrees slope inclination 3H:1V

$\beta_u := \beta_d$

$\beta_a := 0.573$ degrees bench inclination

$\delta := 20$ degrees interface friction angle soil/geomembrane

Sliding direction:

Horizontal projections

$$T_{dH} := T_d \cdot \cos\left[\left(\theta_d - \beta_d\right) \cdot \frac{\pi}{180}\right]$$

$$T_{dH} = 89 \ \frac{lb}{ft}$$

$$T_{uH} := T_u \cdot \cos\left[\left(\theta_u + \beta_u\right) \cdot \frac{\pi}{180}\right]$$

$$T_{uH} = 86.2 \ \frac{lb}{ft}$$

Because $T_{dH} > T_{uH}$, the anchor failure by sliding in the downslope direction will be considered.

The required soil weight (W) per foot width is determined by the following equation:

$$W_{min} := \frac{\left[T_d \cdot \cos\left[\left(-\theta_d + \beta_d - \delta + \beta_a\right) \cdot \frac{\pi}{180}\right] - T_u \cdot \cos\left[\left(\theta_u + \beta_u + \delta - \beta_a\right) \cdot \frac{\pi}{180}\right]\right]}{\sin\left[\left(\delta - \beta_a\right) \cdot \frac{\pi}{180}\right]}$$

$$W_{min} = 68.5 \quad \frac{lb}{ft}$$

$$W_{factored} := W_{min} \cdot 1.5$$

$$W_{factored} = 102.8 \quad \frac{lb}{ft}$$

$$\gamma := 110 \quad \frac{lb}{ft^3}$$

$$A_{req} := \frac{W_{factored}}{\gamma}$$

$$A_{req} = 0.9 \quad \frac{ft^2}{ft}$$

Middle Bench

$T_d := 82.2 \ \frac{lb}{ft}$ downslope tension

$\theta_d := 14.3$ degrees angle of downslope tension

$T_u := 89.1 \ \frac{lb}{ft}$ upslope tension

$\theta_u := 15.5$ degrees angle of upslope tension

$\beta_d := 18.435$ degrees slope inclination 3H:1V

$\beta_u := \beta_d$

$\beta_a := 0.573$ degrees bench inclination

$\delta := 20$ degrees interface friction angle soil/geomembrane

Sliding direction:

Horizontal projections

$$T_{dH} := T_d \cdot \cos\left[\left(\theta_d - \beta_d\right) \cdot \frac{\pi}{180}\right]$$

$$T_{dH} = 82 \quad \frac{lb}{ft}$$

$$T_{uH} := T_u \cdot \cos\left[\left(\theta_u + \beta_u\right) \cdot \frac{\pi}{180}\right]$$

$$T_{uH} = 73.9 \quad \frac{lb}{ft}$$

Because $T_{dH} > T_{uH}$, anchor failure by sliding in the downslope direction will be considered.

The required soil weight (W) per foot width is determined by the following equation:

$$W_{min} := \frac{\left[T_d \cdot \cos\left[\left(-\theta_d + \beta_d - \delta + \beta_a\right) \cdot \frac{\pi}{180}\right] - T_u \cdot \cos\left[\left(\theta_u + \beta_u + \delta - \beta_a\right) \cdot \frac{\pi}{180}\right]\right]}{\sin\left[\left(\delta - \beta_a\right) \cdot \frac{\pi}{180}\right]}$$

$$W_{min} = 78.5 \quad \frac{lb}{ft}$$

$$W_{factored} := W_{min} \cdot 1.5$$

$$W_{factored} = 117.8 \quad \frac{lb}{ft}$$

$$\gamma := 110 \quad \frac{lb}{ft^3}$$

$$A_{req} := \frac{W_{factored}}{\gamma}$$

$$A_{req} = 1.1 \quad \frac{ft^2}{ft}$$

At the toe of the side slope

$T_d := 92.5 \quad \frac{lb}{ft}$ downslope tension

$\theta_d := 15.5$ degrees angle of downslope tension

$T_u := 82.2 \quad \frac{lb}{ft}$ upslope tension

$\theta_u := 14.3$ degrees angle of upslope tension

$\beta_d := 0$ degrees at the toe of the side slope

$\beta_u := 18.435$

$\beta_a := 0$ degrees at the toe of the side slope

$\delta := 20$ degrees interface friction angle soil/geomembrane

Sliding direction:

Horizontal projections

$$T_{dH} := T_d \cdot \cos\left[\left(\theta_d - \beta_d\right) \cdot \frac{\pi}{180}\right]$$

$$T_{dH} = 89.1 \quad \frac{lb}{ft}$$

$$T_{uH} := T_u \cdot \cos\left[\left(\theta_u + \beta_u\right) \cdot \frac{\pi}{180}\right]$$

$$T_{uH} = 69.1 \quad \frac{lb}{ft}$$

Because $T_{dH} > T_{uH}$, the anchor failure by sliding in the downslope direction will be considered.

The required soil weight (W) per foot width is determined by the following equation:

$$W_{min} := \frac{\left[T_d \cdot \cos\left[\left(\theta_d - \beta_d - \delta + \beta_a\right) \cdot \frac{\pi}{180}\right] - T_u \cdot \cos\left[\left(\theta_u + \beta_u + \delta - \beta_a\right) \cdot \frac{\pi}{180}\right]\right]}{\sin\left[\left(\delta - \beta_a\right) \cdot \frac{\pi}{180}\right]}$$

$$W_{min} = 124.1 \quad \frac{lb}{ft}$$

$$W_{factored} := W_{min} \cdot 1.5$$

$$W_{factored} = 186.1 \quad \frac{lb}{ft}$$

$$\gamma := 110 \quad \frac{lb}{ft^3}$$

$$A_{req} := \frac{W_{factored}}{\gamma}$$

$$A_{req} = 1.7 \quad \frac{ft^2}{ft}$$