HL7 Version 2.5.1

Implementation Guide for Immunization Messaging

Release 1.0
05/01/2010

CS210109-A

Page Intentionally Blank

Publication History of Previous Versions:
Implementation Guide for Immunization Data Transactions using Version 2.3.1 of the Health Level Seven (HL7) Standard Protocol

Version	Date
Version 2.0	June 1999
Version 2.1	September 2003
Version 2.2	June 2006

Revision history

Revision	Date	Author
Release 1.0	5/1/2010	Rob Savage

For information about HL7, contact:

Health Level Seven
3300 Washtenaw Avenue, Suite 227
Ann Arbor, MI 48104-4250
Phone: (734) 677-7777
Fax: (734) 677-6622
E-Mail: hq@hl7.org
Website: http://www.hl7.org

For information about the **American Immunization Registry Association**, visit http://www.immregistries.org

For information about this *Guide*, contact:

Rob Savage
rbsavage@cdc.gov

Warren Williams
wxw4@cdc.gov

Immunization Information Systems Support Branch, Immunization Services Division, National Center for Immunization and Respiratory Diseases, Centers for Disease Control and Prevention
Phone: (404) 639-8245
Fax: (404) 639-8171
Website:
http://www.cdc.gov/vaccines/programs/iis/default.htm

Table of Contents

1. INTRODUCTION 1

INTENDED AUDIENCE 1
SCOPE 2
ORGANIZATION AND FLOW 3
INTRODUCTION TO DIAGRAMS AND MODELS 5
ACTOR AND USE CASE DIAGRAMS AND TABLES 5
SEQUENCE DIAGRAMS 6
ACTIVITY DIAGRAMS 7

2. ACTORS, GOALS, AND MESSAGING TRANSACTIONS 9

ACTORS AND GOALS 9
HIGH-LEVEL VIEW OF USE CASES 12
USE CASE DESCRIPTIONS 14
USE CASE 1—SEND IMMUNIZATION HISTORY 14
USE CASE 2—RECEIVE IMMUNIZATION HISTORY 15
USE CASE 3—REQUEST IMMUNIZATION HISTORY 15
USE CASE 4—RETURN IMMUNIZATION HISTORY 17
USE CASE 4A—FIND CANDIDATE CLIENTS 17
USE CASE 5--ACCEPT REQUESTED HISTORY: 20
USE CASE 6—SEND DEMOGRAPHIC DATA 21
USE CASE 7—ACCEPT DEMOGRAPHIC DATA 21
USE CASE 8--ACKNOWLEDGE RECEIPT 22
USE CASE 9—REPORT ERROR 23
MESSAGING IN THE CONTEXT OF THE BUSINESS PROCESS 23

3. HL7 MESSAGING INFRASTRUCTURE 26

HL7 DEFINITIONS 26
BASIC MESSAGE CONSTRUCTION RULES 28
ENCODING RULES FOR SENDING 28
ENCODING RULES FOR RECEIVING 29
IMPLICATIONS OF THE ENCODING RULES 29
DETERMINING USAGE OF SEGMENTS, FIELDS AND COMPONENTS 30
MESSAGE ATTRIBUTES COMMON TO ALL MESSAGES 35
SEGMENT ATTRIBUTES COMMON TO ALL SEGMENTS 36

4. HL7 DATA TYPES 38

DATA TYPES FOR IIS USE 38
CE -- CODED ELEMENT (MOST USES) 39
CE -- CODED ELEMENT (TEXT ONLY IN RXA-9) 41
CQ -- COMPOSITE QUANTITY WITH UNITS 41
CWE -- CODED WITH EXCEPTIONS 42
CX -- EXTENDED COMPOSITE ID WITH CHECK DIGIT 44
DT -- DATE 45
DTM -- DATE/TIME 46
EI -- ENTITY IDENTIFIER 46

ERL -- ERROR LOCATION 47
FC -- FINANCIAL CLASS 49
FN -- FAMILY NAME 49
HD -- HIERARCHIC DESIGNATOR 50
ID -- CODED VALUES FOR HL7 TABLES 51
IS -- CODED VALUES FOR USER DEFINED TABLES 52
LA2 -- LOCATION WITH ADDRESS VARIATION 2 52
MSG -- MESSAGE TYPE 53
NM -- NUMERIC 54
PT -- PROCESSING TYPE 54
SAD -- STREET ADDRESS 55
SI -- SEQUENCE ID 55
ST – STRING 56
TS -- TIME STAMP 56
VID -- VERSION ID 56
XAD -- EXTENDED ADDRESS 57
XCN - EXTENDED COMPOSITE ID NUMBER AND NAME FOR PERSONS 59
EXTENDED PERSON NAME (XPN) 61
XTN - EXTENDED TELECOMMUNICATION NUMBER 63

5. SEGMENTS AND MESSAGE DETAILS 65

BHS—BATCH HEADER SEGMENT 71
BHS FIELD DEFINITIONS 71
BTS—BATCH TRAILER SEGMENT 72
BTS FIELD DEFINITIONS 72
ERR—ERROR SEGMENT 72
ERR FIELD DEFINITIONS: 74
EVN - EVENT TYPE SEGMENT 75
EVN FIELD DEFINITIONS 75
FHS—FILE HEADER SEGMENT 76
FHS FIELD DEFINITIONS 76
FTS—FILE TRAILER SEGMENT 77
IN1—INSURANCE SEGMENT (IN2, IN3) 77
MSA—MESSAGE ACKNOWLEDGEMENT SEGMENT 78
MSA FIELD DEFINITIONS 78
MSH—MESSAGE HEADER SEGMENT 79
MSH FIELD DEFINITIONS 80
NK1—NEXT OF KIN SEGMENT 85
NK1 FIELD DEFINITIONS 88
NTE—NOTE SEGMENT 89
NTE FIELD DEFINITIONS 89
OBX—OBSERVATION RESULT SEGMENT 89
OBX FIELD DEFINITIONS 92
ORC—ORDER REQUEST SEGMENT 94
ORC FIELD DEFINITIONS 97
PD1—PATIENT DEMOGRAPHIC SEGMENT 99
PD1 FIELD DEFINITIONS 101
PID—PATIENT IDENTIFIER SEGMENT 103
PID FIELD DEFINITIONS 107
PV1—PATIENT VISIT SEGMENT 110

PV1 FIELD DEFINITIONS 113
QAK—QUERY ACKNOWLEDGEMENT SEGMENT 114
QAK FIELD DEFINITIONS 114
QPD – QUERY PARAMETER DEFINITION 115
QPD FIELD DEFINITIONS 115
RCP – RESPONSE CONTROL PARAMETER SEGMENT 116
RCP FIELD DEFINITIONS 117
RXA-- PHARMACY/TREATMENT ADMINISTRATION SEGMENT 118
RXA FIELD DEFINITIONS 121
RXR-- PHARMACY/TREATMENT ROUTE SEGMENT 125
RXR FIELD DEFINITIONS 125

6. MESSAGES FOR TRANSMITTING IMMUNIZATION INFORMATION 127

INTRODUCTION 127
SEND IMMUNIZATION HISTORY--VXU 127
REQUESTING INFORMATION (IMMUNIZATION HISTORY) – QBP 129
RESPOND TO REQUEST FOR INFORMATION– RSP 130
REQUESTING AN IMMUNIZATION HISTORY FROM ANOTHER SYSTEM VXQ 131
THE USE OF VXQ IS NOT SUPPORTED FOR 2.5.1 IMMUNIZATION MESSAGING. 131
ACKNOWLEDGING A MESSAGE--ACK 131
SENDING DEMOGRAPHIC INFORMATION – VXU OR ADT 132
SENDING MESSAGES IN A BATCH 133

7. QUERY AND RESPONSE PROFILE (QBP/RSP) 135

REQUEST IMMUNIZATION HISTORY QUERY PROFILE –Z34^CDCPHINVS 135
RETURN A LIST OF CANDIDATES PROFILE -- Z31^CDCPHINVS 147
INTRODUCTION: 147
USE CASE: 148
STATIC DEFINITION 149
SEGMENT LEVEL PROFILE 151
FIELD LEVEL PROFILE 151
DYNAMIC DEFINITION 152
ACKNOWLEDGEMENT RESPONSIBILITIES 152
RETURN AN IMMUNIZATION HISTORY – Z32^CDCPHINVS 153
INTRODUCTION: 153
USE CASE: 153
STATIC DEFINITION 155
SEGMENT LEVEL PROFILE 156
FIELD LEVEL PROFILE 157
DYNAMIC DEFINITION 157

APPENDIX A: CODE TABLES 1

APPENDIX B – GUIDANCE ON USAGE AND EXAMPLE MESSAGES 1

IMMUNIZATION HISTORY DEFINITION 1
SEND IMMUNIZATION HISTORY (VXU) 2
BUSINESS PROCESS 2
SUPPORTED MESSAGE SEGMENTS 5

EXAMPLE VXU # 1-BASIC MESSAGE: 6
EXAMPLE VXU #2 - INDICATE VACCINE FUNDING SOURCE AND CLIENT ELIGIBILITY STATUS: 7
ELIGIBILITY STATUS: 7
FUNDING SOURCE: 8
EXAMPLE VXU #3 - INCLUDE IMMUNIZATION HISTORY EVALUATION AND FORECAST IN VXU 10
INDICATING THE SCHEDULE THAT WAS USED: 14
INDICATING VACCINE GROUP ASSOCIATED: 15
REPORTING THE ORDINAL POSITION IN A SERIES: 16
REPORTING THE NUMBER OF DOSES IN A SERIES: 16
REPORTING NEXT DOSE RECOMMENDATION DATES: 16
REPORTING RECOMMENDATION REASONS: 17
USING THE NTE SEGMENT ASSOCIATED WITH AN OBX TO PROVIDE MORE INFORMATION: 18
EXAMPLE VXU #4 - SEND CLIENT SPECIFIC CONDITIONS 18
EVIDENCE OF IMMUNITY: 18
CONTRAINDICATIONS TO IMMUNIZATION: 19
FACTORS WHICH INDICATE THE NEED FOR AN IMMUNIZATION OR A CHANGED RECOMMENDATION: 19
EXAMPLE VXU #5 – SEND IMMUNIZATIONS ASSOCIATED WITH REACTIONS (ADVERSE EVENTS) 19
EXAMPLE VXU #6 –DELETE AN IMMUNIZATION RECORD 20
VXU EXAMPLE #7--SEND INFORMATION ABOUT VACCINE INFORMATION STATEMENT (VIS) 21
VXU EXAMPLE #8—SEND INFORMATION ABOUT IMMUNIZATION REFUSAL 22
VXU EXAMPLE #9—SEND TWO LOT NUMBERS IN RXA 22
VXU EXAMPLE #10—RECORDING BIRTH INFORMATION 23
VXU EXAMPLE #11—RECORDING AN INCOMPLETELY ADMINISTERED DOSE OR A NON-POTENT DOSE. 23
SEND ACKNOWLEDGEMENT ACK IN RESPONSE TO VXU 24
SEND ACKNOWLEDGEMENT OF SUCCESS IN ACK 24
SEND ERROR IN ACK 24
SEND REQUEST FOR VACCINE HISTORY (QBP/RSP) 26
PROCESS FOR REQUESTING IMMUNIZATION HISTORY 26
DESCRIPTION OF THE VXQ/VXX/VXR PROCESS FROM VERSION 2.3.1 26
USING QBP QUERY TO REPLICATE VXQ/VXX/VXR 28
RETURNING A LIST OF CANDIDATE CLIENTS IN RESPONSE TO QBP^Q11 QUERY 31
RETURNING AN IMMUNIZATION HISTORY IN RESPONSE TO A REQUEST FOR IMMUNIZATION HISTORY QUERY 32
ACKNOWLEDGING A QUERY THAT FINDS NO CANDIDATE CLIENTS 32
USING A TWO-STEP PROCESS TO REQUEST AN IMMUNIZATION HISTORY 33
RETURNING A LIST OF CANDIDATE CLIENTS IN RESPONSE TO PDQ QUERY 37
RECEIVING SYSTEM DETERMINES THAT MESSAGE HAS ERRORS 38
MALFORMED MESSAGE 38
NO MATCH IS FOUND 39

Table of Figures

Revision history....3
Figure 1-1 Simple Use Case Diagram 6
Figure 1-2-Simple Sequence Diagram....7
Figure 1-3 Simple Activity Diagram....8
Table 2-1 Actors and Goals for Messaging....10
Figure 2-1 Use Case Diagram 13
Figure 2-2 Finding a Client....14
Figure 2-3-Use Cases 1 and 2: Send and Receive Immunization History 15
Figure 2-4-Use Cases 3, 4 and 5: Request Immunization History, Respond to Request and Accept Requested History 17
Figure 2-5--Using PDQ to Resolve Identity Prior to Request for Immunization History 18
Figure 2-6--Implicit Identity Resolution in Response to a Request for Immunization History When One High-confidence Match Is Found....19
Figure 2-7--Implicit Identity Resolution in Response to a Request for Immunization History When Lower Confidence Candidates Are Found 20
Figure 2-8--Send Demographic Data Via VXU or ADT 22
Figure 2-9--VXU Process Model 25
Table 3-1 Outcome of Encoding Rule Breaches....29
Table 3-1--Usage Code Interpretations for Fields, Components and Sub-components 31
Table 3-2--Usage Code Interpretation for Segments 34
Table 3-3--Message Attributes....35
Table 3-4--Segment Attributes....36
Table 4-1-- Data Types 39
Table 4-2 Coded Element (CE)....40
Table 4-3 Coded Element (CE) for Text Only RXA-9....41
Table 4-4 Composite Quantity with Units (CQ) 42
Table 4-5 Coded with Exceptions (CWE)....43
Table 4-6 Extended Composite ID with Check Digit(CX) 44
Table 4-7 Date (DT) 45
Table 4-8 Date/Time (DTM) 46
Table 4-9 Entity Identifier (EI) 46
Table 4-10 Error Location (ERL)....47
Table 4-11 Financial Class (FC) 49
Table 4-12 Family Name....50
Table 4-13 Hierachical Designator (HD) 50
Table 4-14 Coded Values for User Defined Tables (IS)....52
Table 4-15 Location with Address Variation 2....52
Table 4-16 Message Type (MSG)....53
Table 4-17 Numeric (NM) 54
Table 4-18 Processing Type (PT) 54
Table 4-19 Street Address (SAD) 55
Table 4-20 Sequence Id (SI)....55

Table 4-21 Time Stamp (TS) 56
Table 4-22 Version ID (VID) 56
Table 4-23 Extended Address (XAD) 57
Table 4-24 Extended Composite ID Number and Name (XCN) 59
Table 4-25 Extended Person Name (XPN) 61
Table 4-26 XTN Extended Telecommunication Number (XTN) 63
Table 5-1 Message Segments 65
Table 5-2 Batch Header Segment (BHS) 71
Table 5-3 Batch Trailer Segment (BTS) 72
Table 5-4 Error Segment (ERR) 73
Table 5-5 Event Segment (EVN) 75
Table 5-6 File Header Segment (FHS) 76
Table 5-7 File Trailer Segment (FTS) 77
Table 5-8 Message Acknowledgement Segment (MSA) 78
Table 5-9 Message Header Segment (MSH) 79
Table 5-10 Message Types 82
Table 5-11-Next of Kin Segment (NK1) 86
Table 5-12 Note Segment (NTE) 89
Table 5-13 Observation Segment (OBX) 90
Table 5-14 Common Order Segment (ORC) 95
Table 5-15-Patient Demographic Segment (PD1) 100
Table 5-16-Patient Identifier Segment (PID) 104
Table 5-17-Patient Visit (PV1) 111
Table 5-18-Query Acknowledgement Segment 114
Table 5-19-Query Parameter Definition (QPD) 115
Table 5-20-Response Control Parameter 117
Table 5-21 Pharmacy/Treatment Administration (RXA) 119
Table 5-22 Pharmacy/Treatment Route (RXR) 125
Table 6-1-Supported Messages 127
Table 6-2--VXU Segment Usage 127
Figure 6-1-VXU Domain Diagram 129
Table 6-3 QBP/RSP – Query By Parameter/Segment Pattern Response 130
Table 6-4-Segment Pattern Response (RSP) 131
Table 6-5 Message Acknowledgement Segment (ACK) 131
Table 6-6-ADT A04 Message 133
Table 7-1 Request Immunization History Query Profile 136
Table 7-2-Response Grammar to Different Outcomes 137
Table 7-3 Response Grammar RSP^K11 139
Table 7-4 MSH Specification for Request Immunization History Query 141
Table 7-5 QPD Input Parameter Specification 142
Table 7-6 QPD Input Parameter Field Description and Commentary 143
Table 7-7 RCP Response Control Parameter Field Description and Commentary 146
Table 7-8 Query Response Possibilities 147
Figure 7-1--Return Candidate List 148
Table 7-9 Response Grammar RSP^K11 149

Figure 7-2 Return Candidate List (RSP^K11) 152
Figure 7-3 Return Immunization History Use Case.....154
Figure 7-4 Return Immunization History Response Grammar 155
Figure 7-5 Return Immunization History Sequence Diagram.....157
Table 10-Immunization History Definition 1
Figure 6-VXU Business Process.....3
Figure 7-Segment Usage.....6
Figure 8--VXQ/VXX/VXR processes.....27
Figure 9--Request Immunization History.....29

1. Introduction

Immunization Information Systems (IIS) are centralized population based repositories of immunization related information. They receive and share data on individual clients/patients with a number of other systems, including Electronic Health Record systems (EHR-S). Health Level Seven (HL7) is a nationally recognized standard for electronic data exchange between systems housing health care data. The HL7 standard is a key factor that supports this two-way exchange of information because it defines a syntax or grammar for formulating the messages that carry this information. It further describes a standard vocabulary that is used in these messages. It does not depend on specific software, that is, it is platform independent.

This document represents the collaborative effort of the American Immunization Registry Association (AIRA) and the Centers for Disease Control and Prevention (CDC) to improve inter-system communication of immunization records. This implementation guide will replace the existing *Implementation Guide for Immunization Data Transaction Using Version 2.3.1 of the HL7 Standard Protocol*, and will be based on HL7 Version 2.5.1, as published by the HL7 organization (www.hl7.org). The existing 2.3.1 Guide has a number of successful implementations that exchange messages with other IIS and EHR-S. The experience of these implementations has identified a number of areas of the existing Guide that would benefit from an update of the Guide.

As HL7 has developed and published new versions of the standard, it has sought to maximize the ability of implementations, based on newer versions to be able to accept messages from earlier versions. Based on this, we anticipate that faithful implementations of this Guide will be able to accept most immunization messages based on the 2.3.1 Guide. Note that variations in current 2.3.1 interfaces increase the risk that faithful 2.5.1 implementations will encounter problems with 2.3.1 messages. The benefits from moving to 2.5.1 should encourage migration to this standard.

Implementations that are supporting Version 2.3.1 messages should continue to follow the specifications of 2.3.1 messages described in the Implementation Guide Version 2.2, June 2006.

Intended Audience

This Guide has two audiences. The first is the system managers that must understand this process at a high level. The second is the technical group from IIS and EHR-S that must implement these guidelines. For them we strive for an unambiguous specification for creating and interpreting messages. Our goal is for this Guide to be a bridge between the two.

It is important to note that HL7 specifies the interface between 2 systems. It does not specify how any given system is implemented to accomplish the goals of messaging.

Scope

This Guide is intended to facilitate the exchange of immunization records between different systems[1]. This includes

- sending and receiving immunization histories for individuals
- sending and receiving demographic information about the individuals
- requesting immunization histories for individuals
- responding to requests for immunization histories by returning immunization histories
- acknowledging receipt of immunization histories and requests for immunization histories
- reporting errors in the messaging process
- sending observations about an immunization event (this may include funding, reactions, forecasts and evaluations).

The Guide is not intended to specify other issues such as

- business rules, which are not implicit in HL7, applied when creating a message
- business rules, which are not implicit in HL7, applied when processing a received message
- the standard transport layer
- search process used when responding to a query
- business rules used to deduplicate clients or events
- management of vaccine inventory
- maintenance of Master Person Index.[2]

Local implementations are responsible for the important issues described above. One way to insure success is to publish a local profile or implementation guide that outlines the local business rules and processes. These guides may further constrain this Guide, but may not contradict it. This Guide will identify some of the key issues that should be addressed in local profiles.

The Guide is meant to support and integrate with standards harmonization efforts. These efforts include the Health Information Standards Panel (HITSP), HITSP has selected a number of items which support interoperability between health systems. Among these is selection of preferred vocabulary. This Guide will adopt these standard vocabularies as they apply. Another effort, which promotes standards harmonization, is

[1] The exchange partners could be IIS, EHR-S. or other health data systems.
[2] Note that requesting an immunization history may require interaction with an MPI or other identity source. Those using these services should consult with profiles or implementation guides that support this. Integrating the Healthcare Enterprise (IHE) has profiles that support MPI maintenance and identity resolution.

an organization called Integrating the Healthcare Enterprise (IHE)[3]. They produce profiles, which define how to accomplish various goals with common components.

This Guide makes the following assumptions:

- Infrastructure is in place to allow accurate and secure information exchange between information systems. [4]
- Providers access immunization information through either an EHR-S or immunization information system (IIS).
- Privacy and security has been implemented at an appropriate level.
- Legal and governance issues regarding data access authorizations, data ownership and data use are outside the scope of this document.
- The immunization record and demographic record for each patient contains sufficient information for the sending system to construct the immunization and demographic message properly.
- External business rules are assumed to be documented locally.

It is important to be able to accept complete immunization histories from different sources and have a method for integrating them. This implies that a system should not assume that any record sent is "new". If the system makes this assumption and receives a complete history that has overlapping immunization records, there is a risk for duplicate records.

There is "best practice" guidance on handling this from the American Immunization Registry Association (AIRA) in the Modeling Immunization Registry Operations Workgroup (MIROW) documents available the AIRA website. (immregistries.org)

Organization and Flow

The first two chapters are meant to lay out what can be done and why. The chapters that follow them describe and specify how. They start at the most granular level and proceed to the message level. Several appendices support implementers with value sets and examples of use.

Boxed notes are used to call attention to areas where there are changes from the version 2.3.1 Implementation Guide or areas where readers should pay special attention.

[3] IHE is an industry-supported group, which creates implementable specifications, based on existing standards, to support accomplishment of selected use cases.
[4] This infrastructure is not specified in this document, but is a critical element to successful messaging. Trading partners must select a methodology and should specify how it is used.

Chapter 1-Introduction
This chapter describes the scope of the Guide and gives supporting background. It includes a description of the diagrams that will be used to illustrate business processes and transactions.

Chapter 2-Actors, Goals and Messaging Transactions
Chapter 2 describes the business motivations that this Guide will support. It will describe the entities (actors) that will rely on the messages. It will lay out the transactions that will support the goals of these actors (use cases). Finally, it will describe the broader context that this messaging occurs in. There are supporting business processes outside of the actual messaging that are keys to success.

Chapter 3-Messaging infrastructure
Chapter 3 focuses on the underlying rules and concepts that are the basis for HL7 messaging. It will illustrate the components of messages, the grammatical rules for specifying the components and subcomponents.

Chapter 4_Data-type Definitions
This chapter will describe and specify all data types anticipated for use by the messages supported by this Guide. Where there are subcomponents to a data type, it will specify any rules related to use. The values used in messages are specified in appendix A. Data types are the building block for segments, described in the next chapter.

Chapter 5-Message Segments
Chapter 5 gives specifications for message segments. Segments are units of the message that carry specific types of information. For instance PID carries patient identifying information. The segments included in this chapter are those that are needed by the messages specified in Chapter 6.

Chapter 6- Message Details for Immunization
Chapter 6 specifies how to use the building blocks of data types and segments to meet the business needs to convey immunization records. It will include specification for requesting an immunization history and acknowledging message receipt or errors.

Chapter 7- Query Profile for Requesting an Immunization History.
HL7 has a template for specifying a query. This chapter uses that template to give the specifications for a query requesting an Immunization History. It is built on the previous 4 chapters. Two child profiles, which support response to the query, are also found in this chapter.

Appendix A-Code Tables
This appendix lists expected values for all coded data elements used in this Guide.

Appendix B- Message examples
This appendix will show detailed examples of how to implement the messages specified in the body of the Implementation Guide.

Introduction to Diagrams and Models

This document makes use of models or diagrams to illustrate the transactions and their components. These include Use Case model, Sequence Diagram and Activity Diagram. These are based on the Unified Modeling Language (UML). The illustrations below are examples only. Detailed models will be found in the appropriate sections later in the document.

Actor and Use Case Diagrams and Tables

Actors are information systems or components of information systems that produce, manage, or act on categories of information required by operational activities in the enterprise. In our context, ***use cases*** are tasks or goals that actors use to communicate the required information through standards-based messages. The diagrams and tables of actors and transactions in subsequent sections indicate which transactions each actor performs.

The use cases shown on the diagrams are identified by their name. Supporting text will define the goal of a use case. The actors associated with each use case will be included and show their relationship. The diagram below shows 2 actors that use the Send Immunization History Use Case. In this use case we see that both IIS and EHR-S use the *Send Immunization History* use case. It does not imply that the IIS sends an immunization history to an EHR-S.

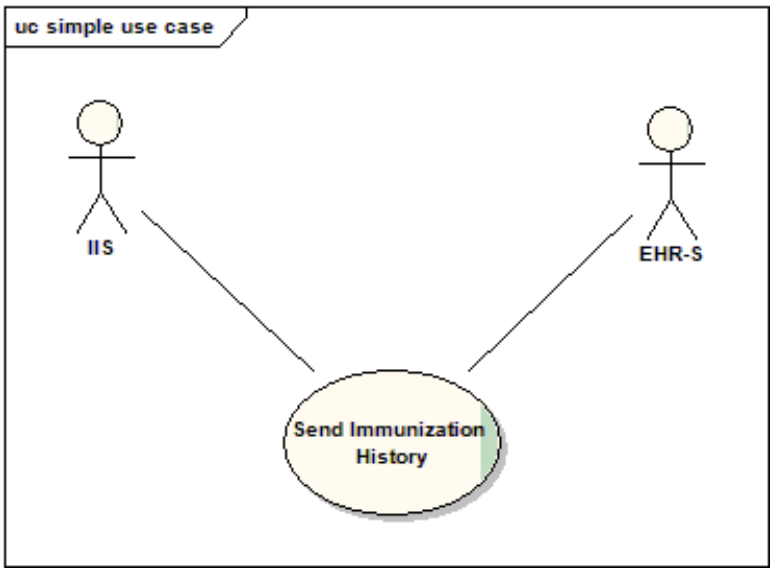

Figure 1-1 Simple Use Case Diagram

Sequence Diagrams

The descriptions of the use cases that follow include sequence diagrams that illustrate how the use case is accomplished as a sequence of transactions between relevant actors.

These diagrams are intended to provide an overview so the transactions can be seen in the context of the participating institution's workflows. These diagrams are not intended to present the only possible scenario, just those required to accomplish the goals of communicating between information systems.

In some cases the sequence of transactions may be flexible. Where this is the case there will generally be a note pointing out the possibility of variations. Transactions are shown as arrows oriented according to the flow of the primary information handled by the transaction. In the diagram below we see that one system (it could be IIS or EHR-S) sends an immunization record to another system. The message sent is a VXU (Unsolicited Update of Immunization Record). The receiver processes the message and sends an acknowledgment of the receipt. The processing is not part of the messaging and may vary from application to application. The acknowledgement could be as simple as "I got it, all is OK" or "The message has errors and I can't accept it"

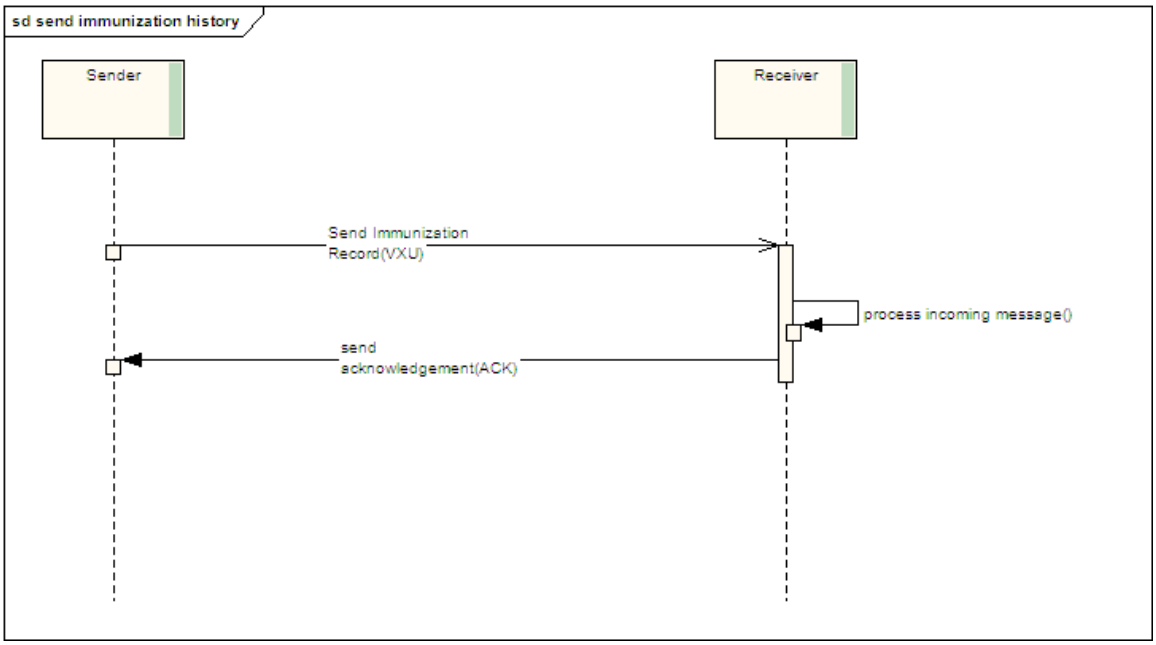

Figure 1-2-Simple Sequence Diagram

Activity Diagrams

Activity diagrams are another way of showing what is happening within systems and between systems. They are most useful for showing the decision logic used. The diagram includes “swim-lanes”, which separate the tasks of cooperating systems. The purpose of the following diagram is to illustrate the components of an activity diagram, not to design a system.

In this case, the sending system sends a VXU. The receiving system parses the message and decides what to do with it. We assume that parsing was successful to simplify this diagram. There are a number of decisions that are made and each leads to an action or actions. The diamonds represent decision points. In the first decision point, the system branches follows different paths, depending on the results of the client search. If no matches are found, it follows its local process for integrating a new record into the data base. If a lower confidence match is found (for instance, more than one client matches the incoming record) it follows local business rules for the situation. If a high confidence match is found, it follows local business rules for merging the incoming data into an existing client record. All actions then move to acknowledge the results of the activity.

The actual activity of a real system may be very different from this.

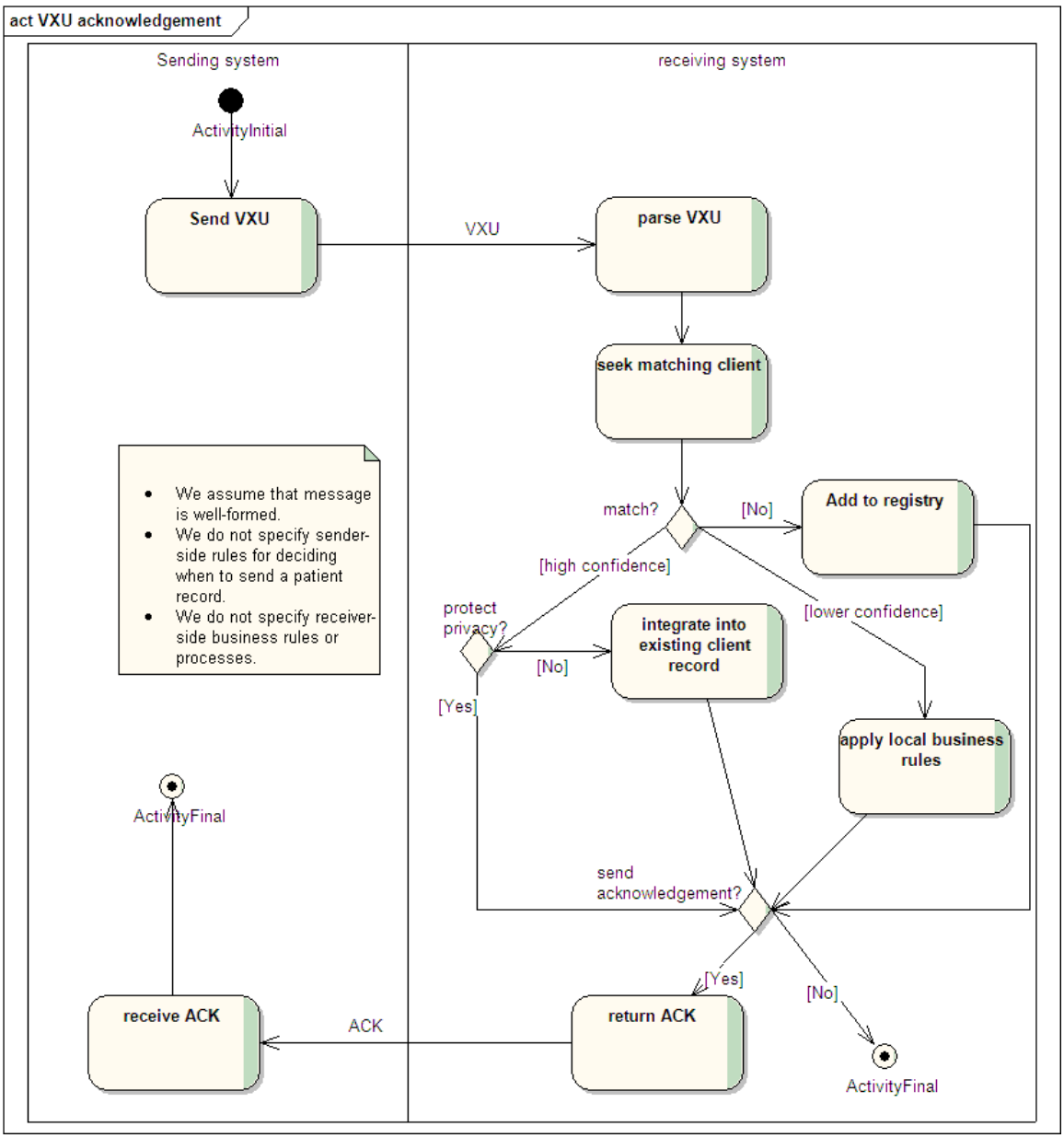

Figure 1-3 Simple Activity Diagram

Note that the focus of this guide is on the format and grammar of the messages between systems. The activities shown within a system are intended to put the message in context and to highlight the local responsibilities for successful messaging.

2. Actors, Goals, and Messaging Transactions

This chapter will describe the actors (entities) that may be involved in sending or receiving immunization-related messages. It will list and describe the use cases (goals) that they have that can be met by the messages. It will illustrate the messaging interface in context. Finally, it will associate specific HL7 messages with these goals.

Note that there are a number of supporting processes that are not included within the messaging specifications. They are vital to success, but do not belong in this Implementation Guide, but rather in local business rules documentation.

Actors and Goals

There are a number of primary actors involved in data exchange. These include

- Immunization Information System (IIS)
- Electronic Health Record Systems (EHR-S) and other systems[5]
- An actor with a supporting role may be a Master Person Index (MPI)[6].

We will focus on the first 2 actors but will illustrate how the MPI actor may be integrated. These actors can be suppliers of information/data and consumers/requesters of data. We will consider the initiator of a messaging conversation the sender and the target of this first message the receiver. Obviously, a sender may receive messages. For instance, a sender initiates a request for an immunization history for a client. The receiver responds with a message that is received by the initiating sender. For clarity, the initiator will keep the label of sender.

Note that we do not assume that the sender or receiver is a specific data source (IIS or EHR). One IIS may query another IIS or an EHR-S. Similarly, an EHR-S may send an immunization history to another EHR-S.

Other actors have an interest in the functions of an IIS and messaging. These include:

- Clients/patients
- Users
- Policy makers
- Researchers
- Public Health agencies

[5] The diagrams often show an IIS and an EHRs/other system. The other system may be an IIS.
[6] A Master Person Index is used by some health data systems to cross-reference a person's identifiers across these systems. If system A needs the person's id from system B, then it may retrieve it from the MPI. The PIX query asks for one system's personal identifier, based on another system's identifier.

- Clinicians
- Billing systems

These actors will not be directly addressed in this Guide. They interact with the primary actors to accomplish their needs.

Table 2-1 Actors and Goals for Messaging

Actor	Responsibility	Messaging Goals
Immunization Information System (IIS)	Provide access to a complete, consolidated immunization record for each person in its catchment area Supply individual immunization records to authorized users and systems Support aggregate reporting and analysis Evaluate immunization history and make recommendations for next doses Store medical conditions that affect what vaccines are recommended	Receive immunization histories and updates Receive demographic updates Receive requests for individual records Receive observations about a person Send observations about a person Send immunization records to other systems Send demographic data Request immunization record Request person id Acknowledge receipt of message Report processing errors from receipt of message
Electronic Health Record system (EHR-S)	House a person's electronic health record Make a person's record available to authorized persons	Receive immunization histories and updates Receive demographic updates Receive requests for individual

Actor	Responsibility	Messaging Goals
	Provide decision support for clinical decisions.	records Send immunization records to IIS Send demographic data Receive observations about a person Send observations about a person Request Immunization record Request person id Acknowledge receipt of message Report processing errors from receipt of message Request evaluation on an immunization history and recommendations for next dose on a given Schedule, such as ACIP
Master Person Index or other identity broker.	Maintain a list of patients and identifiers for a set of persons Supply identifiers for other system's use Be a central demographic supplier for participating systems Provide cross-reference for identifiers for participating systems.	Send id for an individual for use in a record request or record update Receive request for person id. Return complete demographic data for an individual from central demographic store

The table lists a number of messaging needs that relate to IIS and their trading partners. These are all candidates for HL7 messaging. Some are not currently implemented, but

give us the landscape that should be considered. Note that the messaging for maintaining of an MPI is out of scope for this Implementation Guide.

Another way to organize these tasks or goals is to decompose the goals of the entities (actors) into the various roles they may play. These roles include:

- Immunization history supplier
- Immunization history consumer
- Demographic information supplier
- Demographic information consumer
- Identity resolution broker

Each of the actors above may have the capacity and interest to support some constellation of these roles. This approach is useful for system design and implementation and encourages a services approach to development. Since the goal of this chapter is to provide a non-technical view to help system managers understand how messaging can meet their needs, we will focus on the business entities and their goals.

High-Level View of Use Cases

We can map these actors and messaging goals to use cases. The following diagram maps the messaging goals of the various players to use cases. These use cases will be defined below. Note that some of these use cases are logically related. For instance, *Request Immunization History* is paired with *Return Immunization History*. *Send Immunization History* needs the receiver to *Receive Immunization History*. These use cases are not intended to be the basis of a software design process.

Several paths may accomplish the request for immunization history. Systems will return an immunization history when they are confident that the person requested has been identified. One path separates identity resolution from the request for immunization history. Another includes implicit identity resolution. For details, see use case 3, 4A and 4 below.

Figure 2-1 Use Case Diagram

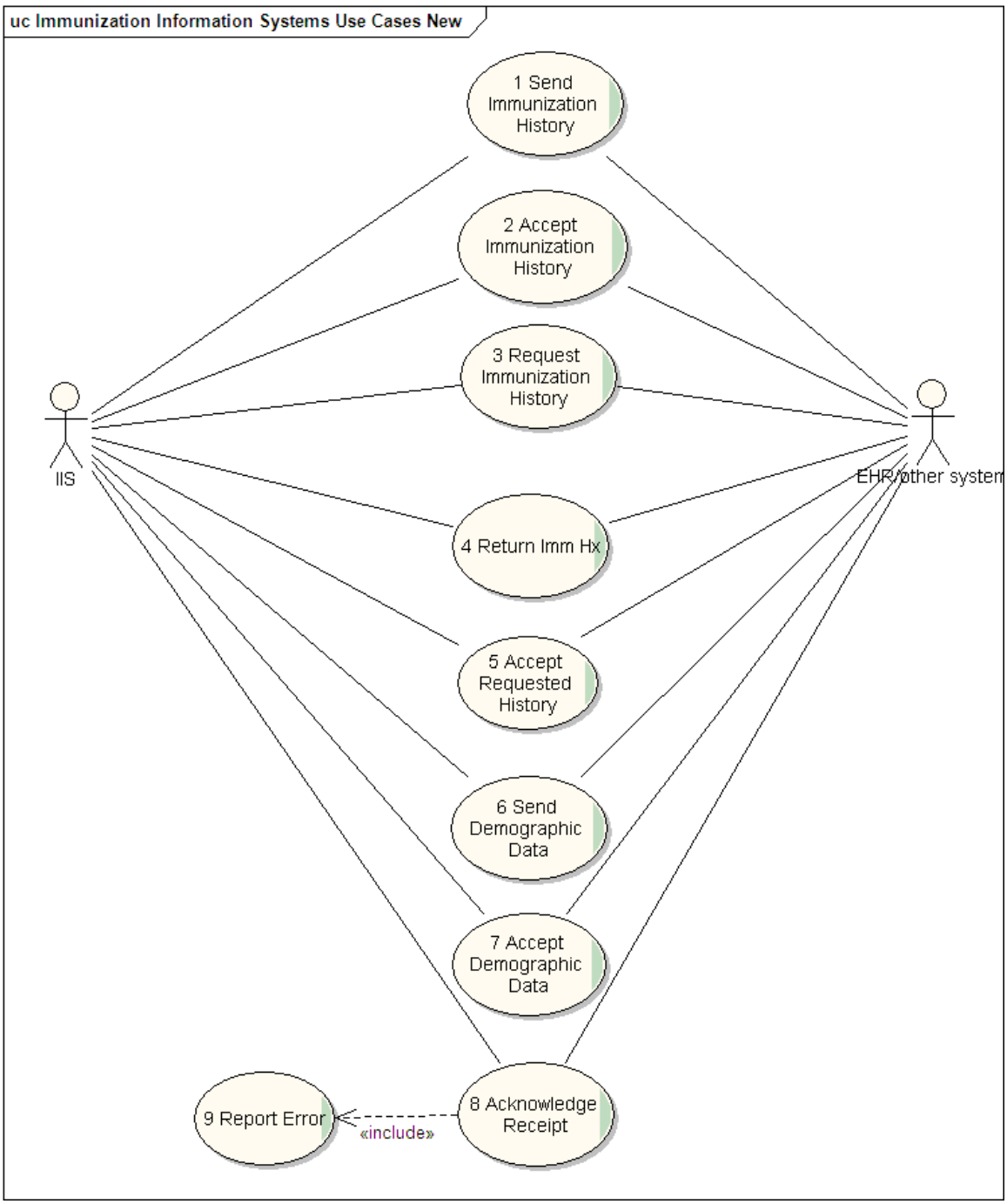

The following diagram illustrates a more detailed view of the request immunization history and return immunization history. It breaks the *Find Candidate Clients* use case out. Note that a system may request identity resolution (find client) prior to requesting an immunization history. Alternatively, a system may request an immunization history. This can trigger an implicit request to find a client.

Figure 2-2 Finding a Client

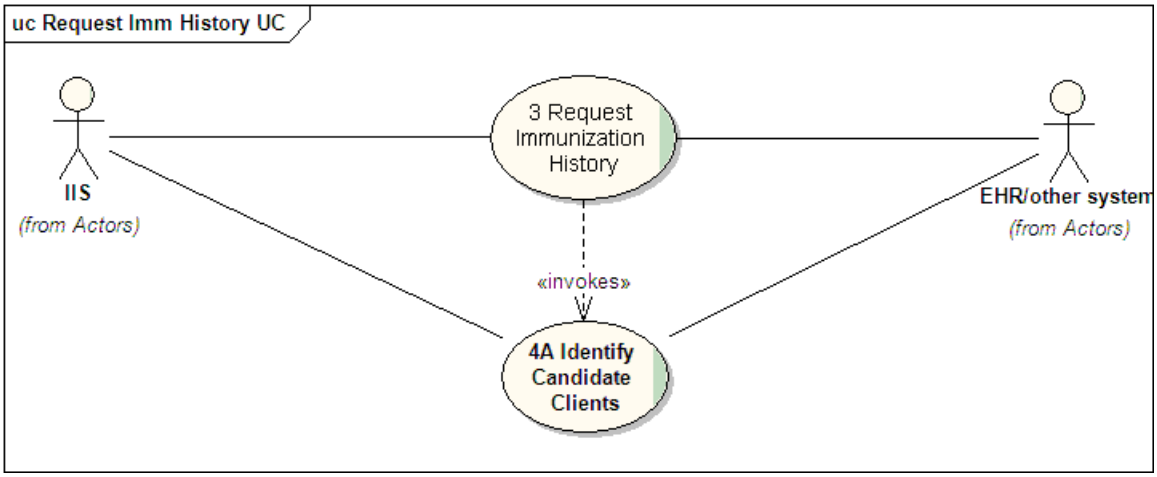

The following lists the HL7 Messages shown below in the Use Cases:

ACK-Acknowledgement message
ADT-Admit, Discharge and Transfer message
QBP-Query by parameter
RSP-Respond to QBP
VXU-Unsolicited vaccine history

The following are profiled queries supported by IHE for identity resolution:

PDQ-A specific type of QBP that facilitates identify resolution based on demographic information
PIX- A specific type of QBP that accomplishes id cross reference

Use Case Descriptions

Use Case 1—Send Immunization History

Goal: To send an immunization history for an individual client from one system to another. In addition to EHR-S and IIS, other systems such as vital records systems or billing systems could use this message to send immunization histories.

HL7 version 2.5.1 Message Type: VXU

Precondition: A user or other actor requests that the sending system send an immunization history.

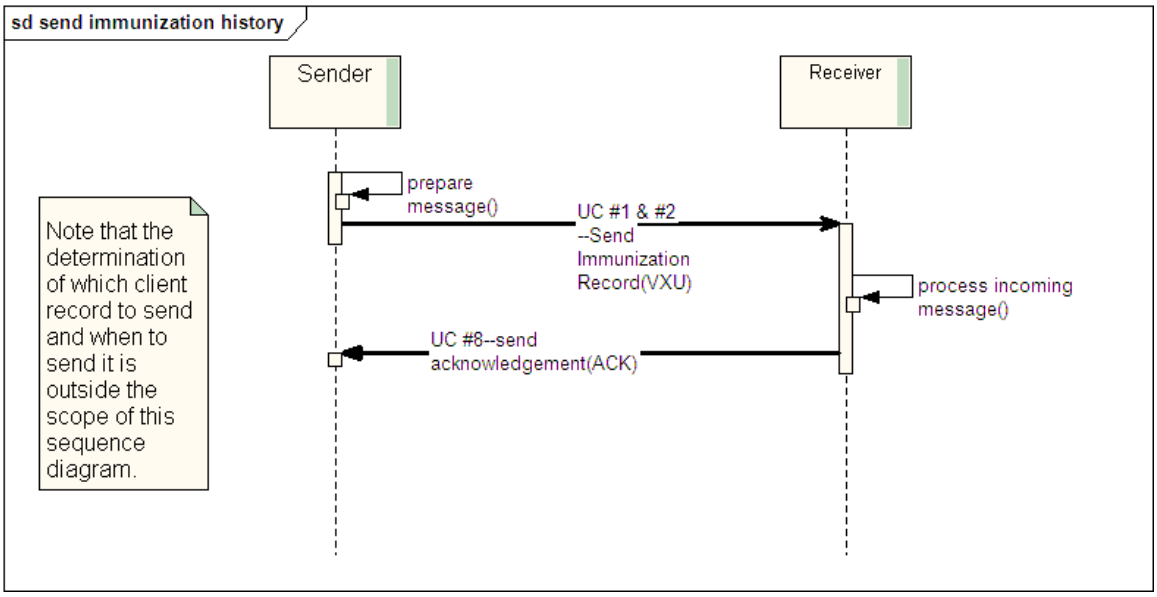

Figure 2-3-Use Cases 1 and 2: Send and Receive Immunization History

This sequence diagram illustrates the message flow. The sender sends an immunization record (Use Case 1). The receiver accepts the message (Use Case 2) and processes it. The receiver may send an acknowledgment message. (See Use Case 9) The transactions that are of interest are indicated by bold arrows.

Use Case 2—Receive Immunization History

Goal: To receive an unsolicited immunization history. It may be an update or a new record. This use case does not have responsibility for the processing of the message. The receiving system may review and accept the immunization history if it chooses, but this outside the scope of this use case.

HL7 version 2.5.1 Message Type: VXU

Precondition: A VXU is received by the receiving system.

Use Case 3—Request Immunization History

Goal: To request an immunization history from another system.
Precondition: A user or other actor requests that the sending system send a request for an immunization history using demographic information and/or other identifiers.

The old VXQ query included implicit identity resolution. If a high confidence candidate was identified, based on demographics and other identifiers, an immunization history was returned in a VXR. If lower confidence candidates were found, a list of candidates was returned for further selection in a VXX. The selection from the VXX informed the re-query with a new VXQ. The approach outlined in this Guide allows this process to be followed using different messages.

Another approach that is common in the informatics world is to separate the identity resolution from the request for content (immunization history in this case). Here the requester sends a query seeking a candidate, based on demographics and other identifiers. The requester selects from the candidates returned and then sends the request for content based on that selection. The identity may be sought from a separate Master Person Index or from the content provider. One industry standard, which supports this approach, is the PDQ query profile by Integrating the Healthcare Enterprise (IHE). The approach outlined in this Guide allows this process to be followed.

A third situation occurs when the requester already knows an identifier meaningful to the responding system. This may occur when the sending system has already sent a record for the person of interest that includes the sender's identifier. Alternatively, it may occur if the requester knows the unique identifier used by the responding system. The approach outlined in this Guide allows this process to be followed.

Since identity resolution is required either implicitly or explicitly, a use case is described for finding a client/candidate (Use Case 4A). That use case contains the alternate flows for the different paths.

Note that more detailed information about the flow of events and options is available in Appendix B.

HL7 version 2.5.1 Message Type: QBP using Request Immunization History query profile.

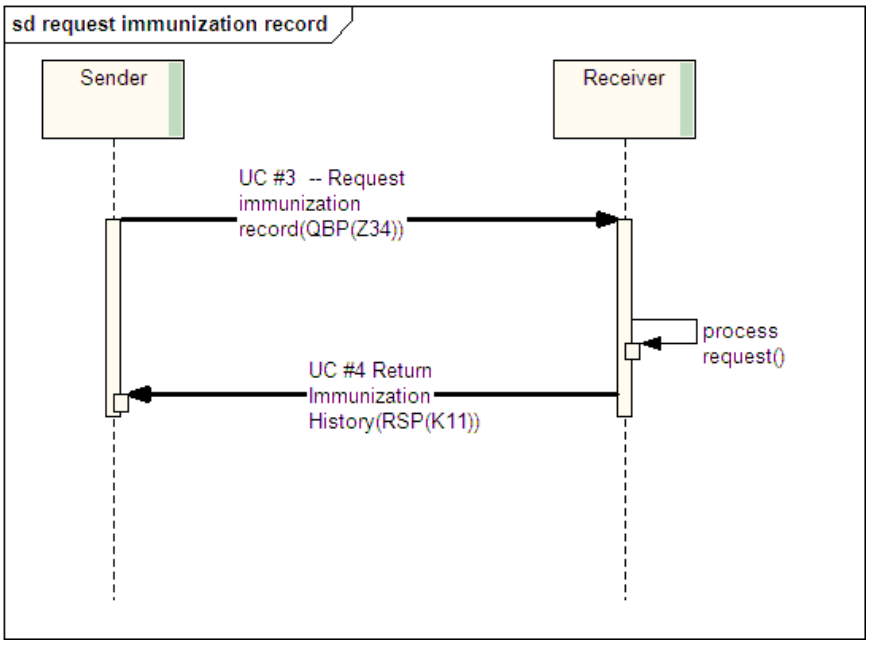

Figure 2-4-Use Cases 3, 4 and 5: Request Immunization History, Respond to Request and Accept Requested History

Note that the sending system process may include confirming that the record returned is the one being sought. This process is not specified here.

Use Case 4—Return Immunization History

Goal: To return an immunization history. It does not include the processes used to find candidate clients for return.

There are 4 possible results:

1. One client matches exactly[7] the criteria sent
2. One or more clients match the criteria sent (inexact match)[8]
3. No clients match the criteria sent
4. There were errors or other problems

Note that systems must deal with the situation where a Client has indicated that his/her records must be protected. (Only the owning provider may view) This should be clearly documented.

See Figure 6.

Standard Reference HL7 version 2.5.1 Message Type: RSP

Precondition: A receiving system receives a request for an immunization history.

HL7 version 2.5.1 Message Type:

QBP using Request Immunization History query profile

Use Case 4A—Find Candidate Clients

Goal: To find one or more candidate clients from another system and select one to be used when requesting an immunization history.

Precondition:
There are two potential preconditions.

1. A user or other actor requests that the sending system send a request for one or more candidate clients using demographic information and/or other identifiers. (This is well specified in the IHE PDQ profile)
2. A receiving system receives a request for immunization history using a request for immunization history query.

[7] The definition of "exact" is a local business rule and should be documented locally.
[8] If more than one client has a high-confidence match with the query parameters, this is an inexact match.

If exactly one high confidence match is found then an immunization history is returned. If this query does not find one high confidence candidate, but rather finds one or more lower confidence candidates then a list of candidates are returned. If more than one high confident match is found, then this is treated as a lower confidence match.

Note that the diagrams below are intended to put the messages in context and do not accurately reflect the architecture that would support the activities.

Request Identity Resolution Prior to Requesting an Immunization History

The following diagram illustrates the process and messages where a system uses a PDQ query to request identifiers and demographics for a client. The result of this process is then used to populate a Request for Immunization History query. Messages have bolded arrows. Other processes are not bolded. It should be noted that the immunization history supplier may also act as the id supplier, but this is not required. This particular Use Case focuses on the interactions between the requester and the id supplier. The other transactions illustrate how this fits into the rest of the process. We assume that the identifier used in the QBP^Q11 is unique within the immunization history supplier.

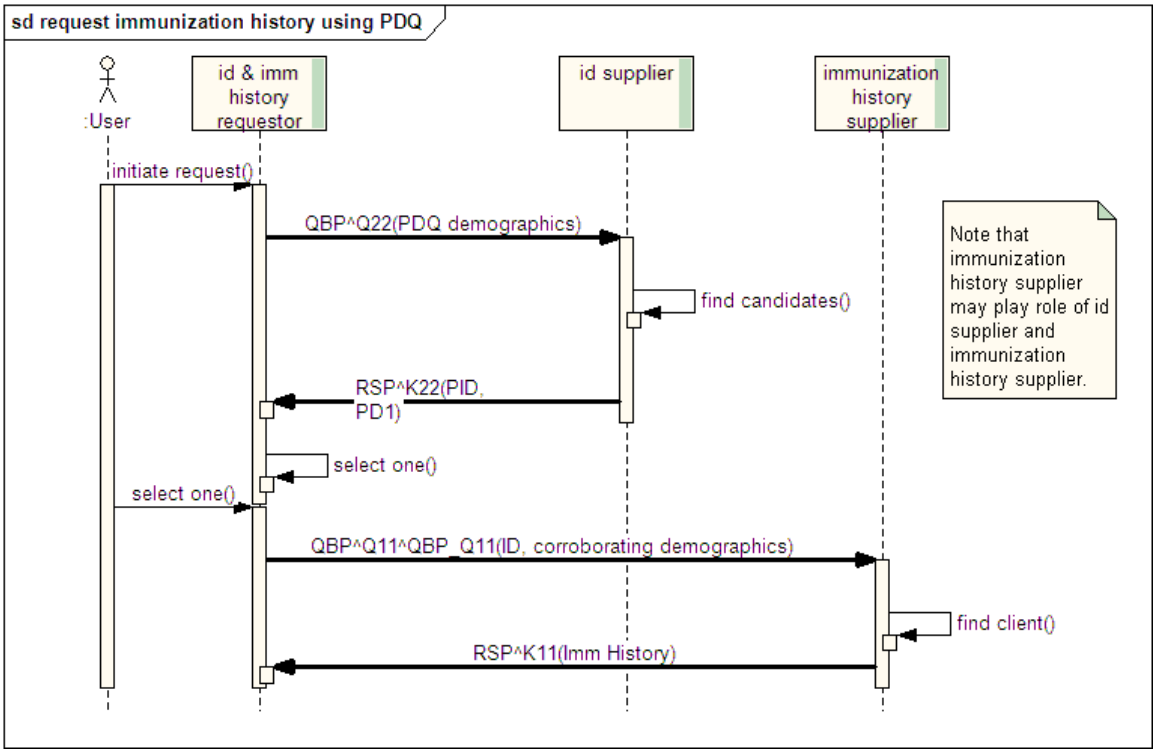

Figure 2-5--Using PDQ to Resolve Identity Prior to Request for Immunization History

Requesting an Immunization History Using Implicit Identity Resolution

The following 2 diagrams illustrate how a system, which uses a Request for Immunization History, relies on implicit identity resolution.

The first drawing illustrates the case when one high confidence candidate is found. The outcome of the find client process is a call for the system to send the immunization history back to the requesting system. Messages are bolded.

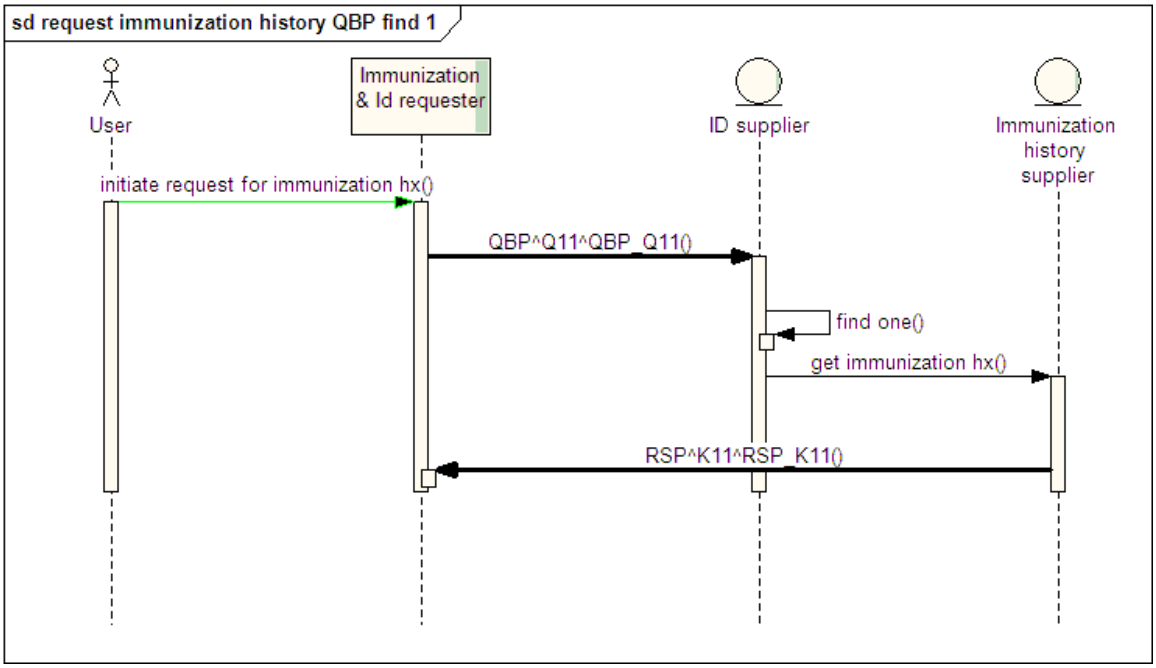

Figure 2-6--Implicit Identity Resolution in Response to a Request for Immunization History When One High-confidence Match Is Found

When the find client process finds lower confidence candidates, then the system returns a list of candidate clients. The user reviews these and selects the one of interest. The selection is used to populate a second Request for Immunization History query. The identity resolution process points to the correct client and an immunization history is returned. The user may choose to refine the search criteria and submit a new query, if he/she believes that a match should have been found.

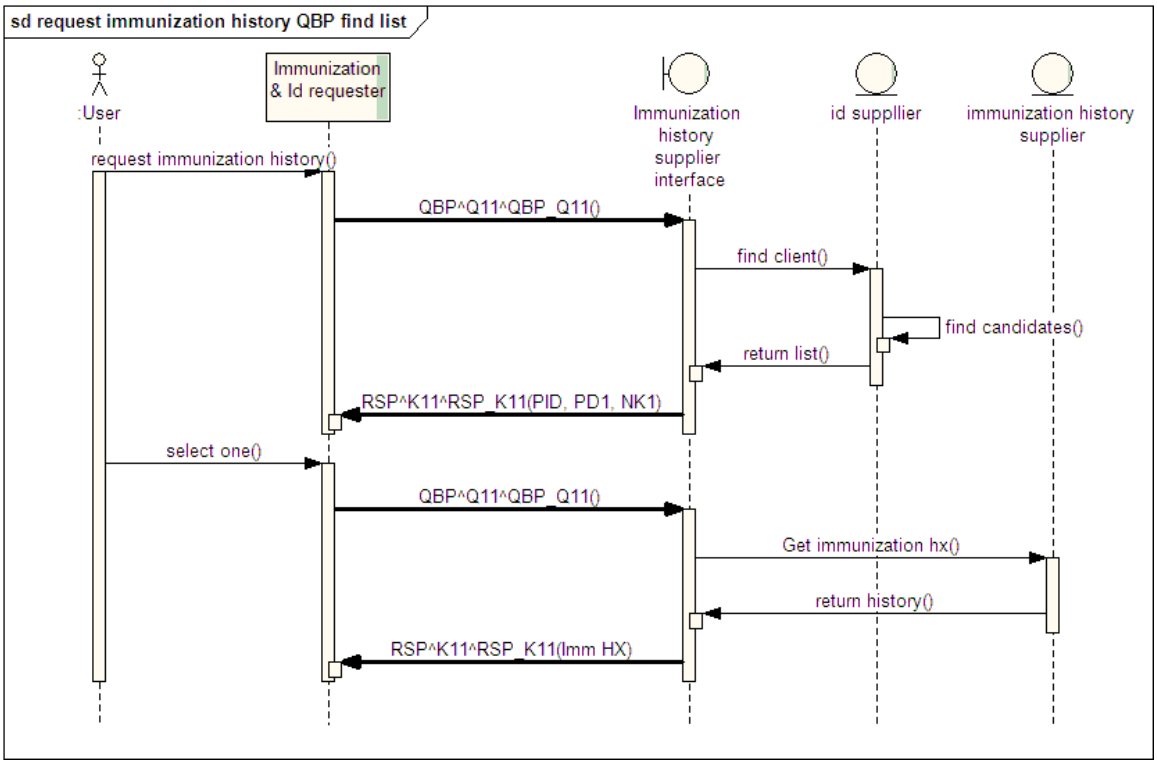

Figure 2-7--Implicit Identity Resolution in Response to a Request for Immunization History When Lower Confidence Candidates Are Found

HL7 version 2.5.1 Message Type:

QBP using Request Immunization History query profile

Or

QBP using PDQ (IHE)

Use Case 5--Accept requested history:

Scope:

The goal of this use case is to accept an immunization history in response to a query for an immunization history from another system.

Standard Reference HL7 version 2.5 Message Type:RSP

Preconditions:A sending system receives a requested immunization history.

Sequence Diagram:

See sequence diagrams for use case 3 above.

Use Case 6—Send Demographic Data

Goal: To send demographic data about a person. It may be an update or a new record. This use case does not have responsibility for the processing of the message. The message will include an indication of the expected/requested acknowledgement.

Standard Reference HL7 version 2.5 Message Type:

The standard messages that may be used for carrying demographic data are VXU and ADT.

Precondition: A user or other actor requests that the sending system send demographic data.

Sequence Diagram:

See Figure 7.

Use Case 7—Accept Demographic Data

Goal: To accept demographic data about a person. It may be an update or a new record. This use case does not have responsibility for the processing of the message. The message will include an indication of the expected/requested acknowledgement.

Standard Reference HL7 version 2.5 Message Type:

The standard messages that may be used for carrying demographic data are VXU, ADT.

Precondition: The receiving system receives demographic data.

Sequence Diagram:

See Figure 7.

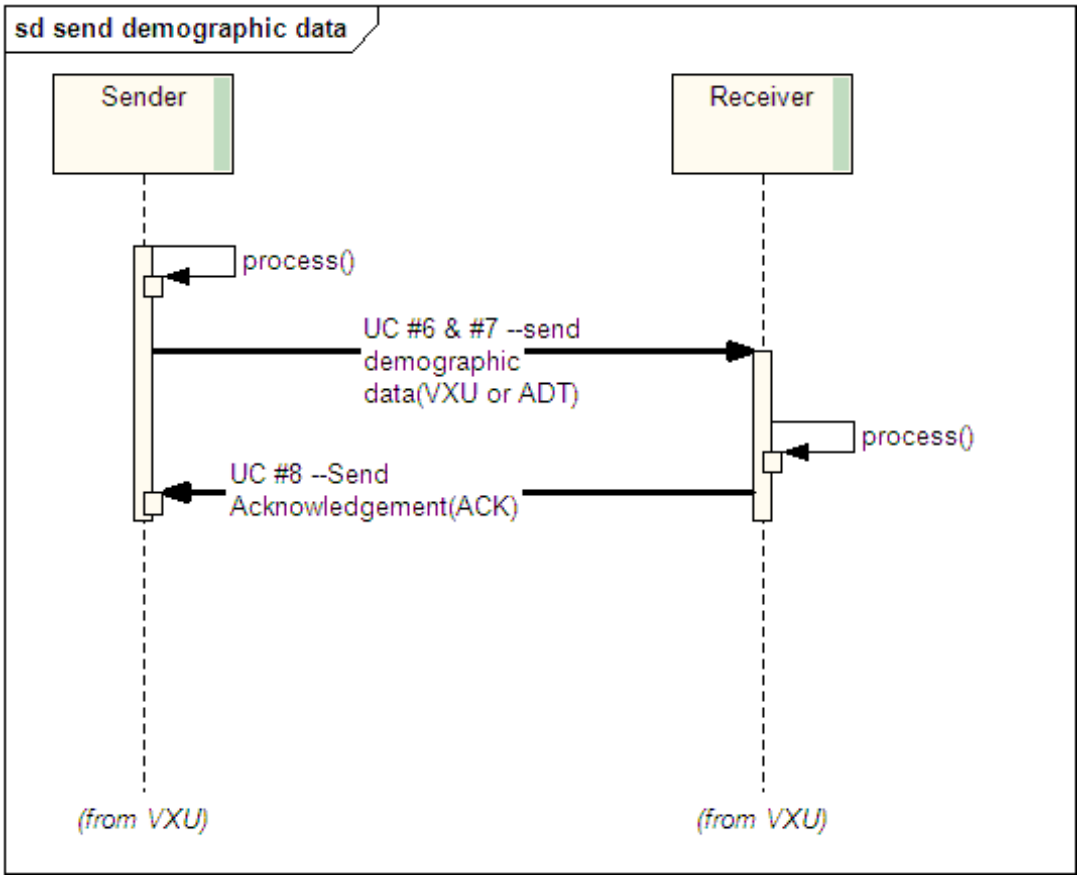

Figure 2-8--Send Demographic Data Via VXU or ADT

Use Case 8--Acknowledge Receipt

Scope:

The goal of this use case is to acknowledge receipt of a message. This can be an immunization history, request for immunization history, demographic update, observation report or request for personal id. It may indicate success or failure. It may include error messages. One example occurs when a query is well-formed, but finds no candidates. In this case the acknowledgement reports this fact.

Standard Reference HL7 version 2.5 Message Type:ACK, RSP

Precondition: A system has processed a message and determined the success of receipt.

Sequence Diagram:

See sequence diagrams for use cases above.

Use Case 9—Report Error

Scope:

The goal of this use case is to send error messages related to messages.

Standard Reference HL7 version 2.5 Message Type: ACK, RSP

Precondition: A system has processed a message and found errors.

Sequence Diagram:

See sequence diagrams for use cases above.

Messaging in the Context of the Business Process

While this document focuses on the format and content of messages from one system to another, it is useful to understand where this fits into the bigger picture of interoperable communication.

The following diagram illustrates the most common message exchange in the IIS context, the VXU (unsolicited immunization record). When the sending system wishes to send a VXU to a receiving system, it must do several steps in preparation:

- Create message[9]
  - Assemble data on person of interest
  - Build the VXU message with this data
- Send the message
  - Connect to the receiving system. The partners must agree on how this is done.
  - The sending system now sends the message over the connection and the receiving system catches the message.

The receiver accomplishes the following steps:

- Process the received message
  - Determine that the message is in the appropriate format.
  - Parse the message into a format that it uses.
  - Evaluate the message components to determine that these are correctly formatted and specified.
- Send an acknowledgement to the sender, indicating the message has been successfully processed.

[9] Identifying which client's record to send is an important consideration, but outside the scope of this document.

- Integrate the received record into the existing data base.[10]
    - Deduplicate on client to be sure that each client only has one record.
    - Deduplicate the events (immunizations, for instance).
    - Insert or update data.

Obviously, the interaction may be more complex than this[11]. The connection may be rejected or fail. The message may be poorly formed or may not contain required information. Part of the message may contain errors, but these errors are not sufficient to reject the entire message.

The business rules for both the sender and the receiver should be clearly specified so that each side understands how the message will be handled.

When illustrating the processes involved in each message below, we will not elaborate on the processes that occur outside the actual message exchange.

[10] Local business rules determine how this occurs and should be documented clearly.
[11] See Appendix B for illustrations of the processing rules expected when handling HL7 messages.

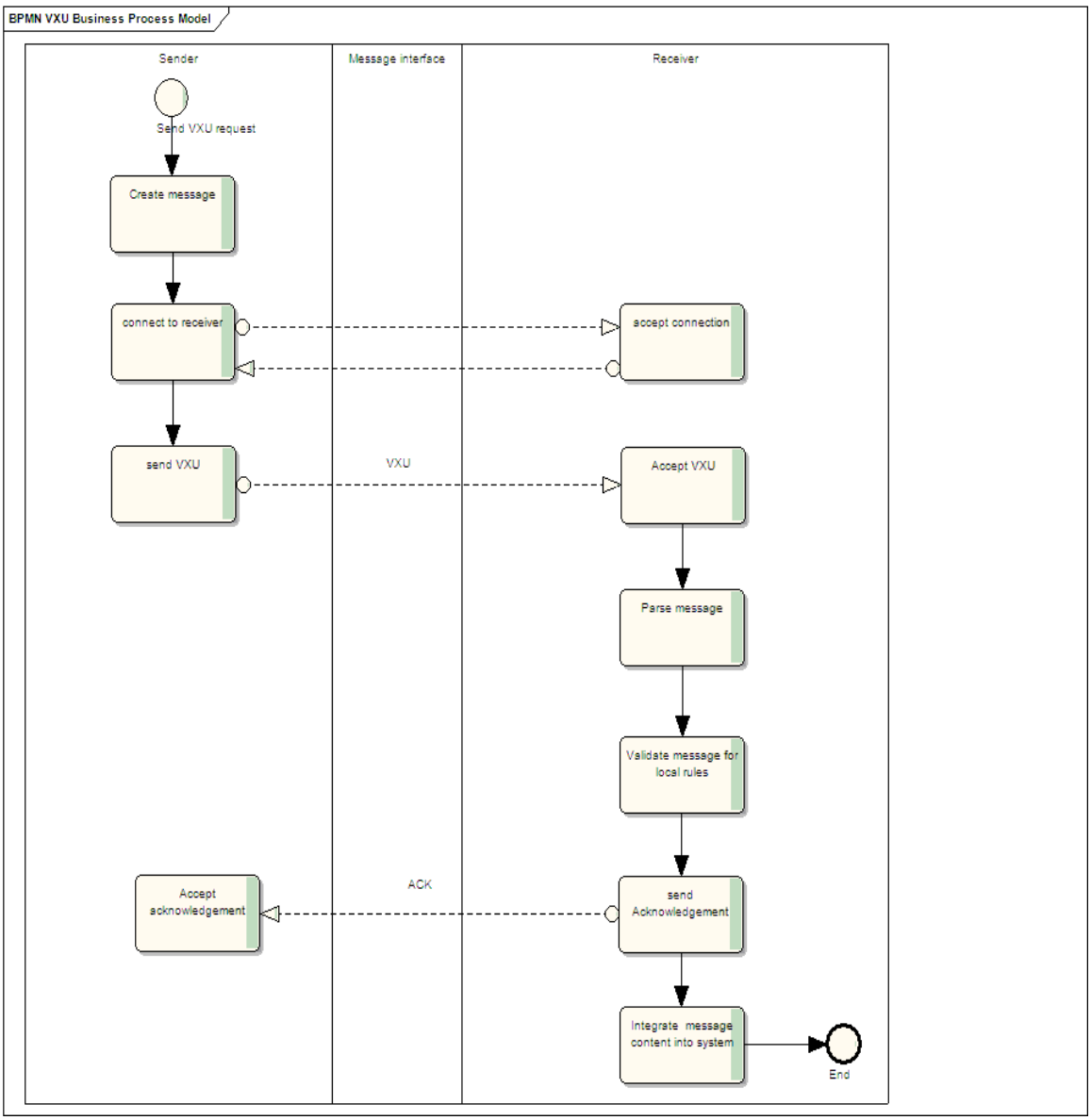

Figure 2-9--VXU Process Model

> **Note:** It is vital that each implementation clearly document the business rules and special handling in a local Implementation Guide or Profile. Local implementers may place further constraints on the specifications found in this Guide. Optional fields or required fields that are allowed to be empty in this Guide may be made required. Repeating fields may be constrained to fewer repetitions.

Appendix B gives detailed example messages and has illustration of the business processes surrounding other message transactions.

3. HL7 Messaging Infrastructure

This section will contain a basic description of the terms and definitions, which are used in this document in order to understand the Health Level 7 standard as it applies to immunization information systems. More detail may be found in the HL7 2.5.1 standard in Chapters 1, 2 and 2A.

HL7 definitions

The terms below are organized to move from the message to subsequently more granular components.

Message: A message is the entire unit of data transferred between systems in a single transmission. It is a series of segments in a sequence defined by the message specifications. These specifications are based on constraints to the HL7 specifications, as described in an Implementation Guide.

Example:

Segment	Description
MSH|…	Message Header
PID|…	Personal Identifiers
ORC|…	Order Segment
RXA|…	Vaccine administered segment

The table above shows an immunization history for the patient identified in the PID. This person has one immunization ordered and recorded.

Segment: A segment is a logical grouping of data fields. Segments within a defined message may be required or optional, may occur only once, or may be allowed to repeat. Each segment is named and is identified by a segment ID, a unique 3-character code.

Example:

PID|||12322^^^Assigning authority^MR^||Savage^Robert^^^^^L^|

This PID segment includes a medical record number and a person's name.

Field: A field is a string of characters and is of a specific data type. Each field is identified by the segment it is in and its position within the segment; e.g., PID-5 is the fifth field of the PID segment. A maximum length of the field is stated as normative information. Exceeding the listed length should not be considered an error. A field is bounded by the | character.

Component: A component is one of a logical grouping of items that comprise the contents of a coded or composite field. Within a field having several components, not all components are required to be valued.

Example: RXA-5 administered code is composed of 6 components.

Code 1^text 1^code set 1^alternate code 2^alt text 2^alt code set 2

Item number: Each field is assigned a unique item number. Fields that are used in more than one segment will retain their unique item number across segments.

Null and empty fields: The null value is transmitted as two double quote marks (“”). A null-valued field differs from an empty field. An empty field should not overwrite previously entered data in the field, while the null value means that any previous value in this field should be overwritten.

Value in Field	Meaning
“” |""|	Nullify the value recorded in the receiving system data base.
<empty field> ||	Make no changes to the record in the receiving data base. The sending system has no information on this field.

Null fields should not be sent in immunization messages. Systems which will send null fields (“”) must specify their use in local implementation guides. Systems which will accept and process null fields, as described above, must specify their use in local implementation guides.

Data type: A data type restricts the contents and format of the data field. Data types are given a 2- or 3-letter code. Some data types are coded or composite types with several components. The applicable data type is listed and defined in each field definition.

Code Sets/Systems: Most data elements will have associated lists of acceptable values in tables supported by a standards organization such as HL7 or CDC. These code sets will include definitions to support common usage.

Delimiters: Delimiter characters are used to separate segments, fields and components in an HL7 message. The delimiter values are given in MSH-2 and used throughout the message. Applications must use agreed upon delimiters to parse the message. Messages used in this Guide shall use the following delimiters:
<CR> = Segment Terminator;
| = Field Separator;
^ = Component Separator;
& = Sub-Component Separator;
~ = Repetition Separator;

\ = Escape Character.

Message syntax: Each message is defined in special notation that lists the segment 3-letter identifiers in the order they will appear in the message. Braces, {}, indicate that one or more of the enclosed group of segments may repeat, and brackets, [ ], indicate that the enclosed group of segments is optional. Note that segments may be nested within the braces and brackets. This will indicate that the nested segments are units within a subgroup of segments. Their Usage is relative to the parent segment in the group.

Z segments: All message types, trigger event codes, and segment ID codes beginning with Z are reserved for locally defined messages. No such codes will be defined within the HL7 Standard. The users of this Guide have agreed to eliminate Z segments from their implementations in order to produce a standard method that will be used nationally to transmit immunization data. The query profiled in this document does have a name code which begins with Z as specified by HL7.

Basic Message Construction Rules

Encoding Rules for Sending

1. Encode each segment in the order specified in the abstract message format.

2. Place the Segment ID first in the segment.

3. Precede each data field with the field separator.

4. Encode the data fields in the order and data type specified in the segment definition table.

5. End each segment with the segment terminator.

6. Components, subcomponents, or repetitions that are not valued at the end of a field need not be represented by component separators. The data fields below, for example, are equivalent:

|^XXX&YYY&&^| is equal to |^XXX&YYY^|
|ABC^DEF^^| is equal to |ABC^DEF|

7. Components, subcomponents, or repetitions that are not valued, but precede components, subcomponents or repetitions that are valued must be represented by

appropriate separators. For example, the following CE data type element has the first triplicate empty and a populated second triplicate:

|^^^ABC^Text^Codesystem|

8. If a field allows repetition (Cardinality maximum > 1), then the length of the field applies to EACH repetition.

Encoding Rules for Receiving

1. If a data segment that is expected is not included, treat it as if all data fields within were not present.

2. If a data segment is included that is not expected, ignore it; this is not an error.

3. If data fields are found at the end of a data segment that are not expected, ignore them; this is not an error.

Implications of the Encoding Rules

The following table lists the expected outcome implied by the encoding rules above.

Table 3-1 Outcome of Encoding Rule Breaches

Condition	Immediate Outcome	Secondary Outcome
Required segment not present.	Message rejected.	Error message returned to sending system.
Segments not in correct order	Out of sequence segment ignored.	If this segment is required, then message rejected.
Segment not expected	Segment is ignored	
Non-repeating segment is repeated	Repeated segment is ignored. First segment is processed normally.	Information in the repeated segment is lost to receiving system.
Required segment has required fields that are not present or rejected due to errors	Message is rejected.	Error message returned to sending system.
Optional segment has required field that is not present or rejected due to errors.	Segment is ignored	Message is not rejected because of this error. Error message returned.

Condition	Immediate Outcome	Secondary Outcome
Required field is not present.	Segment is ignored/rejected.	If segment is required, then message is rejected. If segment is not required, the information in the segment is lost to receiving system.
Required field is rejected due to errors.	Segment is ignored/rejected.	If segment is required, then message is rejected. If segment is not required, the information in the segment is lost to receiving system.
Incoming data value is not in the list of expected values for a field that is constrained to a list of values.	Incoming data are treated as null/empty.	

Note that all errors in processing a message should be communicated back to the sending system unless the initiating system has indicated that no response is desired.

Determining Usage of Segments, Fields and Components

Many fields and segments in HL7 are optional. This guide tightens constraints on some fields to support functionality required from meaningful use of immunization data. The following list the rules applied to the decisions used to determine usage in this Guide.

1. Any segment, field, or component that is required by HL7 standard is required.

2. Any field or component that is a required National Vaccine Advisory Committee (NVAC) Core Data element is required but may be empty[12].

3. Any segment that contains a required NVAC Core data element is required but may be empty.

4. Any segment, field, or component that is retained for backward compatibility in Version 2.5.1 shall be unsupported in this Guide.

5. Any segment, field, or component that is conditional but may be empty in Version 2.5.1 shall be conditional or conditional but may be empty in this Guide, unless this conflicts with 2 or 3 above.

[12] In some cases they may not be empty. Client name may never be empty or null, for instance.

6. All other fields will be left optional.

Table 3-1--Usage Code Interpretations for Fields, Components and Sub-components

Usage Code	Interpretation	Comment
R	Required	A conforming sending application shall populate all "R" elements with a non-empty value. Conforming receiving application shall process or ignore the information conveyed by required elements. A conforming receiving application must not raise an error due to the presence of a required element, but may raise an error due to the absence of a required element.
RE	Required but may be empty	The element may be missing from the message, but must be sent by the sending application if there is relevant data. A conforming sending application must be capable of providing all "RE" elements. If the conforming sending application knows the required values for the element, then it must send that element. If the conforming sending application does not know the required values, then that element will be omitted. Receiving applications will be expected to process or ignore data contained in the element, but must be able to successfully process the message if the element is omitted (no error message should be generated because the element is missing).

Usage Code	Interpretation	Comment
C	Conditional	This usage has an associated condition predicate. This predicate is an attribute within the message. **If the predicate is satisfied:** A conformant sending application must always send the element. A conformant receiving application must process or ignore data in the element. It may raise an error if the element is not present. **If the predicate is NOT satisfied:** A conformant sending application must NOT send the element. A conformant receiving application must NOT raise an error if the condition predicate is false and the element is not present, though it may raise an error if the element IS present.

Usage Code	Interpretation	Comment
CE	Conditional but may be empty	This usage has an associated condition predicate. This predicate is an attribute within the message. **If the predicate is satisfied:** If the conforming sending application knows the required values for the element, then the application must send the element. If the conforming sending application does not know the values required for this element, then the element shall be omitted. The conforming sending application must be capable of knowing the element (when the predicate is true) for all 'CE' elements. If the element is present, the conformant receiving application shall process or ignore the values of that element. If the element is not present. The conformant receiving application shall not raise an error due to the presence or absence of the element. **If the predicate is not satisfied:** The conformant sending application shall not populate the element. The conformant receiving application may raise an application error if the element is present.
O	Optional	This element may be present if specified in local profile. Local partners may develop profiles that support use of this element. In the absence of a profile, conformant sending applications will not send the element. Conformant receiving applications will ignore the element if it is sent, unless local profile specifies otherwise. Conformant receiving applications may not raise an error if it receives an unexpected optional element.
X	Not Supported	The element is not supported. Sending applications should not send this element. Receiving applications should ignore this element if present. A receiving application may raise an

Usage Code	Interpretation	Comment
		error if it receives an unsupported element. Any profile based on this Guide should not specify use of an element that is not supported in this Guide.

Elements that are optional or are not supported for use in immunization messages will be noted in the element table, but not in the element definition text that follow.

Table 3-2--Usage Code Interpretation for Segments

Usage Code	Interpretation	Comment
R	Required	A conforming sending application shall include all “R” segments. Conforming receiving application shall process all required segments. A conforming receiving application must process all required segments. It should raise an error due to the absence of a required segment.
RE	Required but may be empty	The segment may be missing from the message, but must be sent by the sending application if there is relevant data. A conforming sending application must be capable of providing all "RE" segments. If the conforming sending application has data for the required segment, then it must send that segment. Receiving applications will be expected to process the data contained in the segment. It must be able to successfully process the message if the segment is omitted (no error message should be generated because the segment is missing).
O	Optional	This segment may be present if specified in local profile. Local partners may develop profiles that support use of this segment. In the absence of a profile, conforming sending applications will not send the element. Conformant receiving applications will ignore the element if it is sent, unless local profile specifies otherwise.

Usage Code	Interpretation	Comment
X	Not Supported	The segment is not supported. Sending applications should not send this element. Receiving applications should ignore this element if present. Any profile based on this Guide should not specify use of an element that is not supported in this Guide.

Message Attributes Common to All Messages

The following describe how message specifications will be illustrated in this Guide. These terms will be used in the tables specifying messages throughout this Guide.

Table 3-3--Message Attributes

Message Attributes	
Attribute	Description
Segment	Three-character code for the segment and the abstract syntax (i.e., the square and curly braces) [XXX] Optional { XXX } Repeating XXX Required (not inside any braces) [{ XXX }] Optional and Repeating [XXX [YYY]] YYY is nested within the segment block starting with XXX. It is an optional sub-segment to XXX[13] . The whole block is optional. Note that for Segment Groups there will not be a segment code present, but the square and curly braces will still be present.
Name	Name of the Segment or Segment group element.
Usage	Usage of the segment. Indicates if the segment is required, optional, or not supported in a message. See table with Usage Code Interpretation above.
Cardinality	Indicator of the minimum and maximum number of times the element may appear. [0..0] Element never present. [0..1] Element may be omitted and it can have at most, one

[13] YYY may only be included if XXX is present. XXX may be present without YYY.

	occurrence. [1..1] Element must have exactly one Occurrence. [0..n] Element may be omitted or may repeat up to n times. [1..n] Element must appear at least once, and may repeat up to n times. [0..*] Element may be omitted or repeat for an unlimited number of times. [1..*] Element must appear at least once, and may repeat unlimited number of times. [m..n] Element must appear at least m and, at most, n times.

Segment Attributes Common to All Segments

The abbreviated terms and their definitions, as used in the segment table headings, are as follows:

Table 3-4--Segment Attributes

Abbreviation	Description
Seq	Sequence of the elements (fields) as they are numbered in the segment
Len	Recommended maximum length of the element. Lengths are provided only for primitive data types. Lengths should be considered recommendations, not absolutes. The receiver may truncate fields, components, and sub-components longer than the recommended length. The receiver should not fail to process a message simply because fields, components, or sub-components are too long.
Data Type	Data type used for HL7 element. Data type specifications can be found in Chapter 4.
Usage	Indicates whether the field is supported in this Guide. Indicates if the field, component, or subcomponent is required, optional, or conditional in the corresponding segment, field, or component. See Usage Code Interpretation, above. Note: A required field in an optional segment does not mean the segment must be present in the message. It means that if the segment is present, the required fields within that segment must be populated. The same applies to required components of optional fields. If the field is populated, then the required component must be populated. The same applies to required sub-components of optional components. If a component is populated, the required sub-components of that component must also be populated.

Abbreviation	Description
Cardinality	Indicator of the minimum and maximum number of times the element may appear. [0..0] Element never present. [0..1] Element may be omitted and can have at most, one occurrence. [1..1] Element must have exactly one occurrence. [0..n] Element may be omitted or may repeat up to n times. [1..n] Element must appear at least once, and may repeat up to n times. [0..*] Element may be omitted or repeat for an unlimited number of times. [1..*] Element must appear at least once, and may repeat unlimited number of times. [m..n] Element must appear at least m and, at most, n times.
Item #	Unique item identifier in HL7
HL7 Element Name	HL7 descriptor of the element in the segment.
Comment	Lists any constraints imposed and other comments in this Guide

4. HL7 Data Types

Data types are the building blocks that are the foundation of successful interoperability. Each field, component or subcomponent has a data type. Conforming systems agree to adhere to the data type assigned to each component, assuring smooth communication. For example, dates may be formatted in many ways, but to assure interoperability, these need to be constrained and defined. HL7 specifies several formats, but these are compatible with each other. They allow dates to be as granular as needed. The format allows for just a year (YYYY) or for month, day, year, hour, minute, second, etc.

Appendix A contains the tables of value sets referenced by these data types.

Data Types for IIS Use

Data types specify the format and type of data used. A data type may be as simple as a numeric data type, which allows a number. It may be a more complex coded entry that requires a specific set of code values and the name of the code system. Data types may contain subcomponents that are specified by data types.

The following list of data types only includes those that are used by fields that are anticipated for IIS use. Data types for fields that are not used in this Guide are not included, even if they are part of segment that is used.

Table 4-1-- Data Types

Data type	Data Type Name
CE	Coded element
CQ	Composite Quantity with Units
CWE	Coded with Exceptions
CX	Extended Composite Id with Check digit
DT	Date
DTM	Date/Time
EI	Entity Identifier
ERL	Error Location
FC	Financial Class
FN	Family Name
HD	Hierarchic Designator
ID	Coded Values for HL7 Tables
IS	Coded value for User-Defined Tables
LA2	Location with address variation 2
MSG	Message Type
NM	Numeric
PT	Processing Type
SAD	Street Address
SI	Sequence ID
ST	String
TS	Time Stamp
VID	Version Identifier
XAD	Extended Address
XCN	Extended Composite ID Number and Name for Persons
XPN	Extended Person Name
XTN	Extended telephone number

CE -- Coded Element (most uses)

Definition: This data type transmits codes and the text associated with the code.

The following specifications apply to all uses of CE data type EXCEPT RXA-9, *Administration Notes*. That field may use this specification or the specification that follows this section.

Table 4-2 Coded Element (CE)

SEQ	LEN	Data Type	Usage	Value Set	Component Name	Comments
1	999	ST	RE		Identifier	Identifying Code.
2	999	ST	CE		Text	Human readable text that is not further used. If Sequence 1 is populated, this should also be populated.
3	20	ID	C	0396	Name of Coding	If sequence 1 is populated, this field must be populated.
4	999	ST	RE		Alternate Identifier	Alternate Identifying coded.
5	999	ST	CE		Alternate Text	Human readable text that is not further used. If Sequence 4 is populated, this should also be populated.
6	20	ID	C	0396	Name of Alternate	If sequence 4 is populated, this field must be populated.

Note: Sequence 1,2, and 3 are one triplet that are treated as a unit. The other triplet is a separate unit. Either may be populated, but should mean the same thing if both are populated.

The order of the contents is not specified. In the previous guide, the first triplet was reserved for CVX codes in RXA-5. This is no longer true, based on HL7 usage of CE data type.

Identifier (ST)

Definition: Sequence of characters (the code) that uniquely identifies the item being referenced. Different coding schemes will have different elements here.

Text (ST)

Definition: The descriptive or textual name of the identifier, e.g., DTaP. This is not used by the sending or receiving system, but rather facilitates human interpretation of the code.

Name of Coding System (ID)

Definition: Identifies the coding scheme being used in the identifier component. The combination of the **identifier** and **name of coding system** components will be a unique code for a data item. Each system has a unique identifier.

Alternate Identifier (ST)

Definition: An alternate sequence of characters (the code) that uniquely identifies the item being referenced. See usage note in section introduction.

Alternate Text (ST)

Definition: The descriptive or textual name of the alternate identifier, e.g., DTaP. This is not used by the sending or receiving system, but rather facilitates human interpretation of the code.

Name of Alternate Coding System (ID)

Definition: Identifies the coding scheme being used in the alternate identifier component.

Example usage:

From RXA 5, Administered Code:

|50^DTAP-HIB^CVX^90721^DTAP-HIB^C4|

CE -- Coded Element (text only in RXA-9)

Definition: This data type may be used to transmit text only notes.

The following specifications apply to use of CE data type for RXA-9, administration notes only.

Table 4-3 Coded Element (CE) for Text Only RXA-9

SEQ	LEN	Data Type	Usage	Value Set	Component Name	Comments
1	999	ST	X		Identifier	
2	999	ST	R		Text	Human readable text that is not further processed.
3	20	ID	X	0396	Name of Coding	
4	999	ST	X		Alternate Identifier	
5	999	ST	X		Alternate Text	
6	20	ID	X	HL7039 0396	Name of Alternate	

Note: Sequence 1,2, and 3 are one triplet that are treated as a unit. The other triplet is a separate unit. Either may be populated, but should mean the same thing if both are populated.

When transmitting text note only, only the first triplet shall be populated.

Text (ST)

Definition: Free text note regarding the immunization reported in this RXA.

CQ -- Composite Quantity with Units

Definition: This data type carries a quantity and attendant units. Its' primary use in this Guide will be for indicating the maximum number of records to return in a query response.

Table 4-4 Composite Quantity with Units (CQ)

SEQ	LEN	Data Type	Usage	Value set	COMPONENT NAME	COMMENTS
1	16	NM	R		Quantity	The value shall be a positive integer.
2		CE	R	0126	Units	The value shall be RD (records).

Maximum Length: 500

Note: CQ cannot be legally expressed when embedded within another data type. Its use is constrained to a segment field.

Examples:

|10RD| 10 records

Quantity (NM)

Definition: This component specifies the numeric quantity or amount of an entity.

Units (CE)

Definition: This component species the units in which the quantity is expressed. Field-by-field, default units may be defined within the specifications. When the quantity is measured in the default units, the units need not be transmitted. If the quantity is recorded in units different from the default, the units must be transmitted.

CWE -- Coded With Exceptions

Definition: Specifies a coded element and its associated detail. The CWE data type is used when 1) more than one table may be applicable **or** 2) the specified HL7 or externally defined table may be extended with local values **or** 3) when text is in place, the code may be omitted.

Table 4-5 Coded with Exceptions (CWE)

SEQ	LEN	Data Type	Usage	Value Set	Component Name	Comments
1	999	ST	RE		Identifier	Identifying Code.
2	999	ST	CE		Text	Human readable text that is not further used. If Sequence 1 is populated, this should also be populated.
3	20	ID	CE	0396	Name of Coding	If sequence 1 is populated, this field must be populated.
4	999	ST	RE		Alternate Identifier	Alternate Identifying code.
5	999	ST	CE		Alternate Text	Human readable text that is not further used. If Sequence 4 is populated, this should also be populated.
6	20	ID	CE	0396	Name of Alternate	If sequence 4 is populated, this field must be populated.
7	10	ST	O		Coding System Version Id	
8	10	ST	O		Alternate Coding System Version Id	
9	199	ST	O		Original Text	

Note: Sequences 1,2 and 3 are one triplet that are treated as a unit. The other triplet is a separate unit. Either may be populated, but should mean the same things if both are populated.

The order of the contents is not specified. In the previous guide, the first triplet was reserved for CVX codes in RXA-5. This is no longer true, based on HL7 usage of CE data type.

Identifier (ST)

Definition: Sequence of characters (the code) that uniquely identifies the item being referenced. Different coding schemes will have different elements here.

Text (ST)

Definition: The descriptive or textual name of the identifier, e.g., DTaP. This is not used by the sending or receiving system, but rather facilitates human interpretation of the code.

Name of Coding System (ID)

Definition: Identifies the coding scheme being used in the identifier component. The combination of the **identifier** and **name of coding system** components will be a unique code for a data item. Each system has a unique identifier.

Alternate Identifier (ST)

Definition: An alternate sequence of characters (the code) that uniquely identifies the item being referenced. See usage note in section introduction.

Alternate Text (ST)

Definition: The descriptive or textual name of the alternate identifier, e.g., DTaP. This is not used by the sending or receiving system, but rather facilitates human interpretation of the code.

Name of Alternate Coding System (ID)

Definition: Identifies the coding scheme being used in the alternate identifier component.

Example usage:
From RXR: |C28161^IM^NCIT^IM^INTRAMUSCULAR^HL70162|

CX -- Extended Composite ID With Check Digit

Table 4-6 Extended Composite ID with Check Digit(CX)

SEQ	LEN	Data Type	Usage	Value set	COMPONENT NAME	COMMENTS
1	15	ST	R		ID Number	
2	1	ST	O		Check Digit	
3	3	ID	CE	0061	Check Digit Scheme	If sequence 2 is populated, then this sequence must be populated.
4		HD	R	0363	Assigning Authority	
5	5	ID	R	0203	Identifier Type Code	
6		HD	O		Assigning Facility	
7	8	DT	O		Effective Date	
8	8	DT	O		Expiration Date	
9		CWE	O		Assigning Jurisdiction	
10		CWE	O		Assigning Agency or Department	

Definition: This data type is used for specifying an identifier with its associated administrative detail.

Maximum Length: 1913

Note: The check digit and check digit scheme are null if ID is alphanumeric.

Example:

|1234567^^^ME129^MR|

ID (ST)

Definition: The value of the identifier itself.

Check Digit (ST)

This component should be valued null.

Check Digit Scheme (ID)

This component should be valued if Check digit is populate, otherwise it should be null.

Assigning Authority (HD)

The assigning authority is a unique name of the system (or organization or agency or department) that creates the data. . Refer to User-defined Table 0363 – Assigning authority for suggested values. This table shall be maintained by each IIS. The first component shall be used for this unique name. The second and third may be used if OIDs[14] are recorded.

Identifier Type Code (ID)

A code corresponding to the type of identifier. In some cases, this code may be used as a qualifier to the “Assigning authority” component. Refer to HL7 Table 0203 - Identifier type for suggested values.

DT -- Date

Definition: Specifies the century and year with optional precision to month and day.

Table 4-7 Date (DT)

SEQ	LEN	Data Type	Usage	Value Set	Component Name	Comments
1	8		R		Date	

As of v 2.3, the number of digits populated specifies the precision using the format specification YYYY(MM[DD]). Thus:

- Four digits are used to specify a precision of "year"
- Six are used to specify a precision of "month"
- Eight are used to specify a precision of "day."

Examples:

|19880704|

|199503|

|2000|

[14] OIDs are object identifiers. According to wikipeida: “Health Level Seven (HL7), a standards-developing organization in the area of electronic health care data exchange, is an assigning authority at the 2.16.840.1.113883 (joint-iso-itu-t.country.us.organization.hl7) node. HL7 maintains its own OID registry, and as of January 1, 2008 it contained almost 3,000 nodes, most of them under the HL7 root. The Centers for Disease Control and Prevention has also adopted OIDs to manage the many complex values sets or "vocabularies" used in public health. The various OIDs are available in the Public Health Information Network (PHIN) Vocabulary Access and Distribution System (VADS).”

DTM -- Date/Time

Table 4-8 Date/Time (DTM)

SEQ	LEN	Data Type	Usage	Value Set	Component Name	Comments
	24		R		Date/time	

The number of characters populated (excluding the time zone specification) specifies the precision.

Format: YYYY[MM[DD[HH[MM[SS[.S[S[S[S]]]]]]]][+/-ZZZZ].

Thus:

- Four digits are used to specify a precision of "year"
- Six are used to specify a precision of "month"
- Eight are used to specify a precision of "day."
- the first ten are used to specify a precision of "hour”
- the first twelve are used to specify a precision of "minute”
- the first fourteen are used to specify a precision of "second”
- the first sixteen are used to specify a precision of "one tenth of a second”
- the first nineteen are used to specify a precision of " one ten thousandths of a second”

When the time zone is not included, it is presumed to be the time zone of the sender.

Example: |199904| specifies April 1999.

EI -- Entity Identifier

Definition: The entity identifier defines a given entity within a specified series of identifiers.

Table 4-9 Entity Identifier (EI)

SEQ	LEN	Data Type	Usage	Value Set	COMPONENT NAME	COMMENTS
1	199	ST	RE		Entity Identifier	
2	20	IS	C	0363	Namespace ID	If Entity identifier is populated, then this field shall be populated.
3	199	ST	CE		Universal ID	If Entity Identifier field is not populated, then this field shall be populated. When populated, it shall be an OID.
4	6	ID	C	0301	Universal ID Type	If Universal Id is populated, this field must also be populated. When populated, it shall be constrained to ISO.

Maximum Length: 427

Entity Identifier (ST)

The first component, <entity identifier>, is defined to be unique within the series of identifiers created by the <assigning authority>, defined by a hierarchic designator, represented by component 2.

Namespace ID (IS)

The assigning authority is a unique identifier of the system (or organization or agency or department) that creates the data. Refer to User-defined Table 0363 – Assigning authority for suggested values.

Universal ID (ST)

This is a universal id associated with this entity. It must be linked to the Universal Id Type below. If populated, it shall be an OID.

Universal ID Type (ID)

This universal id type is drawn from HL7 Table 0301. If populated, it shall be ISO.

Example:
From MSH 21 profile identifier:
|Z34^CDCPHINVS|

ERL -- Error Location

Table 4-10 Error Location (ERL)

SEQ	LEN	Data Type	Usage	Value Set	COMPONENT NAME	COMMENTS
1	3	ST	R		Segment ID	The 3-character name for the segment (i.e. PID)
2	2	NM	R		Segment Sequence	
3	2	NM	RE		Field Position	This should not be populated if the error refers to the whole segment.
4	2	NM	RE		Field Repetition	This should be populated whenever Field Position is populated.
5	2	NM	RE		Component Number	Should be populated ONLY when a particular component cause the error.

6	2	NM	RE		Sub-Component Number	Should be populated ONLY when a particular sub-component cause the error.

Definition: This data type identifies the segment and its constituent where an error has occurred.

Maximum Length: 18

Segment ID (ST)

Definition: Specifies the 3-letter name for the segment.

Segment Sequence (NM)

Definition: Identifies the segment occurrence within the message. That is, for the first instance of the segment in the message the number shall be 1.

Field Position (NM)

Definition: Identifies the number of the field within the segment. The first field is assigned a number of 1. Field number should not be specified when referring to the entire segment.

Field Repetition (NM)

Definition: Identifies the repetition number of the field. The first repetition is counted as 1. If a Field Position is specified, but Field Repetition is not, Field Repetition should be assumed to be 1. If Field Position is not specified, Field Repetition should not be specified.

Component Number (NM)

Definition: Identifies the number of the component within the field. The first component is assigned a number of 1. Component number should not be specified when referring to the entire field.

Sub-Component Number (NM)

Definition: Identifies the number of the sub-component within the component. The first sub-component is assigned a number of 1. Sub-component number should not be specified when referring to the entire component.

Example:
|RXA^1^5^1^3|

FC -- Financial Class

Definition: This data type identifies the financial class a person belongs to.

Table 4-11 Financial Class (FC)

SEQ	LEN	Data Type	Usage	Value Set	COMPONENT NAME	COMMENTS
1	20	IS	R	0064	Financial Class Code	
2		TS	RE		Effective Date	

Maximum Length: 47

Financial Class Code (IS)

This component contains the financial class assigned to a person. User-defined Table 0064 - Financial class is used as the HL7 identifier for the user-defined table of values for this component.

Effective Date (TS)

This component contains the effective date/time of the person's assignment to the financial class specified in the first component. For instance, this is used to indicate when a person's financial class was determined.

Example from PV1: |V01^20090101|

FN -- Family Name

Definition: This data type contains a person's family name or surname.

Table 4-12 Family Name

SEQ	LEN	Data Type	Usage	Value Set	COMPONENT NAME	COMMENTS
1	50	ST	R		Surname	
2	20	ST	O		Own Surname Prefix	
3	50	ST	O		Own Surname	
4	20	ST	O		Surname Prefix From Partner/Spouse	
5	50	ST	O		Surname From Partner/Spouse	

Surname (ST)

This is the person's last name.

Example from PID: |Anyperson|

HD -- Hierarchic Designator

HITSP is recommending the use of OIDs in fields using this data type.

Definition: HD identifies an (administrative or system or application or other) entity that has responsibility for managing or assigning a defined set of instance identifiers (such as placer or filler number, patient identifiers, provider identifiers, etc.). This entity could be a particular health care application such as a registration system that assigns patient identifiers, a governmental entity such as a licensing authority that assigns professional identifiers or drivers' license numbers, or a facility where such identifiers are assigned.

Table 4-13 Hierachical Designator (HD)

SEQ	LEN	Data Type	Usage	Value Set	COMPONENT NAME	COMMENTS
1	20	IS	CE	0300	Namespace ID	This field is used for a locally defined name/id. It may be used as previous version 2.3.1 Implementation Guide specified. If the field or component is required, then this field shall be populated if components 2 and 3 are not populated.

SEQ	LEN	Data Type	Usage	Value Set	COMPONENT NAME	COMMENTS
2	199	ST	CE		Universal ID	This field shall be populated if component 3 is populated. This field must be populated if field 1 is empty. This field shall used OID if populated
3	6	ID	CE	0301	Universal ID Type	This field shall be populated if component 2 is populated. If populated the value is constrained to ISO

IS -- Namespace ID

User-defined Table 0300 - Namespace ID is used as the HL7 identifier for the user-defined table of values for this component.

Note: When the HD is used in a given segment (either as a field or as a component of another data type) this table may be re-defined (given a different user-defined table number and name) by the technical committee responsible for that segment.

Universal ID (ST)

The HD's second component, <universal ID> (UID), is a string formatted according to the scheme defined by the third component, <universal ID type> (UID type). The UID is intended to be unique over time within the UID type. It is rigorously defined. Each UID must belong to one of the specifically enumerated schemes for constructing UIDs (defined by the UID type). The UID (second component) must follow the syntactic rules of the particular universal identifier scheme (defined by the third component). Note that these syntactic rules are not defined within HL7 but are defined by the rules of the particular universal identifier scheme (defined by the third component).

Universal ID Type (ID)

The third component governs the interpretation of the second component of the HD. If the third component is a known UID refer to HL7 Table 0301 - Universal ID type for valid values, then the second component is a universal ID of that type. Since the second component is constrained to OID, then the value of component 3 shall be ISO, when populated.

Example from MSH:
|CA12^^|

ID -- Coded Values for HL7 Tables

Definition: This data type is used for coded values from an HL7 table.

The value of such a field follows the formatting rules for an ST field except that it is drawn from a table of legal values. There shall be an HL7 table number associated with ID data types. An example of an ID field is PID 24 –Multiple Birth Indicator. This data type should be used only for HL7 tables (see Appendix A).

Example from PID Multiple Birth Indicator:

|Y|

IS -- Coded Values for User Defined Tables

Definition: This data type is used for codes from User-defined Tables.

Table 4-14 Coded Values for User Defined Tables (IS)

SEQ	Length	Data Type	Usage	Value Sets	COMPONENT NAME	COMMENTS
	20 (Max.)				Coded Value for User-Defined Tables	

Maximum Length: 20

The value of such a field follows the formatting rules for a ST field except that it is drawn from a site-defined (or user-defined) table of legal values. There shall be an HL7 table number associated with IS data types. This data type should be used only for user-defined tables (see Section 2.5.3.6 - Table).

Example from PID Sex:
|F|

LA2 -- Location with Address Variation 2

Definition: Specifies a location and its address.

Table 4-15 Location with Address Variation 2

SEQ	LEN	Data Type	Usage	Value Sets	COMPONENT NAME	COMMENTS
1	20	IS	O	0302	Point of Care	This represents the location within a facility that the service was provided. This is not the clinic site where an event occurred.
2	20	IS	O	0303	Room	
3	20	IS	O	0304	Bed	
4		HD	RE		Facility	This represents the location that the service was provided. For example the clinic.
5	20	IS	O	0306	Location Status	
6	20	IS	O	0305	Patient Location Type	
7	20	IS	O	0307	Building	

SEQ	LEN	Data Type	Usage	Value Sets	COMPONENT NAME	COMMENTS
8	20	IS	O	0308	Floor	
9	120	ST	O		Street Address	
10	120	ST	O		Other Designation	
11	50	ST	O		City	
12	50	ST	O		State or Province	
13	12	ST	O		Zip or Postal Code	
14	3	ID	O	0399	Country	
15	3	ID	O	0190	Address Type	
16	50	ST	O		Other Geographic Designation	

Maximum Length: 790

Note: Replaces the CM data type used in 4.14.5.13 RXD-13, 4.14.6.11 RXG-11 and 4.14.7.11 RXA-11 as of V 2.5.

MSG -- Message Type

Definition: This field contains the message type, trigger event, and the message structure ID for the message.

Table 4-16 Message Type (MSG)

SEQ	LEN	Data Type	Usage	Value Set	COMPONENT NAME	COMMENTS
1	3	ID	R	0076	Message Code	
2	3	ID	R	0003	Trigger Event	
3	7	ID	R	0354	Message Structure	

Maximum Length: 15.

Note: Replaces the CM data type used in 2.16.9.9 MSH-9 as of v 2.5.

Message Code (ID)

Definition: Specifies the message type code. Refer to HL7 Table – Message Type in section 2.17.1 for valid values.

This table contains values such as ACK, ADT, ORU etc.

See section 2.5.1- Messages for further discussion.

Trigger Event (ID)

Definition: Specifies the trigger event code. Refer to HL7 Table – Event Type in section 2.17.2 for valid values.

This table contains values like A01, V01, R01 etc.

Message Structure (ID)

Definition: Specifies the abstract message structure code. Refer to HL7 Table 0354.

Example from MSH:

|VXU^V04^VXU_V04|

The third component was not required in version 2.3.1. It is now required.

NM -- Numeric

Definition: A number represented as a series of ASCII numeric characters consisting of an optional leading sign (+ or -), the digits and an optional decimal point. In the absence of a sign, the number is assumed to be positive. If there is no decimal point the number is assumed to be an integer.

Table 4-17 Numeric (NM)

SEQ	LEN	Data Type	Usage	Value Set	COMPONENT NAME	COMMENTS
	16				Numeric	

Maximum Length: 16

Examples:

|999|

|-123.792|

Leading zeros, or trailing zeros after a decimal point, are not significant. For example, the following two values with different representations, “01.20” and “1.2," are identical. Except for the optional leading sign (+ or -) and the optional decimal point (.), no non-numeric ASCII characters are allowed. Thus, the value <12 should be encoded as a structured numeric (SN) (preferred) or as a string (ST) (allowed, but not preferred) data type.

PT -- Processing Type

Definition: This data type indicates whether to process a message as defined in HL7 Application (level 7) Processing rules.

Table 4-18 Processing Type (PT)

SEQ	LEN	Data Type	Usage	Value Set	COMPONENT NAME	COMMENTS
1	1	ID	R	0103	Processing ID	

SEQ	LEN	Data Type	Usage	Value Set	COMPONENT NAME	COMMENTS
2	1	ID	X	0207	Processing Mode	Constrain to null, which implies current processing.

Maximum Length: 3

Processing ID (ID)

A value that defines whether the message is part of a production, training, or debugging system. Refer to HL7 Table 0103 - Processing ID for valid values.

SAD -- Street Address

Definition: This data type specifies an entity's street address and associated detail.

Table 4-19 Street Address (SAD)

SEQ	LEN	Data Type	Usage	Value Set	COMPONENT NAME	COMMENTS
1	120	ST	R		Street or Mailing Address	
2	50	ST	O		Street Name	
3	12	ST	O		Dwelling Number	

Maximum Length: 184

Note: Appears ONLY in the XAD data type

Street or Mailing Address (ST)

Definition: This component specifies the street or mailing address of a person or institution.

SI -- Sequence Id

Definition: A non-negative integer in the form of a NM field. The uses of this data type are defined in the chapters defining the segments and messages in which it appears.

Table 4-20 Sequence Id (SI)

SEQ	LEN	Data Type	Usage	Value set	COMPONENT NAME	COMMENTS
	4				Sequence ID	

Maximum Length: 4. This allows for a number between 0 and 9999 to be specified.

ST – String

Definition:

String data is left justified with trailing blanks optional. Any displayable (printable) ACSII characters (hexadecimal values between 20 and 7E, inclusive, or ASCII decimal values between 32 and 126), except the defined escape characters and defined delimiter characters.

TS -- Time Stamp

Definition: Specifies a point in time.

Table 4-21 Time Stamp (TS)

SEQ	LEN	Data Type	Usage	Value Set	COMPONENT NAME	COMMENTS
1	24	DTM	R		Time	
2	1	ID	X	0529	Degree of Precision	

Maximum Length: 26

Time (DTM)

Definition: The point in time.

VID -- Version Id

Definition: This specifies the HL7 version.

Table 4-22 Version ID (VID)

SEQ	LEN	Data Type	Usage	Value Set	COMPONENT NAME	COMMENTS
1	5	ID	R	0104	Version ID	
2		CE	O	0399	Internationalization Code	
3		CE	O		International Version ID	

Maximum Length: 973

Version ID (ID)

Used to identify the HL7 version. Refer to HL7 Table 0104 – Version ID in section 2.15.9.12 for valid values.

XAD -- Extended Address

Definition: This data type specifies the address of a person, place or organization plus associated information.

Table 4-23 Extended Address (XAD)

SEQ	LEN	Data Type	Usage	Value Sets	COMPONENT NAME	COMMENTS
1		SAD	RE		Street Address	
2	120	ST	RE		Other Designation	
3	50	ST	RE		City	
4	50	ST	RE		State or Province	
5	12	ST	RE		Zip or Postal Code	
6	3	ID	O	0399	Country	Null defaults to USA
7	3	ID	R	0190	Address Type	
8	50	ST	O		Other Geographic Designation	
9	20	IS	O	0289	County/Parish Code	
10	20	IS	O	0288	Census Tract	
11	1	ID	O	0465	Address Representation Code	
12		DR	X		Address Validity Range	deprecated as of v 2.5
13		TS	O		Effective Date	
14		TS	O		Expiration Date	

Maximum Length: 631

Note: Replaces the AD data type as of v 2.3.

Example of usage for US:

|1000 Hospital Lane^Ste. 123^Ann Arbor ^MI^99999^^B|

This would be formatted for postal purposes as

1000 Hospital Lane

Ste. 123

Ann Arbor MI 99999

Street Address (SAD)

Definition:This is the street address.

Other Designation (ST)

Definition: Second line of address. In US usage, it qualifies address. Examples: Suite 555 or Fourth Floor. This can be used for dwelling number.

City (ST)

Definition: This component specifies the city, or district or place where the addressee is located depending upon the national convention for formatting addresses for postal usage.

State or Province (ST)

Definition: This component specifies the state or province where the addressee is located. State or province should be represented by the official postal service codes for that country.

Zip or Postal Code (ST)

Definition: This component specifies the zip or postal code where the addressee is located. Zip or postal codes should be represented by the official codes for that country. In the US, the zip code takes the form 99999[-9999], while the Canadian postal code takes the form A9A9A9, and the Australian Postcode takes the form 9999.

Country (ID)

Definition: This component specifies the country where the addressee is located. HL7 specifies that the 3-character (alphabetic) form of ISO 3166 be used for the country code. Refer to HL7 Table 0399 – Country code in section 2.15.9.17 for valid values.

Address Type (ID)

Definition: This component specifies the kind or type of address. Refer to HL7 Table 0190 - Address type for valid values.

County/Parish Code (IS)

A code that represents the county in which the specified address resides. User-defined Table 0289 - County/parish is used as the HL7 identifier for the user-defined table of values for this component. When this component is used to represent the county (or parish), component 8 <other geographic designation> should not duplicate it (i.e., the use of <other geographic designation> to represent the county is allowed only for the purpose of backward compatibility, and should be discouraged in this and future versions of HL7).

Allowable values: codes defined by government.

Effective Date (TS)

Definition: The first date, if known, on which the address is valid and active.

Expiration Date (TS)

Definition: The last date, if known, on which the address is valid and active.

XCN - Extended Composite ID Number And Name For Persons

Definition: This data type identifies a person using a unique id and name. The ID is associated with an entity such as an organization, which assigns the ID.

Table 4-24 Extended Composite ID Number and Name (XCN)

SEQ	LEN	DT	Usage	TBL#	COMPONENT NAME	COMMENTS
1	15	ST	C		ID Number	If name fields below are not populated, then this field must be populated.
2		FN	RE		Family Name	
3	30	ST	RE		Given Name	
4	30	ST	RE		Second and Further Given Names or Initials Thereof	
5	20	ST	O		Suffix (e.g., JR or III)	
6	20	ST	O		Prefix (e.g., DR)	
7	5	IS	X	0360	Degree (e.g., MD)	Use Professional suffix in sequence 21.
8	4	IS	O	0297	Source Table	Since we are requiring assigning authority, this field may be left empty.
9		HD	C	0363	Assigning Authority	If the id field is populated, then this field must be populated.
10	1	ID	O	0200	Name Type Code	If the name fields are populated and this is empty, then the type defaults to L, legal name.
11	1	ST	O		Identifier Check Digit	
12	3	ID	C	0061	Check Digit Scheme	If check digit identifier is populated, then this field must indicate the check digit scheme.
13	5	ID	O	0203	Identifier Type Code	Constrain to values in the published HL7 table 0203 only.
14		HD	O		Assigning Facility	
15	1	ID	O	0465	Name Representation Code	

SEQ	LEN	DT	Usage	TBL#	COMPONENT NAME	COMMENTS
16		CE	O	0448	Name Context	
17		DR	X		Name Validity Range	
18	1	ID	X	0444	Name Assembly Order	
19		TS	O		Effective Date	
20		TS	O		Expiration Date	
21		ST	O		Professional Suffix	
22		CWE	O		Assigning Jurisdiction	
23		CWE	O		Assigning Agency or Department	

Maximum Length: 3002

Note: Replaces CN data type as of v 2.3.

This data type is used where there is a need to specify the ID number and name of a person.

ID number (ST)

This string refers to the coded ID assigned by the assigning authority.

Family Name (FN)

This component contains the person's surname.

Given Name (ST)

First name.

Second and Further Given Names or Initials Thereof (ST)

Multiple middle names may be included by separating them with spaces.

Suffix (ST)

Used to specify a name suffix (e.g., Jr. or III).

Prefix (ST)

Used to specify a name prefix (e.g., Dr.).

Source Table (IS)

User-defined Table 0297 – CN ID source is used as the HL7 identifier for the user-defined table of values for this component. Used to delineate the first component.

Assigning Authority (HD)

The assigning authority is a unique identifier of the system (or organization or agency of department) that creates the data. User-defined Table 0363 – Assigning authority is used as the HL7 identifier for the user-defined table of values for the first sub-component of the HD component, <namespace ID>.

Note: When the HD data type is used in a given segment as a component of a field of another data type, User-defined Table 0300 - Namespace ID (referenced by the first sub-component of the HD component) may be re-defined (given a different user-defined table number and name) by the technical committee responsible for that segment.

By site agreement, implementers may continue to use User-defined Table 0300 – Namespace ID for the first sub-component.

Name Type Code (ID)

A code that represents the type of name. Refer to HL7 Table 0200 - Name type for valid values. If the field is not populated then the value is assumed to be L.

Identifier Check Digit (ST)

The check digit in this data type is not an add-on produced by the message processor. It is the check digit that is part of the identifying number used in the sending application. If the sending application does not include a self-generated check digit in the identifying number, this component should be valued null.

Check Digit Scheme (ID)

Definition: Contains the code identifying the check digit scheme employed.

Refer to HL7 Table 0061 - Check digit scheme for valid values.

Identifier Type Code (IS)

A code corresponding to the type of identifier. In some cases, this code may be used as a qualifier to the <assigning authority> component. Refer to HL7 Table 0203 - Identifier type for suggested values.

Professional Suffix (ST)

Definition: Used to specify an abbreviation, or a string of abbreviations denoting qualifications that support the person's profession, (e.g., licenses, certificates, degrees, affiliations with professional societies, etc.). The Professional Suffix normally follows the Family Name when the Person Name is used for display purposes. Please note that this component is an unformatted string and is used for display purposes only.

Extended Person Name (XPN)

Definition: This is used for representing a person's name.

Table 4-25 Extended Person Name (XPN)

SEQ	LEN	Data Type	Usage	Value Sets	COMPONENT NAME	COMMENTS
1		FN	R		Family Name	
2	30	ST	R		Given Name	

SEQ	LEN	Data Type	Usage	Value Sets	COMPONENT NAME	COMMENTS
3	30	ST	RE		Second and Further Given Names or Initials Thereof	
4	20	ST	O		Suffix (e.g., JR or III)	
5	20	ST	O		Prefix (e.g., DR)	
6	6	IS	X	0360	Degree (e.g., MD)	Use Professional suffix in sequence 14
7	1	ID	RE	0200	Name Type Code	
8	1	ID	O	0465	Name Representation Code	
9		CE	O	0448	Name Context	
10		DR	X		Name Validity Range	
11	1	ID	O	0444	Name Assembly Order	
12		TS	O		Effective Date	
13		TS	O		Expiration Date	
14	199	ST	O		Professional Suffix	

Maximum Length: 1103

Note: Replaces PN data type as of v 2.3.

Family Name (FN)

This is the person's surname or family name.

Given Name (ST)

First name.

Second and Further Given Names or Initials Thereof (ST)

Multiple middle names may be included by separating them with spaces.

Suffix (ST)

Used to specify a name suffix (e.g., Jr. or III).

Prefix (ST)

Used to specify a name prefix (e.g., Dr.).

Name Type Code (ID)

A code that represents the type of name. Refer to HL7 Table 0200 - Name type for valid values.

Note: The content of Legal Name is country specific. In the US the legal name is the same as the current married name.

Professional Suffix (ST)

This is the person's professional suffix. Replaces degree above.

XTN - Extended Telecommunication Number

Definition: This contains the extended telephone number.

Table 4-26 XTN Extended Telecommunication Number (XTN)

SEQ	LEN	Data Type	Usage	Value Set	COMPONENT NAME	COMMENTS
1	199	ST	X		Telephone Number	Deprecated as of 2.3
2	3	ID	R	0201	Telecommunication Use Code	
3	8	ID	RE	0202	Telecommunication Equipment Type	
4	199	ST	CE		Email Address	If the telecommunication type code is NET, then this field shall be populated.
5	3	NM	O		Country Code	
6	5	NM	CE		Area/City Code	If the telecommunication type code is not NET, then this field shall be populated.
7	9	NM	CE		Local Number	If the telecommunication type code is not NET, then this field shall be populated.
8	5	NM	O		Extension	
9	199	ST	O		Any Text	

SEQ	LEN	Data Type	Usage	Value Set	COMPONENT NAME	COMMENTS
10	4	ST	O		Extension Prefix	
11	6	ST	O		Speed Dial Code	
12	199	ST	O		Unformatted Telephone number	

Maximum Length: 850

Note: Components five through nine reiterate the basic function of the first component in a delimited form that allows the expression of both local and international telephone numbers. As of 2.3, the recommended form for the telephone number is to use the delimited form rather than the unstructured form supported by the first component .

The old implementation guide (2.3.1) allowed the first component to be used for phone number. This is not supported by this Guide.

Note: Replaces TN data type as of v 2.3

Example: A primary residence number

^PRN^PH^^^734^6777777

Telecommunication Use Code (ID)

A code that represents a specific use of a telecommunication number. Refer to HL7 Table 0201 - Telecommunication use code for valid values.

Telecommunication Equipment Type (ID)

A code that represents the type of telecommunication equipment. Refer to HL7 Table 0202 - Telecommunication equipment type for valid values.

Email Address (ST)

The email address for the entity.

Area/city Code (NM)

The telephone area code for the entity.

Phone Number (NM)

The phone number for the entity.

Extension (NM)

The extension to the phone.

5. Segments and Message Details

This chapter will contain specifications for each segment used. It will indicate which fields are supported or required and describe any constraints on these fields. Chapter 6 will then address how these building blocks are assembled into specific messages that meet the use cases listed in Chapter 2.

Table 5-1 Message Segments

Segment (Name/Role)	Definition	Message Usage	Usage	Note
BHS (Batch Header Segment)	The Batch Header Segment wraps a group of 1 or more messages. These may be a mixture of acceptable message types. This segment is not required for real-time messaging. That is, a stream of messages may be sent without a BHS. A system may choose to require BHS for all groups of messages, but should specify this requirement in a local implementation Guide.	Any	Optional	Used at the beginning of any batch of messages.
BTS (Batch Trailer Segment)	The BTS segment defines the end of a batch. It is required if the message has a matching BHS.	Any	Required if message starts with BHS.	Used to mark the end of any batch of messages. If the batch of messages starts with a BHS, then this segment is required.
ERR (Error Segment)	The error segment reports information about errors in processing the message. The segment may repeat. Each error	ACK, RSP	Ability to create and process is required for	Used to return information about errors.

Segment (Name/Role)	Definition	Message Usage	Usage	Note
	will have its' own ERR segment.		conformant systems.	
EVN (Event Segment)	The EVN segment is used to communicate necessary trigger event information to receiving applications. Valid event types for all chapters are contained in HL7 Table 0003 - Event Type	ADT	Required for ADT message.	Used to convey event trigger information.
FHS (File Header Segment)	The file header segment may be used to group one or more batches of messages. This is a purely optional segment, even if batches are sent. Its' use is not anticipated for use in real-time transactions. Any system that anticipates its use should specify this in a local implementation Guide.	Any	Optional	Used to mark the beginning of a file of batches.
FTS (File Trailer Segment)	The FTS segment defines the end of a file of batches. It is only used when the FHS segment is used.	Any	Required to terminate a file of batches. (Matches FHS)	Used to mark the end of a file of batches. If a file of batches has an FHS at the beginning, then this segment is required.
IN1-3 (Insurance Segment)	The IN1-IN3 segments contain insurance policy coverage information necessary to produce	VXU	Optional	This segment is not anticipated for use in immunization messages, but may be specified for local use.

Segment (Name/Role)	Definition	Message Usage	Usage	Note
	properly pro-rated and patient and insurance bills.			
MSA (Message Acknowledgement Segment)	This segment is included in the query response (RSP) and acknowledgment (ACK) messages. It contains information used to identify the receiver's acknowledgement response to an identified prior message.	RSP, ACK	Ability to create and process is required for conformant systems.	
MSH (Message Segment Header)	The MSH segment defines the intent, source, destination, and some specifics of the syntax of a message.	All	Ability to create and process is required for conformant systems.	This begins every message and includes information about the type of message, how to process it and who it was created by.
NK1 (Next of Kin Segment)	The NK1 segment contains information about the patient's next of kin or other related parties. Any associated parties may be identified.	VXU, ADT, RSP	Ability to create and process is required for conformant systems.	Used to carry information about the next of kin for a client.
NTE (Note Segment)	The NTE segment is used for sending notes and comments. It is used in relation to OBX in the VXU and RSP.	VXU, ADT, RSP	Ability to create and process is required for conformant	Used to carry a note related to the parent segment.

Segment (Name/Role)	Definition	Message Usage	Usage	Note
			systems.	
OBX (Observation Result Segment)	The observation result segment has many uses. It carries observations about the object of its parent segment. In the VXU/RSP it is associated with the RXA or immunization record. The basic format is a question and an answer.	ADT, VXU, RSP	Ability to create and process is required for conformant systems.	Used to report one atomic part of an observation.
ORC (Order Request Segment)	The Common Order segment (ORC) is used to transmit fields that are common to all orders (all types of services that are requested). While not all immunizations recorded in an immunization message are able to be associated with an order, each RXA must be associated with one ORC, based on HL7 2.5.1 standard.	VXU, RSP	Ability to create and process is required for conformant systems.	Used to give information about a group of one or more orders (typically RXA).
PD1 (Patient Demographic Segment)	The patient additional demographic segment contains demographic information that is likely to change about the patient. In immunization messages, this is information about the need to protect the client's information, how they should be part of	VXU, RSP, ADT	Ability to create and process is required for conformant systems.	Used to give information about a patient. A primary use in immunization messages is to give information about privacy and whether contact is allowed.

Segment (Name/Role)	Definition	Message Usage	Usage	Note
	reminder efforts and their current status in the IIS.			
PID (Patient Identifier Segment)	This segment contains permanent patient identifying and demographic information that, for the most part, is not likely to change. Used by all applications as the primary means of communicating patient identification information. frequently.	VXU, ADT, RSP	Ability to create and process is required for conformant systems.	Used to carry information about the patient/client.
PV1 (Patient Visit Segment)	This segment contains information related to a specific visit.	VXU, ADT, RSP	Ability to create and process is required for conformant systems.	Used to carry information about a given visit. Used in immunization messages to carry information about client eligibility for various funding sources.
QAK (Query acknowledgement segment)	The QAK segment contains information sent with responses to a query.	RSP	Ability to create and process is required for conformant systems.	
QPD	Query parameter definition	QBP, RSP	Ability to create and process is	

Segment (Name/Role)	Definition	Message Usage	Usage	Note
			required for conformant systems.	
RCP	Response control parameter segment	QBP	Ability to create and process is required for conformant systems.	
RXA	Pharmacy/Treatment Administration Segment	VXU, RSP	Ability to create and process is required for conformant systems.	
RXR	Pharmacy/Treatment Route Segment	VXU, RSP	Ability to create and process is required for conformant systems.	

BHS—Batch Header Segment

Table 5-2 Batch Header Segment (BHS)

SEQ	LEN	Data Type	Cardinality	Value set	ITEM #	ELEMENT NAME	Usage	Constraint
1	1	ST	[1..1]		00081	Batch Field Separator	R	The BSH.1 field shall be |
2	3	ST	[1..1]		00082	Batch Encoding Characters	R	The BSH.2 field shall be ^~\&
3		HD	[0..1]		00083	Batch Sending Application	O	Null
4		HD	[0..1]		00084	Batch Sending Facility	O	Null
5		HD	[0..1]		00085	Batch Receiving Application	O	Null
6		HD	[0..1]		00086	Batch Receiving Facility	O	Null
7		TS	[0..1]		00087	Batch Creation Date/Time	O	Null
8	40	ST	[0..1]		00088	Batch Security	O	Null
9	20	ST	[0..1]		00089	Batch Name/ID/Type	O	Null
10	80	ST	[0..1]		00090	Batch Comment	O	Null
11	20	ST	[0..1]		00091	Batch Control ID	O	Null
12	20	ST	[0..1]		00092	Reference Batch Control ID	O	Null

BHS field definitions

BHS-1 Batch Field Separator (ST) 00081

Definition: This field contains the separator between the segment ID and the first real field, BHS-2-batch encoding characters. As such it serves as the separator and defines the character to be used as a separator for the rest of the message. The required value is |,(ASCII 124). Note that this field is different from other fields and immediately follows the Segment name code.

BHS|

⇑

separator

BHS-2 Batch Encoding Characters (ST) 00082

Definition: This field contains the four characters in the following order: the component separator, repetition separator, escape characters, and subcomponent separator. The required values are ^~\& (ASCII 94, 126, 92, and 38, respectively).

BTS—Batch Trailer Segment

Table 5-3 Batch Trailer Segment (BTS)

SEQ	LEN	Data Type	Cardinality	Value Set	ITEM #	ELEMENT NAME	Usage	Constraint
1	10	ST	[0..1]		00093	Batch Message Count	O	
2	80	ST	[0..1]		00090	Batch Comment	O	
3	100	NM	[0..1]		00095	Batch Totals	O	

BTS field definitions

BTS-1 - BTS-3 Not anticipated to be used for immunization messages.

Example: BTS||

ERR—Error Segment

Note that the ERR-1 field is not supported in Version 2.5.1.

It may continue to be used for versions 2.4 and earlier as specified in the earlier Implementation Guide. It is the ONLY field that will be included in an ERR segment if the MSH indicates that the message with the error was a version prior to 2.5.

Table 5-4 Error Segment (ERR)

SEQ	LEN	Data Type	Cardinality	Value Set	ITEM #	ELEMENT NAME	Usage	Constraint
1		ELD	[0..0]		00024	Error Code and Location	X	Not supported for Version 2.5 and above.
2	18	ERL	[0..1][15]		01812	Error Location	RE	If an error involves the entire message (e.g. the message is not parse-able.) then location has no meaning. In this case, the field is left empty.
3		CWE	[1..1]	0357	01813	HL7 Error Code	R	
4	2	ID	[1..1]	0516	01814	Severity	R	
5		CWE	[0..1]	0533	01815	Application Error Code	O	
6	80	ST	[0..1]		01816	Application Error Parameter	O	
7	2048	TX	[0..1]		01817	Diagnostic Information	O	
8	250	TX	[0..1]		01818	User Message	O	This field may contain free text that may be displayed to a user. It is not intended for any further processing.
9	20	IS	[0..1]	0517	01819	Inform Person Indicator	O	
10		CWE	[0..1]	0518	01820	Override Type	O	
11		CWE	[0..1]	0519	01821	Override Reason Code	O	

[15] This Guide does not support repeat of this field. It assumes that each error will be contained in one ERR segment. If the same error occurs more than once, there will be one ERR for each.

SEQ	LEN	Data Type	Cardinality	Value Set	ITEM #	ELEMENT NAME	Usage	Constraint
12		XTN	[0..1]		01822	Help Desk Contact Point	O	

ERR field definitions:

Note that ERR-1 is not supported for use in messages starting with version 2.5.

ERR-2 Error Location (ERL) 01812

Definition: Identifies the location in a message related to the identified error, warning or message. Each error will have an ERR, so no repeats are allowed on this field. This field may be left empty if location is not meaningful. For example, if is unparseable, an ERR to that effect may be returned.

ERR-3 HL7 Error Code (CWE) 01813

Definition: Identifies the HL7 (communications) error code. Refer to HL7 Table 0357 – Message Error Condition Codes for valid values.

ERR-4 Severity (ID) 01814

Definition: Identifies the severity of an application error. Knowing if something is Error, Warning or Information is intrinsic to how an application handles the content. Refer to HL7 Table 0516 - Error severity for valid values. If ERR-3 has a value of "0", ERR-4 will have a value of "I".

ERR-5 Application Error Code (CWE) 01815

Definition: Application specific code identifying the specific error that occurred. Refer to User-Defined Table 0533 – Application Error Code for suggested values.

If the message associated with the code has parameters, it is recommended that the message be indicated in the format of the java .text.MessageFormat approach[16]. This style provides information on the parameter type to allow numbers, dates and times to be formatted appropriately for the language.

[16] Details on MessageFormat can be found at *http://java.sun.com/products/jdk/1.2/docs/api/java/text/MessageFormat.html*.

ERR-6 Application Error Parameter (ST) 01816

Definition: Additional information to be used, together with the Application Error Code, to understand a particular error condition/warning/etc. This field can repeat to allow for up to 10 parameters.

ERR-8 User Message (TX) 01818

Definition: The text message to be displayed to the application user. This is not intended to be processed further by the receiving system.

Example with error in PID:

ERR||PID^1^5|101^Required field missing^HL70357^^^|E|

EVN - Event Type Segment

.

Table 5-5 Event Segment (EVN)

SEQ	LEN	Data Type	Cardinality	Value set	ITEM#	ELEMENT NAME	Usage	Comment
1	3	ID	[0.. 1]	0003	00099	Event Type Code	O	
2		TS	[1..1]		00100	Recorded Date/Time	R	
3		TS	[0..1]		00101	Date/Time Planned Event	O	
4	3	IS	[0..1]	0062	00102	Event Reason Code	O	
5		XCN	[0..*]	0188	00103	Operator ID	O	
6		TS	[0..1]		01278	Event Occurred	O	
7		HD	[0..1]		01534	Event Facility	O	

EVN field definitions

EVN-2 Recorded Date/Time (TS) 00100

Definition: Most systems will default to the system date/time when the transaction was entered, but they should also permit an override.

FHS—File Header Segment

Table 5-6 File Header Segment (FHS)

SEQ	LEN	Data Type	Cardinality	Value Set	ITEM #	ELEMENT NAME	Usage	Comment
1	1	ST	[1..1]		00067	File Field Separator	R	The FSH.1 field shall be |
2	4	ST	[1..1]		00068	File Encoding Characters	R	The FSH.2 field shall be ^~\&
3		HD	[0..1]		00069	File Sending Application	O	Null
4		HD	[0..1]		00070	File Sending Facility	O	Null
5		HD	[0..1]		00071	File Receiving Application	O	Null
6		HD	[0..1]		00072	File Receiving Facility	O	Null
7		TS	[0..1]		00073	File Creation Date/Time	O	Null
8	40	ST	[0..1]		00074	File Security	O	Null
9	20	ST	[0..1]		00075	File Name/ID	O	Null
10	80	ST	[0..1]		00076	File Header Comment	O	Null
11	20	ST	[0..1]		00077	File Control ID	O	Null
12	20	ST	[0..1]		00078	Reference File Control ID	O	Null

FHS field definitions

FHS-1 File Field Separator (ST) 00067

Definition: This field has the same definition as the corresponding field in the MSH segment. The value shall be |.

Note that this field is different from other fields and follows the segment name code immediately.

FHS|

FHS-2 File Encoding Characters (ST) 00068

Definition: This field has the same definition as the corresponding field in the MSH segment. The value shall be ^~\&

FTS—File Trailer Segment

Table 5-7 File Trailer Segment (FTS)

SEQ	LEN	Data Type	Cardinality	Value set	ITEM #	ELEMENT NAME	Usage	Comment
1	10	NM	[0..1]		00079	File Batch Count	O	
2	80	ST	[0..1]		00080	File Trailer Comment	O	

IN1—Insurance Segment (IN2, IN3)

These segments are not anticipated for use in immunization messaging. They are not described or specified further in this Guide. Local implementations may document use for local purposes in local implementation Guide.

MSA—Message Acknowledgement Segment

Table 5-8 Message Acknowledgement Segment (MSA)

SEQ	LEN	Data Type	Cardinality	Value Set	ITEM #	ELEMENT NAME	Usage	Comment
1	2	ID	[1..1]	0008	00018	Acknowledgment Code	R	
2	20	ST	[1..1]		00010	Message Control ID	R	
3	80	ST	[0..1]		00020	Text Message	O	
4	15	NM	[0..1]		00021	Expected Sequence Number	O	
5			[0..1]		00022	Delayed Acknowledgment Type	O	
6		CE	[0..0]	0357	00023	Error Condition	X	

MSA field definitions

MSA-1 Acknowledgment Code (ID) 00018

Definition: This field contains an acknowledgment code, see message processing rules. Refer to HL7 Table 0008 - Acknowledgment code for valid values.

MSA-2 Message Control ID (ST) 00010

Definition: This field contains the message control ID of the message sent by the sending system. It allows the sending system to associate this response with the message for which it is intended. This field echoes the message control id sent in MSH-10 by the initiating system.

MSH—Message Header Segment

HL7 ATTRIBUTE TABLE - MSH - MESSAGE HEADER

Table 5-9 Message Header Segment (MSH)

SEQ	LEN	Data Type	Cardinality	Value set	ITEM #	ELEMENT NAME	Usage	Constraint
1	1	ST	[1..1]		00001	Field Separator	R	The MSH.1 field shall be |
2	4	ST	[1..1]		00002	Encoding Characters	R	The MSH.2 field shall be ^~\&
3		HD	[0..1]	0361	00003	Sending Application	RE	No constraint
4		HD	[0..1]	0362	00004	Sending Facility	RE	No constraint
5		HD	[0..1]	0361	00005	Receiving Application	RE	No constraint
6		HD	[0..1]	0362	00006	Receiving Facility	RE	No constraint
7		TS	[1..1]		00007	Date/Time Of Message	R	The degree of precision must be at least to the minute, and the time zone must be included (format YYYYMMDDHHMM[SS[.S[S[S[S]]]]]+/-ZZZZ).
8	40	ST	[0..1]		00008	Security	O	Null
9	15	MSG	[1..1]		00009	Message Type	R	
10	20	ST	[1..1]		00010	Message Control ID	R	
11	3	PT	[1..1]		00011	Processing ID	R	
12		VID	[1..1]		00012	Version ID	R	2.1, 2.2, 2.3,2.3.1, 2.4,2.5.1
13	15	NM	[0..1]		00013	Sequence Number	O	Null
14	180	ST	[0..1]		00014	Continuation Pointer	O	Null

SEQ	LEN	Data Type	Cardinality	Value set	ITEM #	ELEMENT NAME	Usage	Constraint
15	2	ID	[0..1]	0155	00015	Accept Acknowledgement Type	RE	
16	2	ID	[0..1]	0155	00016	Application Acknowledgment Type	RE	AL-always, NE-Never, ER-Error/reject only, SU successful completion only
17	3	ID	[0..1]	0399	00017	Country Code	O	Use 3 character country code from ISO 3166. If is empty, assume USA
18	16	ID	[0..1]	0211	00692	Character Set	O	blank defaults to ASCII printable
19		CE	[0..1]		00693	Principal Language Of Message	O	blank
20	20	ID	[0..1]	0356	01317	Alternate Character Set Handling Scheme	O	blank
21		EI	[0..*]		01598	Message Profile Identifier	O	This field will be required for use whenever a Profile is being used.

MSH field definitions

MSH-1 Field Separator (ST) 00001

Definition: This field contains the separator between the segment ID and the first real field, MSH-2-encoding characters. As such it serves as the separator and defines the character to be used as a separator for the rest of the message. Required value is |, (ASCII 124).

Example:

MSH|
↑

MSH-2 Encoding Characters (ST) 00002

Definition: This field contains the four characters in the following order: the component separator, repetition separator, escape character, and subcomponent separator. Required values are ^~\& (ASCII 94, 126, 92, and 38, respectively).

MSH-3 Sending Application (HD) 00003

Definition: This field uniquely identifies the sending application. In the case of an IIS, it will be found in the list of IIS applications in Appendix A, User-defined table 0300. This is not the product, but rather the name of the specific instance. For instance, the IIS in Georgia(GRITS) is an instance based on the Wisconsin IIS (WIR). The code for GRITS would be specific to GRITS. Additional locally defined codes may be added to accommodate local needs. The first component shall be the name space id found in User-defined Table 0300, including local additions to this table. The second and third components are reserved for use of OIDs.

MSH-4 Sending Facility (HD) 00004

Definition: This field identifies the organization responsible for the operations of the sending application. Locally defined codes may be added to accommodate local needs. The first component shall be the name space id found in User-defined Table 0300. The second and third components are reserved for use of OIDs or other universal identifiers.

MSH-5 Receiving Application (HD) 00005

Definition: This field uniquely identifies the receiving application. In the case of an IIS, it will be found in the list of IIS applications in Appendix A, User-defined table 0300. This is not the product, but rather the name of the specific instance. For instance, the IIS in Georgia(GRITS) is an instance based on the Wisconsin IIS (WIR). The code for GRITS would be specific to GRITS. Additional locally defined codes may be added to accommodate local needs. The first component shall be the name space id found in User-defined Table 0300. The second and third components are reserved for use of OIDs.

MSH-6 Receiving Facility (HD) 00006

Definition: This field identifies the organization responsible for the operations of the receiving application. Locally defined codes may be added to accommodate local needs. The first component shall be the name space id found in User-defined Table 0300. The second and third components are reserved for use of OIDs.

MSH-7 Date/Time Of Message (TS) 00007

Definition: This field contains the date/time that the sending system created the message. The degree of precision must be at least to the minute. The time zone must be specified and will be used throughout the message as the default time zone.

Note: This field was made required in version 2.4. Messages with versions prior to 2.4 are not required to value this field. This usage supports backward compatibility.

MSH-9 Message Type (MSG) 00009

Definition: This field contains the message type, trigger event, and the message structure ID for the message. Refer to HL7 Table 0076 - Message type for valid values for the message type code. This table contains values such as ACK, ADT, VXU, ORU etc. The following table lists those anticipated to be used by IIS.

Table 5-10 Message Types

Transaction	Message type
Unsolicited update of immunization record	VXU
Unsolicited update of demographic data	ADT
Query to another system	QBP
Response to query	RSP

Refer to HL7 Table 0003 - Event type for valid values for the trigger event. This table contains values like A01, O01, R01 etc.

Message structure component is required.

MSH-10 Message Control ID (ST) 00010

Definition: This field contains the identifier assigned by the sending application (MSH.3) that uniquely identifies a message instance. This identifier is unique within the scope of the sending facility (MSH.4), sending application (MSH.3), and the YYYYMMDD portion of message date (MSH.7). The receiving system echoes this ID back to the sending system in the Message acknowledgment segment (MSA). The content and format of the data sent in this field is the responsibility of the sender. The receiver returns exactly what was sent in response messages.

MSH-11 Processing ID (PT) 00011

Definition: This field is used to decide whether to process the message as defined in HL7 Application (level 7) Processing rules. Reference Table HL7 0103 in Appendix A. The choices are Production, Debugging and Training. In most cases, P or Production should be used.

MSH-12 Version ID (VID) 00012

Definition: This field contains the identifier of the version of the HL7 messaging standard used in constructing, interpreting, and validating the message. Only the first component need be populated.

Messages conforming to the specifications in this Guide shall indicate that the version is 2.5.1. Messages indicating an earlier version shall follow the specifications in the 2.3.1 Guide.

MSH-15 Accept Acknowledgment Type (ID) 00015

Definition: This field identifies the conditions under which accept acknowledgments are required to be returned in response to this message. Required for enhanced acknowledgment mode. Refer to HL7 Table 0155 - Accept/application acknowledgment conditions for valid values.

Accept acknowledgement indicates if the message was safely received or not. It does not indicate successful processing. Application acknowledgement indicates the outcome of processing.

MSH-16 Application Acknowledgment Type (ID) 00016

Definition: This field contains the conditions under which application acknowledgments are required to be returned in response to this message.

Required for enhanced acknowledgment mode.

Note: If MSH-15-accept acknowledgment type and MSH-16-application acknowledgment type are omitted (or are both null), the original acknowledgment mode rules are used. This means that, unless otherwise specified, the receiving application will send acknowledgment when it has processed the message.

MSH-17 Country Code (ID) 00017

Definition: This field contains the country of origin for the message. The values to be used are those of ISO 3166,.[17] The ISO 3166 table has three separate forms of the country code: HL7 specifies that the 3-character (alphabetic) form be used for the country code. If this field is not valued, then assume that the code is USA.

Refer to HL7 Table 0399 – Country code for the 3-character codes as defined by ISO 3166-1.

MSH-21 Message Profile Identifier (EI) 01598

Definition: Sites may use this field to assert adherence to, or reference, a message profile. Message profiles contain detailed explanations of grammar, syntax, and usage for a particular message or set of messages. Chapter 7 describes the query profile for requesting an immunization history. It also includes child profiles that constrain the response to the query.

[17] Available from ISO 1 Rue de Varembe, Case Postale 56, CH 1211, Geneve, Switzerland

This field will be required whenever a profile is being used to constrain the message.

NK1—Next of Kin Segment

The NK1 segment contains information about the patient's other related parties. Any associated parties may be identified. Utilizing NK1-1 - set ID, multiple NK1 segments can be sent to patient accounts. That is, each subsequent NK1 increments the previous set ID by 1. So if 3 NK1 were sent in one message, the first would have a set id of 1, the second would have 2 and the third would have 3.

Table 5-11-Next of Kin Segment (NK1)

SEQ	LEN	Data Type	Cardinality	Value set	ITEM#	ELEMENT NAME	Usage	Constraint
1	4	SI	[1..1]		00190	Set ID - NK1	R	
2		XPN	[1..*]		00191	Name	R	The first instance is the legal name and is required.
3		CE	[1..1]	0063	00192	Relationship	R	
4		XAD	[0..*]		00193	Address	RE	The first instance shall be the primary address.
5		XTN	[0..*]		00194	Phone Number	RE	The first instance shall be the primary phone number.
6		XTN	[0..*]		00195	Business Phone Number	O	
7		CE	[0..1]	0131	00196	Contact Role	O	
8	8	DT	[0..1]		00197	Start Date	O	
9	8	DT	[0..1]		00198	End Date	O	
10	60	ST	[0..1]		00199	Next of Kin / Associated Parties Job Title	O	
11		JCC	[0..1]	0327/ 0328	00200	Next of Kin / Associated Parties Job Code/Class	O	
12		CX	[0..1]		00201	Next of Kin / Associated Parties Employee Number	O	
13		XON	[0..1]		00202	Organization Name - NK1	O	
14		CE	[0..1]	0002	00119	Marital Status	O	
15	1	IS	[0..1]	0001	00111	Administrative Sex	O	
16		TS	[0..1]		00110	Date/Time of Birth	O	
17	2	IS	[0..1]	0223	00755	Living Dependency	O	

SEQ	LEN	Data Type	Cardinality	Value set	ITEM#	ELEMENT NAME	Usage	Constraint
18	2	IS	[0..1]	0009	00145	Ambulatory Status	O	
19		CE	[0..1]	0171	00129	Citizenship	O	
20		CE	[0..1]	0296	00118	Primary Language	O	
21	2	IS	[0..1]	0220	00742	Living Arrangement	O	
22		CE	[0..1]	0215	00743	Publicity Code	O	
23	1	ID	[0..1]	0136	00744	Protection Indicator	O	
24	2	IS	[0..1]	0231	00745	Student Indicator	O	
25		CE	[0..1]	0006	00120	Religion	O	
26		XPN	[0..1]		00109	Mother's Maiden Name	O	
27		CE	[0..1]	0212	00739	Nationality	O	
28		CE	[0..1]	0189	00125	Ethnic Group	O	
29		CE	[0..1]	0222	00747	Contact Reason	O	
30		XPN	[0..1]		00748	Contact Person's Name	O	
31		XTN	[0..1]		00749	Contact Person's Telephone Number	O	
32		XAD	[0..1]		00750	Contact Person's Address	O	
33		CX	[0..1]		00751	Next of Kin/Associated Party's Identifiers	O	
34	2	IS	[0..1]	0311	00752	Job Status	O	
35		CE	[0..1]	0005	00113	Race	O	
36	2	IS	[0..1]	0295	00753	Handicap	O	
37	16	ST	[0..1]		00754	Contact Person Social Security Number	O	
38		ST	[0..1]		01905	Next of Kin Birth Place	O	
39	2	IS	[0..1]	0099	00146	VIP Indicator	O	

NK1 field definitions

NK1-1 Set ID - NK1 (SI) 00190

Definition: This field contains the number that identifies this transaction. For the first occurrence of the segment, the sequence number shall be one, for the second occurrence, the sequence number shall be two, etc.

NK1-2 Name (XPN) 00191

Definition: This field contains the name of the next of kin or associated party. Multiple names for the same person are allowed, but the legal name must be sent in the first sequence. Refer to HL7 Table 0200 - Name Type for valid values.

NK1-3 Relationship (CE) 00192

Definition: This field contains the actual personal relationship that the next of kin/associated party has to the patient. Refer to User-defined Table 0063 - Relationship for suggested values.

NK1-4 Address (XAD) 00193

Definition: This field contains the address of the next of kin/associated party. Multiple addresses are allowed for the same person. The mailing address must be sent in the first sequence. If the mailing address is not sent, then the repeat delimiter must be sent in the first sequence.

NK1-5 Phone Number (XTN) 00194

Definition: This field contains the telephone number of the next of kin/associated party. Multiple phone numbers are allowed for the same person. The primary telephone number must be sent in the first sequence. If the primary telephone number is not sent, then the repeat delimiter must be sent in the first sequence. Refer to HL7 Table 0201 - Telecommunication Use Code and HL7 Table 0202 - Telecommunication Equipment Type for valid values.

NK1-6 Business Phone Number (XTN) 00195

Definition: This field contains the business telephone number of the next of kin/associated party. Multiple phone numbers are allowed for the same person. The primary business telephone number must be sent in the first sequence. If the primary telephone number is not sent, then the repeat delimiter must be sent in the first sequence. Refer to HL7 Table 0201 - Telecommunication Use Code and HL7 Table 0202 - Telecommunication Equipment Type for valid values.

NK1-15 Administrative Sex (IS) 00111

Definition: This is the sex of the next of kin.

NK1-16 Date/Time of Birth (TS) 00110

Definition: This is the data of birth of the next of kin.

NTE—Note Segment

The NTE segment is used for sending notes and comments. It is used in relation to OBX in the VXU and RSP. It is also used in ADT in relation to various segments.

Table 5-12 Note Segment (NTE)

SEQ	LEN	Data Type	Cardinality	Value Set	ITEM #	ELEMENT NAME	Usage	Comment
1	4	SI	[0..1]		00096	Set ID - NTE	O	
2	8	ID	[0..1]	0105	00097	Source of Comment	O	
3		FT	[1..1]		00098	Comment	R	
4		CE	[0..1]	0364	01318	Comment Type	O	

NTE field definitions

NTE-3 Comment (FT) 00098

Definition: This field contains the comment contained in the segment.

OBX—Observation Result Segment

The observation result segment has many uses. It carries observations about the object of its parent segment. In the VXU/RSP it is associated with the RXA or immunization record. The basic format is a question (OBX-3) and an answer (OBX-5).

Table 5-13 Observation Segment (OBX)

SEQ	LEN	Data Type	Cardinality	Value Sets	ITEM#	ELEMENT NAME	Usage	Comment
1	4	SI	[1..1]		00569	Set ID – OBX	R	
2	2	ID	[1..1]	0125	00570	Value Type	R	CE, NM, ST, DT, or TS
3		CE	[1..1]		00571	Observation Identifier	R	This indicates what this observation refers to. It poses the question that is answered by OBX-5.
4	20	ST	[1..1]		00572	Observation Sub-ID	RE	
5		varies[18]	[1..1]		00573	Observation Value	R	This is the observation value and answers the question posed by OBX-3
6		CE	[0..1]		00574	Units	CE	If the observation in OBX-5 requires an indication of the units, they are placed here.
7	60	ST	[0..1]		00575	References Range	O	
8	5	IS	[0..1]	0078	00576	Abnormal Flags	O	
9	5	NM	[0..1]		00577	Probability	O	
10	2	ID	[0..1]	0080	00578	Nature of Abnormal Test	O	
11	1	ID	[1..1]	0085	00579	Observation Result Status	R	Constrain to F
12		TS	[0..1]		00580	Effective Date of Reference Range Values	O	

[18] The length of the observation field is variable, depending upon value type. See *OBX-2 value type*.

SEQ	LEN	Data Type	Cardinality	Value Sets	ITEM#	ELEMENT NAME	Usage	Comment
13	20	ST	[0..1]		00581	User Defined Access Checks	O	
14		TS	[1..1]		00582	Date/Time of the Observation	R	
15		CE	[0..1]		00583	Producer's Reference	O	
16		XCN	[0..1]		00584	Responsible Observer	O	
17		CE	[0..1]		00936	Observation Method	O	
18		EI	[0..1]		01479	Equipment Instance Identifier	O	
19		TS	[0..1]		01480	Date/Time of the Analysis	O	
20			[0..1]			Reserved for harmonization with V2.6	O	
21			[0..1]			Reserved for harmonization with V2.6	O	
22			[0..1]			Reserved for harmonization with V2.6	O	
23		XON	[0..1]		02283	Performing Organization Name	O	
24		XAD	[0..1]		02284	Performing Organization Address	O	

SEQ	LEN	Data Type	Cardinality	Value Sets	ITEM#	ELEMENT NAME	Usage	Comment
25		XCN	[0..1]		02285	Performing Organization Medical Director	O	

OBX field definitions

OBX-1 Set ID - OBX (SI) 00569

Definition: This field contains the sequence number. The first instance shall be set to 1 and each subsequent instance shall be the next number in sequence.

OBX-2 Value Type (ID) 00570

Definition: This field contains the format of the observation value in OBX. If the value is CE then the result must be a coded entry.

OBX-3 Observation Identifier (CE) 00571

Definition: This field contains a unique identifier for the observation. The format is that of the Coded Element (CE). Example: |30963-3^Vaccine purchased with^LN|.

In most systems the identifier will **point** to a master observation table that will provide other attributes of the observation that may be used by the receiving system to process the observations it receives. This may be thought of as a question that the observation answers. In the example above, the question is “how was this immunization paid for” The answer in OBX-5 could be “Public Funding”.

The 2.3.1 Implementation Guide used suffixes on the first sequence in OBX-3 to group related observations. For instance, reporting a VIS publication date and VIS receipt date each added a suffix of one LOINC code to a second LOINC code when recording VIS dates for a component vaccine. (38890-0&29768-9^DATE VACCINE INFORMATION STATEMENT PUBLISHED^LN) This is no longer acceptable. Grouping of related observations will be accomplished using Observation sub-id (OBX-4).

OBX-4 Observation Sub-ID (ST) 00572

Definition: This field is used to group related observations by setting the value to the same number. For example, recording VIS date and VIS receipt date for a combination vaccination requires 6 OBX segments. One OBX would indicate the vaccine group. It would have a pair of OBX indicating the VIS publication date and the VIS receipt date. These would have the same OBX-4 value to allow them to be linked. The second set of three would have another OBX-4 value common to each of them.

This field may be used to link related components of an observation. Each component of the observation would share an Observation sub-id.

For example:

OBX|1|LN|^observation 1 part 1^^^^^|1|…

OBX|2|LN|^ observation 1 part 2^^^^^|1|…

OBX|3|DT|^a different observation^^^^^|2|…

Example:

OBX|1|CE|38890-0^COMPONENT VACCINE TYPE^LN|1|45^HEP B, NOS^CVX|||||F|<CR>

OBX|2|TS|29768-9^DATE VACCINE INFORMATION STATEMENT PUBLISHED^LN|1|20010711|||||F|<CR>

OBX|3|TS|29769-7^DATE VACCINE INFORMATION STATEMENT PRESENTED^LN|1|19901207|||||F|<CR>

OBX|4|CE|38890-0^COMPONENT VACCINE TYPE^LN|2|17^HIB,NOS^CVX|||||F|<CR>

OBX|5|TS|29768-9^DATE VACCINE INFORMATION STATEMENT PUBLISHED^LN|2|19981216|||||F|<CR>

OBX|6|TS|29769-7^DATE VACCINE INFORMATION STATEMENT PRESENTED^LN|2|19901207|||||F|<CR>

OBX-5 Observation Value (varies) 00573

Definition: This field contains the value observed by the observation producer. OBX-2-value type contains the data type for this field according to which observation value is formatted.

This field contains the value of OBX-3-observation identifier of the same segment. Depending upon the observation, the data type may be a number (e.g., dose number), a coded answer (e.g., a vaccine), or a date/time (the date/time that the VIS was given to the client/parent). An observation value is always represented as the data type specified in OBX-2-value type of the same segment. Whether numeric or short text, the answer shall be recorded in ASCII text.

Coded values

When an OBX segment contains values of CE data types, the observations are stored as a combination of codes and/or text.

OBX-6 Units (CE) 00574

Definition: This shall be the units for the value in OBX-5. The value shall be from the ISO+ list of units.

OBX-11 Observation Result Status (ID) 00579

Definition: This field contains the observation result status. The expected value is F or final.

OBX-14 Date/Time of the Observation (TS) 00582

Definition: Records the time of the observation. It is the physiologically relevant date-time or the closest approximation to that date-time of the observation.

ORC—Order Request Segment

The Common Order segment (ORC) is used to transmit fields that are common to all orders (all types of services that are requested). While not all immunizations recorded in an immunization message are able to be associated with an order, each RXA must be associated with one ORC, based on HL7 2.5.1 standard.

Table 5-14 Common Order Segment (ORC)

SEQ	LEN	Data Type	Cardinality	Value Set	ITEM#	ELEMENT NAME	Usage	Comment
1	2	ID	[1..1]	0119	00215	Order Control	R	use RE
2		EI	[0..1]		00216	Placer Order Number	RE	See Guidance below.
3		EI	[0..1]		00217	Filler Order Number	R	See Guidance below.
4		EI	[0..1]		00218	Placer Group Number	O	
5	2	ID	[0..1]	0038	00219	Order Status	O	
6	1	ID	[0..1]	0121	00220	Response Flag	O	
7		TQ	[0..1]		00221	Quantity/Timing	X	
8		EIP	[0..1]		00222	Parent	O	
9		TS	[0..1]		00223	Date/Time of Transaction	O	
10		XCN	[0..1]		00224	Entered By	RE	This is the person that entered this immunization record into the system.
11		XCN	[0..1]		00225	Verified By	O	
12		XCN	[0..1]		00226	Ordering Provider	RE	This shall be the provider ordering the immunization. It is expected to be empty if the immunization record is transcribed from a historical record.
13		PL	[0..1]		00227	Enterer's Location	O	
14		XTN	[0..1]		00228	Call Back Phone Number	O	
15		TS	[0..1]		00229	Order Effective Date/Time	O	

SEQ	LEN	Data Type	Cardinality	Value Set	ITEM#	ELEMENT NAME	Usage	Comment
16		CE	[0..1]		00230	Order Control Code Reason	O	
17		CE	[0..1]		00231	Entering Organization	O	This is the provider organization that entered this record/order.
18		CE	[0..1]		00232	Entering Device	O	
19		XCN	[0..1]		00233	Action By	O	
20		CE	[0..1]	0339	01310	Advanced Beneficiary Notice Code	O	
21		XON	[0..1]		01311	Ordering Facility Name	O	
22		XAD	[0..1]		01312	Ordering Facility Address	O	
23		XTN	[0..1]		01313	Ordering Facility Phone Number	O	
24		XAD	[0..1]		01314	Ordering Provider Address	O	
25		CWE	[0..1]		01473	Order Status Modifier	O	
26		CWE	[0..1]	0552	01641	Advanced Beneficiary Notice Override Reason	O	
27		TS	[0..1]		01642	Filler's Expected Availability Date/Time	O	
28		CWE	[0..1]	0177	00615	Confidentiality Code	O	
29		CWE	[0..1]	0482	01643	Order Type	O	
30		CNE	[0..1]	0483	01644	Enterer Authorization Mode	O	

SEQ	LEN	Data Type	Cardinality	Value Set	ITEM#	ELEMENT NAME	Usage	Comment
31		CWE	[0..1]		02286	Parent Universal Service Identifier	O	

ORC field definitions

ORC-1 Order Control (ID) 00215

Definition: Determines the function of the order segment.

The value for VXU and RSP shall be RE.

Placer Order Number (ORC-2) and Filler Order Number (ORC-3) are unique identifiers from the system where an order was placed and where the order was filled. They were originally designed for managing lab orders. These fields have a usage status of Conditional in Version 2.5.1. The condition for each is that they must be present in either the OBR or ORC of a message. There has been confusion about usage for these fields. The Orders and Observations workgroup has addressed this confusion. In the context that ORC will be used in Immunization messaging either ORC-2 or ORC-3 must be populated. They may both be populated.

In the immunization context, it is not common to have one system placing and one filling an immunization order. In some cases neither is known. The use case that these have supported is to allow a system that sent an immunization record to another system to identify an immunization that needs to be changed using the Filler Order Number it had sent.

This Guide specifies that Placer Order Number is RE (required, but may be empty). The Filler Order Number SHALL be the unique immunization id of the sending system.

ORC-2 Placer Order Number (EI) 00216

The placer order number is used to uniquely identify this order among all orders sent by a provider organization.

ORC-2 is a system identifier assigned by the placer software application. The Placer Order Number and the Filler Order Number are essentially foreign keys exchanged between applications for uniquely identifying orders and the associated results across applications.

In the case where the ordering provider organization is not known, the sending system may leave this field empty.

ORC-3 Filler Order Number (EI) 00217

The filler order number is used to uniquely identify this order among all orders sent by a provider organization that filled the order.

This shall be the unique identifier of the sending system in a given transaction. In the case where system A sends the record to system B and system B then forwards to system C, system B will send its' own unique identifier.

Use of this foreign key will allow the initiating system to accurately identify the previously sent immunization record, facilitating update or deletion of that record.

In the case where a historic immunization is being recorded (i.e. from an immunization card), the sending system SHALL assign an identifier as if it were an immunization administered by a provider associated with the provider organization owning the sending system.

In the case where an RXA is conveying information about an immunization which was not given (e.g. refusal) the filler order number shall be 9999.

Note that the receiving system will need to store this value in addition to it's own internal id in order for this to be used.

ORC-10 Entered By (XCN) 00224

Definition: This identifies the individual that entered this particular order. It may be used in conjunction with an RXA to indicate who recorded a particular immunization.

ORC-12 Ordering Provider (XCN) 00226

Definition: This field contains the identity of the person who is responsible for creating the request (i.e., ordering physician). In the case where this segment is associated with a historic immunization record and the ordering provider is not known, then this field should not be populated.

ORC-17 Entering Organization (CE) 00231

Definition: This field identifies the organization that the enterer belonged to at the time he/she enters/maintains the order, such as medical group or department. The person who entered the request is defined in ORC-10 -entered by.

ORC-21 Ordering Facility Name (XON) 01311

Definition: This field contains the name of the facility placing the order. It is the organization sub-unit that ordered the immunization. (i.e. the clinic)

ORC-22 Ordering Facility Address (XAD) 01312

Definition: This field contains the address of the facility requesting the order.

ORC-23 Ordering Facility Phone Number (XTN) 01312

Definition: This field contains the phone number of the facility requesting the order.

ORC-24 Ordering Provider Address (XAD) 01314

Definition: This field contains the address of the care provider requesting the order.

ORC –28 Confidentiality Code (CWE) 00615

This field allows a system to indicate if special privacy rules apply to the RXA that is associated with this ORC. For instance, if a state had special rules about who may see records for HPV vaccinations, then this field could convey that. The recommended value to use in this case is R for restricted.

If this field is populated, it indicates the active choice of the patient or responsible person. In other words, if the value indicates that the information must be protected, the person has stated that it must be protected. An empty field indicates that the client has not actively specified the way they want this data to be handled. Local implementation guides should describe the local usage of this field and value.

PD1—Patient Demographic Segment

The Patient Demographic Segment contains patient demographic information that may change from time to time. There are three primary uses for in Immunization Messages. These include indicating whether the person wants his/her data protected, whether the person wants to receive recall/reminder notices and the person's current status in the registry.

Table 5-15-Patient Demographic Segment (PD1)

SEQ	LEN	Data Type	Cardinality	Value Set	Item #	ELEMENT NAME	Usage	Comment
1	1	ST	[0..1]	0223	00755	Living Dependency	O	Null
2	4	ST	[0..1]	0220	00742	Living Arrangement	O	Null
3		HD	[0..1]		00756	Patient Primary Facility	O	
4		HD	[0..1]		00757	Patient Primary Care Provider Name & ID No.	O	
5		HD	[0..1]	0231	00745	Student Indicator	O	Null
6		HD	[0..1]	0295	00753	Handicap	O	Null
7		TS	[0..1]	0315	00759	Living Will Code	O	Null
8	40	ST	[0..1]	0316	00760	Organ Donor Code	O	Null
9	15	MSG	[0..1]	0136	00761	Separate Bill	O	Null
10	20	ST	[0..1]		00762	Duplicate Patient	O	
11	3	PT	[0..1]	0215	00743	Publicity Code	RE	
12	60	ID	[0..1]	0136	00744	Protection Indicator	RE	
13	15	DT	[0..1]		01566	Protection Indicator Effective Date	CE	If protection indicator is valued, then this field should be valued.
14	180	ST	[0..1]		01567	Place of Worship	O	Null
15	2	ID	[0..1]	0435	01568	Advance Directive Code	O	Null
16	2	ID	[0..1]	0441	01569	Immunization Registry Status	RE	
17	3	DT	[0..1]		01570	Immunization Registry Status Effective Date	CE	If the registry status field is filled, then this should be valued.
18	16	DT	[0..1]		01571	Publicity Code Effective Date	CE	If the publicity code field is filled then this field should be valued.

SEQ	LEN	Data Type	Cardinality	Value Set	Item #	ELEMENT NAME	Usage	Comment
19		CE	[0..1]	0140	01572	Military Branch	O	Null
20	20	ID	[0..1]	0141	00486	Military Rank/Grade	O	Null
21		EI	[0..1]	0142	01573	Military Status	O	Null

PD1 field definitions

PD1-3 Patient Primary Facility (XON) 00756

Definition: This field contains the name and identifier that specifies the “primary care” healthcare facility selected by the patient. Use may be specified locally.

PD1-4 Patient Primary Care Provider Name & ID No. (XCN) 00757

Definition: Identifier for primary care provider. Use may be specified locally.

PD1-11 Publicity Code (CE) 00743

Definition: This field contains a user-defined code indicating what level of publicity is allowed (e.g., No Publicity, Family Only) for the patient. In the context of immunization messages, this refers to how a person wishes to be contacted in a reminder or recall situation. Refer to User-defined Table 0215 - Publicity Code for suggested values.

PD1-12 Protection Indicator (ID) 00744

Definition: This field identifies whether a person’s information may be shared with others[19]. Specific protection policies are a local consideration (opt in or opt out, for instance). This field conveys the current state in the sending system.

The protection state must be actively determined by the clinician. If it is not actively determined, then the protection indicator shall be empty.

There are 3 states:

[19] Local policies determine how data are protected. In general, it indicates who may view the client’s data. It may be as narrow as just the provider that entered the information.

Protection State	Code
Yes, protect the data. Client (or guardian) has indicated that the information shall be protected. (Do not share data)	Y
No, it is not necessary to protect data from other clinicians. Client (or guardian) has indicated that the information does not need to be protected. (Sharing is OK)	N
No determination has been made regarding client's (or guardian's) wishes regarding information sharing	PD1-12 is empty.

Notes on use of Y for Protection Indicator in 2.5.1 Guide vs. earlier Guides.

Note that the previous Implementation Guide stated that Y meant that a person's information could be shared. This was an incorrect interpretation of the use of this field. The meaning now aligns with the definition of HL7. That is, Y means data must be protected. Existing systems that use the old meaning will need to determine how they will send the correct value in a 2.5.1 message.

Note that the value sent in a message that is based on the 2.3.1 or 2.4 version of the HL7 standard shall continue to follow the old guidance. That is, Y means sharing is allowed and N means sharing is not allowed.

Note on Null and Empty in HL7

See notes on null and empty fields in Chapter 3.

PD1-13 Protection Indicator Effective Date (DT) 01566

Definition: This field indicates the effective date for PD1-12 - Protection Indicator.

PD1-16 Immunization Registry Status (IS) 01569

Definition: This field identifies the current status of the patient in relation to the sending provider organization.. Refer to User-defined Table 0441 - Immunization Registry Status for suggested values.

This field captures whether the sending provider organization considers this an active patient. There are several classes of responsibility. The status may be different between the sending and receiving systems. For instance, a person may no longer be active with a provider organization, but may still be active in the public health jurisdiction, which has the Immunization Information System (IIS). In this case the provider organization would indicate that the person was inactive in their system using this field in a message from them. The IIS would indicate that person was active in a message from the IIS.

PD1-17 Immunization Registry Status Effective Date (DT) 01570

Definition: This field indicates the effective date for the registry status reported in PD1-16 - Immunization Registry Status.

PD1-18 Publicity Code Effective Date (DT) 01571

Definition: This is the effective date for PD1-11 - Publicity Code.

PID—Patient Identifier Segment

The PID is used by all applications as the primary means of communicating patient identification information. This segment contains permanent patient identifying and demographic information that, for the most part, is not likely to change frequently.

Table 5-16-Patient Identifier Segment (PID)

SEQ	LEN	Data Type	Cardinality	Value Set	ITEM#	Element Name	Usage	Constraint
1	4	SI	[1..1]		00104	Set ID - PID	RE	
2		CX	[0..1]		00105	Patient ID	X	null
3		CX	[1..*]		00106	Patient Identifier List	R	
4		CX	[0..1]		00107	Alternate Patient ID - 00106	X	null
5		XPN	[1..*]		00108	Patient Name	R	the first repetition shall contain the legal name. Multiple given names or initials are separated by spaces.
6		XPN	[0..1]		00109	Mother's Maiden Name	RE	
7		TS	[1..1]		00110	Date/Time of Birth	R	Required, must have month, day and year.
8	1	IS	[0..1]	0001	00111	Administrative Sex	RE	M= male, F = female, U = not determined/unspecified/unknown.
9		XPN	[0..1]		00112	Patient Alias	X	This field should not be used. It was supported in earlier implementations.
10		CE	[0..*]	0005	00113	Race	RE	The first triplet is to be used for the alpha code. The second triplet of the CE data type for race (alternate identifier, alternate text, and name of alternate coding

SEQ	LEN	Data Type	Cardinality	Value Set	ITEM#	Element Name	Usage	Constraint
								system) should be used for governmentally assigned numeric codes (####-#).
11		XAD	[0..*]		00114	Patient Address	RE	The first repetition should be the primary address.
12	4	IS	[0..1]	0289	00115	County Code	X	Null. County belongs in address field.
13		XTN	[0..*]		00116	Phone Number - Home	RE	The first instance shall be the primary phone number. Only one item is allowed per repetition.
14		XTN	[0..1]		00117	Phone Number - Business	O	
15		CE	[0..1]	0296	00118	Primary Language	O	Use ISO 639.
16		CE	[0..1]	0002	00119	Marital Status	O	
17		CE	[0..1]	0006	00120	Religion	O	
18		CX	[0..1]		00121	Patient Account Number	O	
19	16	ST	[0..1]		00122	SSN Number - Patient	X	
20		DLN	[0..1]		00123	Driver's License Number - Patient	X	
21		CX	[0..1]		00124	Mother's Identifier	X	
22		CE	[0..1]	0189	00125	Ethnic Group	RE	First triplet shall contain H,N,U if populated. Second triplet shall contain government issued code from table xxx, if populated. If both are populated, they must match logically.

SEQ	LEN	Data Type	Cardinality	Value Set	ITEM#	Element Name	Usage	Constraint
23	60	ST	[0..1]		00126	Birth Place	O	Use may be specified locally.
24	1	ID	[0..1]	0136	00127	Multiple Birth Indicator	RE	The acceptable values are Y and N. If the status is undetermined, then field shall be empty.
25	2	NM	[0..1]		00128	Birth Order	CE	If Multiple Birth Indicator is populated with Y, then this field should contain the number indicating the person's birth order, with 1 for the first child born and 2 for the second.
26		CE	[0..1]	0171	00129	Citizenship	O	
27		CE	[0..1]	0172	00130	Veterans Military Status	O	
28		CE	[0..1]	0212	00739	Nationality	O	
29		TS	[0..1]		00740	Patient Death Date and Time	RE	
30	1	ID	[0..1]	0136	00741	Patient Death Indicator	CE	If patient death date is populated, then this field should be populated.
31	1	ID	[0..1]	0136	01535	Identity Unknown Indicator	O	
32	20	IS	[0..1]	0445	01536	Identity Reliability Code	O	
33		TS	[0..1]		01537	Last Update Date/Time	O	May be locally specified.
34		HD	[0..1]		01538	Last Update Facility	O	Use is locally specified.
35		CE	[0..1]	0446	01539	Species Code	O	
36		CE	[0..1]	0447	01540	Breed Code	O	

SEQ	LEN	Data Type	Cardinality	Value Set	ITEM#	Element Name	Usage	Constraint
37	80	ST	[0..1]		01541	Strain	O	
38		CE	[0..1]	0429	01542	Production Class Code	O	
39		CE	[0..1]	0171	01840	Tribal Citizenship	O	

PID field definitions

PID-1 Set ID - PID (SI) 00104

Definition: This field contains the number that identifies this transaction. For the first occurrence of the segment, the sequence number shall be one, for the second occurrence, the sequence number shall be two, etc.

PID-3 Patient Identifier List (CX) 00106

Definition: This field contains the list of identifiers (one or more) used by the healthcare facility to uniquely identify a patient (e.g., medical record number, billing number, birth registry, national unique individual identifier, etc.).

PID-5 Patient Name (XPN) 00108

Definition: This field contains the names of the patient, The primary or legal name of the patient is reported first. Therefore, the name type code in this field should be “L - Legal”. Refer to HL7 Table 0200 - Name Type for valid values.

PID-6 Mother's Maiden Name (XPN) 00109

Definition: This field contains the family name under which the mother was born (i.e., before marriage). It is used to distinguish between patients with the same last name.

PID-7 Date/Time of Birth (TS) 00110

Definition: This field contains the patient’s date and time of birth.

PID-8 Administrative Sex (IS) 00111

Definition: This field contains the patient's sex. Refer to User-defined Table 0001 - Administrative Sex for suggested values.

PID-9 Patient Alias (XPN) 00112

Not anticipated for use in immunization messages.

This field was used in the 2.3.1 Implementation Guide. Alias names should be placed in the patient name field.

PID-10 Race (CE) 00113

Definition: This field refers to the patient's race. Refer to User-defined Table 0005 - Race for suggested values. The second triplet of the CE data type for race (alternate identifier, alternate text, and name of alternate coding system) is reserved for governmentally assigned codes.

PID-11 Patient Address (XAD) 00114

Definition: This field contains the mailing address of the patient. Address type codes are defined by HL7 Table 0190 - Address Type. Multiple addresses for the same person may be sent in the following sequence: The primary mailing address must be sent first in the sequence (for backward compatibility); if the mailing address is not sent, then a repeat delimiter must be sent in the first sequence.

This field is used for any type of address that is meaningfully associated with the client/patient. For instance Birth State is the state of the address of the birthing location, address type = BDL. A person's address may be sent in this field or in the NK1 segment with a relationship code indicating Self. Local implementations should clarify how these addresses will be handled.

PID-12 County Code (IS) 00115

Not anticipated for use in immunization messages. County code belongs in the Address field (PID-11).

PID-13 Phone Number - Home (XTN) 00116

Definition: This field contains the patient's personal phone numbers. All personal phone numbers for the patient are sent in the following sequence. The first sequence is considered the primary number (for backward compatibility). If the primary number is not sent, then a repeat delimiter is sent in the first sequence. Each type of telecommunication shall be in its' own repetition. For example, if a person has a phone number and an email address, they shall each have a repetition. Refer to HL7 Table 0201 - Telecommunication Use Code and HL7 Table 0202 - Telecommunication Equipment Type for valid values.

PID-14 Phone Number - Business (XTN) 00117

Definition: This field contains the patient's business telephone numbers. All business numbers for the patient are sent in the following sequence. The first sequence is considered the patient's primary business phone number (for backward compatibility). If the primary business phone number is not sent, then a repeat delimiter must be sent in the first sequence. Refer to HL7 Table 0201 - Telecommunication Use Code and HL7 Table 0202 - Telecommunication Equipment Type for valid values.

PID-15 Primary Language (CE) 00118

Definition: This field contains the patient's primary language. HL7 recommends using ISO table 639 as the suggested values in User-defined Table 0296 - Primary Language.

PID-22 Ethnic Group (CE) 00125

Definition: This field further defines the patient's ancestry. Refer to User-defined Table 0189 - Ethnic Group. The second triplet of the CE data type for ethnic group (alternate identifier, alternate text, and name of alternate coding system) is reserved for governmentally assigned codes.

PID-24 Multiple Birth Indicator (ID) 00127

Definition: This field indicates whether the patient was part of a multiple birth. Refer to HL7 Table 0136 - Yes/No Indicator for valid values.

Y the patient was part of a multiple birth

N the patient was a single birth

Empty field multiple birth status is undetermined.

PID-25 Birth Order (NM) 00128

Definition: When a patient was part of a multiple birth, a value (number) indicating the patient's birth order is entered in this field. If PID-24 is populated, then this field should be populated.

PID-29 Patient Death Date and Time (TS) 00740

Definition: This field contains the date and time at which the patient death occurred.

PID-30 Patient Death Indicator (ID) 00741

Definition: This field indicates whether the patient is deceased. Refer to HL7 Table 0136 - Yes/no Indicator for valid values.

Y	the patient is deceased
N	the patient is not deceased
Empty	status is undetermined

PID-33 Last Update Date/Time (TS) 01537

Definition: This field contains the last update date and time for the patient's/person's identifying and demographic data, as defined in the PID segment.

PID-34 Last Update Facility (HD) 01538

Definition: This field identifies the facility of the last update to a patient's/person's identifying and demographic data, as defined in the PID segment.

PV1—Patient Visit Segment

The PV1 segment is used to convey visit specific information. The primary use in immunization messages is to carry information about the client's eligibility status.

Table 5-17-Patient Visit (PV1)

SEQ	LEN	Data Type	Cardinality	Value Set	ITEM#	ELEMENT NAME	Usage	Constraint
1	4	SI	[0..1]		00131	Set ID - PV1	O	If populated, this should be 1.
2	1	IS	[1..1]	0004	00132	Patient Class	R	R
3		PL	[0..1]		00133	Assigned Patient Location	O	
4	2	IS	[0..1]	0007	00134	Admission Type	O	
5		CX	[0..1]		00135	Pre-admit Number	O	
6		PL	[0..1]		00136	Prior Patient Location	O	
7		XCN	[0..1]	0010	00137	Attending Doctor	O	
8		XCN	[0..1]	0010	00138	Referring Doctor	O	
9		XCN	[0..1]	0010	00139	Consulting Doctor	O	
10	3	IS	[0..1]	0069	00140	Hospital Service	O	
11		PL	[0..1]		00141	Temporary Location	O	
12	2	IS	[0..1]	0087	00142	Preadmit Test Indicator	O	
13	2	IS	[0..1]	0092	00143	Re-admission Indicator	O	
14	6	IS	[0..1]	0023	00144	Admit Source	O	
15	2	IS	[0..1]	0009	00145	Ambulatory Status	O	
16	2	IS	[0..1]	0099	00146	VIP Indicator	O	
17		XCN	[0..1]	0010	00147	Admitting Doctor	O	
18	2	IS	[0..1]	0018	00148	Patient Type	O	
19		CX	[0..1]		00149	Visit Number	O	
20		FC	[1..*]	0064	00150	Financial Class	R	

21	2	IS	[0..1]	0032	00151	Charge Price Indicator	O	
22	2	IS	[0..1]	0045	00152	Courtesy Code	O	
23	2	IS	[0..1]	0046	00153	Credit Rating	O	
24	2	IS	[0..1]	0044	00154	Contract Code	O	
25	8	DT	[0..1]		00155	Contract Effective Date	O	
26	12	NM	[0..1]		00156	Contract Amount	O	
27	3	NM	[0..1]		00157	Contract Period	O	
28	2	IS	[0..1]	0073	00158	Interest Code	O	
29	4	IS	[0..1]	0110	00159	Transfer to Bad Debt Code	O	
30	8	DT	[0..1]		00160	Transfer to Bad Debt Date	O	
31	10	IS	[0..1]	0021	00161	Bad Debt Agency Code	O	
32	12	NM	[0..1]		00162	Bad Debt Transfer Amount	O	
33	12	NM	[0..1]		00163	Bad Debt Recovery Amount	O	
34	1	IS	[0..1]	0111	00164	Delete Account Indicator	O	
35	8	DT	[0..1]		00165	Delete Account Date	O	
36	3	IS	[0..1]	0112	00166	Discharge Disposition	O	
37		DLD	[0..1]	0113	00167	Discharged to Location	O	
38		CE	[0..1]	0114	00168	Diet Type	O	

39	2	IS	[0..1]	0115	00169	Servicing Facility	O	
40	1	IS	[0..1]	0116	00170	Bed Status	O	
41	2	IS	[0..1]	0117	00171	Account Status	O	
42		PL	[0..1]		00172	Pending Location	O	
43		PL	[0..1]		00173	Prior Temporary Location	O	
44		TS	[0..1]		00174	Admit Date/Time	O	
45		TS	[0..1]		00175	Discharge Date/Time	O	
46	12	NM	[0..1]		00176	Current Patient Balance	O	
47	12	NM	[0..1]		00177	Total Charges	O	
48	12	NM	[0..1]		00178	Total Adjustments	O	
49	12	NM	[0..1]		00179	Total Payments	O	
50		CX	[0..1]	0203	00180	Alternate Visit ID	O	
51	1	IS	[0..1]	0326	01226	Visit Indicator	O	
52		XCN	[0..1]	0010	01274	Other Healthcare Provider	O	

PV1 field definitions

PV1-2 Patient Class (IS) 00132

Definition: This field is used by systems to categorize patients by site. It shall be constrained to R.

PV1-20 Financial Class (FC) 00150

Definition: This field contains the financial class(es) assigned to the patient. It reflects the current eligibility status. For children, this will include the eligibility status for the Vaccines for Children program (VFC). This field has 2 components: financial class and date. The date is the date that the status was assessed. Refer to User-defined Table 0064 - Financial Class for suggested values.

This field does not indicate how each immunization was paid for on this visit. That information may be carried in an OBX segment associated with each RXA segment.

QAK—Query Acknowledgement Segment

Table 5-18-Query Acknowledgement Segment

SEQ	LEN	Data Type	Cardinality	Value set	ITEM#	ELEMENT NAME	Usage	Comment
1	32	ST	[1..1]		00696	Query Tag	R	
2	2	ID	[0..1]	0208	00708	Query Response Status	O	
3		CE	[0..1]	0471	01375	Message Query Name	O	
4	10	NM	[0..1]		01434	Hit Count	O	
5	10	NM	[0..1]		01622	This payload	O	
6	10	NM	[0..1]		01623	Hits remaining	O	

QAK field definitions

QAK-1 Query Tag (ST) 00696

Definition: This field contains the value sent in QPD-2 (query tag) by the initiating system, and will be used to match response messages to the originating query. The responding system is required to echo it back as the first field in the query acknowledgement segment(QAK).

QAK-2 Query Response Status (ID) 00708

Definition: This field allows the responding system to return a precise response status. It is especially useful in the case where no data is found that matches the query parameters, but where there is also no error. It is defined with HL7 Table 0208 - Query Response Status.

QAK-3 Message Query Name (CE) 01375

Definition: This field contains the name of the query. This shall mirror the QPD-1 (Message Query Name) found in the query message that is being responded to.

QPD – Query Parameter Definition

The QPD segment defines the parameters of the query.

Table 5-19-Query Parameter Definition (QPD)

SEQ	LEN	Data Type	Cardinality	Value Set	ITEM#	ELEMENT NAME	Usage	Comment
1		CE	[1..1]	0471	01375	Message Query Name	R	
2	32	ST			00696	Query Tag	R	Generated by the initiating system.
3-n		varies			01435	User Parameters (in successive fields)	R	The specification of this sequence is found in the profile specific to the use case.

QPD field definitions

QPD-1 Message Query Name (CE) 01375

Definition: This field contains the name of the query. These names are assigned by the function-specific chapters of this specification. It is one to one with the conformance statement for this query name, and it is in fact an identifier for that conformance statement.

QPD-2 Query Tag (ST) 00696

Definition: This field must be valued by the initiating system to identify the query, and may be used to match response messages to the originating query.

The responding system is required to echo it back as the first field in the query acknowledgement segment (QAK).

This field differs from *MSA-2-Message control ID* in that its value remains constant for each message (i.e. all continuation messages) associated with the query, whereas *MSA-2-Message control ID* may vary with each continuation message, since it is associated with each individual message, not the query as a whole.

QPD-3 User Parameters (Varies) 01435

Definition: These successive parameter fields hold the values that the Client passes to the Server.

The client data is presented as a sequence of HL7 fields. Beginning at *QPD-3-User parameters*, the remaining fields of the QPD segment carry user parameter data. Each QPD user parameter field corresponds to one parameter defined in the Conformance Statement, where each name, type, optionality, and repetition of each parameter has been specified. While these parameters are understood to be usually "and-ed" together, the user must inspect the required Conformance Statement to properly understand each. Except in the QSC variant, the parameter names do not need to be stated in the query; they are understood to be positional based on the Conformance Statement.

Each parameter field may be specified in the Conformance Statement to be of any single data type, including the complex QIP and QSC types. Parameter fields in the QPD segment appear in the same order as in the Conformance Statement.

RCP – Response Control Parameter Segment

The RCP segment is used to restrict the amount of data that should be returned in response to query. It lists the segments to be returned.

Table 5-20-Response Control Parameter

SEQ	LEN	Data Type	Cardinality	Value set	ITEM#	ELEMENT NAME	Usage	Comments
1	1	ID	[0..1]	0091	00027	Query Priority	O	Constrain to null or I. Immediate priority is expected.
2		CQ	[0..1]	0126	00031	Quantity Limited Request	O	This field may contain a maximum number of records that may be returned. The first component contains the count and the second contains RD for records.
3		CE	[0..1]	0394	01440	Response Modality	O	
4		TS	[0..1]		01441	Execution and Delivery Time	O	
5	1	ID	[0..1]	0395	01443	Modify Indicator	O	
6		SRT	[0..1]		01624	Sort-by Field	O	
7		ID	[0..*]		01594	Segment group inclusion	O	

RCP field definitions

RCP-1 Query Priority (ID) 00027

Definition: This field contains the time frame in which the response is expected. Refer to HL7 Table 0091 - Query priority for valid values. Table values and subsequent fields specify time frames for response. Only I for immediate shall be used for this field.

RCP-2 Quantity Limited Request (CQ) 00031

Definition: This field contains the maximum length of the response that can be accepted by the requesting system. Valid entries are numerical values (in the first component) given in the units specified in the second component. Default is LI (lines). The expected type is records, so the second component is constrained to RD.

Note that this field is the maximum total records to return. The Version 2.5.1 standard indicates the maximum number to return in each batch. No batching of responses is permitted in this Guide.

RCP-3 Response Modality (CE) 01440

Definition: This field specifies the timing and grouping of the response message(s). Refer to HL7 Table 0394 – Response modality for valid values.

RCP-7 Segment Group Inclusion (ID) 01594

Definition: Specifies those optional segment groups which are to be included in the response. Refer to HL7 Table 0391—Segment group for values for Segment Group. This is a repeating field, to accommodate inclusion of multiple segment groups. The default for this field, not present, means that all relevant groups are included.

Note: Although the codes for segment groups are taken from HL7 Table 0391, the exact segment-level definition of a segment group (e.g. PIDG) is given only in the conformance statement of the query in which this segment group appears.

RXA-- Pharmacy/Treatment Administration Segment

The RXA segment carries pharmacy administration data. It is a child of an ORC segment, which a repeating segment in the RSP and VXU messages. Because ORC are allowed to repeat an unlimited numbers of vaccinations may be included in a message. Each RXA must be preceded by an ORC.[20]

There is a change requiring an ORC conflicts with the previous implementation Guide. In that, ORC is optional and in fact rarely included in a VXU.

[20] The HL7 Version 2.5.1 document clearly indicates that any RXA must be associated with an ORC. In the case of immunization, each immunization will have its own ORC.

Table 5-21 Pharmacy/Treatment Administration (RXA)

SEQ	LEN	Data Type	Cardinality	Value Set	ITEM #	ELEMENT NAME	Usage	Comment
1	4	NM	[1..1]		00342	Give Sub-ID Counter	R	Constrain to 0 (zero)
2	4	NM	[1..1]		00344	Administration Sub-ID Counter	R	Constrain to 1
3		TS	[1..1]		00345	Date/Time Start of Administration	R	
4		TS	[0..1]		00346	Date/Time End of Administration	RE	If populated, this should be the same as Start time (RXA-3)
5		CE	[1..1]	0292	00347	Administered Code	R	CVX code is strongly preferred.
6	20	NM	[1..1]		00348	Administered Amount	R	If administered amount is not recorded, use 999.
7		CE	[0..1]		00349	Administered Units	CE	If previous field is populated by any value except 999, it is required.
8		CE	[0..1]		00350	Administered Dosage Form	O	
9		CE	[0..*]	NIP 0001	00351	Administration Notes	RE	The primary use of this field it to convey if this immunization record is based on a historical record or was given by the provider recording the immunization. All systems should be able to support this use. Other uses of this field are permitted, but need to be specified locally.

SEQ	LEN	Data Type	Cardinality	Value Set	ITEM #	ELEMENT NAME	Usage	Comment
10		XCN	[0..1]		00352	Administering Provider	RE	This is the person who gave the administration.
11		LA2	[0..1]		00353	Administered-at Location	RE	
12	20	ST	[0..1]		00354	Administered Per (Time Unit)	O	
13	20	NM	[0..1]		01134	Administered Strength	O	
14		CE	[0..1]		01135	Administered Strength Units	O	
15	20	ST	[0..*]		01129	Substance Lot Number	RE	
16		TS	[0..1]		01130	Substance Expiration Date	CE	If the lot number is not null, this field should be valued.
17		CE	[0..*]	0227	01131	Substance Manufacturer Name	RE	
18		CE	[0..*]		01136	Substance/Treatment Refusal Reason	C	If the Completion status is RE, then this shall be populated
19		CE	[0..1]		01123	Indication	O	
20	2	ID	[0..1]	0322	01223	Completion Status	RE	If this field is not populated, it is assumed to be CP or complete. If the Refusal reason is populated, this field shall be set to RE.
21	2	ID	[0..1]	0323	01224	Action Code - RXA	RE	
22		TS	[0..1]		01225	System Entry Date/Time	O	
23	5	NM	[0..1]		01696	Administered Drug Strength Volume	O	

SEQ	LEN	Data Type	Cardinality	Value Set	ITEM #	ELEMENT NAME	Usage	Comment
24		CWE	[0..1]		01697	Administered Drug Strength Volume Units	O	
25		CWE	[0..1]		01698	Administered Barcode Identifier	O	
26	1	ID	[0..1]	0480	01699	Pharmacy Order Type	O	

RXA field definitions

RXA-1 Give Sub-ID Counter (NM) 00342

Definition: This field is used to match an RXA and RXG. Not a function under IIS.

Constrain to 0 (zero).

RXA-2 Administration Sub-ID Counter (NM) 00344

Definition: This field is used to track multiple RXA under an ORC. Since each ORC has only one RXA in immunization messages, constrain to 1. This should not be used for indicating dose number, which belongs in an OBX.

Note that the previous Implementation Guide suggested that this be used for indicating dose number. This use is no longer supported.

RXA-3 Date/Time Start of Administration (TS) 00345

Definition: The date this vaccination occurred. In the case of refusal or deferral, this is the date that the refusal or deferral was recorded.

RXA-4 Date/Time End of Administration (If Applies) (TS) 00346

Definition: In the context of immunization, this is equivalent to the Start date/time. If populated it should be = RXA-3. If null, the date/time of *RXA-3-Date/Time Start of Administration* is assumed.

RXA-5 Administered Code (CE) 00347

Definition: This field identifies the medical substance administered. If the substance administered is a vaccine, CVX codes should be used in the first triplet to code this field (see HL7 Table 0292 - Codes for vaccines administered). The second set of three components could be used to represent the same vaccine using a different coding system, such as Current Procedural Terminology (CPT). CVX code is the strongly preferred code system.

RXA-6 Administered Amount (NM) 00348

Definition: This field records the amount of pharmaceutical administered. The units are expressed in the next field, RXA-7. Registries that do not collect the administered amount should record the value "999" in this field.

RXA-7 Administered units (CE) 00349

Definition: This field is conditional because it is required if the administered amount code does not imply units. This field must be in simple units that reflect the actual quantity of the substance administered. It does not include compound units. This field is not required if the previous field is populated with 999.

RXA-9 Administration Notes (CE) 00351

Definition: This field is used to indicate whether this immunization record is based on a historical record or was given by the reporting provider. It should contain the information source (see *NIP-defined Table 0001 - Immunization Information Source)*. The first component shall contain the code, the second the free text and the third shall contain the name of the code system. (NIP001) Sending systems should be able to send this information. Receiving systems should be able to accept this information.

This field may be used for other notes if specified locally. The first repetition shall be the information source. If other notes are sent when information source is not populated, then the first repetition shall be empty.

Other notes may include text only in component 2 of the repeat. Acceptance of text only is by local agreement only.

Information source is an NVAC core data element. It speaks to the reliability of the immunization record. IIS rely on this information.

RXA-10 Administering Provider (XCN) 00352

Definition: This field is intended to contain the name and provider ID of the person physically administering the pharmaceutical.

Note that previous Implementation Guide (2.3.1) overloaded this field by using local codes to indicate administering provider, ordering provider and recording provider. This is a misuse of this field and not supported in this Guide. The ordering and entering providers are indicated in the associated ORC segment.

RXA-11 Administered-at Location (LA2) 00353

Definition: The name and address of the facility that administered the immunization. Note that the components used are:

Component 4: The facility name/identifier.

Subcomponent 1:identifier[21]

Subcomponent 2: Universal ID This shall be an OID, if populated. Note that this should not be a local code, but rather a universal id code.

Subcomponent 3: Universal ID type (specify which universal id type)

Note that if subcomponent 1 is populated, 2 and 3 should be empty. If subcomponent 2 is populated with an OID, subcomponent 3 must be populated with ISO.

Component 9-15: Facility address.

Components not specifically mentioned here are not expected in immunization messages.

RXA-15 Substance Lot Number (ST) 01129

Definition: This field contains the lot number of the medical substance administered. It may remain empty if the dose is from a historical record.

[21] This value should uniquely identify a specific facility. Systems may choose to publish a table with local values.

Note: The lot number is the number printed on the label attached to the container holding the substance and on the packaging which houses the container. If two lot numbers are associated with a product that is a combination of different components, they may be included in this field. The first repetition should be the vaccine.

RXA-16 Substance Expiration Date (TS) 01130

Definition: This field contains the expiration date of the medical substance administered. It may remain empty if the dose is from a historical record.

Note: Vaccine expiration date does not always have a "day" component; therefore, such a date may be transmitted as YYYYMM.

RXA-17 Substance Manufacturer Name (CE) 01131

Definition: This field contains the manufacturer of the medical substance administered.

Note: For vaccines, code system MVX should be used to code this field.

RXA-18 Substance/Treatment Refusal Reason (CE) 01136

Definition: This field contains the reason the patient refused the medical substance/treatment. Any entry in the field indicates that the patient did not take the substance. If this field is populated RXA-20, Completion Status shall be populated with RE.

RXA-20 Completion Status (ID) 01223

This field indicates if the dose was successfully given. It must be populated with RE if RXA-18 is populated. If a dose was not completely administered or if the dose were not potent this field may be used to label the immunization.

RXA-21 Action Code – RXA (ID) 01224

This field indicates the action expected by the sending system. It can facilitate update or deletion of immunization records.

ORC-3, Placer order number, may be used to link to a specific immunization if the system receiving the request has recorded this from the initial order. Local implementers should specify its' use in a local implementation guide.

The action code U (Update system) is used to indicate to a subordinate receiver that a previously sent immunization should be changed. Most IIS have specific criteria for determining whether to add or update an immunization that does not rely directly on this field. For this

reason it is common practice to indicate action as Add even if this vaccination has been previously reported. It is important to not assume that Updates will be or need to be specifically indicated.

RXA-22 System Entry Date/Time (TS) 01225

This field records the date/time that this record was created in the originating system. Local implementations should specify its' use.

RXR-- Pharmacy/Treatment Route Segment

The Pharmacy/Treatment Route segment contains the alternative combination of route, site, administration device, and administration method that are prescribed as they apply to a particular order.

Table 5-22 Pharmacy/Treatment Route (RXR)

SEQ	LEN	Data Type	Cardinality	TBL#	ITEM #	ELEMENT NAME	Usage	Constraint
1		CE	[1..1]	0162	00309	Route	R	
2		CWE	[0..1]	0163	00310	Administration Site	RE	
3		CE	[0..1]	0164	00311	Administration Device	O	
4		CWE	[0..1]	0165	00312	Administration Method	O	
5		CE	[0..1]		01315	Routing Instruction	O	
6		CWE	[0..1]	0495	01670	Administration Site Modifier	O	

RXR field definitions

RXR-1 Route (CE) 00309

Definition: This field is the route of administration.

Refer to User-Defined Table 0162 - Route Of Administration for valid values.

This will change, based on HITSP. They specify use of FDA list. Systems should be prepared to accept either FDA or HL7 codes.

RXR-2 Administration Site (CWE) 00310

Definition: This field contains the site of the administration route.

RXR-3 Administration Device (CE) 00311

Not anticipated for IIS use.

RXR-4 Administration Method (CWE) 00312

Not anticipated for IIS use.

RXR-5 Routing Instruction (CE) 01315

Not anticipated for IIS use.

RXR-6 Administration Site Modifier (CWE) 01670

Not anticipated for IIS use.

6. Messages for Transmitting Immunization Information

Introduction

This chapter describes each of the messages used to accomplish the use cases described in previous chapters. These messages are built from the segments described in Chapter 5, Segments and Message Details. The Segments are built using the Data Types specified in Chapter 4. Readers are referred to these chapters for specifics on these components. Issues related to segments and fields, which are message specific will be addressed in this chapter.

Table 6-1-Supported Messages

Message	Purpose	Related Messages	Associated Profiles
VXU	Send Immunization History	ACK	
QBP	Request Immunization History and Request Person Id	RSP	Z34^CDC
RSP	Respond to Request for Immunization Record and Respond to Request for Person Id	QBP	Z31^CDC Z32^CDC
ACK	Send Message Acknowledgement	VXU, ADT, QBP	
ADT	Send Person Demographic Data	ACK	

Send Immunization History--VXU

Systems may send unsolicited immunization records using a VXU. This may be a record that is new to the receiving system or may be an update to an existing record. The following table lists the segments that are part of a VXU. Some of the optional segments are not anticipated to be used. See Appendix B for detailed activity diagrams and example messages that illustrate the processing of this message.

Table 6-2--VXU Segment Usage

Segment	Cardinality	Usage	Comment
MSH	[1..1]	R	Every message begins with an MSH.
[{SFT }]	[0..*]	O	Not described in this Guide. May be locally specified.

Segment	Cardinality	Usage	Comment
PID	[1..1]	R	Every VXU has one PID segment.
PD1	[0..1]	RE	Every PID segment in VXU may have one or less PD1 segment
NK1	[0..*]	RE	The PID segment in a VXU may have zero or more NK1 segments.
PV1	[0..1]	RE	The PID segment in a VXU may have zero or one PV1 segment. Subsequent messages regarding the same patient/client may have a different PV1 segment.
PV2	[0..1]	O	Not described in this Guide. May be locally specified.
GT1	[0..1]	O	Not described in this Guide. May be locally specified.
IN1	[0..1]	O	Not described in this Guide. May be locally specified.
IN2	[0..1]	O	Not described in this Guide. May be locally specified.
IN3	[0..1]	O	Not described in this Guide. May be locally specified.
Begin Order group			Each VXU may have zero or more Order groups
ORC	[1..*]	RE	The PID segment in a VXU may have zero or more ORC segments.
TQ1	[0..1]	O	Not described in this Guide. May be locally specified.
TQ2	[0..1]	O	Not described in this Guide. May be locally specified.
RXA	[1..1]	R	Each ORC segment in a VXU must have one RXA segment. Every RXA requires an ORC segment.
RXR	[0..1]	RE	Every RXA segment in a VXU may have zero or one RXR segments.
OBX	[0..*]	RE	Every RXA segment in a VXU may have zero or more OBX segments.
NTE	[0..1]	RE	Every OBX segment in a VXU may have zero or one NTE segment.
End Order Group			

The following diagram illustrates the relationships of the segments. The cardinality is displayed on the association links. Note that in order for a segment to be present in a message, it must be associated with any parent segments. For example, the NTE segment can only be included in a message as a sub-segment to an OBX. Further, the OBX can only be present as a child of an RXA. Finally, a segment that is required and a

child of another segment must be present if the parent is present. If the parent is not present, it is NOT permitted.

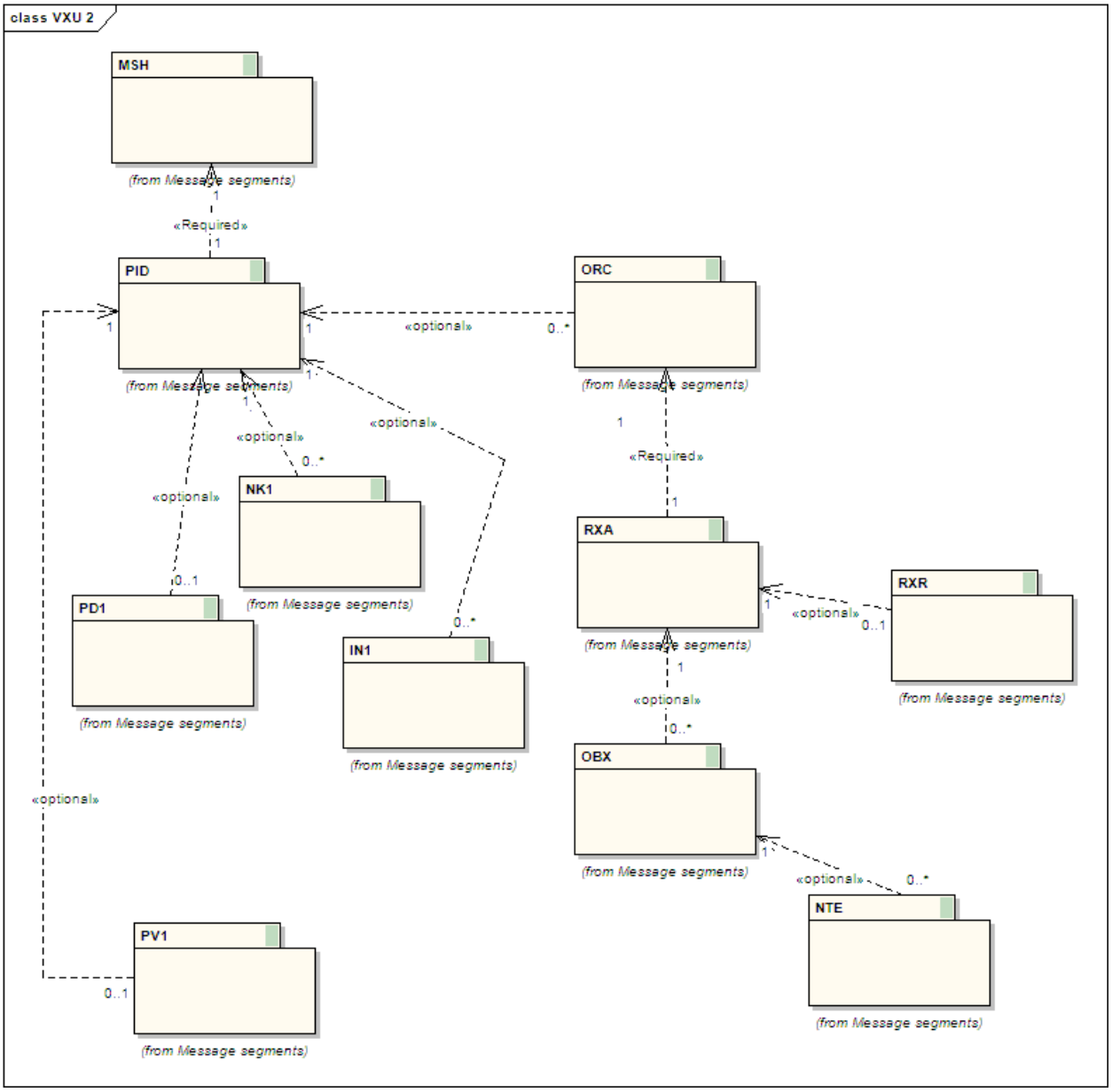

Figure 6-1-VXU Domain Diagram

Requesting Information (Immunization History) – QBP

This description will specify the use of QBP for messaging, but is not specific to the use cases in this Guide. Formal Query and Response Profiles for specifying the structure to support the use cases will follow in Chapter 7. The QBP query has a matching RSP response. (See below)

QBP/RSP – query by parameter/segment pattern response (events vary)

Table 6-3 QBP/RSP – Query By Parameter/Segment Pattern Response

Segment	Cardinality	Usage	Comment
MSH	[1..1]	R	The MSH must include an identifier which indicates the Query Profile used.
[{SFT}]	[0..1]	O	Not anticipated for use in immunization messages.
QPD	[1..1]	R	
[	--- QBP begin		
[…]	[1..*]	R	The Query Profile will specify the list of fields and their components in the order that they will be expected for this query.
]	--- QBP end		
RCP	Response Control Parameters	R	The Query Profile will list the segments that are expected to be returned in response to this query.
[DSC]	Continuation Pointer	O	Not anticipated for use in immunization messages.

Respond to Request for Information– RSP

The specifications below are not specific to the request for immunization history, but are the foundation on which those specifications are based. The Query profile for requesting an immunization history and the associated Response may be found in Chapter 7 of this Guide.

Formal Profiles based on the Query Profile in Chapter 7 will allow the requesting system to be informed if the response is a list of candidate clients or a single immunization history.

Table 6-4-Segment Pattern Response (RSP)

Segment	Cardinality	Usage	Comment
MSH	[1..1]	R	The MSH will indicate which query is being responded to and what Query Profile it was based on.
[{SFT}]	[0..1]	O	Not anticipated for use in immunization messages.
MSA	[1..1]	R	
[ERR]	[0..1]	O	
QAK	[1..1]	R	
QPD	[1..1]	R	This segment echoes the Query Parameter Definition Segment sent in the requesting query.
[	--- SEGMENT_PATTERN begin		
…	[0..1]	O	The specified segments and their contents as specified in the Segment Pattern from Query Profile, are returned here. May be null if no records returned.
]	--- SEGMENT_PATTERN end		
[DSC]	Continuation Pointer	O	Not anticipated for use in immunization messages.

Requesting An Immunization History from Another System VXQ

The use of VXQ is not supported for 2.5.1 immunization messaging.

Version 2.5.1 implementations are expected to support QBP style query.

Acknowledging a Message--ACK

The ACK returns an acknowledgement to the sending system. This may indicate errors in processing.

Table 6-5 Message Acknowledgement Segment (ACK)

Segment	Cardinality	Usage	Comment
MSH	(1..1)	R	
[{SFT}]	(0..1)	O	Not anticipated for use in immunization

Segment	Cardinality	Usage	Comment
			messages.
MSA	(1..1)	R	
[{ERR}]	(0..*)	RE	Include if there are errors.

Note: For the general acknowledgment (ACK) message, the value of MSH-9-2-Trigger event is equal to the value of MSH-9-2-Trigger event in the message being acknowledged. The value of MSH-9-3-Message structure for the general acknowledgment message is always ACK.

Sending Demographic Information – VXU or ADT

Use of the ADT message is required for participation in the PIX/PDQ profile for maintenance of the Master Person Index. In addition, it may be used to populate an IIS with data from systems that do not contain immunization data or that can't produce immunization messages.

In most cases, at present, use of the ADT message is not anticipated for widespread use outside of this context. Since this Implementation Guide focuses on messaging immunization information, those interested in use of the ADT are referred to Chapter 3 of the Version 2.5.1 documentation. In addition, the IHE profiles include clear guidelines on using an ADT. The VXU message may be used to convey demographic information without inclusion of immunization information, since ORC are optional segments.

ADT messages shall not be used for transmitting immunization records. They may be used for transmitting demographic information.

This Guide will give specifications for the Register Patient (A04) message. The only differences between A04 and A28 are the Message Type (MSH-9) and the addition of a PDA (Patient Death and Autopsy) segment for the A04 variant of the ADT. The Guide will not provide specifications for the full suite of patient management activities. Systems that will support these more extensive activities should adopt an existing profile or develop an implementation guide or profile specifying their local use.

Integrating the Healthcare Enterprise (IHE) has published a profile that provides support for the transactions that support interaction with a Master Person Index (MPI). Those planning extensive use of ADT are urged to consult these documents.

http://www.ihe.net/profiles/index.cfm
http://www.ihe.net/Technical_Framework/index.cfm [22]

[22] These links are current as of 5/1/2010.

Table 6-6-ADT A04 Message

Segment	Cardinality	Usage	Comment
MSH	[1..1]	R	Every message begins with an MSH.
[{SFT }]	[0..*]	O	
EVN	[1..1]	R	Every ADT has one EVN segment.
PID	[1..1]	R	Every ADT has one PID segment.
[PD1]	[0..1]	RE	Every PID segment in ADT may have zero or one PD1 segment
[{ROL}]	[0..*]	O	
[{ NK1 }]	[0..*]	O	The PID segment in a ADT may have zero or more NK1 segments.
PV1	[1..1]	R	The PID segment in an ADT must have one PV1 segment.
[PV2]	[0..1]	O	
[{ ROL }]	[0..*]	O	
[{ DB1 }]	[0..*]	O	
[{ OBX }]	[0..*]	O	The PID segment in an ADT may have zero or more OBX segments.
[{ AL1 }]	[0..*]	O	
[{ DG1 }]	[0..*]	O	
[DRG]	[0..*]	O	
[{			
PR1	[0..1]	O	
[{ ROL }]	[0..*]	O	
}]			
[{ GT1 }]	[0..*]	O	
[{			
IN1	[0..1]	O	
IN2	[0..1]	O	
IN3	[0..1]	O	
[{ ROL }]	[0..*]	O	
}]			
[ACC]	[0..1]	O	
[UB1]	[0..1]	O	
[UB2]	[0..1]	O	
[PDA]	[0..1]	O	

Sending Messages in a Batch

Systems may choose to send messages in batches. A batch begins with a batch header statement (BHS) and ends with a Batch Trailer Segment. Batches may in turn be batched into files of batches using File Header Statement and File Trailer statement. If a system is

sending a single batch, the FHS/FTS is not necessary. A stream of messages may be sent without use of either BHS or FHS.

The generic layout of a batch message is as follows:

BHS
VXU
VXU
…
BTS

Similarly, a file of batches is laid out as follows:
FHS
BHS
VXU
VXU
…
BTS
BHS
VXU
…
BTS
…
FTS

7. Query and Response Profile (QBP/RSP)

Request Immunization History Query Profile –Z34^CDCPHINVS

The following query profile supports replication of the functionality of the VXQ/VXX/VXR query and responses[23]. Implicit in this profile is identity resolution as it was in VXQ.

Some systems may wish to separate this functionality using the Patient Demographic Query (PDQ) profile from IHE. The results of the identity resolution accomplished with the PDQ can be used with this query profile to request an immunization history. It is anticipated that one high confidence match will be the results of this effort and the return response will be one immunization history. IHE also has a query profile to support interaction with an MPI. The PIX query requests patient identifier cross-reference. It assumes that the pertinent identifiers have been registered using ADT messages.

Integrating the Healthcare Enterprise (IHE) has published a profile that provides support for the PDQ query. In addition, they have published a supplemental Pediatric Demographic Profile that optimizes the PDQ query to support queries for children's identifiers.

http://www.ihe.net/profiles/index.cfm
http://www.ihe.net/Technical_Framework/index.cfm [24]
See Appendix B for more details on the processes.

Three profiles will be supported by CDC. One profile will reflect the query as specified below. In addition two profiles will specify constraints on the responses returned in a response to the query. One will specify a single immunization history returned. The second will specify a list of candidate clients and their identifiers.

[23] This functionality entails a query that uses demographic and other identifying information to request an immunization history. If one or more lower confidence candidates are found a list of candidates is returned. If a single high-confidence match is found, an immunization history is returned.
[24] These links are current as of 5/1/2010.

Request Immunization History Query Profile

Table 7-1 Request Immunization History Query Profile

Query Statement ID (Query ID=Z34):	Z34
Type:	Query
Query Name:	Request Immunization History
Query Trigger (= MSH-9):	QBP^Q11^QBP_Q11
Query Mode:	Both
Response Trigger (= MSH-9):	RSP^K11^RSP_K11
Query Characteristics:	The query parameters may include demographic and address data. No sorting is expected. This profile does not specify the logic used when searching for matching clients/patients. The query parameter contents may be used for simple query or as input for probabilistic search algorithms. The search methodology should be specified by local implementations.
Purpose:	The purpose is to request a complete immunization history for one client.
Response Characteristics:	• In the case where no candidates are found, the response will indicate that no candidates were found. • In the case where exactly one high-confidence candidate is found, an immunization history may be returned. • In the case where one or more clients could match the criteria sent, a list of candidates may be returned to allow for refinement of the query. If the number of candidates exceeds the maximum number requested or allowed for return, the response will indicate too many matches and no records will be returned. • In the case where receiving system can't process the query, the receiving system will indicate an error.
Based on Segment Pattern:	NA

Note that when one patient is found, a Receiving system may choose to send an immunization history or a list of one patient identifiers depending on the local business rules. This should be clearly documented in a local profile.

Each system will need to determine the business rules that deal with patients who wish to have their records protected. Some systems may choose to treat the person as if they are not in the system. Others may choose to send a response indicating that the person exists in the system but does not allow sharing. This rule should be clearly documented in the local profile.

Query Grammar

QBP^Q11^QBP_Q11	Query Grammar: QBP Message	Usage	Comment
MSH	Message Header Segment	R	
[{SFT}]	Software Segment	O	Local profile may specify
QPD	Query Parameter Definition	R	
RCP	Response Control Parameter	R	
[DSC]	Continuation Pointer	X	Not supported

Response Grammar

Table 7-2-Response Grammar to Different Outcomes

Outcome of Query	Response Message
No match found	Response indicates that message was successfully processed and that no clients matched the criteria that were sent in the query.

Exactly one high confidence match found[25]	Response includes a complete immunization history as specified below. See Profile *Return Immunization History.*
At least one lower confidence match[26] is found, but <= maximum number allowed.	Response returns one PID with associated PD1 and NK1 segments for each potential match. No immunization history is returned. See Profile *Return Candidate List*.
More than the maximum number allowed is found.	Response indicates that the message was successfully processed, but that too many potential matches were found. The maximum number allowed is the lower of the maximum number requested and the maximum number that the receiving system will return.
Message is not well formed and has fatal errors.	Response indicates that the message was not successfully processed and may indicate errors.

The response grammar below will accommodate each of the cases above. If one high confidence candidate is found then an entire immunization history may be returned. If one or more lower confidence candidates are found, then a list of patient identifiers may be returned.

The usage of segments will be specified in two separate profiles. The first profile will address the case where one or more lower confidence matches are found. In this case a list of candidates will be returned. These will not have immunization histories. (Similar to V2.3.1 VXX) The other profile will handle the case where the receiving system finds one high confidence match. In this case one client immunization record will be returned (similar to V2.3.1 VXR).

[25] Definition of match is left to local business rules. These rules should be documented in a local implementation guide. For example, a system may only return an immunization history when the match is exact, returning a list of 1 if one person for a lower probability match.
[26] More than one high confidence match constitutes is considered a set of lower confidence matches.

Response Grammar RSP^K11

Table 7-3 Response Grammar RSP^K11

Segment	Cardinality	HL7 Optionality[27]	Comment
MSH	[1..1]	R	
MSA	[1..1]	R	
[ERR]	[0..1]	O	If errors exist, then this segment is populated.
QAK	[1..1]	R	
QPD	[1..1]	R	Query Parameter Definition Segment[28]
[{	[0..1]	O	--- Response begin[29]
[{	[0..*]	O	Begin patient identifier
PID	[1..1]	R	
[PD1]	[0..1]	RE	
[{NK1 }]	[0..*]	RE	
}]			End Patient Identifier
[	[0..1]	O	Begin immunization history
[PV1]	[0..1]	RE	
[IN1]	[0..1]	RE	
[{	[0..*]	RE	Begin Order
ORC	[1..1]	R	Required if client has immunization records (RXA). There is one ORC for each RXA
			Begin Pharmacy Administration
RXA	[1..1]	R	
[RXR]	[0..1]	RE	
[{	[0..*]	RE	Begin Observation
OBX	[1..1]	R	
[{NTE }]	[0..*]	RE	

[27] Optionality is not the same as Usage, but rather the standard definitions of HL7.
[28] Matches the information in the requesting QBP message.
[29] If a query errors out or if no matching persons are found the segments in the Response group will not be returned.

}]			End observation
}]			End Pharmacy Administration End Order
]			End Immunization History
}]			Response end

MSH - MESSAGE HEADER SPECIFICATION

Table 7-4 MSH Specification for Request Immunization History Query

SEQ	LEN	Data Type	Cardinality	Value set	ITEM #	ELEMENT NAME	Usage	Constraint
1	1	ST	[1..1]		00001	Field Separator	R	The MSH.1 field shall be |
2	4	ST	[1..1]		00002	Encoding Characters	R	The MSH.2 field shall be ^~\&
3		HD	[0..1]	0361	00003	Sending Application	RE	No constraint
4		HD	[0..1]	0362	00004	Sending Facility	RE	No constraint
5		HD	[0..1]	0361	00005	Receiving Application	RE	No constraint
6		HD	[0..1]	0362	00006	Receiving Facility	RE	No constraint
7	26	TS	[1..1]		00007	Date/Time Of Message	R	The degree of precision must be at least to the second, and the time zone must be included (format YYYYMMDDHHMMSS[.S[S[S[S]]]]+/-ZZZZ).
8	40	ST	[0..1]		00008	Security	O	Null
9	15	MSG	[1..1]		00009	Message Type	R	QBP^Q11^QBP_Q11
10	20	ST	[1..1]		00010	Message Control ID	R	
11	3	PT	[1..1]		00011	Processing ID	R	
12		VID	[1..1]		00012	Version ID	R	2.5.1
13	15	NM	[0..1]		00013	Sequence Number	O	Null
14	180	ST	[0..1]		00014	Continuation Pointer	O	Null
15	2	ID	[0..1]	0155	00015	Accept Acknowledgment Type	RE	NE-Never

SEQ	LEN	Data Type	Cardinality	Value set	ITEM #	ELEMENT NAME	Usage	Constraint
16	2	ID	[0..1]	0155	00016	Application Acknowledgment Type	RE	AL-Always
17	3	ID	[0..1]	0399	00017	Country Code	O	blank
18	16	ID	[0..1]	0211	00692	Character Set	O	blank
19		CE	[0..1]		00693	Principal Language Of Message	O	blank
20	20	ID	[0..1]	0356	01317	Alternate Character Set Handling Scheme	O	blank
21		EI	[1..1]		01598	Message Profile Identifier	R	Z34^ CDCPHINVS

QPD Input Parameter Specification

Table 7-5 QPD Input Parameter Specification

Field Seq (Query ID=Z34)	Name	Key/ Search	Sort	LEN	TYPE	Opt	Rep	Match Op	TBL	Segment Field Name	Service Identifier Code	Element Name or Value
1	MessageQueryName				CE	R						Z34^Request Immunization History^HL70471
2	QueryTag			32	ST	R						
3	PatientList				CX	RE	Y			PID.3		PID-3: Patient Identifier List
4	PatientName				XPN	RE				PID.5		PID-5: Patient Name
5	PatientMotherMaiden Name				XPN	RE				PID.6		PID-6: Mother's maiden name
6	Patient Date of Birth			26	TS	RE				PID.7		PID-7: Patient date of birth
7	Patient Sex			1	IS	RE				PID.8		PID-8: Patient sex

Field Seq (Query ID=Z34)	Name	Key/ Search	Sort	LEN	TYPE	Opt	Rep	Match Op	TBL	Segment Field Name	Service Identifier Code	Element Name or Value
8	Patient Address				XAD	RE				PID.11		PID-11: Patient Address
9	Patient home phone				XTN	RE				PID.13		PID-13: Patient home phone
10	Patient multiple birth indicator			1	ID	RE				PID-24		PID-24: Patient multiple birth indicator
11	Patient birth order			2	NM	RE				PID-25		PID-25: Patient birth order
12	Client last updated date				TS	RE				PID-33		PID-33: Patient last update date
13	Client last update facility				HD	RE				PID-34		PID-34: Patient last update faciliity

QPD Input Parameter Field Description and Commentary

Table 7-6 QPD Input Parameter Field Description and Commentary

Input Parameter (Query ID=Z34)	Comp. Name	DT	Description

Input Parameter (Query ID=Z34)	Comp. Name	DT	Description
MessageQueryName		CE	Z34^Request Immunization History^HL70471
QueryTag		ST	Unique to each query message instance.
PatientList		CX	The combination of values for Patientlist.ID, patientlst.identifiercode and Patientlist.AssigningAuthority are intended to allow unique identification of a client, if the data are found in the responding system.
	ID	ST	If this field, PID.3.1, is not valued, PatientList is not considered when seeking matching clients.
	Assigning Authority	HD	If this field, PID.3.4, is not valued, PatientList is not considered when seeking matching clients.
	IdentifierTypeCode	IS	If this field, PID.3.5, is not valued, PatientList is not considered when seeking matching clients.
PatientName		XPN	If this field, PID.5, is not valued, then the query will return an error, since this is a required field.
	Family Name	FN	If this field, PID.5.1, is not valued, then patient name is considered to contain no value.
	Given Name	ST	If this field, PID.5.2, is not valued, then patient name is considered to contain no value. Given name is required.
	Second or further names	ST	If this field, PID.5.3, is not valued, then all values for this field are considered a match.
	Suffix	ST	If this field, PID.5.4, is not valued, then all values for this field are considered a match.
Mother’s Maiden Name		XPN	If this field, PID.6, is not valued, Mother’s maiden name is not considered when seeking matching clients.
	Family Name	FN	If this field, PID.6.1, is not valued, then mother’s maiden name is considered to contain no value.
	Given Name	ST	If this field, PID.6.2, is not valued, then all values for this field are considered a match.
DateOfBirth		TS	If this field, PID.7, is not valued to an accuracy of at least day,

Input Parameter (Query ID=Z34)	Comp. Name	DT	Description
			then this field is considered not valued.
Sex		IS	If this field, PID.8, is not valued, then all values for this field are considered a match.
Address		XAD	If this field, PID.11, is not valued, then address will not be considered when seeking matching clients.
	Street Address	SAD	If this field, PID.11.1, is not valued, then all values for this field are considered a match.
	City	ST	If this field, PID.11.3, is not valued, then address is considered to contain no value.
	State	ST	If this field, PID.11.4, is not valued, then address is considered to contain no value.
	ZIP	ST	If this field, PID.11.5, is not valued, then all values for this field are considered a match.
	Address Type	IS	If this field, PID.11.7 is not valued, then it shall default to L, legal address.
Phone		XTN	This field will be considered the Home phone. If this field, PID.13, is not valued, then phone number is not considered when seeking matching clients.
	Area code	NM	If this field, PID.13.6, is not valued, then all values for this field shall be considered matches.
	Local number	NM	If this field, PID.13.7, is not valued, then address is considered to contain no value.
Multiple Birth Indicator		ID	If this field, PID.24, is not valued, then Multiple Birth Indicator is not considered when seeking matching clients.
Birth Order		NM	If this field, PID.25, is not valued, then birth order is not considered when seeking matching clients.
Client last updated date		TS	If this field, PID.33, is not valued, then client last updated date is not considered when seeking matching clients.
Client last update facility		TS	If this field, PID.34, is not valued, then client last updating facility

Input Parameter (Query ID=Z34)	Comp. Name	DT	Description
			is not considered when seeking matching clients.

All of the fields used for searching in the query parameters are listed as Required but may be empty (RE) in the Guide. However, local business rules may constrain this. For instance, a system may require name, date of birth and patient id. Alternatively, it may require that at least four fields are populated or some other business rule. This must be documented in a local implementation guide or profile.

This Guide does not specify search logic. It specifies the structure and content of the message used to query. It is incumbent on systems to publically document their expectations within the constraints of this guide.

RCP Response Control Parameter Field Description and Commentary

Table 7-7 RCP Response Control Parameter Field Description and Commentary

Field Seq (Query ID=Z34)	Name	Component Name	LEN	DT	Description
1	Query Priority		1	ID	If this field is not valued then it shall default to **I**. The only value permitted is I.
2	Quantity Limited Request		10	CQ	
		Quantity		NM	The maximum number of patients that may be returned. This value is set by the requester. The sender may send up to this number.
		Units		CWE	This value shall be RD (records)
3	Response Modality		60	CWE	**R**eal time or **B**atch. Default is **R**.
7	Segment group inclusion		256	ID	This field shall be null.

Return a List of Candidates Profile -- Z31^CDCPHINVS

HL7 Version 2.5.1 Message Profile for Returning a List of Candidates in Response to a Request Immunization History Query

Introduction:

A key task that must be accomplished for immunization messaging is requesting an immunization history from another information system. There are 4 possible outcomes to a request for immunization query.

Table 7-8 Query Response Possibilities

Outcome	Action
No clients are found that match the requested person	Send acknowledgement indicating no matches found.
Exactly one high confidence match is found.	Return Immunization history (See Z32 profile)
One or more lower confidence persons match the criteria sent. Matching more than one high confidence candidate constitutes a lower confidence match.	Return a list of candidates for further refinement of selection.
The message is not well-formed and can't be processed.	Return error acknowledgement

This profile constrains the QBP Query, Request Immunization History Query Z34 , that is specified above. The goal of this profile is to constrain the response specified in the Request Immunization History query profile to a list of patients and their identifiers. In all other aspects it conforms completely with the specifications described in that query profile.

Use Case:

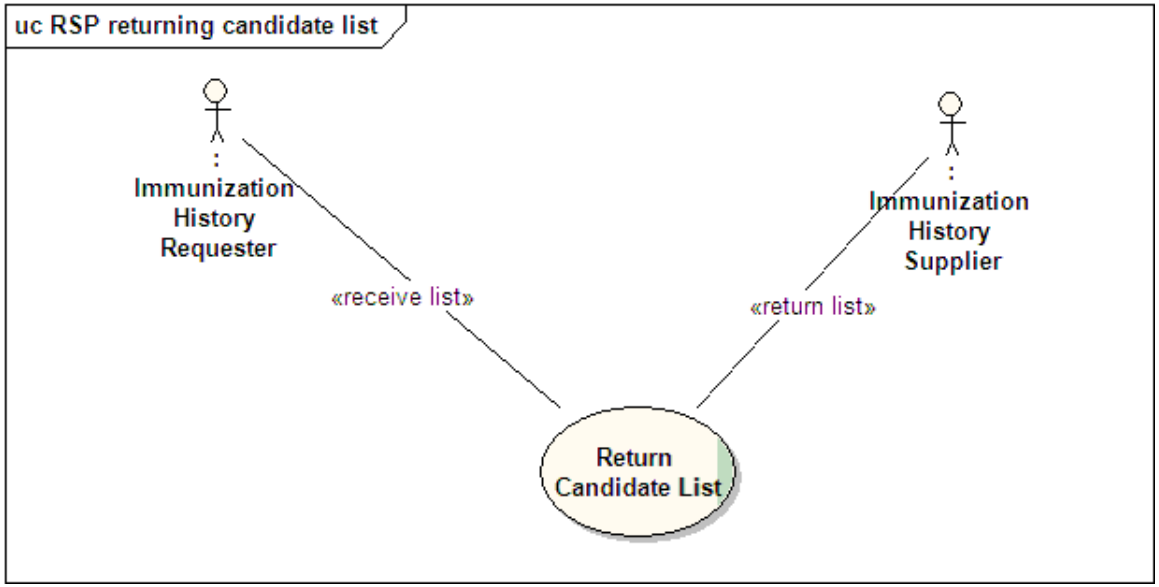

Figure 7-1--Return Candidate List

Name: Return Candidate List

Actors:

1. Immunization History Requester—is a system that requests an immunization history for a specific individual. In this use case, it receives the candidate list sent.
2. Immunization History Supplier—returns candidate list to a requester for in response to a request for immunization history.

Preconditions:

1. The History Supplier has found records for one or more persons who match the parameters in the query.
2. The History Supplier has created the response message.

Flow of Events:

1. The History Supplier sends the RSP response message.
2. The History Requester receives the RSP response message.

Post-Conditions:

1. The History Requester has a list of candidates for review and selection.

Static Definition

Response Grammar RSP^K11 Constrained by This Profile

This profile constrains the Request for Immunization Query Response Grammar by changing the cardinality of the Immunization History block to [0..0]. None of the segments within that block will be returned.

Response Grammar RSP^K11

Table 7-9 Response Grammar RSP^K11

Segment	Cardinality	HL7 Optionality	Comment
MSH	[1..1]	R	
MSA	[1..1]	R	
[ERR]	[0..1]	O	If errors exist, then this segment is populated.
QAK	[1..1]	R	
QPD	[1..1]	R	Query Parameter Definition Segment[30]
[{	[1..1]	R	--- Response begin[31]
[{	[1..*]	R	Begin patient identifier
PID	[1..1]	R	
[PD1]	[0..1]	RE	
[{NK1 }]	[0..*]	RE	

[30] Matches the information in the requesting QBP message.
[31] If a query errors out or if no matching persons are found the segments in the Response group will not be returned.

}]			End Patient Identifier
[	[0..0]	X	Begin immunization history All segments below are not returned because this group is not supported in this response profile. The cardinality and usage for each segment below is not changed.
[PV1]	[0..1]	RE	
[IN1]	[0..1]	RE	
[{	[0..*]	RE	Begin Order
ORC	[1..1]	R	Required if client has immunization records (RXA). There is one ORC for each RXA
			Begin Pharmacy Administration
RXA	[1..1]	R	
[RXR]	[0..1]	RE	
[{	[0..*]	RE	Begin Observation
OBX	[1..1]	R	
[{NTE }]	[0..*]	RE	
}]			End observation
}]			End Pharmacy Administration End Order
]			End Immunization History
}]			Response end

This profile indicates that a list of patient identification shall be returned. It shall be identified in MSH-21 by its profile identifier.

Segment Level Profile

This profile makes no changes to the parent query profile.

Field Level Profile

This profile makes no changes to the parent query profile, with the exception of the MSH-21 field, which contains the profile identifier, Z31^CDCPHINVS.

Dynamic Definition

Sequence Diagram

Figure 7-2 Return Candidate List (RSP^K11)

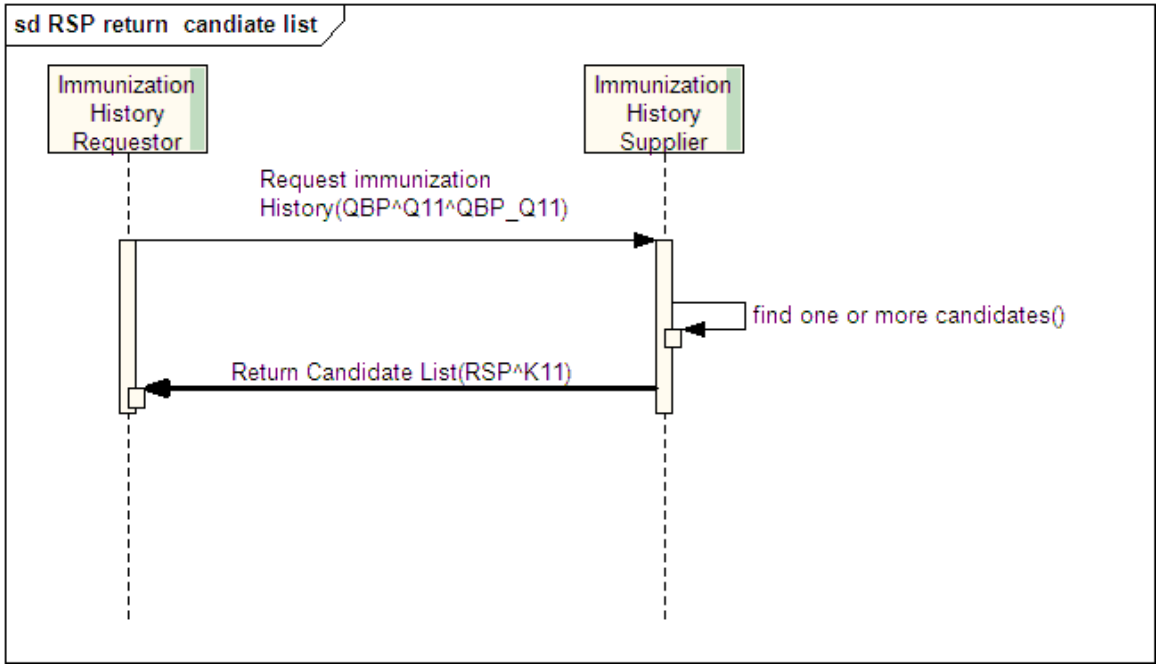

This diagram illustrates the context of the message. The message specified in this profile is in Bold and labeled Return Candidate List(RSP^K11).

Acknowledgement Responsibilities

Application level acknowledgement is allowed, but not required.

Return an Immunization History – Z32^CDCPHINVS

HL7 Version 2.5.1 Message Profile for Returning an Immunization History

Introduction:

A key task that must be accomplished for immunization messaging is requesting an immunization history from another information system. One component of that process is returning an immunization history. This profile constrains the QBP Query, Request Immunization History Query Z34 , that is specified above. That query profile specifies the query for requesting an immunization history and is intended to support 2 types of response. One response returns a list of candidate client/patients to be the basis of further selection. That selection is then used to re-query for an immunization history. The second is a response that returns an immunization history. This second is the focus of this message profile. The goal of this profile is to constrain the response specified in the Request Immunization History query profile to a single immunization history. In all other aspects it conforms completely with the specifications described in the implementation Guide for this query profile.

Use Case:

Name: Return Immunization History

Figure 7-3 Return Immunization History Use Case

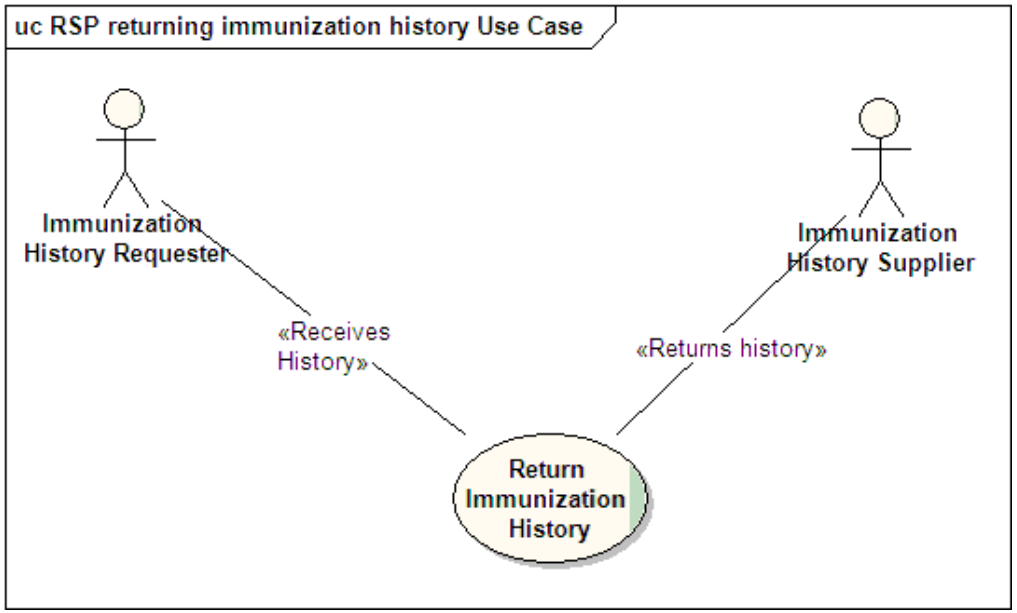

Actors:

1. Immunization History Requester—is a system that requests an immunization history for a specific individual. In this use case, it receives the immunization history sent.
2. Immunization History Supplier—returns an immunization history to a requester for a specific individual in response to a request for immunization history.

Preconditions:

1. The History Supplier has found the records for the requested person.
2. The History Supplier has created the response message.

Flow of Events:

1. The History Supplier sends the RSP response message.
2. The History Requester receives the RSP response message.

Post-Conditions:

1. The History Requester has the immunization history.

Static Definition

Response Grammar RSP^K11 Constrained by This Profile

This profile constrains the Request for Immunization Query Response Grammar by changing the cardinality of the response to one repetition.

Response Grammar RSP^K11

Figure 7-4 Return Immunization History Response Grammar

Segment	Cardinality	Comment
MSH	[1..1]	
MSA	[1..1]	
[ERR]	[0..*]	If errors exist, then this segment is populated.
QAK	[1..1]	
QPD	[1..1]	Query Parameter Definition Segment[32]
RCP		
[	[0..1]	--- Response control parameter begin Note Changed Cardinality
		Begin patient identifier
PID	(1..1)	
[PD1]	(0..1)	

[32] Matches the information in the requesting QBP message.

[{NK1 }]	(0..*)	
		End Patient Identifier
[		Begin patient visit
PV1	(0..1)	
]		
[		Begin Insurance
IN1	(0..1)	
]		End Insurance
[{	(0..*)	Begin Order
ORC	[1..1]	Required if client has immunization records (RXA). There is one ORC for each RXA
		Begin Pharmacy Administration
RXA	(1..1)	
[RXR]	(0..1)	
[{	(0..*)	Begin Observation
OBX	(1..1)	
[{NTE }]	(0..*)	
}]		End observation
}]		End Pharmacy Administration End Order
]	---	Response control parameter end

This profile indicates that only one repetition of an entire immunization history shall be returned. It shall be identified in MSH-21 by its profile identifier.

Segment Level Profile

This profile makes no changes to the parent query profile.

Field Level Profile

This profile makes no changes to the parent query profile, with the exception of the MSH 21 profile identifier, Z32^CDCPHINVS.

Dynamic Definition

Sequence Diagram

Figure 7-5 Return Immunization History Sequence Diagram

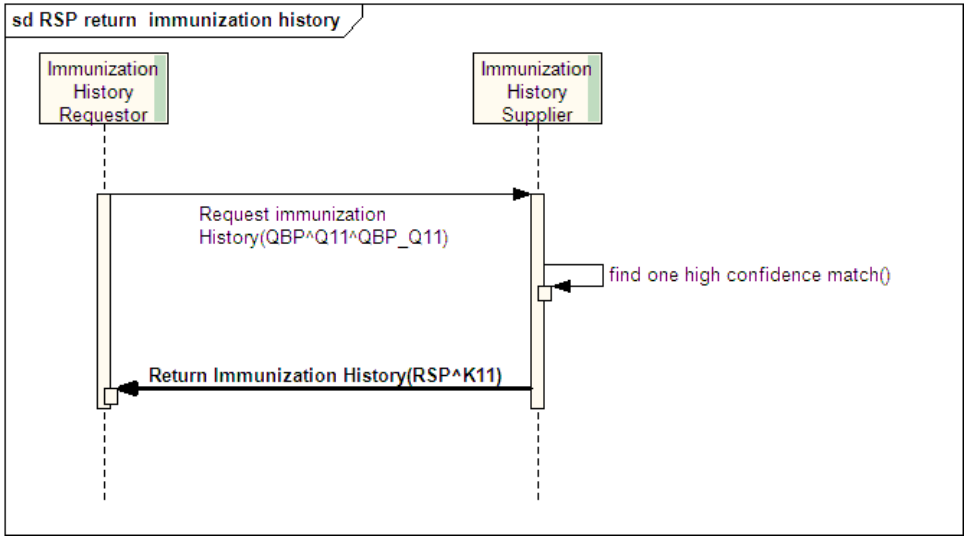

This diagram illustrates the context of the message. The message specified in this profile is in Bold and labeled Return Immunization History(RSP^K11).

Acknowledgement Responsibilities

Application level acknowledgement is allowed, but not required.

APPENDIX A: Code Tables

Revision History		
Author	**Revision**	**Date**
Rob Savage	Release 1	5/1/2010

NOTE: Where only selected values are listed for HL7 tables, please refer to the HL7 Standard for complete listings. In this appendix, values are selected from standard code sets where available.

User-defined Table 0001 - Sex [values suggested by HL7] (use in PID-8, NK1-15)
This code reflects the self reported gender.

Value set OID: 2.16.840.1.113883.1.11.1

Value	Description	Definition
F	Female	Person reports that she is female.
M	Male	Person reports that he is male.
U	Unknown/undifferentiated	No assertion Is made about the gender of the person.

HL7-defined Table 0003 - Event type [only selected values listed] (use in MSH-9, second component)
This code indicates the trigger event. Refer to Chapter 3, Version 2.5.1 for further information on HL7 event triggers.

Value	Description
A28	ADT/ACK - Add person information
A08	ADT/ACK – Update person information
A04	ADT/ACK – Register a patient
Q11	QBP - Query by parameter requesting an RSP segment pattern response (Query for vaccination record)
K11	RSP - Segment pattern response in response to QBP^Q11 (Response to vaccination query)
V04	VXU - Unsolicited vaccination record update

User-defined Table 0004 - Patient class [values suggested by HL7] (use in PV1-2)
This code categorizes the patient in the current event.

The only value supported is R for recurring patient. For a current list of HL7 values please reference the HL7 version 2.5.1 documents.

User-defined Table 0005 - Race [These values are consistent with the OMB Notice of revised categories for collection of race and ethnicity data—the combined format.] (use in PID-10, NK1-35)
This code represents the client's self-reported race.

Value set OID: 2.16.840.1.113883.1.11.14914

US race codes (included in HL7 Version 2.4) (entire hierarchical set of codes at http://www.cdc.gov/od/hissb/docs/Race-EthnicityCodeSet.pdf)	Description
1002-5	American Indian or Alaska Native
2028-9	Asian
2076-8	Native Hawaiian or Other Pacific Islander
2054-5	Black or African-American
2106-3	White
2131-1	Other Race
<empty field>	Unknown/undetermined

The following table is included for reference. The NIP original race codes are still accepted for backwards compatibility. The numeric code US race codes should be used.

US race codes (included in HL7 Version 2.4) (entire hierarchical set of codes at http://www.cdc.gov/od/hissb/docs/Race-EthnicityCodeSet.pdf)	Description	NIP original race codes	Description
1002-5	American Indian or Alaska Native	I	American Indian or Alaska Native
2028-9	Asian	A	Asian or Pacific Islander
2076-8	Native Hawaiian or Other Pacific Islander	A	Asian or Pacific Islander
2054-5	Black or African-American	B	Black or African-American
2106-3	White	W	White

2131-1	Other Race	O	Other
	Unknown	U	Unknown

HL7-defined Table 0008 - Acknowledgment code (use in MSA-1)
This code indicates the type of acknowledgement expected.

Value	Description
AA	Original mode: Application Accept Enhanced mode: Application acknowledgment: Accept
AE	Original mode: Application Error Enhanced mode: Application acknowledgment: Error
AR	Original mode: Application Reject Enhanced mode: Application acknowledgment: Reject
CA	Enhanced mode: Accept acknowledgment: Commit Accept
CE	Enhanced mode: Accept acknowledgment: Commit Error
CR	Enhanced mode: Accept acknowledgment: Commit Reject

User-defined Table 0010 - Physician ID (use in all XCN data types; including PV1-7,8,9,17, RXA-10)
[locally-defined] Each registry should establish a system of coding its reporting physicians. The National Provider Identifier (NPI) adopted for the HIPAA legislation may be used for this purpose.

HL7-defined Table 0061 - Check digit scheme (use in all CX data types; including PID-2,3,4,18,21)

Value	Description
M10	Mod 10 algorithm
M11	Mod 11 algorithm
ISO	ISO 7064: 1983
NPI	Check digit algorithm in the US National Provider Identifier

User-defined Table 0063 - Relationship [as defined in HL7's Version 2.4] (use in NK1-3, IN1-17)

Value	Description
BRO	Brother
CGV	Care giver

Value	Description
FCH	Foster child
FTH	Father
GRD	Guardian
GRP	Grandparent
MTH	Mother
OTH	Other
PAR	Parent
SCH	Stepchild
SEL	Self
SIB	Sibling
SIS	Sister
SPO	Spouse

User-defined Table 0064 - Financial class [*NIP suggested values*] (use in PV1-20)
Financial class references a client's eligibility status at a point in time. The values in this table relate to eligibility for the Vaccine for Children (VFC) program. Local implementations may define and document local codes.

Note that funding source for a specific immunization is different from Financial Class. These are documented in CDC local codes table, CDCPHINVS (Value set OID **2.16.840.1.114222.4.11.3287).**

Code	Lable	Definition
V01	Not VFC eligible	Client does not qualify for VFC because they do not have one of the statuses below. This category does not include the underinsured (see V08).
V02	VFC eligible-Medicaid/Medicaid Managed Care	Client is currently on Medicaid or Medicaid managed care.
V03	VFC eligible-Uninsured	Client does not have insurance coverage for vaccinations.
V04	VFC eligible-American Indian/Alaskan Native	Client is a member of a federally recognized tribe.
V05	VFC eligible-Federally Qualified Health Center Patient (under-insured)	Client has insurance that partially covers vaccines received on visit and so is eligible for VFC coverage at a Federally Qualified Health Center. The client must be receiving the immunizations at the FQHC.
V06	VFC eligible- State specific eligibility (e.g. S-CHIP plan)	Client is eligible for VFC, based on State-specific rules, such as S-CHIP.

V07	VFC eligibility-Local-specific eligibility	Client is eligible for VFC, based on local-specific rules.
V08	Not VFC eligible-Under-insured	Client has insurance that partially covers vaccines received on visit. The immunizations were not administered at a Federally Qualified Health Center (FQHC)

HL7-defined Table 0076 - Message type [only selected values listed] (use in MSH-9, first component)

Value	Description	Usage in this guide
ACK	General acknowledgment	Supported
ADT	ADT message	Supported
QBP	Query by Parameter	Supported
RSP	Response to Query by parameter	Supported
VXU	Unsolicited vaccination record update	Supported

HL7-defined Table 0078 - Abnormal flags (use in OBX-8)
Fields using this code set are expected to be null. For a current list of HL7 values please reference the HL7 version 2.5.1 documents.

HL7-defined Table 0085 - Observation result status codes interpretation (use in OBX-11)
Fields using this code set are expected to be F for Final. For a current list of HL7 values please reference the HL7 version 2.5.1 documents.

HL7-defined Table 0091 - Query priority
Fields using this code set are expected to be I or null, which indicates Immediate processing is expected. For a current list of HL7 values please reference the HL7 version 2.5.1 documents.

HL7-defined Table 0102 - Delayed acknowledgment type (use in MSA-5)
Fields using this code set are expected to be null. For a current list of HL7 values please reference the HL7 version 2.5.1 documents.

HL7-defined Table 0103 - Processing ID (use in MSH-11)

Value	Description
D	Debugging
P	Production
T	Training

HL7-defined Table 0104 - Version ID (use in MSH-12)

Value	Description
2.1	Release 2.1
2.2	Release 2.2
2.3	Release 2.3 March 1997
2.3.1	Release 2.3.1 May 1999
2.4	Release 2.4 October 2000
2.5.1	Release 2.5.1 April 2007

HL7-defined Table 0105 - Source of comment (use in NTE-2)
Fields using this code set are expected to be null. For a current list of HL7 values please reference the HL7 version 2.5.1 documents.

HL7-defined Table 0119 – Order Control Codes (use in ORC-1)

Value	Description	Usage
OK	Order accepted & OK	Not supported
RE	Observations to follow	Supported

HL7-defined Table 0126 - Quantity limited request (use in RCP-2)
Fields using this code set are expected to be set to RD for records. For a current list of HL7 values please reference the HL7 version 2.5.1 documents.

HL7-defined Table 0136 - Yes/No indicator (use in PID-24,30; PD1-12)

Value	Description
Y	Yes
N	No

In fields that may be empty, such as PD1-12 no value should be entered if the value is not Y or N. In HL7 “” means remove the previous value. If the field is empty, then it means do nothing to existing values.

Note on Null and Empty in HL7

Note that in the previous Implementation Guide, the undetermined state was signified by “” (HL7 null). This has a specific meaning in HL7. It means “change the state in the receiving system to null”. The empty field means that the existing state should remain unchanged in the receiving system.

Value in Field	Meaning
“” |””|	Nullify the value recorded in the receiving system data base.
<empty field> ||	Make no changes to the record in the receiving data base. The sending system has no information on this field.

HL7-defined Table 0155 - Accept/Application acknowledgment conditions (use in MSH-15 and 16)

Value	Description
AL	Always
NE	Never
ER	Error/Reject conditions only
SU	Successful completion only

HL7-defined Table 0162 - Route of administration [only selected values listed] (use in RXR-1)

Note that HITSP has specified the use of the FDA route of administration. The following table maps these to the HL7 table 0162 values.

FDA	HL7-0162	Description	Definition
C38238	ID	Intradermal	within or introduced between the layers of the skin
C28161	IM	Intramuscular	within or into the substance of a muscle
C38284	NS	Nasal	Given by nose
	~~*IN*~~	~~*Intranasal*~~	***{Do not use this older code}***
C38276	IV	Intravenous	administered into a vein
C38288	PO	Oral	administered by mouth
	OTH	Other/Miscellaneous	
C38676		Percutaneous	made, done, or effected through the skin.
C38299	SC	Subcutaneous	Under the skin or between skin and muscles.
C38305	TD	Transdermal	describes something, especially a drug, that is introduced into the body through the skin

Example

|C28161^Intramuscular^NCIT|

|SC^Subcutaneous^HL70162|

HL7-defined Table 0163 - Administrative site [only selected values listed] (use in RXR-2)

HITSP has recommended the use of SNOMED codes. At this point not all of these concepts have pre-coordinated SNOMED codes. The post-coordinated are longer than the nominal length of the first component of the CE data type. Therefore, this guide will continue to support the HL7 0163 codes.

SNOMED	**HL7 0163**	**Description**
	LT	Left Thigh
	LA	Left Upper Arm
	LD	Left Deltoid
	LG	Left Gluteous Medius
	LVL	Left Vastus Lateralis
	LLFA	Left Lower Forearm
	RA	Right Upper Arm
	RT	Right Thigh
	RVL	Right Vastus Lateralis
	RG	Right Gluteous Medius
	RD	Right Deltoid
	RLFA	Right Lower Forearm

User-defined Table 0189 - Ethnic Group [These values are consistent with the OMB Notice of revised categories for collection of race and ethnicity data and with HL7's Version 2.4] (use in PID-22, NK1-28)

US ethnicity codes	HL7 Version 2.4 ethnicity codes	Description
2135-2	H	Hispanic or Latino
2186-5	N	not Hispanic or Latino
	U	Unknown

HL7-defined Table 0190 - Address type (use in all XAD data types; including PID-11)

Value	Description
C	Current or temporary
P	Permanent
M	Mailing
B	Firm/Business
O	Office
H	Home

N	Birth (nee)
F	Country of origin
L	Legal address
BDL	Birth delivery location [*use for birth facility*]
BR	Residence at birth [*use for residence at birth*]
RH	Registry home
BA	Bad address

Recording of Birth State uses the BDL, birth delivery location code.

HL7-defined Table 0200 - Name type (use in all XCN, XPN data types; including PID-5, 6, 9)

Value	Description	Definition
A	Alias name	This is a nickname or other assumed name.
L	Legal name	This a person's official name. It is the primary name recorded in the IIS.
D	Display name	This is the preferred name displayed on a user interface.
M	Maiden name	This is a woman's name before marriage.
C	Adopted name	This is the name of a person after adoption.
B	Name at birth	This is name recorded at birth (prior to adoption).
P	Name of partner/spouse	This is the name of the partner or spouse.
U	Unspecified	This is a name of unspecified type.

HL7-defined Table 0201 - Telecommunication use code (use in all XTN data types; including PID-13,14)

Value	Description
PRN	Primary residence number
ORN	Other residence number
WPN	Work number
VHN	Vacation home number
ASN	Answering service number
EMR	Emergency number
NET	Network (email) address
BPN	Beeper number

HL7-defined Table 0202 - Telecommunication equipment type (use in all XTN data types; including PID-13,14)

Value	Description
PH	Telephone
FX	Fax
MD	Modem
CP	Cellular phone
BP	Beeper
Internet	Internet address: Use only if telecommunication use code is NET
X.400	X.400 email address: Use only if telecommunication use code is NET
TDD	Telecommunications Device for the Deaf
TTY	Teletypewriter

User-defined Table 0203 - Identifier type [values suggested by HL7; *with NIP-suggested additions*] (use in all CX, XCN type codes; including PID-2,3,4,18,21 and RXA-10)

HL7 Table 0203 - Identifier type

Value	Description	Comment
AN	Account number	An identifier that is unique to an account.
ANON	Anonymous identifier	An identifier for a living subject whose real identity is protected or suppressed Justification: For public health reporting purposes, anonymous identifiers are occasionally used for protecting patient identity in reporting certain results. For instance, a state health department may choose to use a scheme for generating an anonymous identifier for reporting a patient that has had a positive human immunodeficiency virus antibody test. Anonymous identifiers can be used in PID 3 by replacing the medical record number or other non-anonymous identifier. The assigning authority for an anonymous identifier would be the state/local health department.
ANC	Account number Creditor	Class: Financial A more precise definition of an account number: sometimes two distinct account numbers must be transmitted in the same message, one as the creditor, the other as the debtor.
AND	Account number debitor	Class: Financial A more precise definition of an account number: sometimes two distinct account numbers must be transmitted in the same message, one as the creditor, the other as the debtor.
ANT	Temporary Account Number	Class: Financial Temporary version of an Account Number. Use Case: An ancillary system that does not normally assign account numbers is the first time to register a patient. This ancillary system will generate a temporary account number that will only be used until an official account number is assigned.
APRN	Advanced Practice Registered Nurse number	An identifier that is unique to an advanced practice registered nurse within the jurisdiction of a certifying board
BA	Bank Account Number	Class: Financial
BC	Bank Card Number	Class: Financial An identifier that is unique to a person's bank card. Replaces AM, DI, DS, MS, and VS beginning in v 2.5.
BR	Birth registry number	
CC	Cost Center number	Class: Financial Use Case: needed especially for transmitting information about invoices.
CY	County number	
DDS	Dentist license number	An identifier that is unique to a dentist within the jurisdiction of the licensing board

Value	Description	Comment
DEA	Drug Enforcement Administration registration number	An identifier for an individual or organization relative to controlled substance regulation and transactions. Use case: This is a registration number that identifies an individual or organization relative to controlled substance regulation and transactions. A DEA number has a very precise and widely accepted meaning within the United States. Surprisingly, the US Drug Enforcement Administration does not solely assign DEA numbers in the United States. Hospitals have the authority to issue DEA numbers to their medical residents. These DEA numbers are based upon the hospital's DEA number, but the authority rests with the hospital on the assignment to the residents. Thus, DEA as an Identifier Type is necessary in addition to DEA as an Assigning Authority.
DFN	Drug Furnishing or prescriptive authority Number	An identifier issued to a health care provider authorizing the person to write drug orders Use Case: A nurse practitioner has authorization to furnish or prescribe pharmaceutical substances; this identifier is in component 1.
DL	Driver's license number	
DN	Doctor number	
DPM	Podiatrist license number	An identifier that is unique to a podiatrist within the jurisdiction of the licensing board.
DO	Osteopathic License number	An identifier that is unique to an osteopath within the jurisdiction of a licensing board.
DR	Donor Registration Number	
EI	Employee number	A number that uniquely identifies an employee to an employer.
EN	Employer number	
FI	Facility ID	
GI	Guarantor internal identifier	Class: Financial
GL	General ledger number	Class: Financial
GN	Guarantor external identifier	Class: Financial
HC	Health Card Number	
JHN	Jurisdictional health number (Canada)	Class: Insurance 2 uses: a) UK jurisdictional CHI number; b) Canadian provincial health card number:
IND	Indigenous/Aboriginal	A number assigned to a member of an indigenous or aboriginal group outside of Canada.
LI	Labor and industries number	
LN	License number	
LR	Local Registry ID	
MA	Patient Medicaid number	Class: Insurance
MB	Member Number	An identifier for the insured of an insurance policy (this insured always has a subscriber), usually assigned by the insurance carrier. Use Case: Person is covered by an insurance policy. This person may or may not be the subscriber of the policy.
MC	Patient's Medicare number	Class: Insurance
MCD	Practitioner Medicaid number	Class: Insurance
MCN	Microchip Number	
MCR	Practitioner Medicare number	Class: Insurance

Value	Description	Comment
MD	Medical License number	An identifier that is unique to a medical doctor within the jurisdiction of a licensing board. Use Case: These license numbers are sometimes used as identifiers. In some states, the same authority issues all three identifiers, e.g., medical, osteopathic, and physician assistant licenses all issued by one state medical board. For this case, the CX data type requires distinct identifier types to accurately interpret component 1. Additionally, the distinction among these license types is critical in most health care settings (this is not to convey full licensing information, which requires a segment to support all related attributes).
MI	Military ID number	A number assigned to an individual who has had military duty, but is not currently on active duty. The number is assigned by the DOD or Veterans' Affairs (VA).
MR	Medical record number	An identifier that is unique to a patient within a set of medical records, not necessarily unique within an application.
MRT	Temporary Medical Record Number	Temporary version of a Medical Record Number Use Case: An ancillary system that does not normally assign medical record numbers is the first time to register a patient. This ancillary system will generate a temporary medical record number that will only be used until an official medical record number is assigned.
NE	National employer identifier	In the US, the Assigning Authority for this value is typically CMS, but it may be used by all providers and insurance companies in HIPAA related transactions.
NH	National Health Plan Identifier	Class: Insurance Used for the UK NHS national identifier. In the US, the Assigning Authority for this value is typically CMS, but it may be used by all providers and insurance companies in HIPAA related transactions.
NI	National unique individual identifier	Class: Insurance In the US, the Assigning Authority for this value is typically CMS, but it may be used by all providers and insurance companies in HIPAA related transactions.
NII	National Insurance Organization Identifier	Class: Insurance In Germany a national identifier for an insurance company. It is printed on the insurance card (health card). It is not to be confused with the health card number itself.
NIIP	National Insurance Payor Identifier (Payor)	Class: Insurance Use case: a subdivision issues the card with their identifier, but the main division is going to pay the invoices.
NNxxx	National Person Identifier where the xxx is the ISO table 3166 3-character (alphabetic) country code	
NP	Nurse practitioner number	An identifier that is unique to a nurse practitioner within the jurisdiction of a certifying board.
NPI	National provider identifier	Class: Insurance In the US, the Assigning Authority for this value is typically CMS, but it may be used by all providers and insurance companies in HIPAA related transactions.

Value	Description	Comment
OD	Optometrist license number	A number that is unique to an individual optometrist within the jurisdiction of the licensing board.
PA	Physician Assistant number	An identifier that is unique to a physician assistant within the jurisdiction of a licensing board
PCN	Penitentiary/correctional institution Number	A number assigned to individual who is incarcerated.
PE	Living Subject Enterprise Number	An identifier that is unique to a living subject within an enterprise (as identified by the Assigning Authority).
PEN	Pension Number	
PI	Patient internal identifier	A number that is unique to a patient within an Assigning Authority.
PN	Person number	A number that is unique to a living subject within an Assigning Authority.
PNT	Temporary Living Subject Number	Temporary version of a Lining Subject Number.
PPN	Passport number	A unique number assigned to the document affirming that a person is a citizen of the country. In the US this number is issued only by the State Department.
PRC	Permanent Resident Card Number	
PRN	Provider number	A number that is unique to an individual provider, a provider group or an organization within an Assigning Authority. Use case: This allows PRN to represent either an individual (a nurse) or a group/organization (orthopedic surgery team).
PT	Patient external identifier	
QA	QA number	
RI	Resource identifier	A generalized resource identifier. Use Case: An identifier type is needed to accommodate what are commonly known as resources. The resources can include human (e.g. a respiratory therapist), non-human (e.g., a companion animal), inanimate object (e.g., an exam room), organization (e.g., diabetic education class) or any other physical or logical entity.
RPH	Pharmacist license number	An identifier that is unique to a pharmacist within the jurisdiction of the licensing board.
RN	Registered Nurse Number	An identifier that is unique to a registered nurse within the jurisdiction of the licensing board.
RR	Railroad Retirement number	
RRI	Regional registry ID	
SL	State license	
SN	Subscriber Number	Class: Insurance An identifier for a subscriber of an insurance policy which is unique for, and usually assigned by, the insurance carrier. Use Case: A person is the subscriber of an insurance policy. The person's family may be plan members, but are not the subscriber.
SR	State registry ID	
SS	Social Security number	
TAX	Tax ID number	
U	Unspecified identifier	
UPIN	Medicare/CMS (formerly HCFA)'s Universal Physician Identification numbers	Class: Insurance
VN	Visit number	

Value	Description	Comment
WC	WIC identifier	
WCN	Workers' Comp Number	
XX	Organization identifier	

User-defined Table 0204 - Organizational name type [values suggested by HL7] (use in all XON data types)

Value	Description
L	Legal name
D	Display name

HL7-defined Table 0207 - Processing mode (use in MSH-11)
Fields using this code set are expected to be null. For a current list of HL7 values please reference the HL7 version 2.5.1 documents.

User-defined Table 0208 - Query response status [values suggested by HL7] (use in QAK-2)

Value	Description
OK	Data found, no errors (this is the default)
NF	No data found, no errors
AE	Application error
AR	Application reject

HL7-defined Table 0211 - Alternate character sets (use in MSH-18)
Fields using this code set are expected to be null. For a current list of HL7 values please reference the HL7 version 2.5.1 documents.

User-defined Table 0215 - Publicity code [*values suggested by NIP*] (use in PD1-11)

Value	Description
01	*No reminder/recall*
02	*Reminder/recall - any method*
03	*Reminder/recall - no calls*
04	*Reminder only - any method*
05	*Reminder only - no calls*
06	*Recall only - any method*
07	*Recall only - no calls*
08	*Reminder/recall - to provider*
09	*Reminder to provider*
10	*Only reminder to provider, no recall*
11	*Recall to provider*
12	*Only recall to provider, no reminder*

User-defined Table 0220 - Living arrangement
Fields using this code set are expected to be null. For a current list of HL7 values please reference the HL7 version 2.5.1 documents.

HL7-defined Table 0227 - Manufacturers of vaccines (code = MVX) (use in RXA-17) The table below represents the February 2010 version of the MVX code set. The CDC's National Center for Immunization and Respiratory Diseases (NCIRD) maintains the HL7 external code set MVX. http://www.cdc.gov/vaccines/programs/iis/stds/mvx.htm[33]

NOTE: The MVX table reflects name changes and changes in corporate status. Where there have been company mergers/acquisitions, the affected old codes have been labeled "inactive. The inactive manufacturer codes are retained to allow manufacturer to be identified for historic immunization records. They should not be used for current immunizations. Inactive codes should not be cross-walked to the code for the current manufacturer.

(alphabetized by manufacturer name)

MVX CODE	Manufacturer Name	Active	Notes
AB	Abbott Laboratories	TRUE	includes Ross Products Division
ACA	Acambis, Inc	FALSE	acquired by sanofi in sept 2008
AD	Adams Laboratories, Inc.	TRUE	
AKR	Akorn, Inc	TRUE	
ALP	Alpha Therapeutic Corporation	TRUE	
AR	Armour	FALSE	
AVB	Aventis Behring	FALSE	

[33] This link is current as of 5/1/2010.

	L.L.C.		
AVI	Aviron	FALSE	acquired by medimmune
BA	Baxter Healthcare Corporation	FALSE	
BAH	Baxter Healthcare Corporation	TRUE	includes Hyland Immuno, Immuno International AG,and North American Vaccine, Inc./acquired some assets from alpha therapeutics
BAY	Bayer Corporation	FALSE	bayer biologicals now owned by talecris
BP	Berna Products	FALSE	
BPC	Berna Products Corporation	TRUE	includes Swiss Serum and Vaccine Institute Berne
MIP	Bioport Corporation	TRUE	formerly Michigan Biologic Products Institute
BTP	Biotest Pharmaceuticals Corporation	TRUE	New owner of NABI HB as of December 2007, Does NOT replace NABI Biopharmaceuticals in this code list.
CNJ	Cangene Corporation	TRUE	
CMP	Celltech Medeva Pharmaceuticals	FALSE	
CEN	Centeon L.L.C.	FALSE	
CHI	Chiron Corporation	FALSE	
CON	Connaught	FALSE	acquired by Merieux
CSL	CSL Biotherapies, Inc	TRUE	CSL Biotherapies renamed to CSL Behring
DVC	DynPort Vaccine Company, LLC	TRUE	
EVN	Evans Medical Limited	FALSE	
GEO	GeoVax Labs, Inc.	TRUE	
SKB	GlaxoSmithKline	TRUE	includes SmithKline Beecham and Glaxo Wellcome
GRE	Greer Laboratories, Inc.	TRUE	
IAG	Immuno International AG	FALSE	
IUS	Immuno-U.S., Inc.	TRUE	
INT	Intercell Biomedical	TRUE	
KGC	Korea Green Cross Corporation	TRUE	
LED	Lederle	FALSE	
MBL	Massachusetts Biologic Laboratories	TRUE	formerly Massachusetts Public Health Biologic Laboratories

MA	Massachusetts Public Health Biologic Laboratories	FALSE	
MED	MedImmune, Inc.	TRUE	acquisitions of U.S. Bioscience in 1999 and Aviron in 2002, as well as the integration with Cambridge Antibody Technology and the strategic alignment with our new parent company, AstraZeneca, in 2007.
MSD	Merck & Co., Inc.	TRUE	
IM	Merieux	FALSE	
MIL	Miles	FALSE	
NAB	NABI	TRUE	formerly North American Biologicals, Inc.
NYB	New York Blood Center	TRUE	
NAV	North American Vaccine, Inc.	FALSE	
NOV	Novartis Pharmaceutical Corporation	TRUE	includes Chiron, PowderJect Pharmaceuticals, Celltech Medeva Vaccines and Evans Limited, Ciba-Geigy Limited and Sandoz Limited
NVX	Novavax, Inc.	TRUE	
OTC	Organon Teknika Coporation	TRUE	
ORT	Ortho-clinical Diagnostics	TRUE	a J & J company (formerly Ortho Diagnostic Systems, Inc.)
OTH	Other manufacturer	TRUE	
PD	Parkedale Pharmaceuticals	FALSE	no website and no news articles (formerly Parke-Davis)
PFR	Pfizer	TRUE	
PWJ	PowderJect Pharmaceuticals	FALSE	
PRX	Praxis Biologics	FALSE	
PMC	sanofi pasteur	TRUE	(formerly Aventis Pasteur, Pasteur Merieux Connaught; includes Connaught Laboratories and Pasteur Merieux)
SCL	Sclavo, Inc.	TRUE	
SOL	Solvay Pharmaceuticals	TRUE	
SI	Swiss Serum and Vaccine Inst.	FALSE	
TAL	Talecris Biotherapeutics	TRUE	includes Bayer Biologicals
JPN	The Research	TRUE	

	Foundation for Microbial Diseases of Osaka University (BIKEN)		
USA	United States Army Medical Research and Material Command	TRUE	
UNK	Unknown manufacturer	TRUE	
VXG	VaxGen	TRUE	
WA	Wyeth-Ayerst	FALSE	
WAL	Wyeth-Ayerst	FALSE	includes Wyeth-Lederle Vaccines and Pediatrics, Wyeth Laboratories, Lederle Laboratories, and Praxis Biologics, acquired by Pfizer 10/15/2009
ZLB	ZLB Behring	FALSE	includes Aventis Behring and Armour Pharmaceutical Company, Child of CSL

User-defined Table 0288 - Census tract (use in all XAD; including PID-11)
Fields using this code set are expected to be null. For a current list of HL7 values please reference the HL7 version 2.5.1 documents.

User-defined Table 0289 - County/parish (use in all XAD; including PID-11)
A complete list of FIPS 6-4 county codes is available at <www.itl.nist.gov/div897/pubs/fip6-4.htm>. According to the FIPS guidance, the 2-letter state code (available at <www.itl.nist.gov/div897/pubs/fip5-2.htm>) plus the numeric county code should be used (e.g., AZ001 represents Apache County, Arizona and AL001 represents Autauga County, Alabama).

HL7-defined Table 0292 - Codes for Vaccines administered (code=CVX) (use in RXA-5)
The table below represents the February 2010 version of the CVX code set. New codes are added as needed; therefore, see the most current version of this code set at the website Web site: http://www.cdc.gov/vaccines/programs/iis/stds/cvx.htm[34]
The CDC's National Center for Immunization and Respiratory Diseases (NCIRD) maintains the HL7 external code set CVX.

CVX – Vaccines Administered

Vaccine Name	Long Name	CVX code	Current Status
adenovirus, NOS	adenovirus vaccine, NOS	82	Inactive
adenovirus, type 7	adenovirus vaccine, type 7, live, oral	55	Inactive
adenovirus, type 4	adenovirus vaccine, type 4, live, oral	54	Inactive
anthrax	anthrax vaccine	24	Active
BCG	Bacillus Calmette-Guerin vaccine	19	Active
botulinum antitoxin	botulinum antitoxin	27	Inactive
cholera	cholera vaccine	26	Inactive
CMVIG	cytomegalovirus immune globulin, intravenous	29	Active
dengue fever	dengue fever vaccine	56	Inactive
diphtheria antitoxin	diphtheria antitoxin	12	Inactive
DT (pediatric)	diphtheria and tetanus toxoids, adsorbed for pediatric use	28	Active
DTaP	diphtheria, tetanus toxoids and acellular pertussis vaccine	20	Active
DTaP, 5 pertussis antigens	diphtheria, tetanus toxoids and acellular pertussis vaccine, 5 pertussis antigens	106	Active
DTaP, NOS	diphtheria, tetanus toxoids and acellular pertussis vaccine, NOS	107	Inactive
DTaP-Hep B-IPV	DTaP-hepatitis B and poliovirus vaccine	110	Active
DTaP-Hib	DTaP-Haemophilus influenzae type b conjugate vaccine	50	Active
DTaP-Hib-IPV	diphtheria, tetanus toxoids	120	Active

[34] Link is current as of 5/1/2010.

	and acellular pertussis vaccine, Haemophilus influenzae type b conjugate, and poliovirus vaccine, inactivated (DTaP-Hib-IPV)		
DTaP-IPV	Diphtheria, tetanus toxoids and acellular pertussis vaccine, and poliovirus vaccine, inactivated	130	Active
DTP	diphtheria, tetanus toxoids and pertussis vaccine	1	Inactive
DTP-Hib	DTP-Haemophilus influenzae type b conjugate vaccine	22	Inactive
DTP-Hib-Hep B	DTP- Haemophilus influenzae type b conjugate and hepatitis b vaccine	102	Inactive
hantavirus	hantavirus vaccine	57	Inactive
HBIG	hepatitis B immune globulin	30	Active
Hep A, adult	hepatitis A vaccine, adult dosage	52	Active
Hep A, NOS	hepatitis A vaccine, NOS	85	Inactive
Hep A, ped/adol	hepatitis A vaccine, pediatric/adolescent dosage, 2 dose schedule	83	Active
Hep A, ped/adol, 3 dose	hepatitis A vaccine, pediatric/adolescent dosage, 3 dose schedule	84	Inactive
Hep A, pediatric, NOS	hepatitis A vaccine, pediatric dosage, NOS	31	Inactive
Hep A-Hep B	hepatitis A and hepatitis B vaccine	104	Active
Hep B, adolescent or pediatric	hepatitis B vaccine, pediatric or pediatric/adolescent dosage	8	Active
Hep B, adolescent/high risk infant	hepatitis B vaccine, adolescent/high risk infant dosage	42	Inactive
Hep B, adult	hepatitis B vaccine, adult dosage	43	Active
Hep B, dialysis	hepatitis B vaccine, dialysis patient dosage	44	Active
Hep B, NOS	hepatitis B vaccine, NOS	45	Inactive

Hep C	hepatitis C vaccine	58	Inactive
Hep E	hepatitis E vaccine	59	Inactive
herpes simplex 2	herpes simplex virus, type 2 vaccine	60	Inactive
Hib (HbOC)	Haemophilus influenzae type b vaccine, HbOC conjugate	47	Inactive
Hib (PRP-D)	Haemophilus influenzae type b vaccine, PRP-D conjugate	46	Inactive
Hib (PRP-OMP)	Haemophilus influenzae type b vaccine, PRP-OMP conjugate	49	Active
Hib (PRP-T)	Haemophilus influenzae type b vaccine, PRP-T conjugate	48	Active
Hib, NOS	Haemophilus influenzae type b vaccine, conjugate NOS	17	Inactive
Hib-Hep B	Haemophilus influenzae type b conjugate and Hepatitis B vaccine	51	Active
HIV	human immunodeficiency virus vaccine	61	Inactive
HPV, bivalent	human papilloma virus vaccine, bivalent	118	Active
HPV, quadrivalent	human papilloma virus vaccine, quadrivalent	62	Active
IG	immune globulin, intramuscular	86	Active
IG, NOS	immune globulin, NOS	14	Active
IGIV	immune globulin, intravenous	87	Active
influenza, H5N1-1203	influenza virus vaccine, H5N1, A/Vietnam/1203/2004 (national stockpile)	123	Inactive
influenza, live, intranasal	influenza virus vaccine, live, attenuated, for intranasal use	111	Active
influenza, NOS	influenza virus vaccine, NOS8	88	Active
Influenza, seasonal, high dose	Japanese Encephalitis vaccine for intramuscular administration	134	Active
influenza, split (incl. purified surface antigen)	influenza virus vaccine, split virus (incl. purified surface antigen)	15	Active
influenza, whole	influenza virus vaccine, whole virus	16	Inactive
IPV	poliovirus vaccine, inactivated	10	Active

Japanese encephalitis	Japanese Encephalitis Vaccine SC	39	Active
Junin virus	Junin virus vaccine	63	Inactive
leishmaniasis	leishmaniasis vaccine	64	Inactive
leprosy	leprosy vaccine	65	Inactive
Lyme disease	Lyme disease vaccine	66	Inactive
M/R	measles and rubella virus vaccine	4	Active
malaria	malaria vaccine	67	Active
measles	measles virus vaccine	5	Active
melanoma	melanoma vaccine	68	Inactive
meningococcal C conjugate	meningococcal C conjugate vaccine	103	Active
meningococcal MCVP4	meningococcal polysaccharide (groups A, C, Y and W-135) diphtheria toxoid conjugate vaccine (MCV4)	114	Active
meningococcal MPSV4	meningococcal polysaccharide vaccine (MPSV4)	32	Active
meningococcal, NOS	meningococcal vaccine, NOS	108	Active
MMR	measles, mumps and rubella virus vaccine	3	Active
MMRV	measles, mumps, rubella, and varicella virus vaccine	94	Active
mumps	mumps virus vaccine	7	Active
OPV	poliovirus vaccine, live, oral	2	Inactive
parainfluenza-3	parainfluenza-3 virus vaccine	69	Inactive
pertussis	pertussis vaccine	11	Inactive
plague	plague vaccine	23	Active
Pneumococcal conjugate PCV 13	pneumococcal conjugate vaccine, 13 valent	133	Active
pneumococcal conjugate PCV 7	pneumococcal conjugate vaccine, 7 valent	100	Active
pneumococcal polysaccharide PPV23	pneumococcal polysaccharide vaccine	33	Active
pneumococcal, NOS	pneumococcal vaccine, NOS	109	Active
polio, NOS	poliovirus vaccine, NOS	89	Active
Q fever	Q fever vaccine	70	Inactive
rabies, intradermal injection	rabies vaccine, for intradermal injection	40	Active
rabies,	rabies vaccine, for	18	Active

intramuscular injection	intramuscular injection		
rabies, NOS	rabies vaccine, NOS	90	Inactive
rheumatic fever	rheumatic fever vaccine	72	Inactive
Rift Valley fever	Rift Valley fever vaccine	73	Inactive
RIG	rabies immune globulin	34	Active
rotavirus, monovalent	rotavirus, live, monovalent vaccine	119	Active
rotavirus, NOS	rotavirus vaccine, NOS	122	Active
rotavirus, pentavalent	rotavirus, live, pentavalent vaccine	116	Active
rotavirus, tetravalent	rotavirus, live, tetravalent vaccine	74	Inactive
RSV-IGIV	respiratory syncytial virus immune globulin, intravenous	71	Active
RSV-MAb	respiratory syncytial virus monoclonal antibody (palivizumab), intramuscular	93	Active
rubella	rubella virus vaccine	6	Active
rubella/mumps	rubella and mumps virus vaccine	38	Active
Staphylococcus bacterio lysate	Staphylococcus bacteriophage lysate	76	Inactive
Td (adult)	tetanus and diphtheria toxoids, adsorbed for adult use	9	Active
Td (adult) preservative free	tetanus and diphtheria toxoids, adsorbed, preservative free, for adult use	113	Active
Tdap	tetanus toxoid, reduced diphtheria toxoid, and acellular pertussis vaccine, adsorbed	115	Active
tetanus toxoid	tetanus toxoid, adsorbed	35	Active
tetanus toxoid, NOS	tetanus toxoid, NOS	112	Active
tick-borne encephalitis	tick-borne encephalitis vaccine	77	Inactive
TIG	tetanus immune globulin	13	Active
TST, NOS	tuberculin skin test; NOS	98	Inactive
TST-OT tine test	tuberculin skin test; old tuberculin, multipuncture	95	Inactive

	device		
TST-PPD intradermal	tuberculin skin test; purified protein derivative solution, intradermal	96	Inactive
TST-PPD tine test	tuberculin skin test; purified protein derivative, multipuncture device	97	Inactive
tularemia vaccine	tularemia vaccine	78	Inactive
typhoid, NOS	typhoid vaccine, NOS	91	Inactive
typhoid, oral	typhoid vaccine, live, oral	25	Active
typhoid, parenteral	typhoid vaccine, parenteral, other than acetone-killed, dried	41	Active
typhoid, parenteral, AKD (U.S. military)	typhoid vaccine, parenteral, acetone-killed, dried (U.S. military)	53	Active
typhoid, ViCPs	typhoid Vi capsular polysaccharide vaccine	101	Active
vaccinia (smallpox)	vaccinia (smallpox) vaccine	75	Active
vaccinia (smallpox) diluted	vaccinia (smallpox) vaccine, diluted	105	Inactive
vaccinia immune globulin	vaccinia immune globulin	79	Active
varicella	varicella virus vaccine	21	Active
VEE, inactivated	Venezuelan equine encephalitis, inactivated	81	Active
VEE, live	Venezuelan equine encephalitis, live, attenuated	80	Active
VEE, NOS	Venezuelan equine encephalitis vaccine, NOS	92	Active
VZIG	varicella zoster immune globulin	36	Active
VZIG (IND)	varicella zoster immune globulin (Investigational New Drug)	117	Inactive
yellow fever	yellow fever vaccine	37	Active
zoster	zoster vaccine, live	121	Active
no vaccine administered	no vaccine administered	998	Inactive
RESERVED - do not use	RESERVED - do not use	99	Inactive
unknown	unknown vaccine or immune	999	Inactive

	globulin		

User-defined Table 0296 - Language
ISO 639 shall be used for Language. It is available from PHIN-VADS at:
http://phinvads.cdc.gov/vads/ViewValueSet.action?id=43D34BBC-617F-DD11-B38D-00188B398520#

The code used from HL70396 table is ISO6392.

Example codes are found in the table below.

Note that this code differs from the 2.3.1 Guide, which used the 2 character codes.

Value	Description
ara	Arabic
arm	Armenian
cat	Catalan; Valencian
chi	Chinese
dan	Danish
eng	English
fre	French
ger	German
hat	Haitian; Haitian Creole
heb	Hebrew
hin	Hindi
hmn	Hmong
jpn	Japanese
kor	Korean
rus	Russian
som	Somali
spa	Spanish; Castilian
vie	Vietnamese

User-defined Table 0297 - CN ID source (use in all XCN data types) [locally-defined]

User-defined Table 0300 - Namespace ID (use in all EI, HD data types)
[locally-defined]

HL7-defined Table 0301 - Universal ID type (use in all HD data types)

Value	Description
DNS	An Internet dotted name -- either in ASCII or as integers.

GUID	Same as UUID.
HCD	The CEN Healthcare Coding Scheme Designator. (Identifiers used in DICOM follow this assignment scheme.)
HL7	Reserved for future HL7 registration schemes.
ISO	An International Standards Organization Object Identifier.
L,M,N	These are reserved for locally defined coding schemes.
Random	Usually a base64 encoded string of random bits. The uniqueness depends on the length of the bits. Mail systems often generate ASCII string "unique names," from a combination of random bits and system names. Obviously, such identifiers will not be constrained to the base64 character set.
UUID	The DCE Universal Unique Identifier.
x400	An X.400 MHS format identifier.
x500	An X.500 directory name.

HL7-defined Table 0322 - Completion status (use in RXA-20)

Value	Description
CP	Complete
RE	Refused
NA	Not Administered
PA	Partially Administered

HL7-defined Table 0323 - Action code (use in RXA-21)

Value	Description
A	Add
D	Delete
U	Update

HL7-defined Table 0354 - Message structure [only selected values listed] (use in MSH-9, third component)

Value	Events
ACK	ACK
QBP_Q11	QBP
RSP_K11	RSP
VXU_V04	VXU

HL7-defined Table 0356 - Alternate character set handling scheme (use in MSH-20)
Fields using this code set are expected to be null. For a current list of HL7 values please reference the HL7 version 2.5.1 documents.

HL7-defined Table 0357 - Message error status codes (use in ERR-3)

Status code	Status text	Description/Comment
Success		
0	Message accepted	Success. Optional, as the AA conveys this. Used for systems that must always return a status code.
Error status codes		
100	Segment sequence error	The message segments were not in the proper order or required segments are missing.
101	Required field missing	A required field is missing from the segment.
102	Data type error	The field contained data of the wrong data type, e.g., an NM field contained letters of the alphabet.
103	Table value not found	A field of data type ID or IS was compared against the corresponding table, and no match was found.
Rejection status codes		
200	Unsupported message type	The Message type is not supported.
201	Unsupported event code	The Event Code is not supported.
202	Unsupported processing ID	The Processing ID is not supported.
203	Unsupported version ID	The Version ID is not supported.
204	Unknown key identifier	The ID of the patient, order, etc. was not found. Used for transactions *other* than additions, e.g., transfer of a non-existent patient.
205	Duplicate key identifier	The ID of the patient, order, etc. already exists. Used in response to addition transactions (Admit, New Order, etc.).

Status code	Status text	Description/Comment
206	Application record locked	The transaction could not be performed at the application storage level, e.g., database locked.
207	Application internal error	A catchall for internal errors not explicitly covered by other codes.

User-defined Table 0360 - Degree Selected values suggested by HL7. ; (use in all XPN data types, including PID-5, 6, 9)

Value	Description
PN	*Advanced Practice Nurse*
AA	Associate of Arts
AS	Associate of Science
BA	Bachelor of Arts
BN	Bachelor of Nursing
BS	Bachelor of Science
BSN	*Bachelor of Science in Nursing*
CER	Certificate
CANP	*Certified Adult Nurse Practitioner*
CMA	*Certified Medical Assistant*
CNP	*Certified Nurse Practitioner*
CNM	*Certified Nurse Midwife*
CNA	*Certified Nurse's Assistant*
CRN	*Certified Registered Nurse*
CNS	*Certified Nurse Specialist*
CPNP	*Certified Pediatric Nurse Practitioner*
DIP	Diploma
PHD	Doctor of Philosophy
MD	Doctor of Medicine
DO	Doctor of Osteopathy
EMT	*Emergency Medical Technician*
EMT-P	*Emergency Medical Technician – Paramedic*
FPNP	*Family Practice Nurse Practitioner*
HS	High School Graduate
JD	Juris Doctor
LPN	*Licensed Practical Nurse*
MA	Master of Arts
MBA	Master of Business Administration
MPH	*Master of Public Health*
MS	Master of Science
MSN	*Master of Science – Nursing*
MDA	*Medical Assistant*
MT	*Medical Technician*
NG	Non-Graduate
NP	*Nurse Practitioner*
PharmD	*Doctor of Pharmacy*
PA	*Physician Assistant*

Value	Description
PHN	*Public Health Nurse*
RMA	*Registered Medical Assistant*
RN	*Registered Nurse*
RPH	*Registered Pharmacist*
SEC	Secretarial Certificate
TS	Trade School Graduate

User-defined Table 0361 – Application
No suggested values defined.

User-defined Table 0362 – Facility
No suggested values defined.

User-defined Table 0363 – Assigning Authority
No suggested values defined.

User-defined Table 0396 – Coding system [only selected values listed] See Version 2.5.1 Table 0396 for other values. (Use in CE data types to denote the coding system used for coded values)

Value	Description
99zzz or L	Local general code (where z is an alphanumeric character)
ART	WHO Adverse Reaction Terms
C4	CPT-4
C5	CPT-5
CDCA	CDC Analyte Codes
CDCM	CDC Methods/Instruments Codes
CDCPHINVS	PHIN VS (CDC Local Coding System)
CDS	CDC Surveillance
CPTM	CPT Modifier Code
CST	COSTART
CVX	CDC Vaccine Codes
E	EUCLIDES
E5	Euclides quantity codes
E6	Euclides Lab method codes
E7	Euclides Lab equipment codes
ENZC	Enzyme Codes
HB	HIBCC
HCPCS	HCFA Common Procedure Coding System
HHC	Home Health Care
HL7nnnn	HL7 Defined Codes where nnnn is the HL7 table number
HPC	HCFA Procedure Codes (HCPCS)
I10	ICD-10
I10P	ICD-10 Procedure Codes

Value	Description
I9	ICD9
I9C	ICD-9CM
ISOnnnn	ISO Defined Codes where nnnn is the ISO table number
LB	Local billing code
LN	Logical Observation Identifier Names and Codes (LOINC®)
MCD	Medicaid
MCR	Medicare
MEDR	Medical Dictionary for Drug Regulatory Affairs (MEDDRA)
MVX	CDC Vaccine Manufacturer Codes
NDC	National drug codes
NPI	National Provider Identifier
SNM	Systemized Nomenclature of Medicine (SNOMED®)
SCT	SNOMED Clinical Terminology
SCT2	SNOMED Clinical Terms alphanumeric codes
SNM3	SNOMED International
SNT	SNOMED topology codes (anatomic sites)
UML	Unified Medical Language
UPC	Universal Product Code
UPIN	UPIN
W1	WHO record # drug codes (6 digit)
W2	WHO record # drug codes (8 digit)
W4	WHO record # code with ASTM extension
WC	WHO ATC

User-defined Table 0441 - Immunization registry status (use in PD1-16) [HL7 assigned table number 0441 in Version 2.4]

Value	Description
A	Active
I	Inactive--Unspecified
L	Inactive-Lost to follow-up (cannot contact)
M	Inactive-Moved or gone elsewhere (transferred)
P	Inactive-Permanently inactive (do not re-activate or add new entries to this record)
U	Unknown

The code O (Other) has been removed, do not use

User-defined Table 0471 – Query Name

Value	Description
Z34	Request Immunization History

HL7 Table 0516 - Error Severity (use in ERR-4)

Value	Description	Comment
W	Warning	Transaction successful, but there may be issues. These may include non-fatal errors with potential for loss of data.
I	Information	Transaction successful, but includes returned information.
E	Error	Transaction was not successful.

User-defined Table 0533 – Application Error Code

There are no suggested values for this code. Local implementations need to create a table of local application error codes.

NIP-defined NIP001 - Immunization information source (use in RXA-9)

Value	Description
00	New immunization record
01	Historical information - source unspecified
02	Historical information - from other provider
03	Historical information - from parent's written record
04	Historical information - from parent's recall
05	Historical information - from other registry
06	Historical information - from birth certificate
07	Historical information - from school record
08	Historical information - from public agency

NIP-defined NIP002 - Substance refusal reason (use in RXA-18)

Value	Description
00	*Parental decision*
01	*Religious exemption*
02	*Other (must add text component of the CE field with description)*
03	*Patient decision*

NIP-defined NIP003 - Observation identifiers (use in OBX-3)[35]

LOINC® Code	Description	Corresponding data type (indicate in OBX-2)	Corresponding observation value ***EXAMPLE*** OR code table to use (value in OBX-5)
Vaccine Funding Source – Use in OBX-3 to indicate that OBX-5 will contain the funding source for a given immunization.			
30963-3	Vaccine funding source	(CE)	Value Set OID - 2.16.840.1.114222.4.11.3287 **Value Set Code:: PHVS_ImmunizationFundingSource_IIS**
Vaccine Type Identifier			
30956-7	Vaccine Type (Vaccine group or family)	(CE)	HL70292 (CVX codes – use the codes described as "NOS" as needed.)
38890-0	Component Vaccine Type	(CE)	HL70292 (CVX codes – use the codes described as "NOS" as needed.)
Contraindications, Precautions, Indications and Immunities			

[35] All VAERS only items removed.

30946-8	Vaccination contraindication/precaution effective date	(DT)	***19970522***
30944-3	Vaccination temporary contraindication/precaution expiration date	(DT)	***19990523***
30973-2	Vaccination contraindication/precaution	(CE)	Value Set OID - 2.16.840.1.114222.4.11.3288 **Value Set Code:: PHVS_VaccinationContraindication_IIS**
31044-1	Reaction	(CE)	Value Set OID - 2.16.840.1.114222.4.11.3289 **Value Set Code:: PHVS_VaccinationReaction_IIS**
59784-9	Disease with presumed immunity	(CE)	Value Set OID - 2.16.840.1.114222.4.11.3293 **Value Set Code:: PHVS_EvidenceOfImmunity_IIS**
59785-6	Indications to immunize	(CE)	Value Set OID - 2.16.840.1.114222.4.11.3290 **Value Set Code:: PHVS_VaccinationSpecialIndications_IIS**
Vaccine Information Statement (VIS) Dates			
29768-9	Date Vaccine Information Statement Published	(TS)	***19900605***
29769-7	Date Vaccine Information Statement Presented	(TS)	***199307311615***
Forecasting and Evaluating Immunizations			

30973-2	30973-2 -- Dose number in series	(NM)	***2***
30979-9	Vaccines due next	***(CE)***	HL70292 (CVX)
30980-7	30980-7 – Date vaccine due	***(TS)***	19980526
30981-5	30981-5 – Earliest date to give	***(TS)***	19980522
30982-3	30982-3 – Reason applied by forecast logic to project this vaccine	***(CE) or (ST)***	***Codes for forecast logic reason locally defined.***
59779-9	Immunization Schedule used	***CE***	Value Set OID - **2.16.840.1.114222.4.11.3291** **Value Set Code:: PHVS_ImmunizationScheduleIdentifier_IIS**
59780-7	Immunization Series name	***CE***	***Locally Defined***
59782-3	Number of doses in primary series	***NM***	***2***
59781-5	Dose validity	***ID***	***Y, N or empty***
59783-1	Status in immunization series	***CE***	***Locally defined value set***
Smallpox Take Read: These codes allow information about evaluation of a smallpox vaccination, called the take response.			
46249-9	VACCINATION TAKE-RESPONSE TYPE	***(ST)***	Major Take, Equivocal, Not Available
46250-7	VACCINATION TAKE-RESPONSE DATE	***(TS)***	20091221

LOINC® codes are copyright 1995-2009, Regenstrief Institute and the Logical Observation Identifier Names and Codes (LOINC®) Committee. All rights reserved.

The following NIP tables are not included in this Guide. They support VAERS reporting, which not within the scope of this Guide.

- **NIP 005 – Event Consequences**
- **NIP 007 – Vaccinated at Location**
- **NIP 008 – Vaccine purchased with Funds**
- **NIP 009 – Adverse event previously reported**
- **NIP 010 – Report type**

The following value sets replace a number of NIP tables. These have been registered in the CDC local value set, CDCPHINVS. Where appropriate, existing codes are used. For

example SNOMED codes are used for some contraindications. Local codes (VXCxx) will be replaced as new SNOMED codes are published.

Value Set Name – Immunization Funding Source (Used in OBX- 5)

Value Set OID - 2.16.840.1.114222.4.11.3287

Value Set Code:: PHVS_ImmunizationFundingSource_IIS

Value set definition: Indicates funding source for an immunization.

Code Set OID:

NULLFL: 2.16.840.1.113883.5.1008

CDCPHINVS: 2.16.840.1.114222.4.5.274

Local implements may expand this list.

Concept Code	Concept Name	Definition	HL7 Table 0396 Code	V 2.3.1 Value NIP008
PHC70	Private funds	Immunization was funded by private funds, including insurance.	CDCPHINVS	PVF
VXC1	Federal funds	Immunization was funded with public funds from the federal government.	CDCPHINVS	
VXC2	State funds	Immunization was funded with public funds from a state.	CDCPHINVS	
PHC68	Military funds	Immunization was paid for with military funds.	CDCPHINVS	MLF
VXC3	Tribal funds	Immunization was paid for with tribal funds.	CDCPHINVS	
OTH	Other	Immunization was paid for by funding not listed above.	NULLFL	OTH
UNK	Unspecified	Funding source for immunization is not specified.	NULLFL	

Examples:

|PHC70^Private funds^CDCPHINVS|

|OTH^Other^NULLFL|

NIP-defined NIP004 - Contraindications, Precautions, and Immunities

This table has been replaced by separate tables for contraindications, indications, reactions and immunities

Value Set Name – Vaccination Contraindications (Used in OBX- 5)

Value Set OID - 2.16.840.1.114222.4.11.3288

Value Set Code:: PHVS_VaccinationContraindication_IIS

Value set definition: indicates a contraindication to vaccination.

Code Set OID:

SNOMED: 2.16.840.1.113883.6.96

CDCPHINVS: 2.16.840.1.114222.4.5.274

Concept Code	Concept Name	Definition	HL7 Table 0396 Code	V 2.3.1 Value NIP004
VXC16	allergy (anaphylactic) to proteins of rodent or neural origin	allergy (anaphylactic) to proteins of rodent or neural origin	CDCPHINVS	
VXC17	allergy (anaphylactic) to 2-phenoxyethanol	allergy (anaphylactic) to 2-phenoxyethanol	CDCPHINVS	
VXC18	allergy to baker's yeast (anaphylactic)	allergy to baker's yeast (anaphylactic)	CDCPHINVS	03
91930004	Allergy to eggs (disorder)	allergy to egg ingestion (anaphylactic)	SCT	04
294847001	Gelatin allergy (disorder)	allergy to gelatin (anaphylactic)	SCT	05
294468006	Neomycin allergy (disorder)	allergy to neomycin (anaphylactic)	SCT	06
294466005	Streptomycin allergy (disorder)	allergy to streptomycin (anaphylactic)	SCT	07
VXC19	allergy to thimerosal (anaphylactic)	allergy to thimerosal (anaphylactic)	CDCPHINVS	08
VXC20	allergy to previous dose of this vaccine or to any of its unlisted vaccine components (anaphylactic)	allergy to previous dose of this vaccine or to any of its unlisted vaccine components (anaphylactic)	CDCPHINVS	09
402306009	Allergy to aluminum (disorder)	allergy (anaphylactic) to alum	SCT	
300916003	Latex allergy (disorder)	allergy (anaphylactic) to latex	SCT	
294530006	Polymyxin B allergy (disorder)	allergy (anaphylactic) to polymycin B	SCT	
VXC21	Previous history of intussusception	Previous history of intussusception	CDCPHINVS	
VXC22	encephalopathy within 7 days of previous dose of DTP or DTaP	encephalopathy within 7 days of previous dose of DTP or DTaP	CDCPHINVS	15
VXC23	current fever with moderate-to-severe illness	current fever with moderate-to-severe illness	CDCPHINVS	16

Concept Code	Concept Name	Definition	HL7 Table 0396 Code	V 2.3.1 Value NIP004
VXC24	current acute illness, moderate to severe (with or without fever) (e.g., diarrhea, otitis media, vomiting)	current acute illness, moderate to severe (with or without fever) (e.g., diarrhea, otitis media, vomiting)	CDCPHINVS	21
27624003	Chronic disease (disorder)	chronic illness (e.g., chronic gastrointestinal disease)	SCT	22
VXC25	History of Arthus hypersensitivity reaction to a tetanus-containing vaccine administered < 10 yrs previously	History of Arthus hypersensitivity reaction to a tetanus-containing vaccine administered < 10 yrs previously	CDCPHINVS	
VXC26	underlying unstable, evolving neurologic disorders, (including seizure disorders, cerebral palsy, and developmental delay)	underlying unstable, evolving neurologic disorders, (including seizure disorders, cerebral palsy, and developmental delay)	CDCPHINVS	37
VXC27	immunodeficiency due to any cause, including HIV (hematologic and solid tumors, congenital immunodeficiency, long-term immunosuppressive therapy, including steroids)	immunodeficiency due to any cause, including HIV (hematologic and solid tumors, congenital immunodeficiency, long-term immunosuppressive therapy, including steroids)	CDCPHINVS	36
VXC28	underlying unstable, evolving neurologic disorders, (including seizure disorders, cerebral palsy, and developmental delay)	underlying unstable, evolving neurologic disorders, (including seizure disorders, cerebral palsy, and developmental delay)	CDCPHINVS	37
77386006	Patient currently pregnant (finding)	pregnancy (in recipient)	SCT	39
302215000	Thrombocytopenic disorder (disorder)	thrombocytopenia	SCT	40
161461006	History of - purpura (situation)	thrombocytopenic purpura (history)	SCT	41

Examples:

|VXC18^allergy to bakers yeast^CDCPHINVS|

|77386006^patient currently pregnant^SCT|

Value Set Name – Vaccination Reaction - IIS (Used in OBX- 5)
Value Set OID - 2.16.840.1.114222.4.11.3289
Value Set Code:: PHVS_VaccinationReaction_IIS
Value set definition: indicates a reaction or adverse event associate in time with an immunization.

Code Set OID:
SNOMED: 2.16.840.1.113883.6.96

CDCPHINVS: 2.16.840.1.114222.4.5.274

Concept Code	Concept Name	Definition	HL7 Table 0396 Code	V 2.3.1 Value NIP004
39579001	Anaphylaxis (disorder)	Anaphylaxis	SCT	
81308009	Disorder of brain (disorder)	Encephalopathy	SCT	
VXC9	persistent, inconsolable crying lasting > 3 hours within 48 hours of dose	persistent, inconsolable crying lasting > 3 hours within 48 hours of dose	CDCPHINVS	
VXC10	collapse or shock-like state within 48 hours of dose	collapse or shock-like state within 48 hours of dose	CDCPHINVS	
VXC11	convulsions (fits, seizures) within 72 hours of dose	convulsions (fits, seizures) within 72 hours of dose	CDCPHINVS	
VXC12	fever of >40.5C (105F) within 48 hours of dose	fever of >40.5C (105F) within 48 hours of dose	CDCPHINVS	
VXC13	Guillain-Barre syndrome (GBS) within 6 weeks of dose	Guillain-Barre syndrome (GBS) within 6 weeks of dose	CDCPHINVS	
VXC14	Rash within 14 days of dose	Rash within 14 days of dose	CDCPHINVS	
VXC15	Intussusception within 30 days of dose	Intussusception within 30 days of dose	CDCPHINVS	

Examples:

|39579001^anaphylaxis^SCT|

|VXC14^Rash within 14 days^CDCPHINVS|

Value Set Name – Vaccination Special Indications - IIS (Used in OBX- 5)

Value Set OID - 2.16.840.1.114222.4.11.3290

Value Set Code:: PHVS_VaccinationSpecialIndications_IIS

Value set definition: Describes a factor about the client which may impact forecasting of next dose of vaccine needed.

Code Set OID:
CDCPHINVS: 2.16.840.1.114222.4.5.274

Concept Code	Concept Name	Definition	HL7 Table 0396 Code	V 2.3.1 Value
VXC7	Rabies exposure within previous 10 days.	Rabies exposure within previous 10 days.	CDCPHINVS	
VXC8	Member of special group	Member of special group	CDCPHINVS	

Example:

|VXC7^Rabies exposure^CDCPHINVS|

Value Set Name – Immunization Profile Identifiers - IIS (Used in MSH-21)

Value Set OID - 2.16.840.1.114222.4.11.3291

Value Set Code:: PHVS_ImmunizationProfileIdentifier_IIS

Value set definition: Identifies the profile used by the message.

Code Set OID:
CDCPHINVS: 2.16.840.1.114222.4.5.274

Concept Code	Concept Name	Definition	HL7 Table 0396 Code	V 2.3.1 Value
Z31	Return Candidate Clients	Return Candidate Clients	CDCPHINVS	
Z32	Return Immunization History	Return Immunization History	CDCPHINVS	
Z34	Request Immunization History	Request Immunization History	CDCPHINVS	

Example:

|Z34^ CDCPHINVS|

Value Set Name – Immunization Schedule Identifiers - IIS (Used in OBX-5)

Value Set OID - 2.16.840.1.114222.4.11.3291
Value Set Code:: PHVS_ImmunizationScheduleIdentifier_IIS
Value set definition: Identifies the schedule used for immunization evaluation and forecast.

Code Set OID:
CDCPHINVS: 2.16.840.1.114222.4.5.274

Concept Code	Concept Name	Definition	HL7 Table 0396 Code	V 2.3.1 Value
VXC16	ACIP Schedule	This indicates that the current ACIP Schedule of recommendations were used to forecast next doses due.	CDCPHINVS	

Example:

|VXC16^ACIP Schedule^CDCPHINVS|
Local Implementations may add local codes for local schedules. In order to do this, the local implementation guide should publish the code in a local table. The code system identifier (CDCPHINVS use above is an example) needs to be included in a local copy of Table 0396. See first row for example. The local schedule code should be recorded as follows:

|yourLocalcode^your schedule name here^99xxx|

The 99xxx is the local code table identifier. Xxx are alpha characters.

Value Set Name – Evidence of Immunity - IIS (Used in OBX- 5)
Value Set OID - 2.16.840.1.114222.4.11.3293
Value Set Code:: PHVS_EvidenceOfImmunity_IIS
Value set definition: Evidence of immunity indicates that a person has plausible evidence that they have already developed immunity to a particular disease. The definition of plausible evidence is a local decision, but best practice would suggest that serological evidence of immunity is the strongest indicator of immunity.

Code Set OID:
SNOMED: 2.16.840.1.113883.6.96

Concept Code	Concept Name	Definition	HL7 Table 0396 Code	V 2.3.1 Value NIP004
409498004	Anthrax (disorder)	History of anthrax infection.	SCT	
397428000	Diphtheria (disorder)	History of diphteria infection.	SCT	24
76902006	Tetanus (disorder)	History of tetanus infection.	SCT	32
27836007	Pertussis (disorder)	History of pertussis infection.	SCT	29
40468003	Viral hepatitis, type A (disorder)	History of Hepatitis A infection.	SCT	
66071002	Type B viral hepatitis (disorder)	History of Hepatitis B infection.	SCT	26
91428005	Haemophilus influenzae infection (disorder)	History of HIB infection.	SCT	25
240532009	Human papilloma virus infection (disorder)	History of HPV infection.	SCT	
6142004	Influenza (disorder)	History of influenza infection.	SCT	
52947006	Japanese encephalitis virus disease (disorder)	History of Japanese encephalitis infection.	SCT	
14189004	Measles (disorder)	History of measles infection.	SCT	27
36989005	Mumps (disorder)	History of mumps infection.	SCT	28
36653000	Rubella (disorder)	History of rubella infection.	SCT	31
23511006	Meningococcal infectious disease (disorder)	History of meningococcal infection.	SCT	
16814004	Pneumococcal infectious disease (disorder)	History of pneumococcal infection.	SCT	
398102009	Acute	History of polio infection.	SCT	30

Concept Code	Concept Name	Definition	HL7 Table 0396 Code	V 2.3.1 Value NIP004
	poliomyelitis (disorder)			
14168008	Rabies (disorder)	History of rabies infection.	SCT	
18624000	Disease due to Rotavirus (disorder)	History of rotavirus infection.	SCT	
4834000	Typhoid fever (disorder)	History of typhoid infection.	SCT	
111852003	Vaccinia (disorder)	History of vaccinia infection.	SCT	
38907003	Varicella (disorder)	History of Varicella infection.	SCT	
16541001	Yellow fever (disorder)	History of yellow fever infection.	SCT	

Examples:

|38907003^Varicella infection^SCT|

Appendix B – Guidance on Usage and Example Messages

Revision History		
Author	**Revision**	**Date**
Rob Savage	Release 1	5/1/2010

Immunization History Definition

Table 10-Immunization History Definition

An immunization history consists of the following components:		
Data Element	**NVAC[36] Core Data Element[37]**	**HL7 Message Location**
Client identifiers		
ID[38]	Optional	PID-3
Name	Required	PID-5
Mother's maiden name	Required	PID-6
Client demographics		
Race	Required	PID-10
Ethnicity	Required	PID-22
Gender	Required	PID-8
Birth date	Required	PID-7
Death date	N/A[39]	PID-29
Birth order	Required	PID-24
Multiple Birth Indicator	N/A	PID-25
Birth State	Required	PID-11
Birth facility	Optional	
Client locators		
address	Optional	PID-11
phone (and email)	Optional	PID-13
Client IIS status (MOGE)	Optional	PD1-16
Client eligibility for vaccine funding (VFC)	Optional	PV1-20
Client primary language	Optional	PID-15
Client privacy request (protection of information)	N/A	PD1-12
Client desires on being contacted for reminders	N/A	PD1-11
Next of kin name, address and phone number	Optional	NK1 Segment
History of vaccine preventable	Optional	OBX segment

[36] National Vaccine Advisory Committee
[37] Required means that a system must be able to store if known. Optional means that a system should be able to store if known.
[38] ID is a list of all important identifiers like IIS id, medical record number, birth registration number and SSN.
[39] N/A indicates that it is not currently in the NVAC core data elements,

An immunization history consists of the following components:		
Data Element	**NVAC[36] Core Data Element[37]**	**HL7 Message Location**
disease such as Varicella		
Immunization records		RXA segment
Vaccine	Required	RXA-5
Vaccine lot	Required	RXA-15
Vaccination date	Required	RXA-4
Quantity	N/A	RXA-6 and RXA-7
Vaccine provider Administering Organization Ordering clinician Clinic site of administration	Optional	 RXA-10 ORC-12 RXA-11
Manufacturer	Required	RXA-17
Vaccine information sheet date	N/A	OBX segment
Injection site	Optional	RXR-2
Administration route	N/A	RXR-1
Vaccine Expiration Date	Optional	RXA-16
Funding source	N/A	OBX segment
Record source (historical indicator)	Optional	RXA-9
Reactions to vaccination	N/A	OBX segment
Refusal of vaccination	N/A	RXA-18 and RXA-20
Client conditions that impact forecasting and dose validation	N/A	OBX Segment
Next dose forecast	N/A	OBX Segment
Validation of recorded dose based on schedule recommendations	N/A	OBX Segment

Send Immunization History (VXU)

Business Process

The following activity diagram illustrates the process of sending and receiving an immunization history. It is meant to be illustrative and not prescriptive. With the

exception of the HL7 message structure processing and the return of an acknowledgement, the activities are based on local business rules. These rules must be documented for smooth interoperability. HL7 only addresses the messages, VXU and ACK.

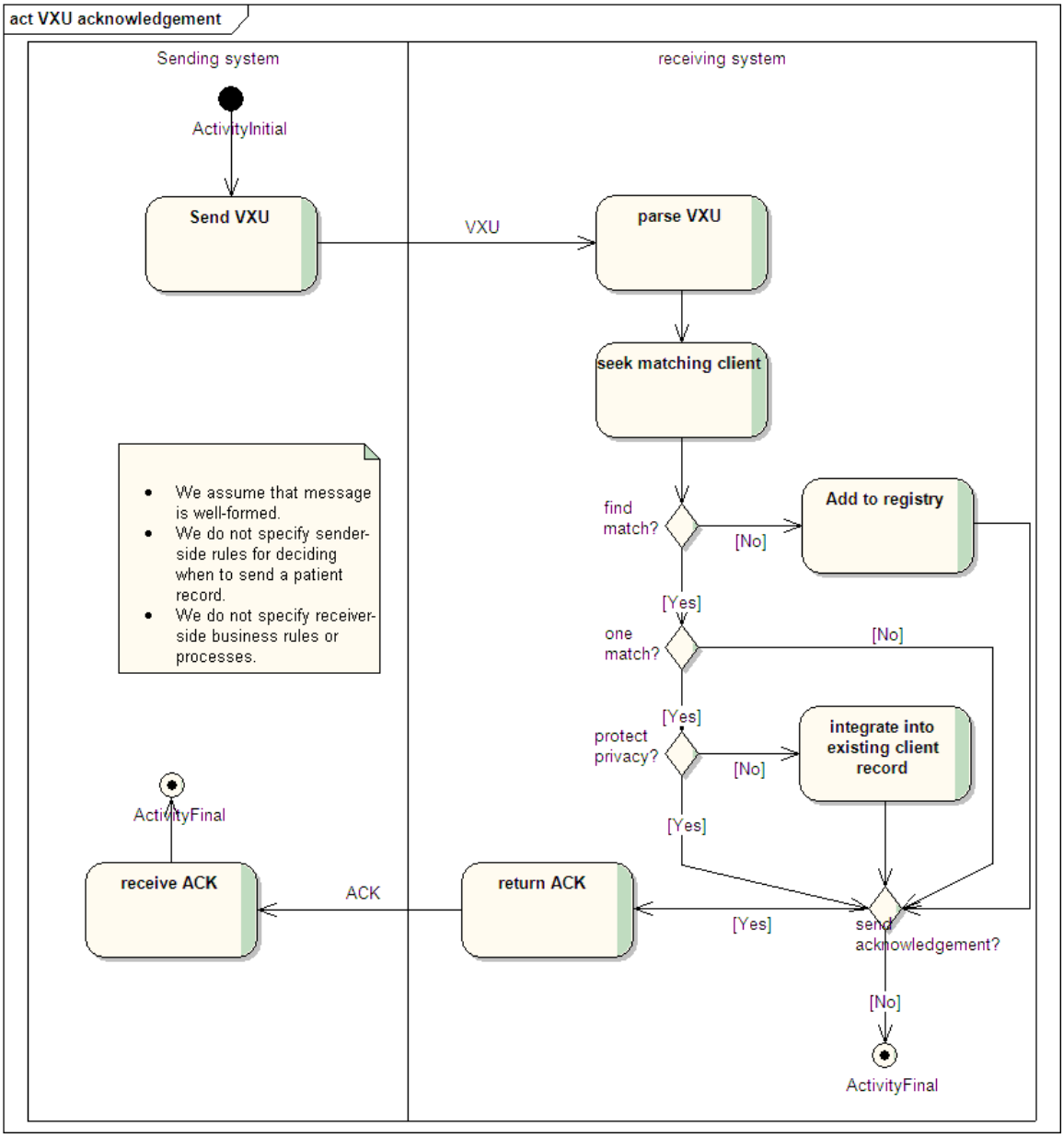

Figure 6-VXU Business Process

1. The process for sending a VXU (Immunization history) begins with the sending system building the VXU message.
2. The sending system connects to the receiving system and sends the VXU.
3. The receiving system accepts the message.
4. The receiving system parses the message and validates.

    a. Determine if message meets HL7 rules
    b. Validate based on local business rules[40]
5. Seek matching client in receiver data base
    a. No match is found[41]
        i. Add the client to the receiver database.
        ii. Send acknowledgement message[42]
    b. Exactly one match found
        i. Determine if client in receiver data base has indicated that his/her data is to be protected (protection indicator = Y)[43]
        ii. Protection indicator = Y
            1. Do not integrate record into receiver data base
            2. Send acknowledgement[44]
        iii. Protection indicator = N
            1. Based on local business rules, integrate incoming record into receiver data base.
            2. Send acknowledgement
    c. More than one match found
        i. Send acknowledgement[45]
6. Send acknowledgment to sending system
7. Sending system accepts acknowledgement message.[46]

Note that sending system may indicate that it does not accept acknowledgement messages. In this case, no acknowledgement is returned. This is not recommended.

It is expected that a client's immunization history is the complete history known to the sending system, and not just updates on new information in the sending system. While some systems may send updates only, the receiving system should make no assumptions about this. This has important implications for processing those incoming records. At the same time, the sending system may not know of all immunizations, so receiving system must have a process for integrating the received data into an existing record. The Modeling Immunization Registry Operations Workgroup (MIROW) has

[40] See Send Error in ACK for dealing with errors if either of these two tasks identifies problems.
[41] Local business rules determine what happens next, but we assume that it is a simple insert of the client record. The receiving system may require review and confirmation prior to insertion. Other systems may choose to require human review before adding to data base.
[42] See Send Acknowledgement with no error.
[43] Locally, this may be known as the sharing indicator. In this case, the equivalent value is sharing = N.
[44] Local business rules may vary. In general, the acknowledgement may reject the client record, but not indicate the existence of the client record in the receiver system.
[45] Local business rules will determine how the multiple matches are to be handled. The record could be put into a pending state, rejected outright, loaded in as a new record for clean up later.
[46] The sending system response to an acknowledgement message (ACK) is locally determined. Good practice would be to have a way to use the ACK to alert user to outcome and to allow trouble-shooting of problem messages.

produced a chapter of best practices on this process. This is available on the American Immunization Registry Association web site (www.immregistries.org).

The following example messages represent straightforward immunization history messages. They do not illustrate dealing with specific use cases, such as messaging reactions, client specific conditions or vaccine forecasts. Clearly, these may be components of a VXU, but will be addressed separately to simplify the messages.

It is important to reiterate here that conformant systems should be able to successfully populate and process the VXU message segments and fields identified as Required or Required but may be empty. They should be able to populate and process conditional items when the predicate conditions are met. If segments or fields are optionally repeating, they should be able to gracefully handle the repetitions. Systems that do not conform to these expectations risk missed data.

Supported Message Segments

The following table lists the segments and their usage.

Segment	Cardinality	Usage[47]	Notes
MSH	[1..1]	R	Every message begins with an MSH
PID	[1..1]	R	Every VXU requires one PID
PD1	[0..1]	RE	
NK1	[0..*]	RE	NK1 may repeat and may include the client with a relationship of self.
PV1	[0..1]	RE	
IN1	[0..1]	O	IN1-3 are not specified in this guide.
IN2	[0..1]	O	
IN3	[0..1]	O	
All of the following segments are part of the ORDER group. A VXU does not require an ORC group, allowing update of patient/client related data in the absence of updated RXA data. Each RXA does require an ORC.			
ORC	[0..*]	RE	
RXA	[1..1][48]	R	Each RXA is the child of

[47] R means it is required. RE means it is required if known/available. X means not supported in this Guide. O means optional.
[48] Each ORC must have 1 RXA and each RXA belongs to exactly 1 ORC.

			on ORC
RXR	[0..1]	RE	Each RXR is the child of one RXA
OBX	[0..*]	RE	Each OBX is the child of one RXA. Each RXA may have more than one OBX segment.
NTE	[0..1]	RE	Each NTE is the child of one OBX

Figure 7-Segment Usage

Example VXU # 1-Basic message:

Storyboard:

Johnny New Patient (male), born 4/14/09 has had 1 dose of Hep B on 4/15/09, according the record brought in by Mom (Sally Patient). They live at 123 Any Street, Somewhere, Wisconsin 54000. Nurse Sticker at Dalittle Clinic (DCS_DC), administers the following shots on 5/31/09:

- DTAP-Hep B-IPV (Pediarix) lot # xy3939 IM
- HIB (ActHIB) lot # 33k2a IM

They were all ordered by Dr Mary Pediatric who belongs to Dabig Clinical System (DCS). Mom acknowledged that his data may be shared with other providers. Johnny is eligible for Medicaid. His medical record number in Dabig Clinical System is 432155. Myron Clerk entered the information into the EHRs (MYEHR).

The information was sent from Dabig Clinical System to the State IIS

Note that we will indicate the end of each segment with a <CR>. Segments may wrap around in this document. We will insert a blank line between each segment for increased readability.

```
MSH|^~\&|MYEHR|DCS|||20090531145259||VXU^V04^VXU_V04|3533469|P|2.5.1
||||AL <CR>

PID|1||432155^^^DCS^MR||Patient^Johnny^New^^^^L||20090414150308|M|||
123 Any St^^Somewhere^WI^54000^^L<CR>

PD1||||||||||||N|20090531<CR>

NK1|1|Patient^Sally|MTH^mother^HL70063|123 Any
St^^Somewhere^WI^54000^^L<CR>

PV1|1|R||||||||||||||||||V02^20090531<CR>
```

```
ORC|RE||197023^DCS|||||||^Clerk^Myron||||||DCS^Dabig Clinical
System^StateIIS<CR>

RXA|0|1|20090415132511|20090415132511|31^Hep B Peds
NOS^CVX|999|||01^historical record^NIP0001|||||||| <CR>

ORC|RE||197027^DCS|||||||^Clerk^Myron||^Pediatric^MARY^^^^^^^L^^^^^^
^^^^^MD<CR>

RXA|0|1|20090531132511|20090531132511|48^HIB PRP-T^CVX|999|||00^new
immunization
record^NIP0001|^Sticker^Nurse|^^^DCS_DC||||33k2a||PMC^sanofi^MVX<CR>

RXR|C28161^IM^NCIT^IM^IM^HL70162|<CR>

ORC|RE||197028^DCS|||||||^Clerk^Myron||^Pediatric^MARY^^^^^^^L^^^^^^
^^^^^MD<CR>

RXA|0|1|20090531132511|20090531132511|110^DTAP-Hep B-
IPV^CVX|999|||00^new immunization
record^NIP0001|^Sticker^Nurse|^^^DCS_DC||||xy3939||SKB^GSK^MVX<CR>

RXR|IM^IM^HL70162^C28161^IM^NCIT|<CR>
```

Example VXU #2 - Indicate vaccine funding source and client eligibility status:

Immunization messages must be able to convey the eligibility status of a recipient when they received immunizations. In addition, these messages must be able to include information on the funding source for an immunization. While these are related, they are separate concepts.

Eligibility status:

The PV1 segment shall be used to convey eligibility status, as it has in the past. The PV1-20, Financial Class, is a repeating field of FC data type. This data type is composed of two components. The first is financial class code (data type IS) and points to a user defined table (0064). The second component is Effective Date and in our case indicates when the financial class was determined. The format is displayed below.

|Financial class^Effective date|

A repetition is indicated by the repetition symbol, ~. The repetition follows the ~. If a list of eligibility is sent, the repetitions should be unique on financial class and effective date. That is, two different financial classes may have the same effective date. Similarly, two different effective dates may have the same financial class.

Only the current eligibility needs to be sent in a message, but the history of eligibility should be stored. Receiving systems should be able to accept either current eligibility or complete history of eligibility.

Eligibility status is a key data element for creating the Vaccines for Children (VFC) report on vaccine usage. Support for this report requires that systems store a history of eligibility statuses and assessment dates. In the past, some systems have only kept the most current status. This prevents accurate reporting.

Sending One Financial Class With Date:

The following example shows the PV1 segment with one financial class and effective date.

```
MSH…

PID…

PV1|1|R||||||||||||||||||V02^20090531<CR>
```

Sending Two Financial Classes With Dates:

The following example shows the PV1 segment with two different financial classes and their effective dates. The first financial class is from the standard VFC classes and the second is a hypothetical financial class. Both were evaluated on the same day.

```
MSH…

PID…

PV1|1|R||||||||||||||||||V02^20090531~IHS02^20090531<CR>
```

If repetition is used and indicates 2 financial classes on the same date, they should not be mutually exclusive. (i.e. Medicaid and not eligible for VFC) Documentation of local usage will greatly facilitate interoperability. This documentation should include both local values in table 0064 and business rules for processing. Local codes should express information about the client at the time of a visit and not about payment source for the immunizations given that day.

Funding Source:

The funding source of a vaccination indicates who paid for a given immunization. Table CDCPHINVS local values Immunization Funding Source (Value set OID

2.16.840.1.114222.4.11.3287) lists the categories. Local systems may support additional values, but must document them.

The following table lists the value set.

Value	Label	Definition
PHC70	Private funds	Immunization was funded by private funds, including insurance.
VXC1	Federal funds	Immunization was funded with public funds from the federal government.
VXC2	State funds	Immunization was funded with public funds from a state.
PHC68	Military funds	Immunization was paid for with military funds.
VXC3	Tribal funds	Immunization was paid for with tribal funds.
OTH	Other	Immunization was paid for by funding not listed above.
UNK	Unspecified	Funding source for immunization is not specified.

The funding source may be linked to each immunization record, using an OBX segment. (See note below for the supporting infrastructure on the system side.)

Note that the order of OBX segments is not specified. They may appear in any order. So one immunization may have an OBX listing funding source, followed by an OBX indicating an adverse reaction. The order may be reversed and receiving system should gracefully handle them in either case.

Observation sub-id (OBX-4) groups related observations.

The following example shows an immunization record with one funding source and a second, historical record of an immunization without a funding source. It does not show eligibility, which would be in the PV1 segment.

```
MSH….
PID…
```

```
ORC|RE|197027^DCS|1970237^DCS|||||||^Clerk^Myron||^Pediatric^MARY^^^
^^^^L^^^^^^^^^^^MD<CR>

RXA|0|1|20090531132511|20090531132511|48^HIB PRP-
T^CVX|999||||^Sticker^Nurse|^^^DCS_DC||||33k2a||PMC^sanofi^MVX<CR>

RXR| C28161^IM^NCIT^IM^IM^HL70396<CR>

OBX|1|CE|30693-3^funding source for
immunization^LN|1|PHC70^Privately
funded^CDCPHINVS||||||F|||20090415<CR>

ORC|RE|197023^DCS|197023^DCS|||||||^Clerk^Myron||^^^^^^^^^L|||||DCS^
Dabig Clinical System^StateIIS<CR>

RXA|0|1|20090415132511|20090415132511|31^Hep B Peds
NOS^CVX|999|||||||||| <CR>
```

In the example above, we see that the first immunization in the message was funded by Private funding. The second immunization in the message does not have funding source included, probably because it is not able to be determined, since it is a historic record of an immunization.

Supporting infrastructure:
In order to support this level of detail, the funding source for each dose of vaccine given must be recorded in the database. There are a number of potential solutions, but one logical one is to build on existing inventory management capabilities. If each immunization is pulled from a specific lot of vaccine and that lot has a funding source associated, then the funding source may be determined. This would require that the inventory management system would need to separate vaccine lots with the same lot number, but different funding.

Example VXU #3 - Include immunization history evaluation and forecast in VXU

The LOINC codes and value sets are still in the process of development. The basic concepts should not change.

Evaluating an immunization history, based on the recommendations of the ACIP schedule or other schedule is an important function provided by many IIS. Based on this evaluation and other factors, recommendations may be made for next doses due. Some of their trading partners would like to receive the outcome of this evaluation. The previous implementation guide included a method for accomplishing this using OBX segments. This document illustrates how this is done and expands on the types of information that may be messaged.

This document does not describe nor specify the functionality or accuracy of the forecasting service. The focus is only on the content of the messages. Implementations should publish documentation on local specifics.

This document is not meant to support a call to a forecasting and evaluation service. It is meant to support existing applications that message vaccine forecasts and evaluation as a part of a complete immunization history.

When a clinician evaluates a person's immunization history and makes recommendations, she/he must use a standard (schedule). Traditionally, clinicians have evaluated based on vaccine groups or families. The schedule has one or more sets of immunization events that can be satisfied to indicate protection against the diseases of the vaccine group of interest. These constitute a series.

The following table lays out the information needed to convey an evaluation and forecast.

Data element	**Use**	**OBX-3 Value**	**Optionality for meaningful evaluation and forecast[49].**
Schedule	Identifies the standards used. ACIP is the prototypical example.	59779-9	Required
Vaccine group/family	Identifies which diseases are expected to be prevented by completion of series.	Single vaccine type use 30956-7 Combination vaccine use 38890-0	Required
Series name	Name of the specific set of doses and recommendations that were used to evaluate this dose and make recommendations.	59780-7	Optional
Ordinal position in	Indicates which dose in a series this	30973-2	Required

[49] This does not mean that every message must have one of the required OBX. It just means that this concept needs to be known to put the evaluation and forecast in context.

Data element	Use	OBX-3 Value	Optionality for meaningful evaluation and forecast[49].
primary series	given immunization fulfills.		
Dose Validity	Indicates if this dose was given appropriately for this series in this schedule.	59781-5	Optional
Number of doses in primary Series	Indicates how many appropriately given doses are required to meet the goals of this series. Note that in the case where there are doses that may be skipped, due to the age of the client/patient, the number shall reflect the adjusted number of doses.	59782-3	Optional
Series Status	This indicates the status of the client's progress toward meeting the goals of the series selected. This could be complete, overdue, in progress, etc.	59783-1	optional
Next dose forecast	Earliest date dose should be given.	30981-5	Required for forecast
	Date next dose recommended	30980-7	
	Latest date next dose should be given	59777-3	

Data element	Use	OBX-3 Value	Optionality for meaningful evaluation and forecast[49].
	Date dose is overdue	59778-1	
Reason code	This can indicate why a dose is not valid or that the recommendation was changed because of a special circumstance.	30982-3	Optional

It is important to note that evaluation relates to doses received, but recommendations relate to doses not yet given. Each will be addressed separately. Evaluation will be associated with an immunization received. Recommendations will be associated with future events. That is they will be associated with an RXA that indicates that no dose was given. They will not be associated with existing immunization records (RXA). This means that if a person has received one hep B dose (valid). The evaluation will be associated with the first RXA indicating that she/he received the dose. The OBX following this will indicate the evaluation. The recommendations for the next dose due will be associated with a second RXA.

There are other factors relating to forecasting, such as exemption and previous immunity. These are dealt with in the client specific conditions impacting forecasting.

When a given dose is evaluated against a schedule, we can make a number of observations about it. Each dose of vaccine recorded is transmitted in an RXA segment. Each RXA segment may have one or more OBX, observation segments. Each distinct piece of information is found in its own OBX segment and follows its associated RXA.

The basic structure for including evaluation in a message is:

RXA-the immunization and vaccine
OBX-vaccine group
OBX-the schedule
OBX-series used
OBX-dose number in series (ordinal position)
OBX-doses in series
OBX-dose validity
OBX-series status

The basic structure for evaluation of combination vaccine components is:

RXA-the immunization and vaccine
OBX-vaccine group [50]
OBX-the schedule
OBX-series used
OBX-dose number in series (ordinal position)
OBX-doses in series
OBX-dose validity
OBX-vaccine group [51]
OBX-the schedule
OBX-series used
OBX-dose number in series (ordinal position)
OBX-doses in series
OBX-dose validity
OBX-series status

The basic structure for the recommendation in the message is:

RXA-vaccine, CVX-NOS (no dose given)
OBX-the schedule
OBX-the series used
OBX-dose number in the series
OBX-number of doses in the series
OBX-earliest next dose due
OBX-recommended next dose due
OBX-overdue next dose due
OBX-series status

This document will first illustrate how to build each OBX to support reporting the key information. The next section will show how to put these pieces together to create evaluation and recommendations in VXU. Note that the same approach may be used in an RSP that returns an immunization history.

Indicating the Schedule that was used:
Evaluation is only meaningful in the context of a defined schedule. Schedule is a required element in a message that is carrying evaluation or recommendation information.

[50] All of the related observations are linked to the vaccine group using the OBX-4, observation sub-id.
[51] All of the related observations are linked to the vaccine group using the OBX-4, observation sub-id.

The only schedule supported by CDC is the ACIP schedule. Some systems may choose to develop other schedules that meet local needs. We assume that ACIP is the schedule used in our examples.

There are no differences between recommendation and evaluation in the OBX indicating the schedule used.

The following example shows that the ACIP schedule was used to evaluate this immunization.

```
ORC|RE||197027^DCS|||||||^Clerk^Myron||^Pediatric^MARY^^^^^^^L^^^^^^
^^^^^MD<CR>

RXA|0|1|20090412|20090412|48^HIB PRP-T^CVX|999|||00^new immunization
record^NIP0001|^Sticker^Nurse|^^^DCS_DC||||33k2a||PMC^sanofi^MVX<CR>

RXR|C28161^IM^NCIT^IM^IM^HL70162|<CR>

OBX|1|CE|31044-
1^reaction^LN|1|VXC16^ACIP^CDCPHINVS||||||F|||20090415<CR>
```

Indicating Vaccine Group associated:
Evaluation is considered by vaccine group. Some immunizations are composed of one vaccine group while others are combinations of several vaccine groups. The first is more straightforward when constructing a message. The vaccine group is indicated in an OBX. All following OBX relate to that vaccine group, using the OBX-4 Observation sub-id.

Single Vaccine group Vaccine:

```
RXA|0|1|20091010||03^MMR^CVX|0.5|ML^^ISO+|||||||EZ342|20111001|MSD^^MVX<CR>

OBX|1|TS|30956-7^vaccine type^LN|1|03^MMR^CVX|||||F<CR>
```

In the case where a combination vaccine is given, each vaccine group is identified and has segments describing its evaluation. This case requires that the information about each vaccine group be handled separately. Each vaccine group is associated with a group of OBX, using the OBX-4 observation sub-id.

Combination vaccine:

```
RXA|0|1|20091010||94^MMRV^CVX|0.5|ML^^ISO+|||||||EZ342|20111001|MSD^^MVX<CR>

OBX|1|TS|38890-0^Component Vaccine Type^LN|1|21^Varicella^CVX|||||F<CR>

… stuff about this vaccine group
```

OBX|4|TS|38890-0^Component Vaccine Type^LN N|2|03^MMR^CVX|||||F<CR>

… stuff about this vaccine group

Reporting The Ordinal Position In A Series:
Evaluation:
Reporting the ordinal position in a selected series may be reported in an OBX segment. The ordinal position is the dose number being satisfied by a given immunization. (dose #1 in a 3 dose series) The next section illustrates how to report the expected number of doses in the series. (3 in the example above) It would be empty for a booster dose and for doses which are not valid.

```
ORC|RE||197027^DCS|||||||^Clerk^Myron||^Pediatric^MARY^^^^^^^L^^^^^^^^^
^^MD<CR>

RXA|0|1|20090412|20090412|48^HIB PRP-T^CVX|999|||00^new immunization
record^NIP0001|^Sticker^Nurse|^^^DCS_DC||||33k2a||PMC^sanofi^MVX<CR>

RXR|C28161^IM^NCIT^IM^IM^HL70162|<CR>

OBX|1|TS|30956-7^vaccine type^LN|1|17^HIB, NOS^CVX||||||F<CR>

OBX|1|CE|59779-9^Immunization Schedule
used^LN|1|VXC16^ACIP^CDCPHINVS||||||F|||20090415<CR>

OBX|1|N|30973-2^dose number in series^LN|1|1||||||F|||20090415<CR>
```

Recommendation:
There is a different code to be used for indicating the number of the next dose due.

Note that the preferred LOINC codes are not vaccine group specific. The use of old vaccine specific LOINC should not occur. For example, **30936-9 DTaP/DTP dose count in combination vaccine** should not be used.

Reporting the Number of Doses in a Series:
There are no differences between recommendations and evaluations. This numeric field indicates the number of doses required to meet the goals of the primary series for this vaccine group. It would be empty for a booster dose.

```
OBX|1|N|59782-3^number of doses in series^LN|1|1||||||F|||20090415<CR>
```

Reporting Next Dose Recommendation Dates:
Forecasting next dose due is an important function that can be reported in a message. There are a number of key dates that can be communicated:

Date type	Definition
The earliest acceptable date based on the schedule used	This is the earliest date that a person should receive the next dose for the vaccine group. It does not include any grace period. For example the earliest data a person should receive a DTAP is age 42 days.
The recommended date	This is the date that a person should ideally receive the next dose for the vaccine group.
The overdue date (the date the person is considered late for getting the vaccine)	This is the date that the person is considered late for getting the next dose for the vaccine group. It is a locally defined value.
The latest date that a dose should be given (e.g. for HIB it is currently 5 years old)	This is the last possible date that a person should receive the next dose for the vaccine group. Generally, this is related to age of recipient. For example the oldest a person should receive a dose of HIB is 5 years old.

Not all dates may be relevant and so may be omitted.

```
OBX|1|TS|30956-7^vaccine type^LN|1|17^HIB, NOS^CVX||||||F<CR>

OBX|1|CE|59779-9^Immunization Schedule
used^LN|1|VXC16^ACIP^CDCPHINVS||||||F|||20090415<CR>

OBX|1|DT|30980-7^Date vaccination
due^LN|1|20090615||||||F|||20090415<CR>

OBX|1|DT|59777-3^Latest date to give
vaccine^LN|1|20100615||||||F|||20090415<CR>
```

Reporting Recommendation Reasons:

Sometimes a dose may break a specific rule in the schedule. Alternatively conditions may trigger special rules, such as the need for accelerating the recommendations to catch up with the preferred schedule. This may be reported from the system in a message. The list of values is locally determined. These should be documented locally.

Local Codes drive the answers.

Using The NTE Segment Associated With An OBX To Provide More Information:
Each OBX may have an associated NTE segment. This may be used for sending notes or comments that the receiving system may choose to display to a user. Any use of this is local and requires local documentation.

Issues That Are Outside Of Messaging But Impact The Value Sent In A Message

1. There are some series where doses may be skipped. For instance a person who gets significantly behind on some HIB series may skip a dose and complete "early". Local profiles should specify how these doses will be handled and messaged.
2. Some vaccines have a numbered primary series and are followed by intermittent booster doses. These do not increase the number of doses in the primary series.
3. Persons who have been previously infected may not need further doses of vaccine. This can be messaged in an OBX reporting client immunity.

Example VXU #4 - Send client specific conditions

Evaluation of immunization history and forecasting next dose due are important services provided by many IIS. There are a number of factors that can impact these evaluations and forecasts. In general terms, some factors contraindicate next doses, while others recommend next doses. These factors may be messaged in OBX segments associated with an RXA.

Evidence of immunity:
Infection with the diseases that are the target of immunizations leads to long-term immunity. Further immunization against the disease is not likely to provide benefit.

Definition:
Evidence of immunity indicates that a person has plausible evidence that they have already developed immunity to a particular disease. The definition of plausible evidence is a local decision, but best practice would suggest that serological evidence of immunity is the strongest indicator of immunity.

The example below shows that no dose of Hep B vaccine was given because the person had evidence of previous infection with Hep B.

```
ORC|RE||197027^DCS|||||||^Clerk^Myron| <CR>

RXA|0|1|20090412|20090412|998^No vaccine administered^CVX|999<CR>

OBX|1|CE|59784-9^Disease with presumed immunity ^LN|1|66071002^HISTORY
OF HEP B INFECTION^SCT||||||F<CR>
```

Contraindications to immunization:
There are a number of contraindications to immunization. These may be temporary or permanent. One is a history of reactions to previous immunization. That is dealt with above. Others include allergies to components of vaccines, physical conditions, current medication and current illnesses.

Definition:
A contraindication is any physical condition, current medication or other factor that indicates that a person should not receive an immunization that may be associated with the contraindication. This contraindication may be temporary or permanent.
LOINC: 30945-0

Examples:

```
OBX|1|CE|30945-0^Vaccination contraindication^LN|1|91930004^allergy
to eggs^SCT||||||F|||20090415<CR>
```

```
OBX|1|CE|30945-0^Vaccination contraindication^LN|1|VXC19^allergy to
thimerasol(anaphylactic)^CDCPHINVS||||||F|||20090415<CR>
```

Factors which indicate the need for an immunization or a changed recommendation:
Several factors can drive the need for a specific immunization or a change in the normal schedule for immunization. These may be an exposure to an infection, such as rabies. Other risk factors may include membership in a risk group.

Definition:
A risk factor is some characteristic of an individual, which may lead to a recommendation for a specific vaccine.

```
OBX|1|CE|59785-6^Special Indication for
vaccination^LN|1|VXC7^exposure to
rabies^CDCPHINVS||||||F|||20090415<CR>
```

Example VXU #5 – Send immunizations associated with reactions (adverse events)

Some people experience adverse events after receipt of an immunization. In many cases, Immunization Information Systems (IIS) record these in conjunction with a specific immunization event. Occasionally, the exact immunization event information is unknown. (e.g. anaphylaxis occurred after a previous dose, years in the past.)

Definition:

An adverse reaction is a negative physical condition that occurs shortly after one or more immunizations have been received.

LOINC code: 31044-1

Value Set is Vaccination Reaction in CDCPHINVS

```
ORC|RE||197027^DCS||||||||^Clerk^Myron||^Pediatric^MARY^^^^^^^L^^^^^^
^^^^^MD<CR>

RXA|0|1|20090412|20090412|48^HIB PRP-T^CVX|999|||00^new immunization
record^NIP0001|^Sticker^Nurse|^^^DCS_DC||||33k2a||PMC^sanofi^MVX<CR>

RXR|C28161^IM^NCIT^IM^IM^HL70162|<CR>

OBX|1|CE|31044-1^reaction^LN|1|VXC12^fever > 40.5
C^CDCPHINVS||||||F|||20090415<CR>

OBX|1|CE|31044-1^reaction^LN|1|81308009^encephalopathy, disorder of
brain^SCT||||||F|||20090415<CR>
```

This example describes a dose of HIB given on 4/12/2009. On 4/15/2009, the client experienced a fever > 40.5C and encephalopathy.

Example VXU #6 –Delete an Immunization Record

There are occasions when a system that has sent an immunization record to another system wishes to delete the record on the other system. There are several approaches that may be taken. The approach selected depends on the rules and capabilities of both systems.

One approach uses a snap shot approach. Each time an immunization history is sent, it replaces the entire immunization history on the receiving side.

Another approach is to use the RXA-21, Action Code to request deletion of a specific record. Some systems will match the request with an existing immunization record based on vaccine, vaccination date and other factors implicit in the record and the request. They may also use the ORC-3, Filler Order Number, to uniquely delete the record of interest.

The following diagram illustrates how the ORC-3 may be used to identify an immunization record for deletion[52]. Note that the sending system includes the sending system unique id in the ORC-3 first component. The second component is the assigning authority, in this case a system that is labeled MYIIS. In order for a later delete request to be successful, the receiving system must store those values. A subsequent request to

[52] The other approaches will not be further illustrated here.

delete an immunization record includes the sending system id and assigning authority. The receiving system searches for an immunization record with the same sending system id and assigning authority. In this case we show that the record match is made and the record is deleted from the receiving system.

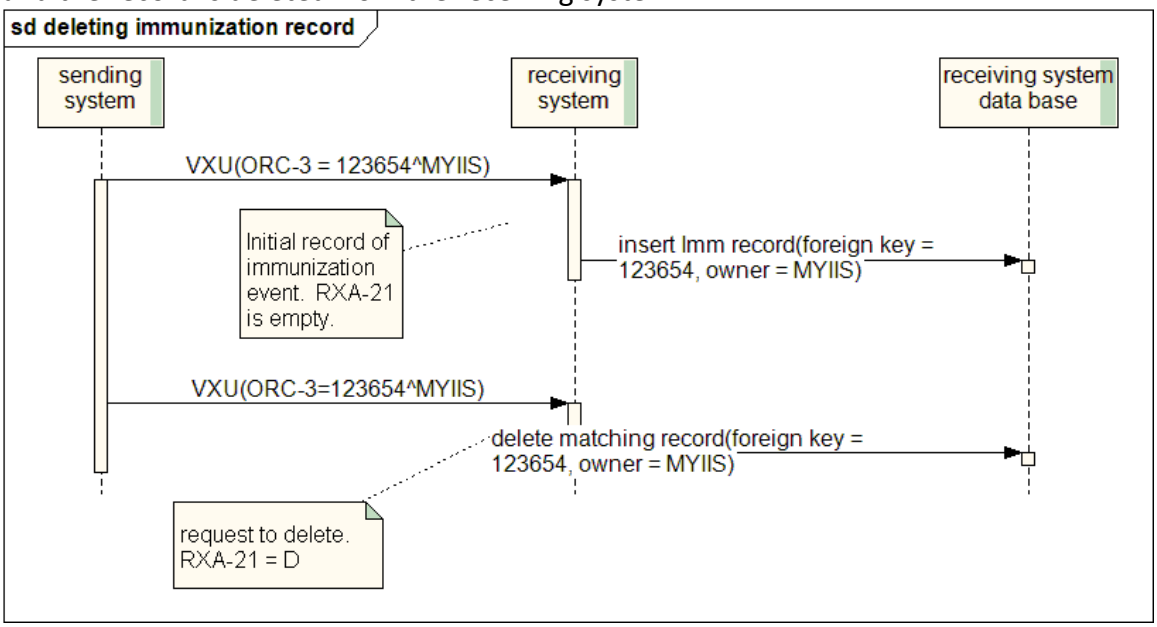

VXU Example #7--Send Information About Vaccine Information Statement (VIS)

The Vaccine Information Statement (VIS) is a document that explains the reasons for a vaccine and the potential risks from receiving the vaccine. IIS track the fact that a VIS was shared with the client or parent. There are two pieces of information about each event.

- the date that the VIS was presented to the client/parent.
- the publication date of the VIS that was presented.

These are carried in separate OBX segments associated with a vaccination event (RXA). For a vaccine that is a combination of vaccines, there are often separate VIS for each vaccine. This may be handled by sending 2 sets of OBX, one for each vaccine.

There is a change in how OBX-3 uses LOINC codes. It no longer uses subcomponent LOINCs to group information. In the old Guide, 38890-0&29768-9 in OBX-3 indicated the vaccine group and VIS Publication Date. The first component is unacceptable in version 2.5.1.

Example 1-Single vaccine

RXA|0|1|20091010||03^MMR^CVX|0.5|ML^^ISO+||||||||EZ342|20111001|MSD^^MVX<CR>

OBX|1|TS|30956-7^vaccine type^LN|1|03^MMR^CVX||||||F<CR>

OBX|2|TS|29768-9^VIS Publication Date^LN|1|20080110||||||F<CR>

OBX|3|TS|29769-7^VIS Presentation Date^LN|1|20091010||||||F<CR>

In this example the person received a dose of MMR on 10/10/2009. They received a VIS sheet on the same day. The document had a publication date of 1/10/2008.

Example 2-Combination vaccine

RXA|0|1|20091010||94^MMRV^CVX|0.5|ML^^ISO+||||||||EZ342|20111001|MSD^^MVX<CR>

OBX|1|TS|38890-0^Component Vaccine Type^LN|1|21^Varicella^CVX||||||F<CR>

OBX|2|TS|29768-9^VIS Publication Date^LN|1|20091010||||||F<CR>

OBX|3|TS|29769-9^VIS Presentation Date^LN|1|20101010||||||F<CR>

OBX|4|TS|38890-0^Component Vaccine Type^LN N|2|03^MMR^CVX||||||F<CR>

OBX|5|TS|29768-9^VIS Publication Date^LN|2|20071010||||||F<CR

OBX|6|TS|29768-9^VIS Presentation Date^LN|2|20101010||||||F<CR>

This example shows that a person received an MMRV on 10/10/2007. They received 2 VIS documents, one for MMR and one for Varicella. The publication date for the MMR was 10/10/2007 and the Varicella on 10/10/2009. Note the use of OBX-4 to group related data together.

VXU Example #8—Send Information About Immunization Refusal

Clients or their parents may choose not to be immunized against a particular disease or diseases. It is important to share this information when sending immunization histories using HL7. There are several components to messaging a refusal. The refusal reason is indicated in RXA-18. The Completion Status in RXA-20 indicates that the vaccine was not given. The amount given should be 0. The following example illustrates how to accomplish this.

ORC|RE||197027^DCS|||||||^Clerk^Myron <CR>

RXA|0|1|20091010||107^DTAP-NOS^CVX|999||||||||||00^Parental refusal^NIP002||RE<CR>

This example shows that on 10/10/2009 this client's parent refused to have the child receive a DTAP immunization. Note that the ORC is still required. Filler Order Number is still required, but meaningless.

Note that RXA-2 is NOT used to indicate dose number, as it had in the past Guide. It is constrained to have a value of 1.

VXU Example #9—Send Two Lot Numbers in RXA

There are occasions when two vaccines are combined at the time of administration.

The RXA segment should be used to capture this information, specifically the RXA-15 field. This field allows repetition. Each separate Lot number can be placed here with a ~ separating the two lot numbers. Each component belongs to one or more vaccine groups or families.

This document does not specify the order of the lot numbers.

For example, if we needed to include an immunization record where the vaccine was Pentacel, we would put the lot number from the first component in sequence 15, followed by a ~ and then the second lot number. The specific RXA field is highlighted below in yellow.

Example:

```
RXA|0|1|20080907|20080907|120^DTAP-IPV-HIB^CVX^^^ |.5|ML^^ISO+||00^NEW
IMMUNIZATION RECORD^NIP001|1234567890^SMITH^SALLY^S||
|||1234ad~455sd||PMC^Sanofi^MVX|||CP |<CR>
```

VXU Example #10—Recording Birth Information

Birth information can be a powerful tool in identity resolution. Components of birth information are listed in the NVAC core data elements. The information that can be carried in an HL7 message includes:

Field	HL7 message Component	Example
Birth date	PID-7	19500512
Birth Registration Number	PID-3 (as one identifier in list)	12345^^^assigning authority^BR
Birth order	PID-24	2
Multiple Birth Indicator	PID-25	Y
Birth State	PID-11 (as one address in list, use address type BDL)	^^^WI^^^BDL
Birth facility	PID-23	Children's Hospital

Note that Birth Facility is not used for Birth State.

VXU Example #11—Recording an incompletely administered dose or a non-potent dose.

There are occasions when a dose is not completely administered. For example a child may jump away during injection and an unknown quantity was administered. In this case, the dose needs to be recorded to support accurate inventory management and to allow for recall of the client if there is a recall of the vaccine. This is accomplished using

the Completion status in RXA-20. The RXA is completed as usual, but the completion status is set to PA. If more details are of interest, then this information may be placed in an NTE segment under an OBX segment. If the reason is a non-potent dose, then this information may be included in an OBX.

RXA|0|1|20091010||03^MMR^CVX|0.5|ML^^ISO+||||||||A23E1||MSD^^MVX|||PA<CR>

Send Acknowledgement ACK In Response To VXU

Sending an acknowledgement can accomplish one of a number of tasks. It can indicate that the message that was sent was successfully received and processed. It can also indicate that the message had errors. When a message is sent, it can indicate when an acknowledgement is expected. The choices may include always, only on error or never.

The ability to accept ACK messages allows sending system managers to trouble-shoot communications. It allows them to identify systematic problems with message creation. Being able to send ACK allows receiving system managers to inform sending system managers about the nature of errors received.

Send acknowledgement of success in ACK

Some systems may wish to receive an acknowledgment message, regardless of whether the receiving system had problems with the message. In that case, there is a relatively straightforward response.

MSH|^~|&|DCS|MYIIS|MYIIS||20090604||ACK^V04^ACK|9299381|P|2.5.1|||ER<CR>

MSA|AA|9299381<CR>

In the example above, the system with the code DCS is sending an acknowledgement to the system with the code MYIIS on June 4, 2009. The message indicates that there were no errors in processing. DCS only wants an acknowledgement if MYIIS encounters an error in processing the acknowledgement.

Send Error in ACK

When there are errors, these can either be fatal or non-fatal. Fatal errors indicate that the message that was sent was not able to be processed. Non-fatal means that the message that was sent had some type of error, which did not prevent the message from being processed. Some data may have been lost as a result of the error. In addition, the error may have been in the processing of the HL7 or violation of a local business rule.

Acknowledging A Fatal HL7 Processing Error:

There are a number of problems that may cause a fatal error when processing an HL7 message that are based on HL7 rules. These include missing required segments. If a required field is missing, then the segment is treated as missing. If this is a required segment, then the error becomes fatal.

MSH|^~|&|DCS|MYIIS|MYIIS||20090604||ACK^V04^ACK|9299381|P|2.5.1|||ER<CR>

MSA|AR|9299381<CR>

ERR||PID^5|101^required field missing^HL70357|E<CR>

ERR||PID|100^required segment missing^HL70357|E<CR>

In the example message above, we see that the PID-5 (patient name) field was missing. Since this is a required field in a PID, the PID is ignored and therefore is missing.

Note that local violation of local business rules may by returned in an acknowledgement message. Those rules are best represented in codes that are referenced in a local table. These may be recorded in the ERR segment. A local business rule may lead to rejection of parts or all of a message. For instance, a local business rule may state that the system requires a first name for every person. If no first name is included in the message, then the system rejects the field for name (PID-5). Since this is a required field in a required message, the entire message is rejected. There would be a third ERR segment indicating that a locally required component was missing. (No example is given, as there is no local table of errors in this appendix.

Acknowledging A Non-Fatal HL7 Processing Error:

A non-fatal error may occur for a number of reasons. One example would occur when a non-required component or field is malformed. For instance, Last Update Date is not a required field. If the message indicated that the last update occurred on February 31, 2009, then that field would be ignored. Since the field is not required, the segment would not be rejected.

Local business rules should specify what will occur for each type of error. In the case above, the field could be ignore, it could be accepted and flagged for further follow-up , the entire message could be rejected or the bad data could be stored in the data base as.

MSH|^~|&|DCS|MYIIS|MYIIS||20090604||ACK^V04^ACK|9299381|P|2.5.1|||ER
MSA|AE|9299381
ERR||PID^33|207^application internal error^HL70357|I

The example above indicates that an error occurred in PID-33 (last updated date). It did not cause the message to be rejected.

Send Request for Vaccine History (QBP/RSP)

Process for requesting Immunization History

Requesting an immunization history is a key function supported by messaging. As described above, a complete immunization history includes all the information needed for evaluating what immunizations have been received and what ones are needed next. This query is defined in a Query Profile in Chapter 7 of the Implementation Guide. The requesting system sends a request with some combination of demographic and identifier information. This Implementation Guide replicates the functionality of the VXQ/VXX/VXR query and responses.

Description of the VXQ/VXX/VXR Process From Version 2.3.1

The following describes the process that was used when responding to a VXQ and is included to give background. As described in the use cases in Chapter 2 of this Guide, requesting an immunization history requires the responding system to find a matching client. The old VXQ query required implicit identity resolution. That is, the responding system used locally defined methods to find a person and if exactly one high-confidence match was found, returned an immunization history. If lower confidence matches were found, it returned a list of clients with their identifiers (PID,NK1) for review by a person on the requesting system. If one of the candidates was selected and returned in a second VXQ, then the one high-confidence match is returned. The following diagram illustrates the flow. (The messages between systems are bolded arrows.)

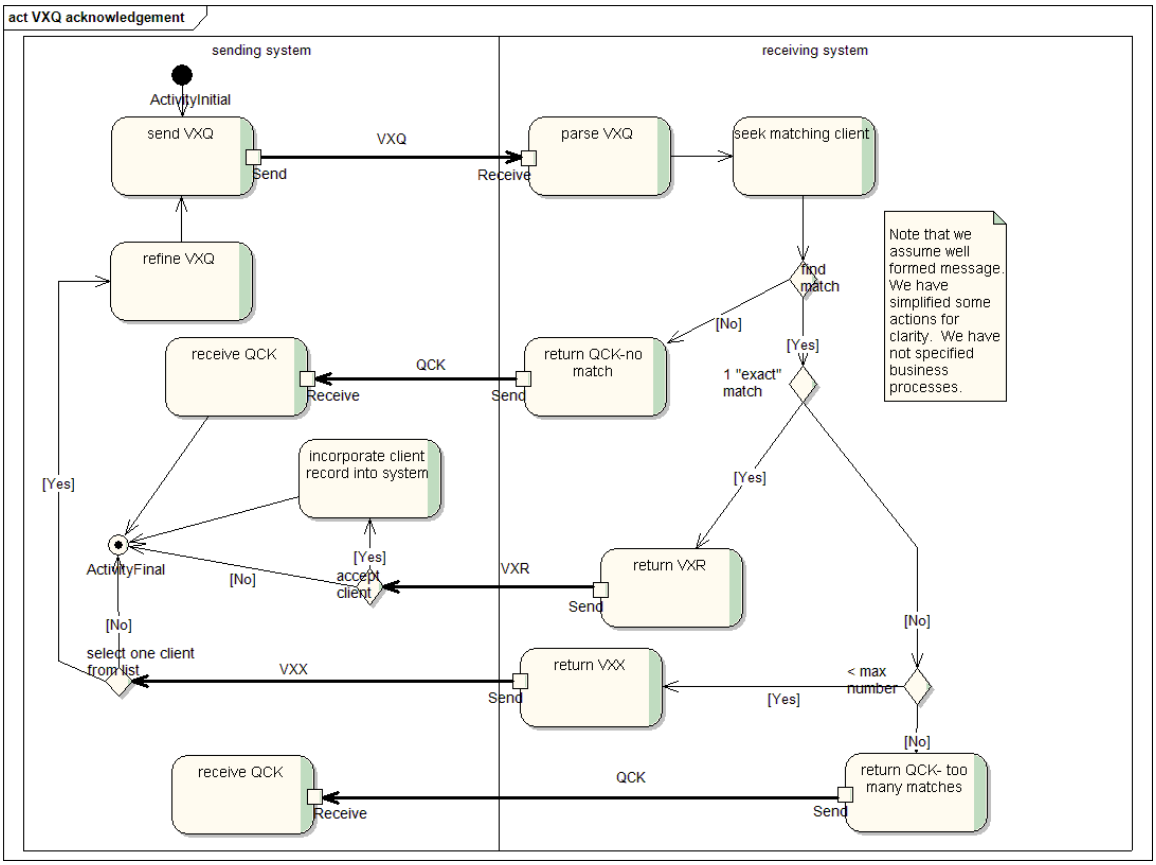

Figure 8--VXQ/VXX/VXR processes

The receiving system applies locally defined search logic. There are 4 possible outcomes if the message is successfully processed:

1. The search finds exactly one high confidence candidate client to return.
    a. Immunization history is returned.
    b. If sending system user may choose to accept the immunization history, the sending system follows local protocols for incorporating the new record.
2. The search finds one or more candidate clients.
    a. Sending system user selects the one of interest and resends the VXQ with the more complete information.
3. The search finds no candidates to return.
    a. An acknowledgement is returned to the sending system.
4. The message is malformed and no query is processed.
    a. An acknowledgement is returned to the sending system.

Step 2 is the step where the implicit identity resolution occurs.

The newer QBP-style query allows identity resolution to be separated from request for content. This is accomplished using a two-step approach. It mirrors the flow of the VXQ when lower confidence candidates are found and returned. One industry standard for accomplishing this two-step approach is the Patient Demographic Query (profile by IHE).

This Guide allows either exact replication of the VXQ/VXX/VXR approach or a two-step approach. The two-step process accomplishes the same goal as the old process, but separates the request for immunization history and the request for identity resolution. The two-step approach takes the results of the selection from the identity resolution and requests the immunization history for the selected person. Note that this two-step approach also facilitates interaction with a Master Patient index (MPI).

This Guide and Appendix does NOT prescribe the search methods, so these should be described in a local profile or implementation guide.

In addition, this guide does not define the meaning of exact matches. This needs to be specified locally.

Using QBP query to replicate VXQ/VXX/VXR

The diagram for the new query is very similar to the previous diagram. The only real differences are the messages used. In place of the VXQ, a Request Immunization History query (QBP^Q11^QBP_Q11) is sent. It has an MSH-21, profile id of Z34^CDCPHINVS. In place of a VXX, a Return Candidate List response is returned (profile id of Z31^CDCPHINVS). In place of a VXR, a Return Immunization History response is returned (profile id of Z32^CDCPHINVS).

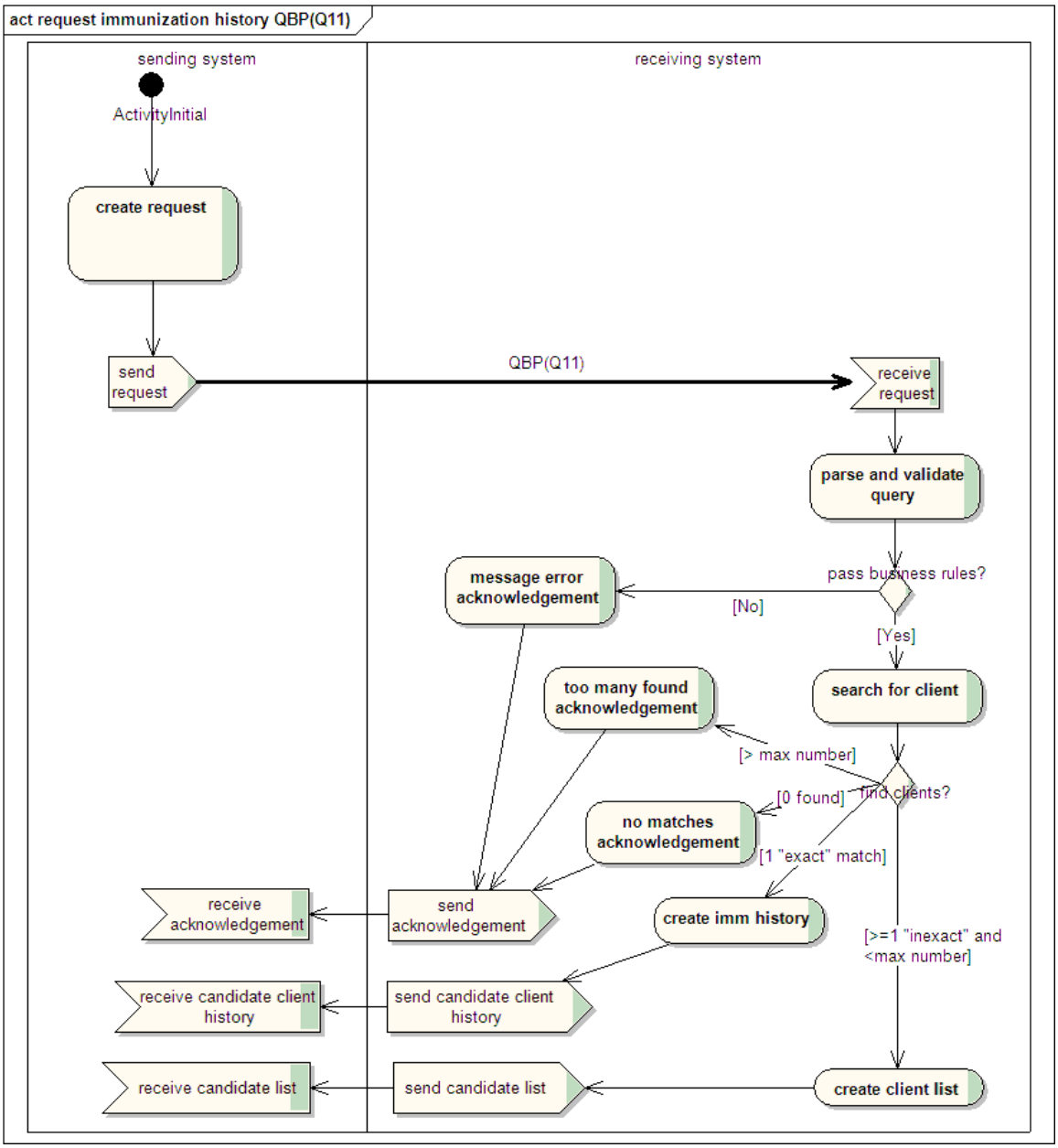

Figure 9--Request Immunization History

1. The process for sending a query requesting an Immunization history begins with the sending system building the message.
2. The sending system connects to the receiving system and sends the query message.
3. The receiving system accepts the message.
4. The receiving system parses the message and validates.
    a. Determine if message meets HL7 rules
    b. Validate based on local business rules[53]

[53] The process for responding is documented below.

5. Seek matching client in receiver data base[54]
    a. No match is found
    b. Exactly one match is found.
    c. One or more inexact matches and less than maximum plus 1 allowed[55] matches found.
    d. More than the maximum allowed matches found.
    e. One or more clients are found, but they do not want their records shared.
6. The receiving system responds (see below).

When a client is does not want his/her data shared and is found, local business rules need to be applied. For instance, some applications may behave as if the client record does not exist in the system. That is, it would respond with a "no records found" message. The exception to this would be if the requesting provider were the one who set the protection indicator. In this case, the person may be a candidate that is returned. Another response might be to send limited information notifying the requesting system that the person exists, but wants his/her records protected.

The sending system must deal with the returned messages. While it is outside the scope of this implementation guide, there are some logical actions. These actions should be documented locally. The following indicate some of the possibilities. The list is neither prescriptive nor complete.

- One candidate immunization history is returned.
    - User reviews and accepts
    - User reviews and rejects
    - Requesting system accepts and marks for review.
- A list of candidates are returned
    - User reviews and selects one
        - New QBP is sent using the identifying information from the RSP list
    - User reviews and rejects all
        - User creates a new query with more or different information
    - Requesting system accepts and stores the list for later review.

The following is an example query using the QBP^Q11 query profile specified in the Implementation Guide.

```
MSH|^~\&|||||||QBP^Q11^QBP_Q11|793543|P|2.5.1||||||||Z34^CDCPHINVS <CR>

QPD|Z34^Request Immunization
History^HL70471|37374859|123456^^^MYEHR^MR|Child^Bobbie^Q^^^^L|Que^Suzy^^^^^M|20050512|M|10 East Main
```

[54] Each case will be detailed below. Note that this is an area that should clearly be documented by each system in a local profile or implementation guide.
[55] This maximum may be set by the sending system and may be determined by the receiving system. The maximum will be the smaller of the two.

St^^Myfaircity^GA^^^L<CR>

RCP|I|5^RD^HL70126|R^real-time^HL70394<CR>

This query is being sent from a system with a name space identifier of MYEHR. It is requesting an immunization history for a person named Bobbie Q Child. His mother's maiden name was Suzy Que. He was born 5/12/2005 and lives at 10 East Main St, Myfaircity, Georgia. His medical record number with MYEHR is 12345. The most records that the requesting system wants returned if lower confidence candidates are returned is 5. Processing is expected to be "immediate".

Local implementations will specify which fields are required in the QPD. All fields have a usage of RE (required, but may be empty). This means that sending systems may populate any or all of these fields. Receiving systems must accept values in any of these fields, but may specify which are required and which will be ignored.

Returning a list of candidate clients in response to QBP^Q11 query

When a system receives a QBP^Q11 Request for Immunization History query, it may find one or more, lower confidence candidates. In this case it returns an RSP that contains a list of these candidates. It includes all pertinent information in PID, NK1 and PD1 segments. If the number of candidates is greater than the maximum number requested by the querying system or greater than the maximum number the responding system allows to be returned, then an error acknowledgment will be sent. (See below)

Note that PID-1, Set Id, is required when returning a list of PID.

The following example RSP message illustrates the case when 2 candidates have been found by the responding system. All known information for each candidate that can be included in PID, NK1 and PD1 segments is returned. We assume that the medical record number sent in the query is not known to the responding system. If it were, it is unlikely that the responding system would find lower confidence candidates.

The actual logic used to find the candidates is not specified by this document. It may be as simple as exact string and date matching or as complex as a probabilistic search algorithm.

MSH|^~\&|SOME_SYSTEM|A_Clinic|MYIIS|MyStateIIS|20091105||RSP^K11^RSP_K11|37374859|P|2.5.1||||||||Z31^CDCPHINVS<CR>

MSA|AA|793543<CR>

QAK|37374859|AA<CR>

QPD|Z34^Request Immunization History^HL70471|37374859|123456^^^MYEHR^MR|Child^Bobbie^Q^^^^L|Que^Suzy^^^^^M|20050512|M|10 East Main St^^Myfaircity^GA^^^L<CR

PID|1||99445566^^^MYStateIIS^SR||Child^Robert^^^^^L||20050512|M<CR>

NK1||Child^Susan|MTH^Mother^HL70063|^^Myfaircity^GA<CR>

PID|2||123456^^^MYStateIIS^SR||Child^Robert^^^^^L||20050512|M<CR>

This response includes 2 candidates that must be reviewed by the person requesting records. If they select a specific client and repeat the Request Immunization History query with the refined information, they should receive a response that includes the complete immunization history from the IIS. Note the use of PID-1, set id.

Returning an immunization history in response to a Request for Immunization History query

When the Request Immunization History query finds one high-confidence match, the matching client's immunization history is returned in the response. The following example message shows a simple response. Note that this query could have been a secondary query that occurred after preliminary identity resolution or a primary query with sufficient demographic data to permit matching.

MSH||MYIIS|MyStateIIS||MYEHR|20091130||RSP^K11^RSP_K11|7731029|P|2.5.1||||||||Z32^CDCPHINVS<CR>

MSA|AA|793543<CR>

QAK|37374859|OK|Z343^request Immunization history^HL70471<CR>

QPD|Z34^Request Immunization History^HL70471|37374859|123456^^^MYEHR^MR|Child^Bobbie^Q^^^^L|Que^Suzy^^^^^M|20050512|M|10 East Main St^^Myfaircity^GA^^^L<CR

PID|1||123456^^^MYEHR^MR||Child^Robert^Quenton^^^^L|Que^Suzy^^^^^M||||10 East Main St^^Myfaircity^GA<CR>

PD1||||||||||||N|20091130<CR>

NK1|1|Child^Suzy^^^^^L|MTH^Mother^HL70063<CR>

PV1||R||||||||||||||||||V03^20091130<CR>

ORC|RE||142324567^YOUR_EHR||||||^Shotgiver^Fred||^Orderwriter^Sally^^^^^^^^^^^^^^^^^MD<CR>

RXA|0|1|20050725||03^MMR^HL70292|0.5|ML^^ISO+||^New Immunization Record^NIP001<CR>

RXR|SC^^HL70162<CR>

Note that the response returned the medical record number from the MYEHR system. It could also have returned the IIS id. This is a policy decision set locally.

Acknowledging a Query that finds no candidate clients

A well-formed query may find no matching candidates. This is not an error, but should be acknowledged in a response message. The following example message shows how this may be done. Note that the Request Immunization History response grammar indicates that MSH, MSA, QAK and QPD are required segments.

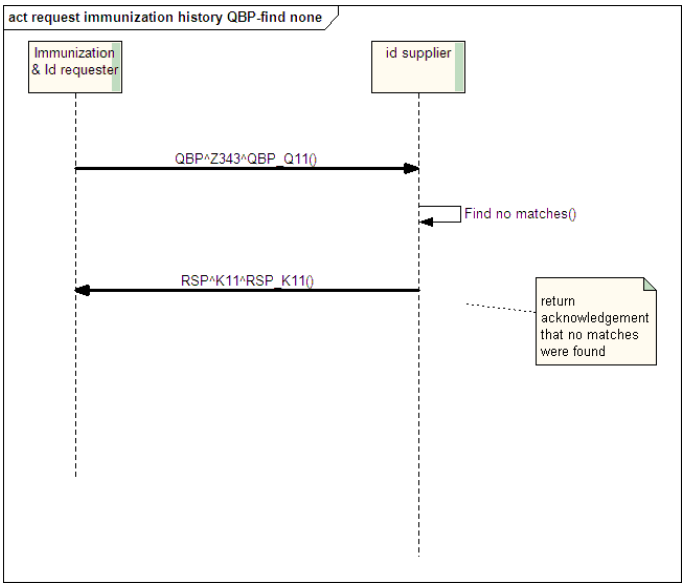

QAK-2 indicates that no data were found that matched the query parameters.

MSH||MYIIS|MyStateIIS||MYEHR|20091130||RSP^K11^RSP_K11|7731029|P|2.5.1||||||||| <CR>

MSA|AE|793543<CR>

QAK|37374859|NF|Z343^request Immunization history^HL70471<CR>

QPD|Z34^Request Immunization History^HL70471|37374859|123456^^^MYEHR^MR|Child^Bobbie^Q^^^^L|Que^Suzy^^^^^M|20050512|M|10 East Main St^^Myfaircity^GA^^^L<CR

Using a Two-step process to request an immunization history

The IHE profile defines 2 queries for obtaining an ID of interest. One query requests an id based on the demographic information included in the query (PDQ, using the Pediatric Demographic profile). When a match is found, it returns the relevant id and demographic information. The other query seeks an id for a person from one registered provider based on the id from another registered provider (PIX).

The use of the IHE Patient Identification Cross-Referencing (PIX) and Patient Demographic Query (PDQ) transactions is an alternative approach which separates retrieval/update of a patient identifier and retrieval/update of immunization data into two messaging transactions.

A Patient Demographic Supplier may be a Master Person Index or other source of patient demographic and identification information. While we will focus on an MPI below, any Patient Demographic Supplier may be substituted.

A Master Person Index is a database that contains demographic and locating information of registered persons and associates each person with the identifiers for the person from each of the participating systems. This allows one system to request the

identifier for a person that was assigned by another system. This id may be used to request data from that second system and assures a positive match.

Systems that participate in an MPI should register each person they are interested in with the MPI. An excellent profile for maintaining and interacting with an MPI has been published by the group, Integrating the Healthcare Enterprise (IHE). That profile will not be replicated here. However, the process for requesting personal identifier outlined below is based on that profile.

Adding a patient record to an MPI is done by a PIX transaction using an ADT message. This method may be used by an EHR or by an IIS, or both, to add a patient identifier to an MPI. The PIX profile, described in the IHE Technical Framework Volume I, includes specific transactions that describe the segments and fields to be used. These ADT-based transactions are described in the IHE Technical Framework Volume II. The standard transaction used by PIX is ITI-8, which uses an HL7 V2.3.1 ADT. The Pediatric Demographics Option, described at this writing in a supplement to PIX and PDQ, is preferred for interactions with MPIs managing IIS data. The use of the Pediatric Demographics Option adds ITI-30, which uses an HL7 V2.5 ADT.

Once a person has been registered with the MPI, a PIX Query may be used to retrieve the cross-referenced IIS identifier (if any).

The following diagram illustrates the use of the PIX query to get a pre-registered patient identifier. This requires that the cross-referenced identifiers are registered using the ADT message.

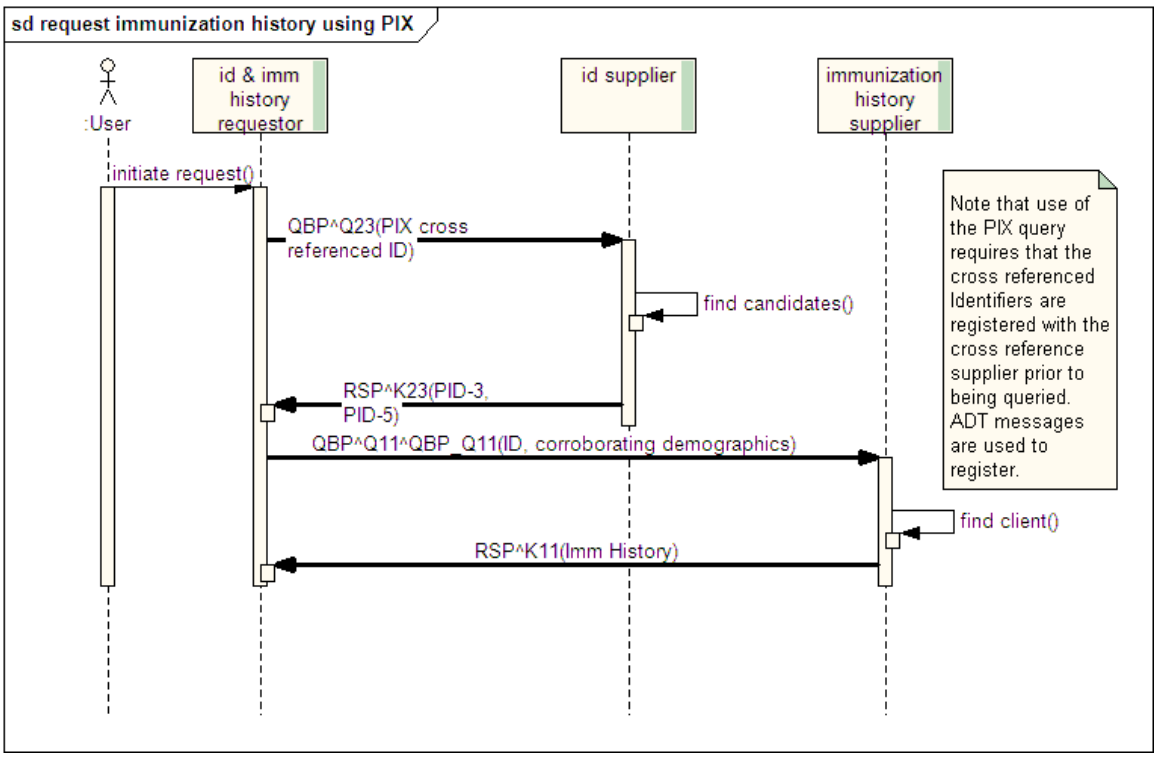

Note that this interaction is simplified. The initiating system sends a request for a patient identifier. The request includes one identifier in a PID-3. The identity supplier looks for a matching identifier of interest and returns it along with the patient name (PID-5). This information is included in the request immunization history query (QBP^Q11). Assuming that the identifier used is the one in the immunization history supplier, there should be a one to one match.

If the EHR wishes to retrieve the IIS id without previously registering the patient with the MPI, or if it wishes to query the MPI by demographics for some other reason, it may use a Patient Demographics Query to do so.

The following diagram illustrates the use of PDQ to obtain an id and how this would be used to request an immunization record. The record seeker uses a Patient Demographic Query (PDQ) to a Master Person Index (MPI), requesting the identifiers for the person of interest. The MPI finds the person of interest and returns the demographic information and identifiers. The record seeker system uses this information to create a request for immunization history, which it sends to the record source. The record source uses this information to find the immunization history for the person of interest.

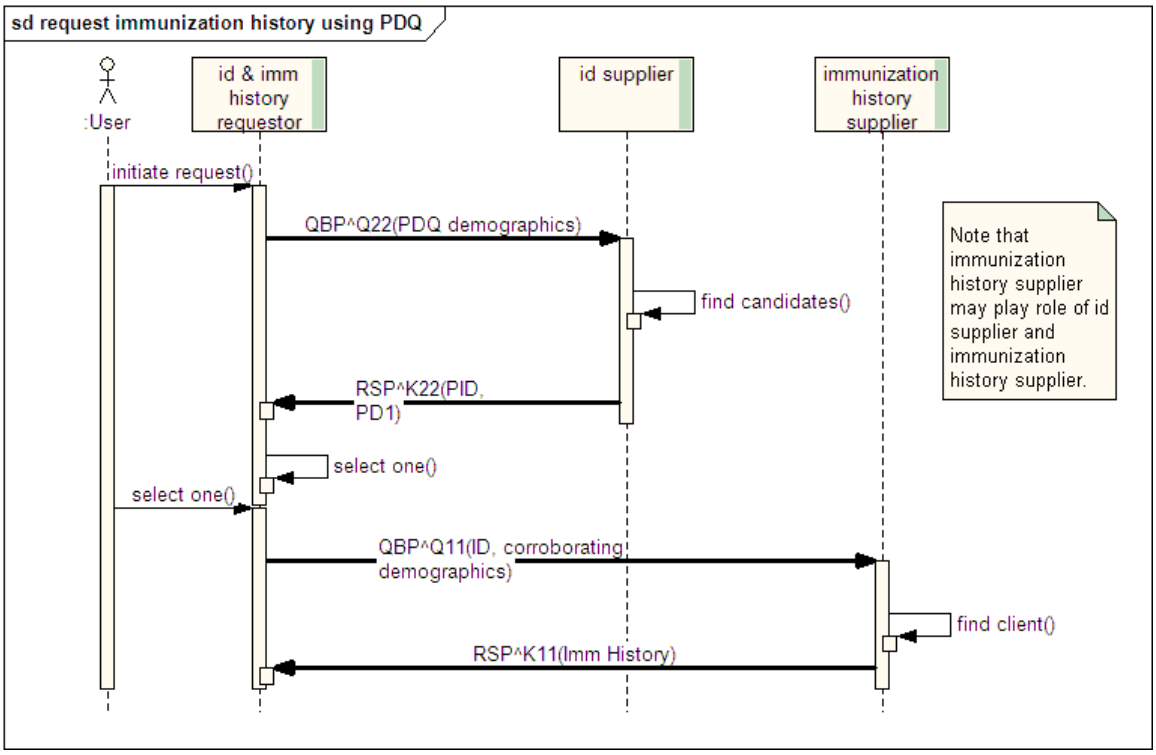

Note that this interaction is simplified. The client of interest would be selected and that client's information would populate the query requesting an immunization history. To be assured of success, the record source system would need to have registered the person in the MPI. In that way the person id in the record source would be available in the MPI.

The diagrams illustrating the PIX Query and Patient Demographics Query (PDQ) approaches share similar flow to the original VXQ message. PIX Query followed by a Request Immunization History using the retrieved identifier is similar to a VXQ/VXR. PDQ followed by an Request Immunization History replicates a VXQ/VXX and VXQ/VXR.[56]

The following illustrates one of the above-described messages, the Patient Demographics Query. For examples of other messages, IHE documentation should be consulted.

MSH|^~\&| MYIIS|MyStateIIS|SOME_SYSTEM|A_Clinic |20091105||QBP^Q22^ ||P|2.5.1||||||||| <CR>

QPD|^IHE PDQ Query^
|37374859|@PID.3.1^123456~@PID.3.4^MYEHR~@PID.3.5^MR~@PID.5.1.1^Child~@PID.5.2^Bobbie~@PID.5.3^Q

[56] It is possible that even with the two-step process, an exact match may not be found for the record of interest. This is especially true if the source of identity resolution is not exactly in synch with the source of the immunization history. Local rules should dictate the response to this situation.

~@PID.6.1.1^Que~@PID.6.2^Suzy ~@PID.7^20050512~@PID.8^M~@PID.11.1.1^10 East Main St^~@PID.11.3^Myfaircity~@PID.11.4^GA <CR>

RCP|I|5^RD^HL70126|R^real-time^HL70394<CR>

Note that the intent of the Quantity Limited Request differs from its use in the Request Immunization History query. Here it means send me batches of 5 records until you have sent them all. In the Request Immunization History query it means return a list of up to five clients, but if you find more, then send me an error indicating too many records found.

Returning a list of candidate clients in response to PDQ query

The response to a PDQ query is very similar to that of a Request for Immunization History query which finds lower confidence matches. The most significant differences include:

- No NK1 is returned. MPIs implementing the Pediatric Demographics Option use Mother's Maiden name in the PID segment to provide equivalent value in patient record matching.
- If more than the maximum records are found they are returned in batches of up to the maximum records specified in the query
- Potential use of DSC segment to support return of batches of records

The following example shows a return similar to the response message returned by the request for immunization history query (above). Note that in both cases, the response message returns all information that it knows about each client in the segments required for each response.

MSH|^~\&|SOME_SYSTEM|A_Clinic|MYIIS|MyStateIIS|20091105||RSP^K22^ |37374859|P|2.5.1||||||||| <CR>

MSA|AA|793543<CR>

QAK|37374859|AA<CR>

QPD|^IHE PDQ Query^ |37374859|@PID.3^123456^^^MYEHR^MR~@PID.5^Child^Bobbie^Q^^^^L~PID.6^Que^Suzy^^^^^M~@PID.7^20050512 @PID.8^M~@PID.11^10 East Main St^^Myfaircity^GA^^^L~@PID.18^<CR>

PID|1||99445566^^^MYStateIIS^SR||Child^Robert^^^^^L||20050512|M<CR>

PID|2||123456^^^MYStateIIS^SR||Child^Robert^^^^^L||20050512|M<CR>

Using PIX in preparation for reporting an Immunization Record to an IIS

In the case where an IIS participates in an MPI, the EHR may use a PIX Query to retrieve the IIS identifier from the MPI prior to sending an immunization record to the IIS.

In the case where the IIS identifier is returned by the MPI, the VXU message sent to the IIS may contain the IIS ID

A user may believe that a candidate does exist and may choose to refine the query parameters and requery.

Receiving system determines that message has errors
HL7 Message Rule Errors
There are two classes of error related to HL7 message rules. The first is when a message is well formed, but the query has errors in content or format. The second occurs when the message is malformed and cannot be parsed by the recipient.

The following examples illustrate how each is reported.

Malformed Query:
Initiating Query:
MSH|^~\&|||||||QBP^Q11^QBP_Q11|793543|P|2.5.1||||||||Z34^CDCPHINVS. <CR>

QPD|Z34^Request Immunization History^HL70471||123456^^^MYEHR^MR|Child^Bobbie^Q^^^^L|Que^Suzy^^^^^M|20050512|M|10 East Main St^^Myfaircity^GA^^^L<CR>

Note that only the MSH and QPD segments will be displayed above. The QPD does not have data in a required field, the Query Tag field (QPD-2).

MSH|^~\&|MYIIS|MyStateIIS||MYEHR|20091130||RSP^K11^RSP_K11|7731029|P|2.5.1||||||||| <CR>

MSA|AE|7731029<CR>

ERR||QPD^1^2|101^required field missing^HL70357|E<CR>

QAK||AE|Z34^request Immunization history^HL70471<CR>

QPD|Z343^Request Immunization History^HL70471||123456^^^MYEHR^MR|Child^Bobbie^Q^^^^L|Que^Suzy^^^^^M|20050512|M|10 East Main St^^Myfaircity^GA^^^L<CR>

Note that QAK-1 Query tag is empty in this case, because it was missing in the initiating query.

Malformed message

When a malformed message is received, the response is an ACK with AR in the MSA-1 (Acknowledgement Code)

MSH|^~\&|MYIIS|MyStateIIS||MYEHR|20091130||ACK||P <CR>

MSA|AR|<CR>

This message indicates that the application rejected the message.

Receiving System Business Rule Errors

Fatal Error:

Date sent in a required field is not legitimate (February 30, 2009)

Non-fatal error:

No Match Is Found

If no match is found, then the receiving system sends a response that indicates that the message was accepted and found no data. Note that this might occur if one client was found, but does not want his/her data shared with a different provider.

```
MSH|^~\&|MYIIS|MyStateIIS||MYEHR|20091130||RSP^K11^RSP_K11|7731029|P|2.5.1||||||||||
MSA|AA|7731029<CR>

QAK|37374859|NF|Z343^request Immunization history^HL70471<CR>

QPD|Z34^Request Immunization
History^HL70471|37374859|123456^^^MYEHR^MR|Child^Bobbie^Q^^^^L|Que^Suzy^^^^^M|20050512|M|10 East Main
St^^Myfaircity^GA^^^L<CR
```